FORM NO. 92-0377 Rev. A

TORO®

MODEL NO. 41022-30001 & UP

OPERATOR'S, SET-UP & PARTS MANUAL

SPRAY GUN KIT
For the MULTI-PRO® and WORKMAN® Vehicles

To assure maximum safety, optimum performance, and to gain knowledge of the product, it is essential that you or any other operator of this equipment read and understand the contents of this manual before the vehicle engine is ever started. Pay particular attention to the SAFETY INSTRUCTIONS highlighted by this symbol—

⚠ The safety alert symbol means CAUTION, WARNING, or DANGER — personal safety instruction. Failure to comply with the instruction may result in personal injury.

⚠ SAFETY INSTRUCTIONS

It is very important that all persons operating this equipment have easy access to these instructions at all times.

RECOGNIZE SAFETY INFORMATION

⚠ This safety-alert symbol calls attention to a **dangerous** situation, which could result in serious injury or death to the operator or a bystander.

Safety, mechanical and some general information in this manual are emphasized. **DANGER, WARNING** and **CAUTION** identify safety messages. Whenever the triangular safety symbol appears, it is followed by a safety message that must be read and understood. For more details concerning safety, read the Safety Instructions that follow. **IMPORTANT** identifies special mechanical information and **NOTE** identifies general information worthy of special attention.

These instructions are provided as a guide for the safe operation and maintenance of this equipment. However, the operator's personal safety, as well as those persons in the work area, will depend on the careful actions and good judgement of the operator.
To reduce the potential for injury or death, comply with the following safety instructions.

BEFORE OPERATING:

1. Operate this attachment only after reading and understanding the contents of this manual. A replacement manual is available by sending complete model and serial number to: Hahn, Equipment Co., A Subsidiary of The TORO Company 1625 N. Garvin, Evansville, IN. 47711.

2. Learn how to operate the Spray Gun Kit and how to use the controls properly. DO NOT let anyone operate this equipment without first receiving thorough instructions.

3. Chemicals can injure persons, animals, plants, soils or other property. To eliminate environmental damage and personal injury:

A. Obtain proper training before using or handling chemicals.

B. Select the proper chemical for the job.

C. Follow manufacturer's instructions on chemical container labels. Apply and handle chemicals as recommended.

D. Handle and apply chemicals with care. Wear goggles and other necessary protective equipment. Handle chemicals in well ventilated areas. Never smoke while handling chemicals.

E. Properly dispose of chemical container and unused chemicals.

4. **DO NOT** aim gun at any person or any animal. Fluids under high pressure can penetrate the human skin and can cause severe injury, possibly resulting in amputation or death. Hot liquids and chemicals can also cause burns or injury. If any part of the body comes in contact with the spray stream, immediately consult a physician.

5. **DO NOT** at any time place hand or any other part of the body in front of spray nozzle or tip.

©The TORO Company - 1996
All Rights Reserved

SAFETY INSTRUCTIONS

6. **DO NOT** leave equipment under pressure unattended at any time. Relieve line pressure by shutting off power to pump, turning off the liquid supply to the pump, and actuating trigger until all fluid ceases to flow; then position trigger lock to the "locked off" position.

7. **DO NOT** leave spray gun with trigger in the "locked on" position after the pump has been turned off.

8. **DO NOT** use damaged, perforated, or weakened fluid hose.

9. **DO NOT** use a spray gun with a damaged trigger lock.

10. **DO NOT** operate a spray gun if there are any leaks from the packing, fitting, hoses, etc. Fluids which are under high pressure can penetrate skin, clothing, etc. and cause serious injury.

11. **DO NOT** spray near power lines, since contact could result in severe electrical shock.

12. **DO NOT** handle a spray gun *without* a tip or nozzle any differently than one *with* a tip or nozzle. Even with the tip or nozzle removed, the spray gun can discharge a large volume of liquid at a high velocity.

13. To be sure of optimum performance and safety, always purchase genuine TORO replacement parts and accessories. Replacement parts and accessories made by other manufacturers could be dangerous. Altering the Spray Gun in any manner may affect the Spray Gun's operation, performance, durability or its use may result in injury or death. Such use could void the product warranty of the Toro Company.

14. This accessory should not be modified without the Toro Company's authorization. Direct any inquiries to:

Hahn Equipment Co.
A subsidiary of The Toro Company
1625 N. Garvin
Evansville, IN 47711-4596

OPERATION

⚠ WARNING

Fluids under high pressure can penetrate skin and can cause severe injury, possibly resulting in amputation or death. Hot liquids and chemicals can also cause burns or injury.

- **Disengage the Spray Pump (using the Pump Switch) to remove pressure before proceeding to step 1.**
- **DO NOT at any time place hand or any other part of the body in front of spray nozzle or tip.**
- **DO NOT aim gun at any person or any animal.**
- **If any part of the body comes in contact with the spray stream, immediately consult a physician.**

1. Make sure pump is in the disengaged position and there is no pressure in any part of the system. Examine all connections, making sure they are of the proper type and are secure.

2. Before engaging the pump and holding the gun in downward vertical position pointed away from body, familiarize yourself with the operation of the trigger lock.

3. Make sure trigger lock is in "locked off" position. Do not turn on the pump or operate spray gun if trigger lock is not operating properly.

4. If spraying in cold weather, be sure to protect the gun from freezing.

5. Operation of this spray gun in windy conditions will cause premature breakup of liquid stream.

6. Flush gun after each spray period, using the same safety precautions as used during spraying operations. Always use the lowest possible pressure for flushing.

7. Wear rubber gloves and a full body protective suit, including safety glasses, when operating the spray gun.

SET-UP INSTRUCTIONS

"Right" and "Left" as used in the following instructions, refer to the operator's right and left when seated in the normal operating position. Likewise, "Front" and "Rear" as seen from the operator's position.

1. Remove the rubber protective cap from the carriage bolt which protrudes from the left rear Tank Band. See FIG. 1.

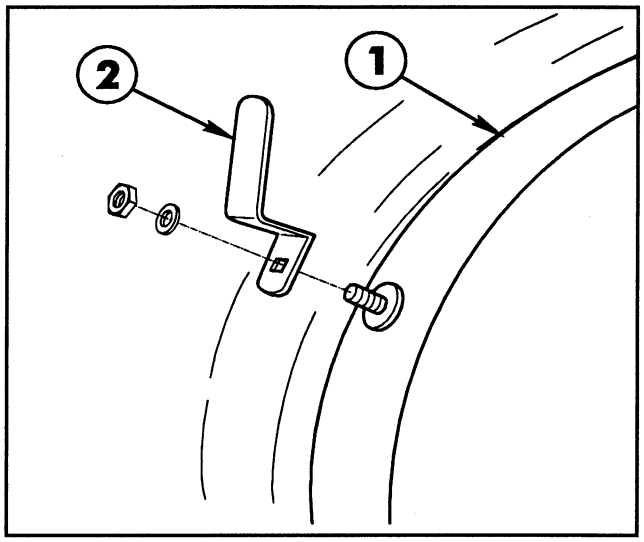

FIG. 1

1. Left Rear Tank Band 2. Hose Hook

2. Attach the Hose Hook to the bolt and secure it with the 5/16" hex nut and a flat washer.

3. Close the Suction Line Valve and remove Accessory Plug from the Tee in the pressure line .

4. Apply thread sealer and install the Reducer Bushing and Close Nipple into the St. Elbow. Screw the St. Elbow into the Accessory port as shown below. Install the Ball Valve and hose barb as shown.

Note: The St. Elbow is not used on the Workman® 3000 or Multi-Pro® 5500.

5. Open the Valve in the Suction Line.

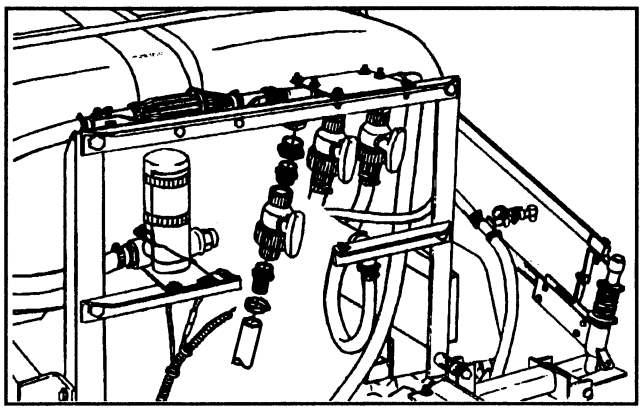

WORKMAN® 3000

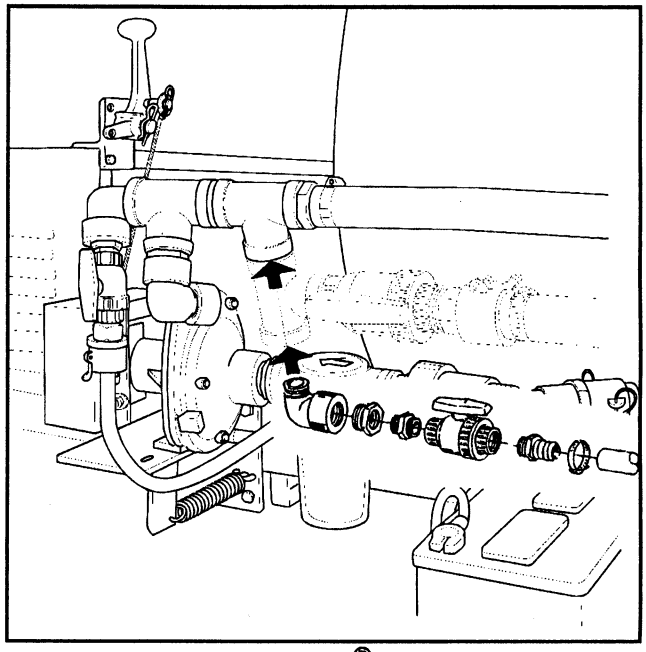

MULTI-PRO® 1100

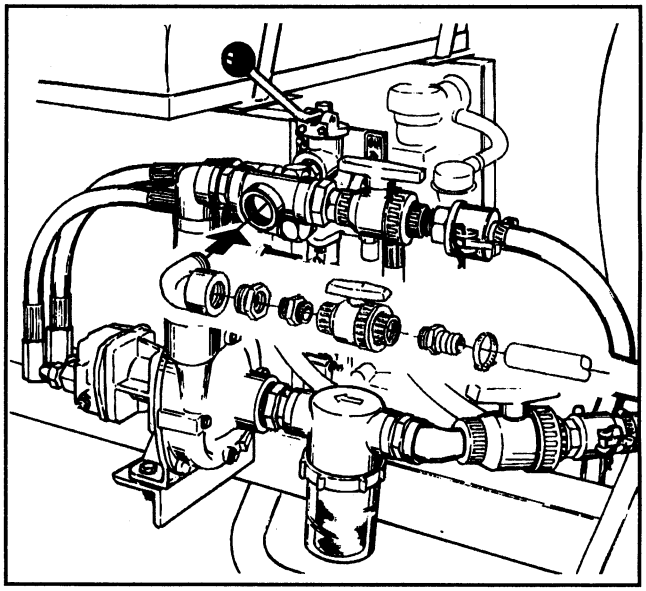

MULTI-PRO® 5200

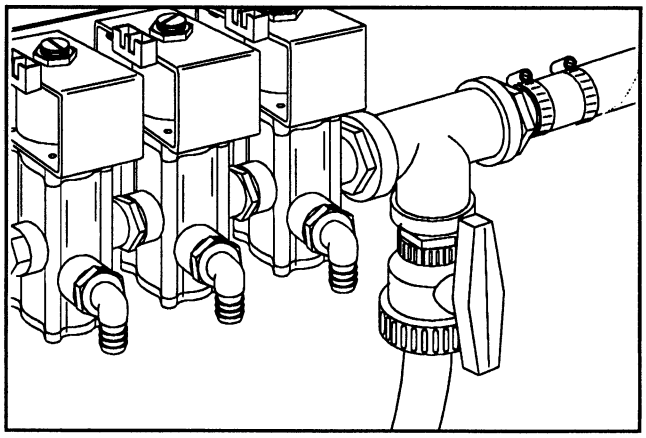

MULTI-PRO® 5500

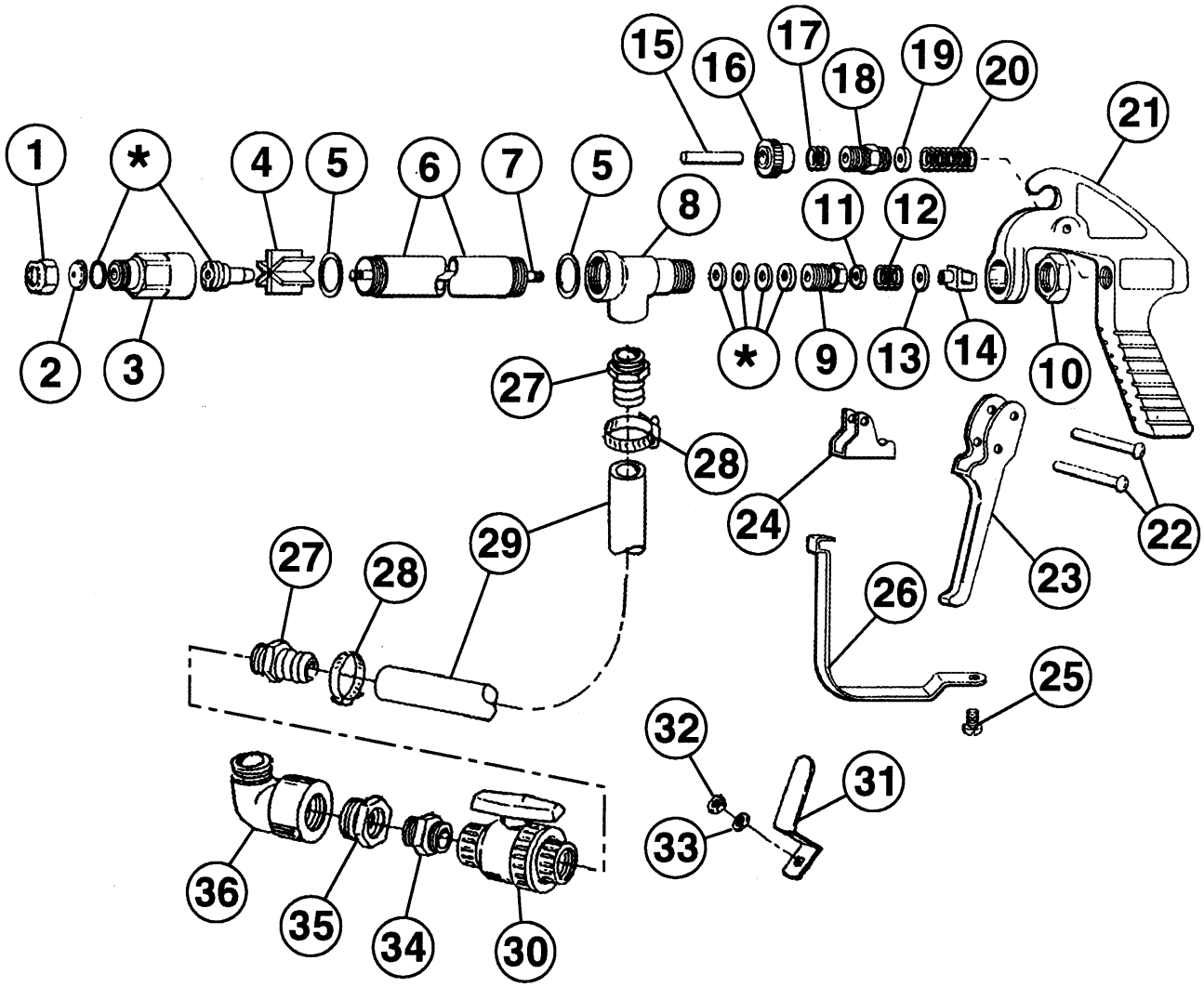

SPRAY GUN KIT 41022

Ref	Part No.	Description	Qty
1	93-6240	Cap, Aluminum	1
2	93-6265	Orifice Disc, Hardened St. Steel	1
3	93-6241	Nozzle Housing, Aluminum	1
4	93-6242	Guide Vane, Aluminum	1
5	93-6243	Gasket, Aluminum	2
6	93-6245	Tubing, Aluminum	1
7	93-6244	Stem, Type 416 Stainless Steel	1
8	93-6246	Inlet Body, Aluminum	1
9	93-6247	Packing Screw, Aluminum	1
10	93-6248	Locknut, Steel-Zinc Plated	1
11	93-6249	Stem Nut, Steel-Nickel Plated	1
12	93-6250	Trigger Stop Spring, St. Steel	1
13	93-6251	Washer, Steel-Zinc Plated	1
14	93-6252	Trigger Guide, Steel-Nickel Plated	1
15	93-6253	Spring Stud, Stainless Steel	1
16	93-6254	Stop Adj. Nut, Steel-Zinc Plated	1
17	93-6255	Spring for Stop Adj. Nut, St. Steel	1
18	93-6256	Spring Screw, Steel-Zinc Plated	1

Ref	Part No.	Description	Qty
19	93-6257	Spring Guide Washer, St. Steel	1
20	93-6258	Main Spring, Stainless Steel	1
21	93-6259	Handle Body, Aluminum	1
22	93-6260	Rivet, Steel-Zinc Plated	2
23	93-6261	Trigger, Steel-Nickel Plated	1
24	93-6262	Trigger Stop, Steel-Nickel Plated	1
25	93-6263	Screw, Steel-Nickel Plated	1
26	93-6264	Trigger Guard, Steel-Nickel Plated	1
27	92538	Hose Barb, 1/2" MPT x 1/2" ID Hose	2
28	96609	Hose Clamp	2
29	40312	Hose, 1/2" ID x 25 Ft.	1
30	40192	Ball Valve, 1/2" NPT	1
31	40153	Hose Hook	1
32	22-12-AJD	Hex Nut 5/16" NC	1
33	24-10-AD	Flat Washer, 5/16"	1
34	41314	Close Nipple, 1/2" NPT	1
35	41306	Reducer Nipple, 1" x 1/2" FPT	1
36	41307	90° St. Elbow, 1" NPT	1

Seal Kit (Includes all items marked with *) Order Part No. 92-0496

Spray Gun Assembly (Includes Ref. # 1-26) Order Part No. 40311

MAINTENANCE

⚠ WARNING

Fluids under high pressure can penetrate skin and can cause severe injury, possibly resulting in amputation or death. Hot liquids and chemicals can also cause burns or injury.

- **Disengage the Spray Pump (using the Pump Switch) to remove pressure before proceeding to step 1.**
- **DO NOT at any time place hand or any other part of the body in front of spray nozzle or tip.**
- **DO NOT aim gun at any person or any animal.**
- **If any part of the body comes in contact with the spray stream, immediately consult a physician.**

With proper care your Spray Gun will give you reliable service. To maintain this performance, parts should be regularly replaced when necessary.

DISASSEMBLY PROCEDURE:

1. Before servicing or making any adjustments to the Sprayer:

A. Stop the Vehicle and set the parking brake.

B. Shut off the vehicle's engine and remove key from ignition.

C. Disengage all power and wait until all moving parts have stopped.

If it becomes necessary to disassemble this unit, flush spray gun, detach from supply hose and follow these steps:

2. Use an adjustable wrench to hold the flats of the inlet body and another wrench on the hex of the nozzle housing to unscrew assembly. Either nozzle housing or tubing will unscrew.

3. Lock trigger in open position using trigger stop.

4. Unscrew lock nut and slide inlet body out of handle body.

5. Loosen screw, disengage upper end of trigger guard and swing trigger guard to side.

6. Squeeze trigger to disengage trigger stop and allow trigger to swing backward against handle body.

7. Disengage trigger guide from lower rivet and remove inlet body and stem assembly from the handle assembly.

8. Using a wrench on the trigger guide and another wrench on the flats of the stem, unscrew trigger guide. Remove trigger spring, washer and stem nut.

9. Withdraw stem from inlet body.

10. Using a wrench on the flats of the stem and another wrench on the flats of the seat plug, unscrew seat plug and discard.

11. Remove packing screw from inlet body.

12. Remove and discard the three pieces of packing and packing washer. Use care to avoid damaging the internal threads on the inlet body.

13. If desired, stop adjustment nut can be unscrewed until the hex on the spring screw is exposed to allow for removal of items.

14. Clean and inspect all parts. Replace worn or damaged parts.

ASSEMBLY PROCEDURE:

1. If previously disassembled, install spring on spring screw. Screw stop adjustment nut on spring screw with the small diameter end facing the hex until the large diameter end of the stop adjustment nut is flush with the end of the spring screw.

2. Slide spring stud in spring screw.

3. Install main spring and spring guide washer followed by spring screw assembly into handle body. Tighten spring screw with wrench. (Stop adjustment nut may be backed off to allow more wrench clearance.) After tightening spring screw, tighten stop adjustment nut to allow for full trigger movement.

4. Install guide vane and new seat plug on stem. Tighten securely using wrenches on flats of stem and seat plug.

5. Install new gasket in inlet body and slide inlet body onto stem with large diameter end toward seat plug. Slide new packing washer, three pieces of new packings followed by the threaded end of packing screw on stem.

MAINTENANCE

6. While holding packing screw carefully screw inlet body over packings to engage threads on packing screw. Tighten finger tight only.

7. Tighten stem nut fully on stem with undercut side of stem nut facing away from inlet body.

8. Install new washer on new trigger guide followed by new trigger stop spring. Thread trigger guide on stem until end of stem is flush with the inner edge of trigger guide then back off two turns and use wrench to tighten against stem nut.

NOTE: Trigger stop spring should fit neatly inside of undercut on stem nut. If not, then stem nut was installed backwards.

9. Position non-beveled side of lock nut against handle body between trigger and handle body and swing trigger forward against lock nut.

10. With open end of trigger guide pointing toward top of handle body, hook trigger guide on lower rivet. Pull back partially on trigger and place trigger guard in slot on handle body.

11. Slide inlet body into handle body and secure with lock nut.

12. Install tubing, new gasket and nozzle housing. Tighten securely using wrenches on flats on inlet body and hex on nozzle housing.

13. The trigger should appear to be vertical with the gun held horizontally. If desired, additional adjustment of stroke can be made by locking the trigger open, backing off stem nut slightly and using a needle nose pliers on the flats of the stem to rotate stem. Lock stem nut. Stroke can be shortened as well as lengthened for final adjustment but if stop adjustment screw disengages from spring screw, stroke must be shortened.

14. Install gun in system and carefully check for leaks by starting at low pressures. Additional tightening of packing screw may be required if leaks at packings are found. Tighten only enough to stop leakage.

15. Make sure trigger lock is in "locked off" position. Do not turn on the pump power or operate spray gun if trigger lock is not operating properly.

STORAGE:

Flush and drain all liquid from the gun, lubricate and store in a safe, dry place.

PRODUCT CHANGES

In an effort to make improvements available to TORO owners as quickly as possible, minor changes are incorporated into Toro's Products from time to time that do not become immediately shown in the Parts Catalog. If such a change has been made in your unit which is not reflected in your manual, see your TORO distributor or his Authorized TORO Service Dealer for information and part numbers.

IDENTIFICATION AND ORDERING

MODEL AND SERIAL NUMBERS:

All TORO products have identification numbers; a model number and sometimes a serial number. In any correspondence concerning the unit, supply the model number and, if available, serial numbers to ensure correct information and replacement parts are obtained.

To order replacement parts from an Authorized TORO Service Dealer, supply the following information:
1. Model and serial number of your Vehicle.
2. Part number, description, and the quantity of part(s) desired.

NOTE: Do not order by reference number if a parts catalog is being used; Use the PART NUMBER.

TORO®

Helping you put quality into play.™

The Toro Promise
A One Year Limited Warranty

The Toro Company promises to repair your Model 41022 Spray Gun Kit if defective in materials or workmanship. The following time periods from the date of purchase apply special warranty terms, on certain components, may be offered through The Toro Company by the component manufacturers:

Commercial Products.....1 Year

The cost of parts, labor and transportation are included.

If you feel your TORO Product is defective and wish to rely on The Toro Promise, the following procedure is recommended:

1. Contact your Authorized TORO Distributor or Commercial Dealer (the Yellow Pages of your telephone directory is a good reference source).

2. The TORO Distributor or Commercial Dealer will advise you on the arrangements that can be made to inspect and repair your product.

3. The TORO Distributor or Commercial Dealer will inspect the product and advise you whether the product is defective and, if so, make all repairs necessary to correct the defect without an extra charge to you.

If for any reason you are dissatisfied with the distributor's analysis of the defect or the service performed, you may contact us.

Write:

TORO Commercial Products Service Department
8111 Lyndale Avenue South
Bloomington, MN 55420-1196

The above remedy of product defects through repair by an Authorized TORO Distributor or Commercial Dealer is the purchaser's sole remedy for any defect.

THERE IS NO OTHER EXPRESS WARRANTY. ALL IMPLIED WARRANTIES OF MERCHANTABILITY AND FITNESS FOR USE ARE LIMITED TO THE DURATION OF THE EXPRESS WARRANTY.

Some states do not allow limitations on how long an implied warranty lasts, so the above limitation may not apply to you.

This Warranty applies only to parts or components which are defective and does not cover repairs necessary due to normal wear, misuse, accidents, or lack of proper maintenance. Regular, routine maintenance of the unit to keep it in proper operating condition is the responsibility of the owner.

All warranty repairs reimbursable under The Toro Promise must be performed by an Authorized Toro Commercial Dealer or Distributor using Toro approved replacement parts.

Repairs or attempted repairs by anyone other than an Authorized TORO Distributor or Commercial Dealer are not reimbursable under The TORO Promise. In addition, these unauthorized repair attempts may result in additional malfunctions, the correction of which is not covered by warranty.

THE TORO COMPANY IS NOT LIABLE FOR INDIRECT, INCIDENTAL OR CONSEQUENTIAL DAMAGES IN CONNECTION WITH THE USE OF THE PRODUCT INCLUDING ANY COST OR EXPENSE OF PROVIDING SUBSTITUTE EQUIPMENT OR SERVICE DURING PERIODS OF MALFUNCTION OR NON-USE.

Some states do not allow the exclusion of incidental or consequential damages, so the above exclusion may not apply to you.

This warranty gives you specific legal rights, and you may also have other rights which vary from state to state.

COUNTRIES OTHER THAN THE UNITED STATES OR CANADA

Customers who have purchased TORO products exported from the United States or Canada should contact their TORO Distributor (Dealer) to obtain guarantee policies for your country, province, or state. If for any reason you are dissatisfied with your Distributor's service or have difficulty obtaining guarantee information, contact the TORO importer. If all other remedies fail, you may contact us at The Toro Company.

Compliance with Radio Interference Regulations Certified.