FORM NO. 92-0381

TORO

MODEL NO. 41030 - 30001 & Up

SET-UP AND PARTS LIST

ELECTRIC BOOM LIFT KIT

Refer to the illustrated Parts List for the details of parts used in assembling the Electric Boom Lift Kit.

NOTE: "Right", "Left", "Front" and "Rear" are referenced while seated in the operator's position.

1. If the Struts have been installed, (for use with a Manual Boom Frame) disassemble them and use the clevis pins and hair pin cotters to install the Electric Actuators as shown in FIG. 1.

2. Connect the harness connectors to the Switches as shown in the diagram on page 2. Install the Switches in the holes in the Seat Support, using the nuts included with the Switches. Install the protective rubber Boots. Apply the "UP/DOWN" Decal between the Switches as shown in FIG. 2 or FIG. 3.

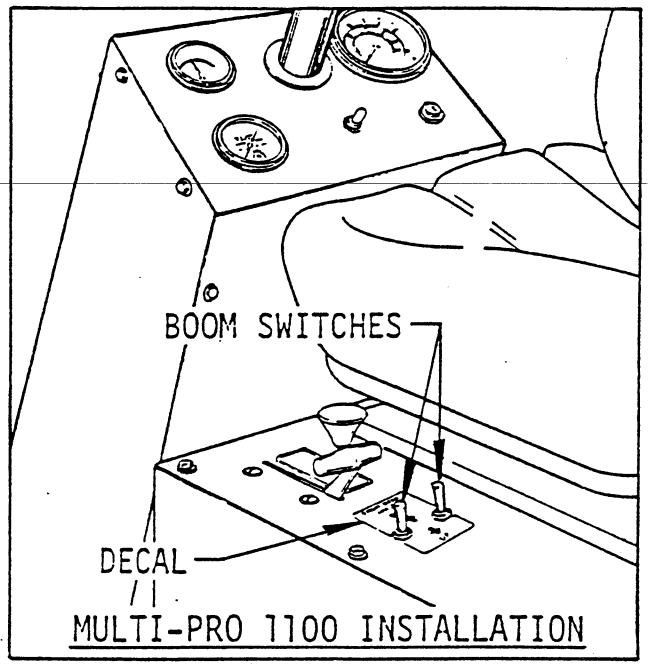

FIG. 2

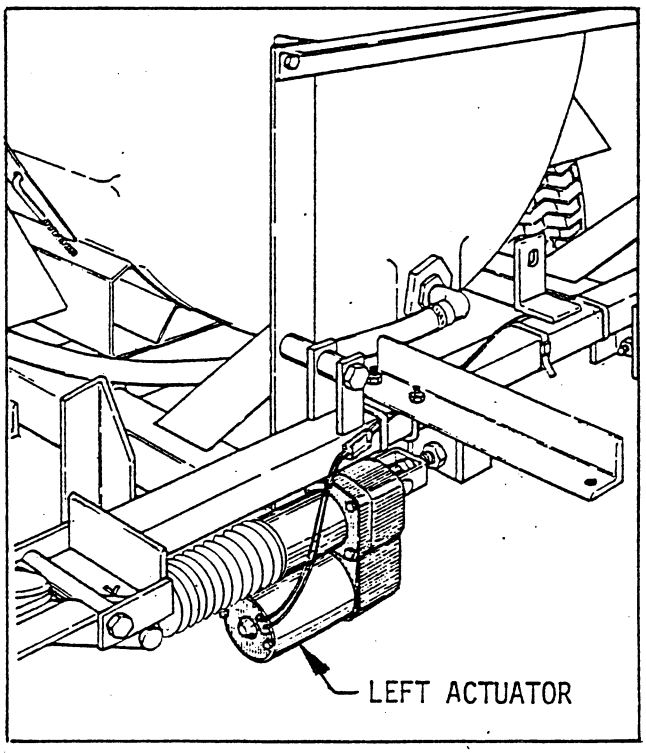

FIG. 1

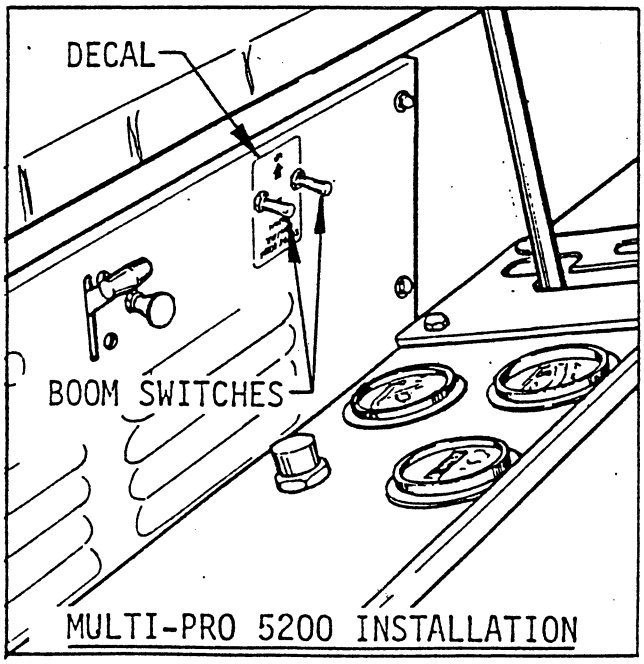

FIG. 3

©The Toro Company-1993

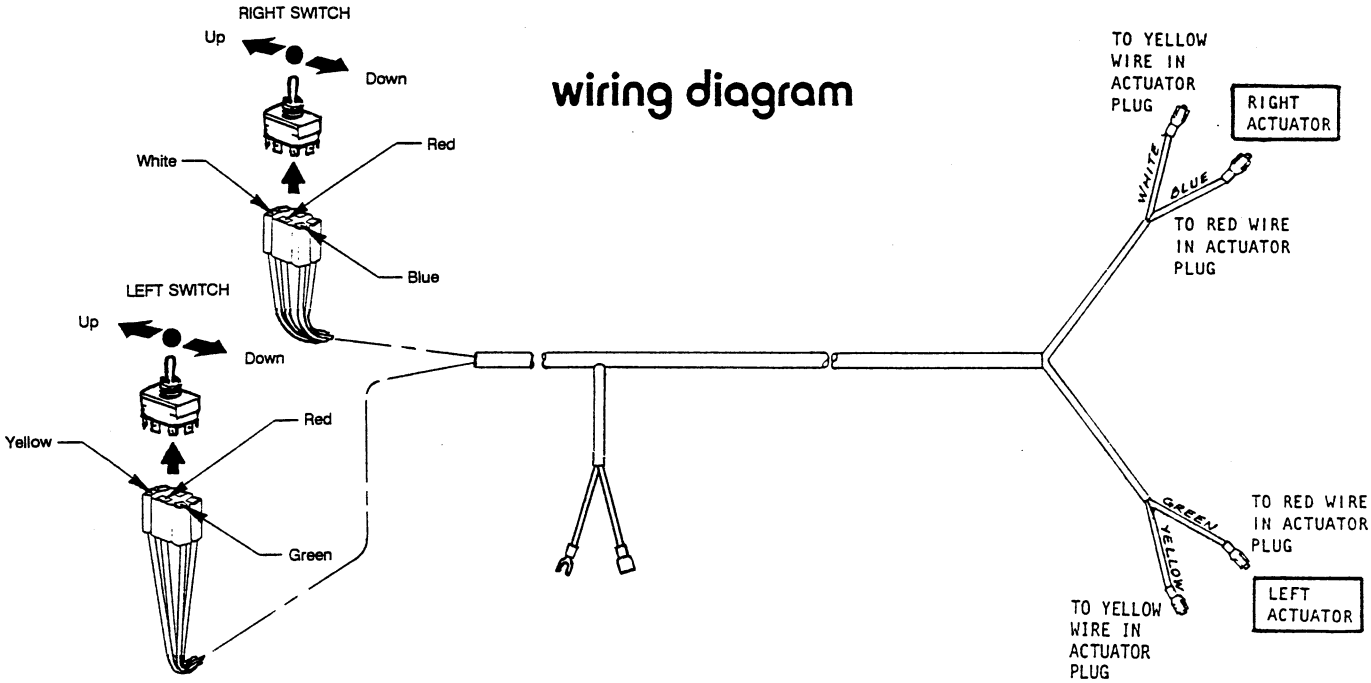

3. Run the Wire Harness along the left side of the Vehicle's Main Frame.

4. Ground the spade terminal on the black wire to the Ground Terminal Block. See FIG. 4.

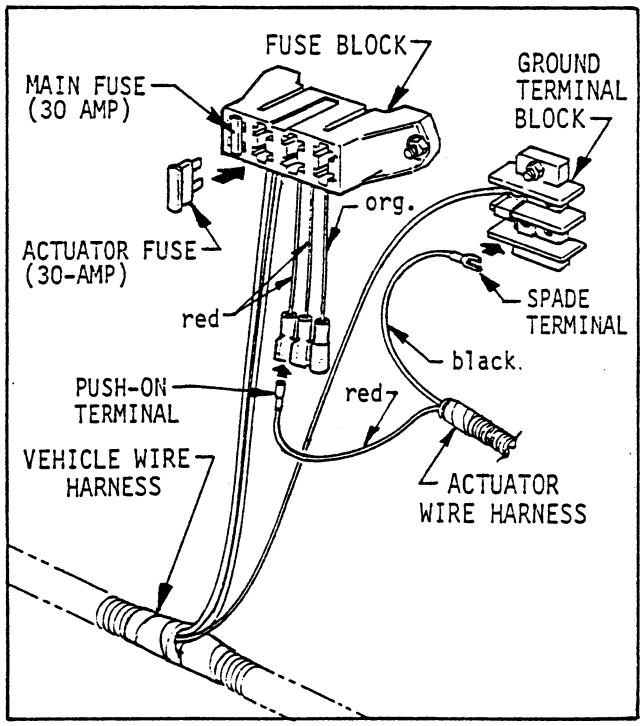

FIG. 4

5. Connect the push-on terminal on the red wire to the male terminal on the red wire coming from the Fuse Block. See FIG. 4.

6. Make a trial connection by plugging single terminals into the Actuator plug, to check the up and down motion and the right and left control.

7. If all connections are correct, use the plastic Connector for final connection.

NOTE: Apply silicone at joint and on the back side of plug where wires enter the plug.

8. Secure the Wire Harness with plastic cable ties, to the Boom and Vehicle Frame.

IMPORTANT: Cover or otherwise protect the Electric Actuators when using a high pressure hose washer. Water entering the Actuator will cause SERIOUS DAMAGE and premature failure of the unit!

ELECTRIC BOOM LIFT KIT

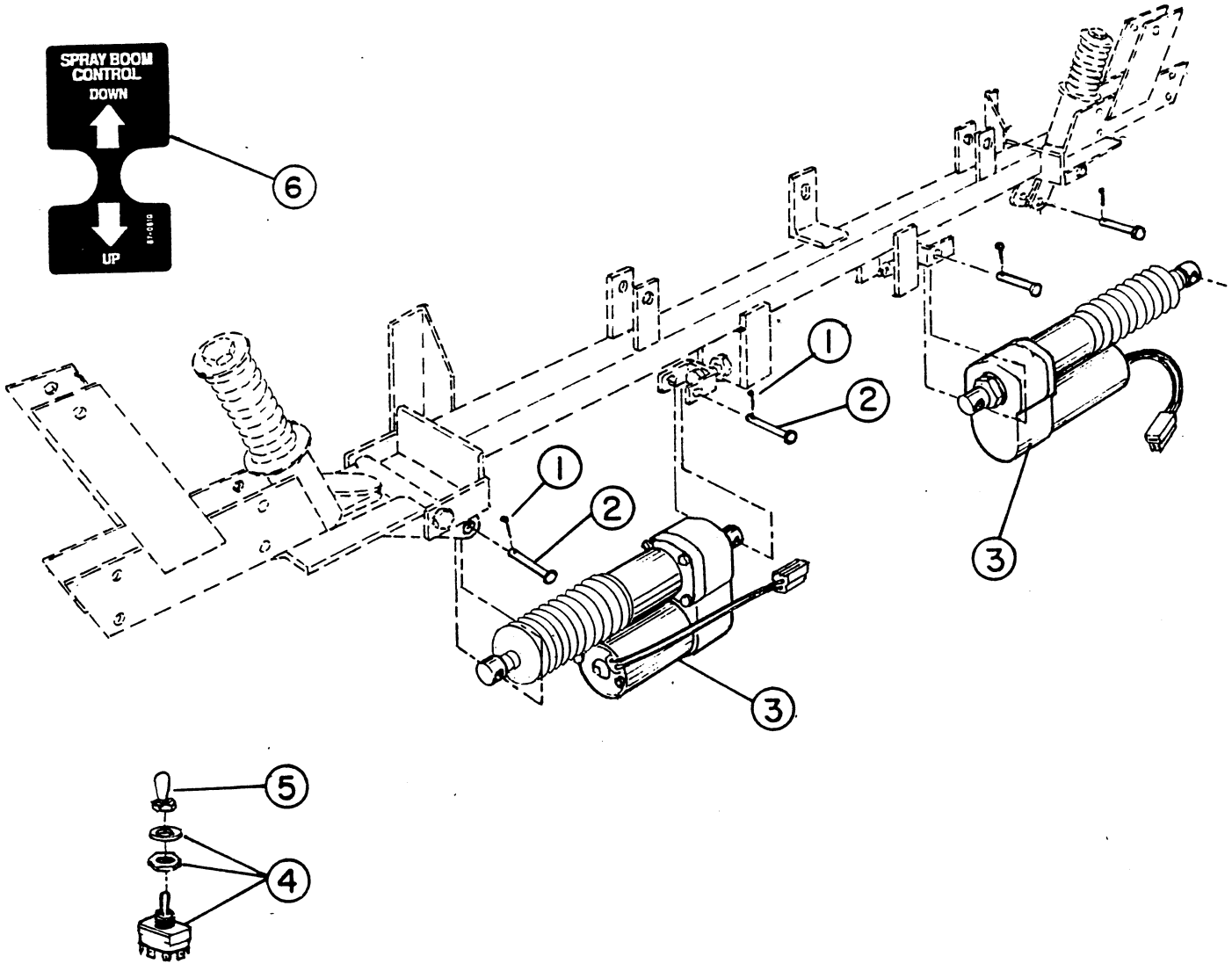

REF	PART NO.	DESCRIPTION	QTY
1	28-28-D	Hair Pin Cotter, 1/8 x 1" (f/w Boom Frame)	4
2	42195	Clevis Pin, 1/2 x 2" (f/w Boom Frame)	4
3	92-3757	Actuator Assembly	2
4	30954	Switch	2
5	30955	Rubber Boot	2
6	87-0610	Decal	1
*	43063	Wire Harness Assembly	1
*	42765	30-amp Fuse	1
*	95672	Plastic Sta-Strap	4

* Indicates parts furnished, but not shown.

92-3757 ACTUATOR

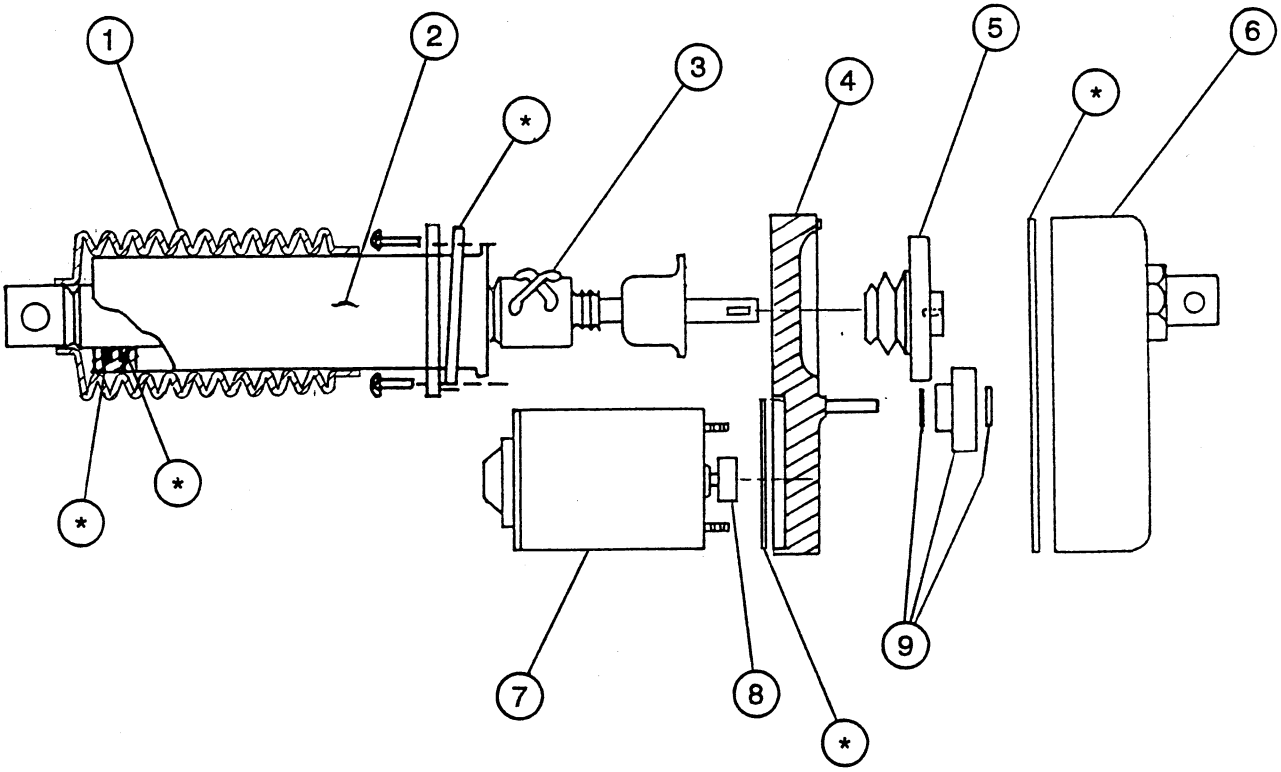

REF	PART NO.	DESCRIPTION	QTY
1	92-3854	Boot Kit (Includes clamps)	1
2	92-3850	Cover Tube	1
3	92-3853	Drive Screw Assembly	1
4	42850	Front Housing	1
5	92-3852	Clutch Assembly	1
6	92-3851	Rear Housing	1
7	42849	Motor	1
8	42852	Motor Pinion Gear	1
9	42846	Intermediate Gear	1
*	42851	Sealing Kit	AR