FORM NO. 92-0412

TORO

MODEL NO. 41560-30101 & UP

SET-UP AND PARTS LIST

CARGO BED
FOR USE ON THE MULTI-PRO 5200 VEHICLE

Refer to the illustrated Parts List for the details of parts used in assembling the Cargo Bed and Hydraulics.

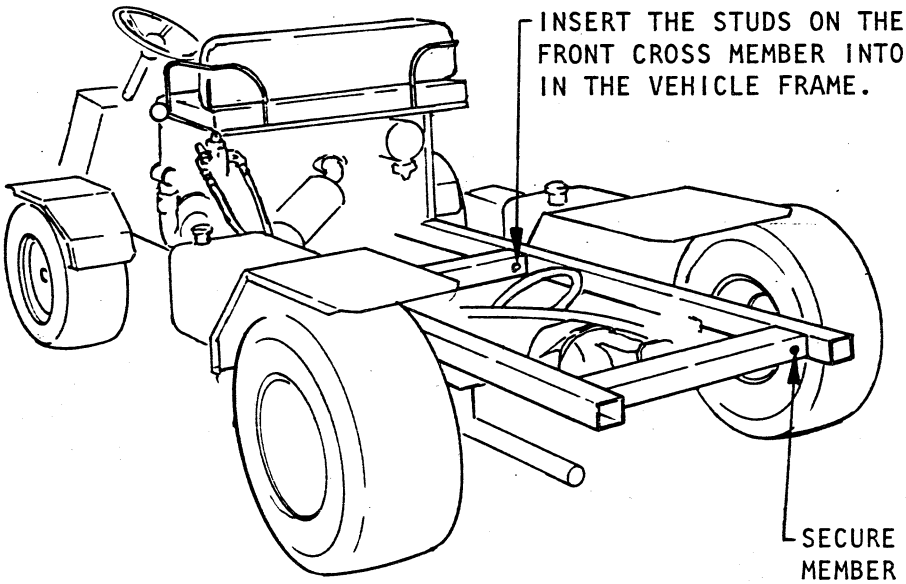

SAFETY AND INSTRUCTION DECALS

The following decals are installed on the machine. If any become damaged or illegible, replace it. The decal part number is listed below.

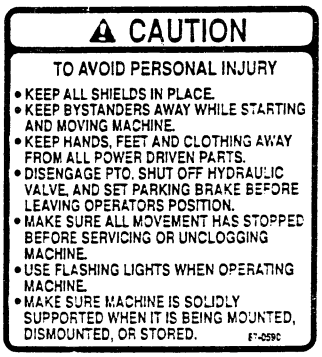

#87-0590 Located on right-front of Cargo Bed.



#87-0460 Located one on left-front of Cargo Bed and one on Tailgate.

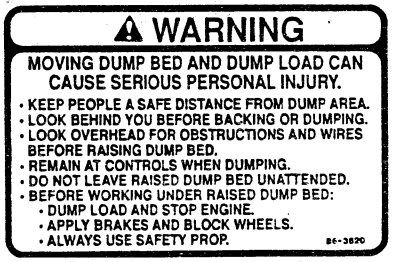

#86-3620 Located one on left side of Cargo Bed and one on Tailgate.

©The Toro Company-1993

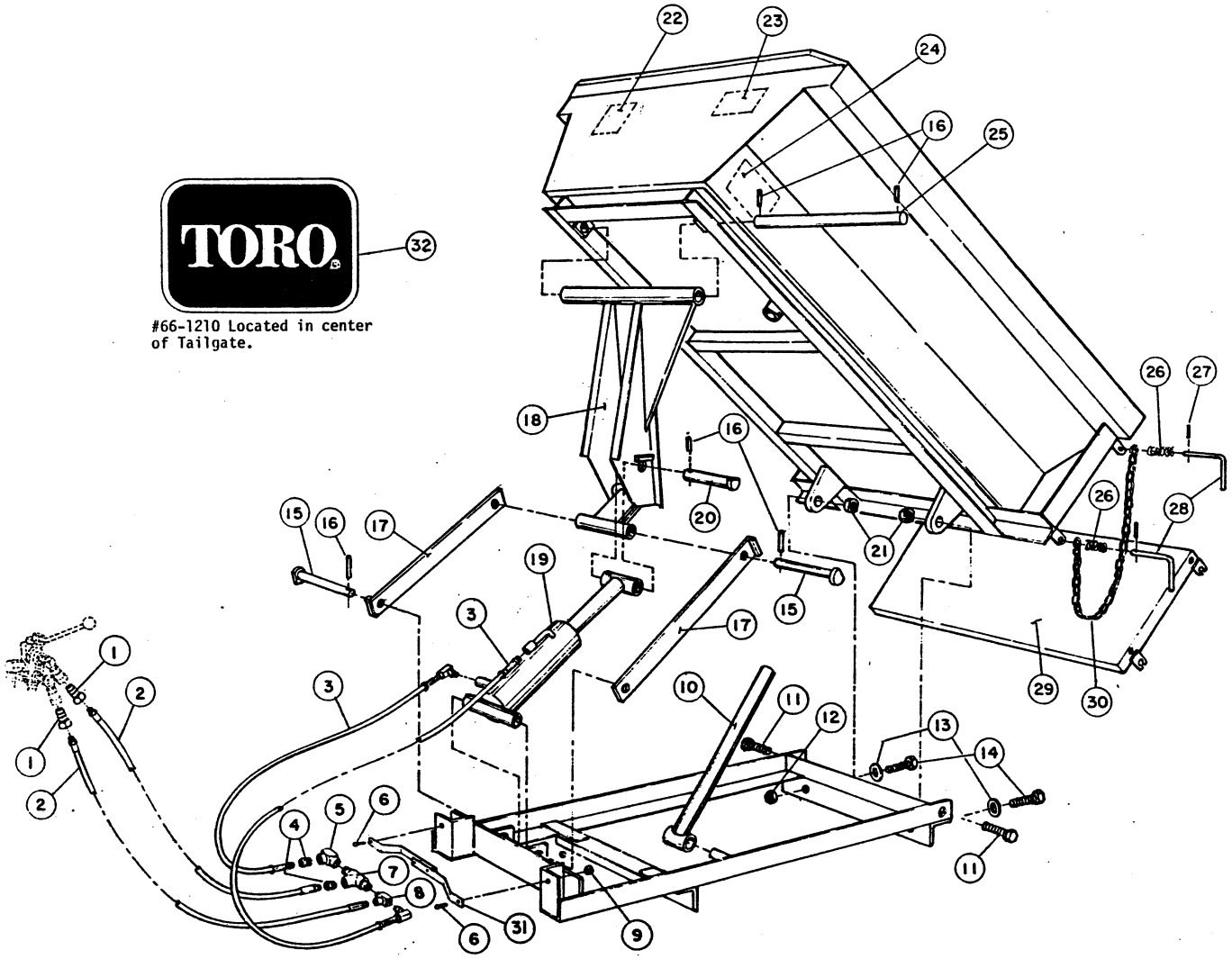

#66-1210 Located in center of Tailgate.

CARGO BED

MODEL NO. 41560-30101 & UP

REF	PART NO.	DESCRIPTION	QTY
1	41790	Hydraulic Qwik Coupler-Male	2
2	42362	Hydraulic Hose Assy	2
3	42695	Hydraulic Hose Assy	2
4	92-0073	Hydraulic Bushing 1/2 MPT x 1/4 FPT	2
5	42697	Hydraulic 90 Elbow, 1/2	1
6	20-5-AD	HHCS, 1/4 NC x 1"	1
7	42694	Pilot Check Valve	1
8	42696	Hydraulic Tee, 1/4 NPT - Male Run	1
9	22-11-AJD	Hex Nut, 1/4 NC	1
10	42379	Safety Support	1
11	42385	Hinge Bolt	2
12	22-17-AJD	Hex Nut, 5/8 NC	2
13	24-15-AD	Flat Washer, 5/8	2
14	20-121-AGD	HHCS, 5/8 NC x 1 1/2	2
15	42376	Cylinder Base Pin	2
16	29-199-C	Roll Pin	5
17	42377	Support Link	2
18	42375	Linkage Arm	1
19	42378	Hydraulic Cylinder Assy	1
20	42380	Cylinder Cross Pin	1
21	22-17-AJFD	Hinge Lock Nut, 5/8 NC	2
22	87-0590	Decal - "Avoid Serious Injury"	2
23	87-0460	Decal - "Maximum Load Limit"	2
24	86-3620	Decal - "Moving Dump Bed"	1
25	42374	Lift Cross Pin	1
26	42382	Spring	4
27	42381	Roll Pin	4
28	42383	Handle	4
29	42386	Tail Gate	1
30	42384	Chain	2
31	42832	Manifold Strap	1
32	66-1210	Decal - "Toro"	1

MAINTENANCE RECORD

Date								