FORM NO. 92-0414

TORO®

MODEL NO. 41570-30101 & UP

SET-UP AND PARTS LIST

TOP DRESSER
FOR USE ON THE MULTI-PRO 5200 VEHICLE

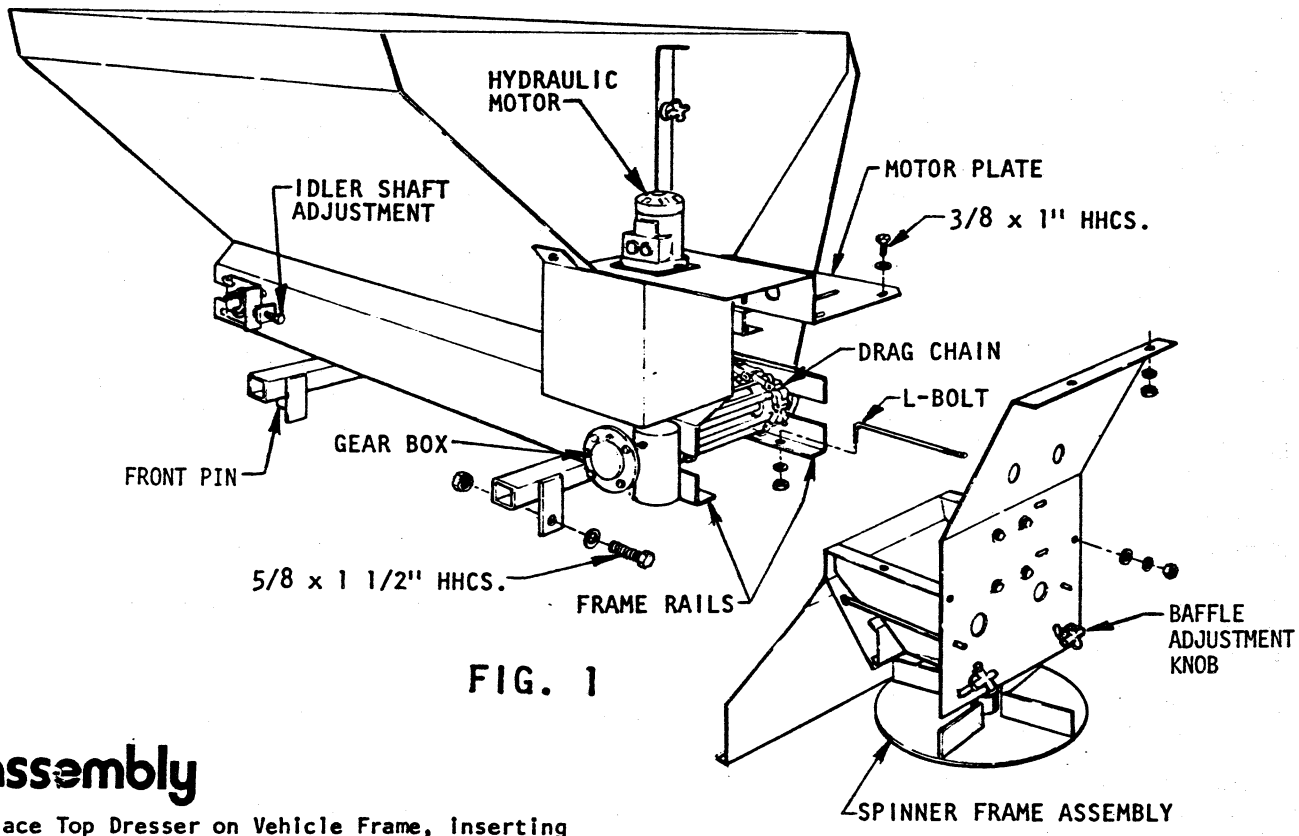

FIG. 1

assembly

Place Top Dresser on Vehicle Frame, inserting the front pins through the holes in the Frame cross member and securing at the rear with two 5/8 x 1-1/2" screws, flat washers and hex nuts.

Slide the Spinner Frame Assembly into the rear frame rails as shown in FIG. 1.

Bolt the Spinner Frame to the frame rails using the two "L" bolts, 5/16" hex nuts, flat washers and lock washers from the hardware bag. Make sure that the long leg of the "L" bolt passes through and is secured to the Spinner back plate and the short leg passes through and is secured to the frame rails with 3/8" flat washers and hex nuts.

Secure the top flange of the Spinner back plate to the motor plate with two 3/8" x 1" bolts, flat washers, lock washers and hex nuts.

Install the Roller Chain between the Gear Box Sprocket and the Spinner Sprocket. See FIG. 2.

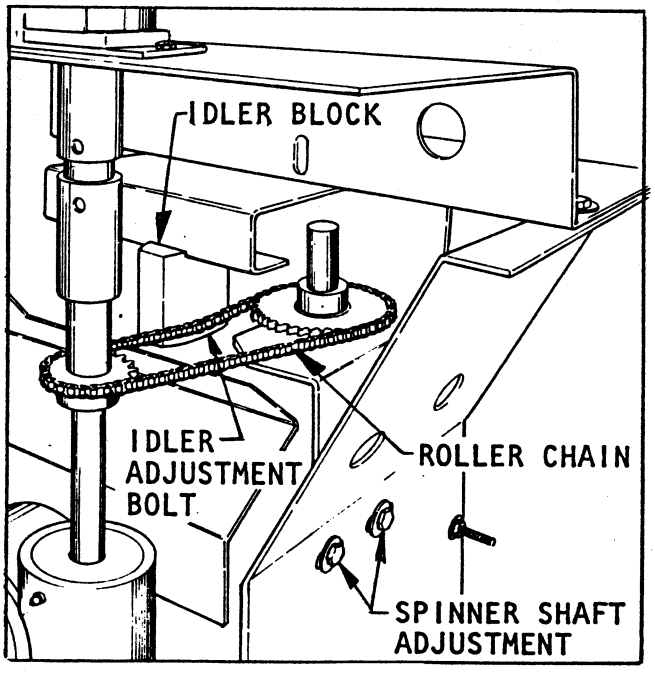

©The Toro Company-1993

FIG. 2

assembly cont.

CHAIN TENSION: A Chain that is too loose will "climb" on the Sprocket teeth, slap and run noisily. A chain that is too tight will cause excessive bearing loads with resulting heat build-up and wear.

- MAKE SURE THE SPINNER SHAFT IS STRAIGHT UP AND DOWN AND TURNS FREELY. tighten bolts securely.

- MAKE SURE THE SPROCKETS ARE IN LINE WITH ONE ANOTHER. Use a straight edge to check the Sprocket alignment. Correct any mis-alignment by loosening the set screw in the Sprocket on the Gear Box Shaft and raising the Sprocket to be in alignment with the Spinner Sprocket.

Chain tension is adjusted by loosening the bolt at the bottom of the Idler Block and sliding the Idler forward or backward to increase or decrease the tension on the Chain. When Idler Block is just "snug" against the Chain, re-tighten the bolt, securely.

HAVE A CLEAN AREA TO WORK IN AND BE VERY CAREFUL TO PREVENT ANY CONTAMINANTS FROM ENTERING THE HYDRAULIC SYSTEM.

Apply thread sealer and attach a Qwik-Coupler on one end of each of the two Hydraulic Hoses.

Apply thread sealer and install the male fittings on the other end of the Hoses into the ports in the Hydraulic Motor.

NOTE: Hydraulic components must be kept as clean as possible during assembly operations.

A pipe joint sealant, compatible with hydraulic oil must be applied to all threaded fittings. Teflon tape is not recommended.

Connect the Hydraulic Hoses from the Hydraulic Motor to the Qwik-Couplers on the Directional Valve, as shown in FIG. 3.

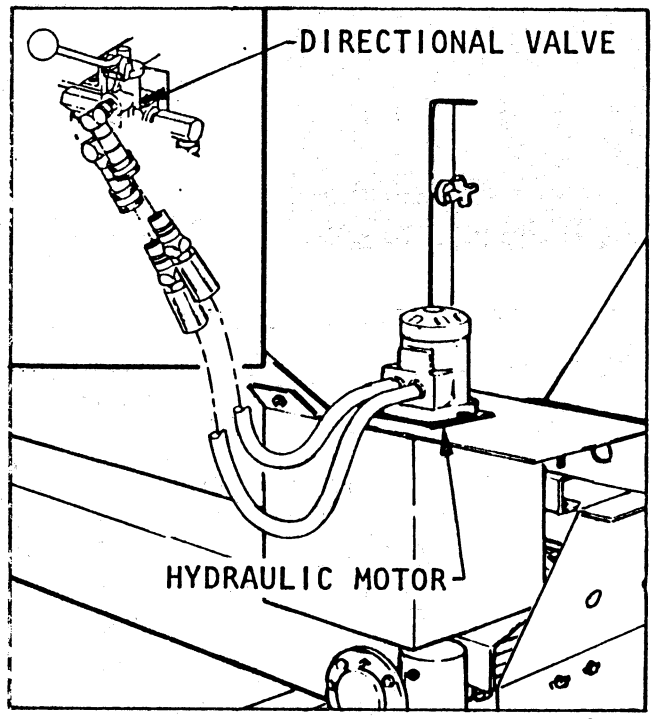

FIG. 3

IMPORTANT!

Hose should be protected where severe wear may be caused by vibration or sliding movement. Support the Hoses with Sta-Straps furnished.

Check the fluid level in the Hydraulic Reservoir, making sure it is at approximately 2 inches from the top. Replenish as necessary with 10W40 Motor Oil.

Operate the hydraulic system for several minutes to warm up. Check all connections for leaks.

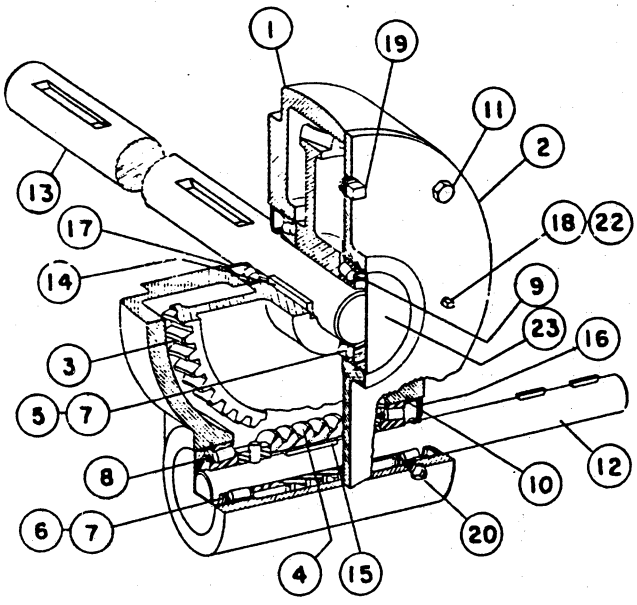

42454 GEAR BOX ASSEMBLY

REF	PART NO.	DESCRIPTION	QTY
1	Not Serviced	Housing	1
2	42418	Cover	1
3	42419	Worm Gear-Bronze	1
4	42420	Worm	1
5	42421	Bearing Cone	2
6	42422	Bearing Cone	2
7	42423	Bearing Cup	4
8	42424	Snap Ring Input	1
9	42425	Snap Ring Output	1
10	42426	Snap Ring	4
11	20-45-AD	Capscrew, 3/8" x 3/4" H.H.	4
12	42428	Shaft-Input	1
13	42429	Shaft-Output	1
14	27-25-C	Woodruff Key - Hard	1
15	27-21-C	Woodruff Key - Hard	1
16	42432	Seal Input	1
17	42433	Seal Output	1
18	42434	Plug, 1/8"-27 NPTF	1
19	42435	Plug, Level, 3/8"-18 NPTF	1
20	361011	Zerk, 1/4"-28 NF	1
21	42437	Gasket, Cover (Not Shown)	1
22	42438	Plug, Vent, 1/8"-27 NPTF	1
23	42439	Cap	2
24	42453	Shim (Not Shown)	A/R

TOP DRESSER

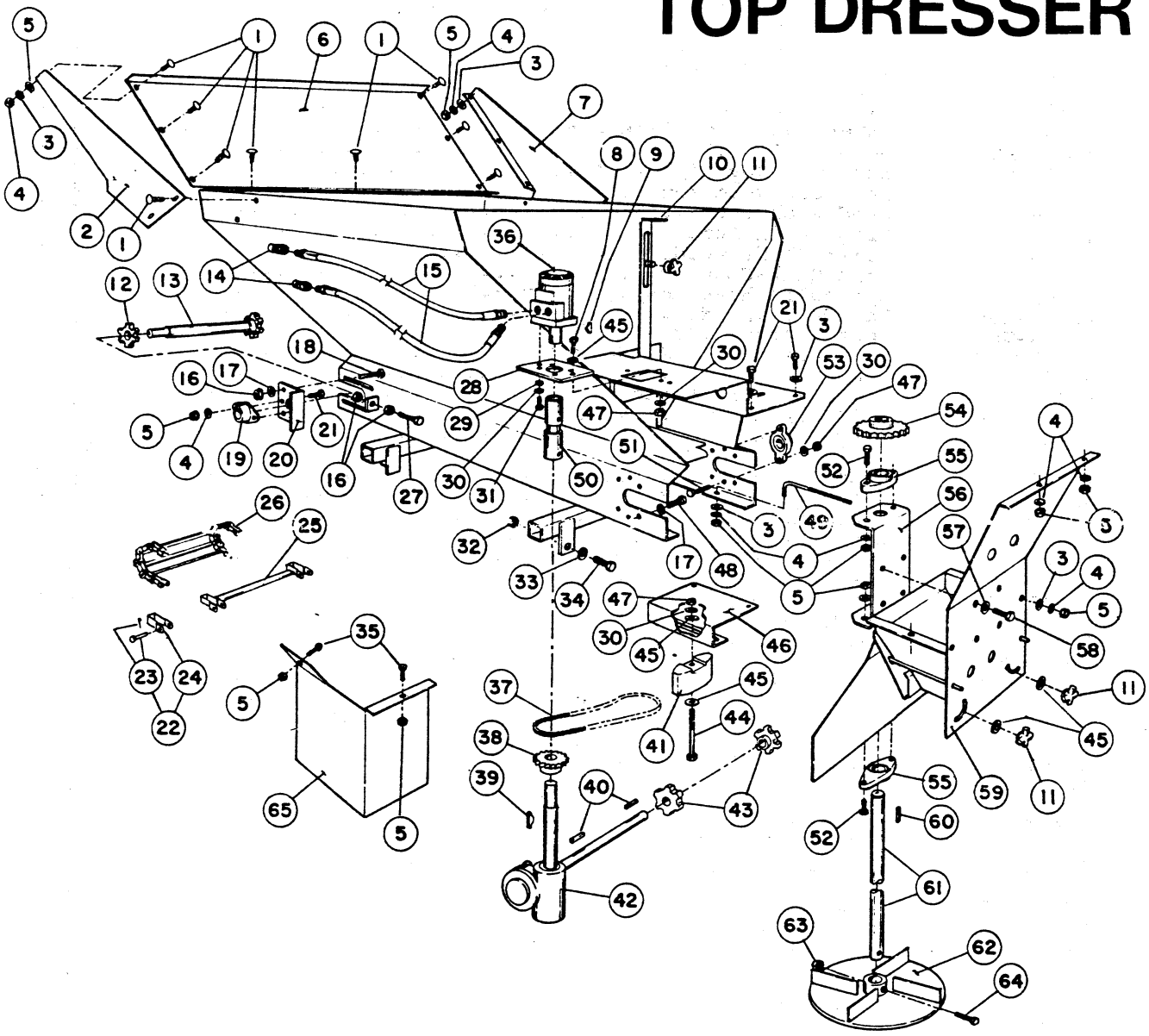

DECALS

PART NO.	DESCRIPTION	QT
66-1210	"TORO"..... Located on the rear of the Hopper.	1
87-0460	"CAUTION! MAX LOAD LIMIT 3500 LBS."..... Located one front and rear of Hopper.	2
42369	"DANGER! STAY CLEAR WHILE SPINNER IS TURNING"... Located at rear of Hopper, near Spinner	1
42370	"IMPORTANT: DO NOT REMOVE BUSHINGS, etc."..... Located at rear of Hopper, near Hydr. Motor.	1
87-0420	"DANGER! TURN POWER OFF BEFORE SERVICING"..... Located one front and rear of Hopper.	2
87-0590	"CAUTION! KEEP ALL SHIELDS IN PLACE, etc."..... Located at front of Hopper	1

TOP DRESSER

REF	PART NO.	DESCRIPTION	
1	25-25-AGD	Carriage Bolt, 5/16 NC x 3/4	13
2	42867	Extension Side Plate-L.H.	2
3	24-10-BD	Flat Washer, 5/16 S.A.E.	15
4	23-10-GD	Lock Washer, 5/16	15
5	22-12-AJD	Hex Nut, 5/16 NC	15
6	42866	Extension End Plate	1
7	42868	Extension Side Plate-R.H.	1
8	20-47-AGD	HHCS, 3/8 x 1"	2
9	27-24-C	Woodruff Key, 1/4 x 1"	1
10	42459	Feedgate Weldment	1
11	42405	Hand Knob	3
12	42404	Drag Chain Sprocket	1
13	42403	Idler Shaft Weldment	1
14	41790	Male Qwik-Coupler	2
15	42359	Hydraulic Hose Assy., 1/2 x 96"	2
16	22-15-AJD	Hex Nut, 1/2 NC	8
17	23-13-GD	Lock Washer, 1/2	6
18	25-100-AGD	Carriage Bolt, 1/2 NC x 1"	6
19	42402	Bearing	2
20	42458	Front Bearing Plate	2
21	20-26-AGD	HHCS, 5/16 NC x 1"	4
22	42409	Drag Chain Link, Pins & Cotters	AR
23	42410	Pin w/ Cotter Key	AR
24	42408	Drag Chain Link	AR
25	42411	Drag Chain Bar w/ Link	AR
26	42400	Drag Chain Assy.	1
27	20-97-AGD	HHCS, 1/2 NC x 4"	2
28	42460	Motor Mounting Plate	1
29	42461	Spacer	4
30	23-11-GD	Lock Washer, 3/8	7
31	20-45-AD	HHCS, 3/8 x 7/8	4
32	22-17-AJD	Hex Nut, 5/8 NC	2
33	24-15-AD	Flat Washer, 5/8	2
34	20-121-AGD	HHCS, 5/8 NC x 1 1/2	2
35	20-24-AGD	HHCS, 5/16 NC x 3/4	2
36	42455	Hydraulic Motor	1
	42456	Seal Kit	AR
37	42407	Roller Chain	1
38	42399	Sprocket	1
39	27-21-C	Woodruff Key, 1/4 x 7/8	1
40	314243	Sq. Key, 1/4 x 2	2
41	42417	Chain Idler Block	1
42	42454	Gear Box Assy. (See Details)	1
43	42406	Drive Sprocket w/ Set Screw	2
44	20-53-AGD	HHCS, 3/8 NC x 2 1/2	1
45	24-11-BD	Flat Washer, 3/8 S.A.E.	6
46	42465	Idler Block Bracket	1
47	22-13-AJD	Hex Nut, 3/8 NC	5
48	20-85-AGD	HHCS, 1/2 NC x 1"	4
49	42457	"L"-Bolt	2
50	42462	Shaft Assy.	1
51	20-49-AGD	HHCS, 3/8 NC x 1 1/2	2
52	20-28-AGD	HHCS, 5/16 NC x 1 1/2	4
53	42401	Bearing	1
54	42415	Sprocket	1
55	42416	Bearing	2
56	42464	Bearing Bracket Weldment	1
57	24-12-BD	Flat Washer, 7/16 S.A.E.	4
58	20-67-AGD	HHCS, 7/16 NC x 1 1/4	4
59	42412	Spinner Weldment	1
60	314224	Sq. Key, 1/4 x 1"	1
61	42413	Spinner Shaft	1
62	42414	Disc Weldment	1
63	22-13-AJFD	Lock Nut, 3/8 NC	1
64	20-51-AGD	HHCS, 3/8 NC x 2"	1
65	42463	Chain Shield	1