Form No. 3466-511 Rev E

TORO®

Count on it.

Parts Catalog

Reelmaster® 5010-H

Traction Unit

Model No. 03950—Serial No. 415300000 and Up

Register at www.Toro.com.
Original Instructions (EN)

CE

3466-511 E

Ordering Replacement Parts

To order replacement parts, please supply the part number, the quantity, and the description of each part desired.

Understanding Reference Numbers

Each identified part in an illustration has a reference number. The reference number for a part also appears in the parts list, along with other information about the part.

This catalog uses two special reference number formats, one to indicate parts in a service assembly and another to indicate the quantity of a given part in an illustration.

Service Assembly Reference Numbers

Parts in service assemblies have reference numbers in the form a:b. The a represents the reference number of the entire service assembly and the b represents a sequential number unique to each part within the service assembly.

For example, a wheel assembly might be identified by reference number 6, the tire by 6:1, the valve by 6:2, and the wheel by 6:3. When you order the assembly identified by reference number 6, you receive all parts identified by reference numbers 6:1,6:2, and 6:3. However, you may also order any part individually. Reference numbers of this type appear in illustration and in parts lists.

Reference Numbers Indicating Quantity

In an illustration, if a reference number indicates more than one part, the reference number has the form nX y. The n represents the quantity of the part, the X is the multiplication symbol, and the y represents the reference number.

For example, in an illustration, the reference number 2X 37 means that two of the parts identified by reference number 37 are indicated.

Contents

Frame Assembly 4
Platform and Shroud Assembly 5
Pedal Assembly 6
Steering Assembly 7
Steering Tilt Column Assembly No. 106-3622 8
Steering Valve Assembly No. 106-3621 9
Control Panel Assembly 10
Joystick Bracket Assembly No. 120-5280 12
Front Axle Assembly 13
Rear Axle Assembly 14
Tie Rod Assembly No. 139-6029 15
Hub and Spindle Assembly No. 117-8961 16
No. 1, 4 and 5 Lift Arm Assembly 17
No. 2 and 3 Lift Arm Assembly 19
Seat and Control Arm Wiring Harness Assembly 20
Battery Electrical Assembly 21
Electrical Assembly 22
Wire Harness Assembly No. 122-2913 23
Gear Pump Assembly 24
Tandem Gear Pump Assembly No. 125-1530 25
Seat Base Assembly 26
Hood Assembly 27
Radiator Assembly 28
Fuel System Assembly 30
Hydraulic Tank Assembly 31
Seat and Roll-Over Protection System Assembly 32
Seat Assembly No. 139-2700 33
Mechanical Seat Suspension Assembly No. 145-5295 34
Traction Pump Mounting Assembly 35
Traction Hydraulic Assembly 36
Hydraulic Motor Assembly No. 139-6038 37
Hydraulic Motor Assembly No. 139-6039 38
Hydraulic Brake Assembly 39
Brake Release Manifold Assembly No. 139-6046 40
Front Lift Hydraulic Assembly 41
Hydraulic Cylinder Assembly No. 138-6999 42
Hydraulic Cylinder Assembly No. 119-6987 43
Hydraulic Manifold Block Assembly No. 105-7577 44
Rear Lift Hydraulic Assembly 45
Steering Hydraulic Assembly 46
Hydraulic Cylinder Assembly No. 110-9035 48
Engine, Air Cleaner and Drive Shaft Assembly 49
Air Cleaner Assembly No. 106-5277 51
48 Volt Battery Assembly 52
48 Volt Contactor Assembly 53
Reel Motor Plumbing Assembly 54
Generator Assembly 55
Generator/Controller Assembly No. 127-2655 56
Generator Assembly No. 127-2653 57
Driveshaft Assembly No. 139-6044 58
Attachments and Accessories 59

© 2024—The Toro® Company
8111 Lyndale Avenue South
Bloomington, MN 55420

Contact us at www.Toro.com.
Printed in the USA.
All Rights Reserved

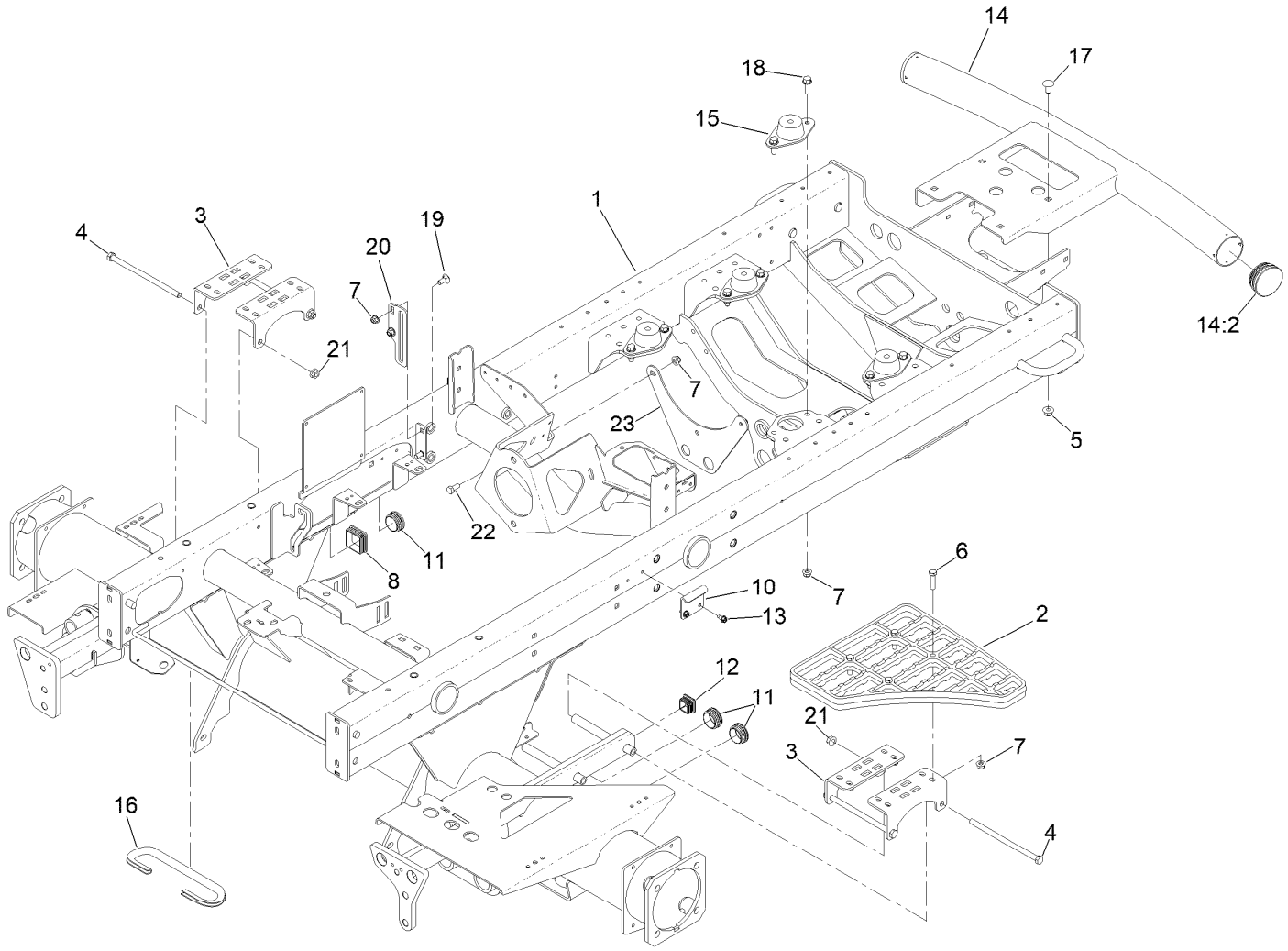

Frame Assembly

Ref.	Part Number	Qty.	Description
1	145-2467	1	Frame ASM-Hybrid
2	110-9041	1	Step-Aluminum
3	127-2697-01	4	Bracket-Step
4	323-36	4	Screw-HH
5	104-8301	4	Nut-HF, NI
6	322-17	4	Screw-HH
7	104-8300	16	Nut-HF, NI
8	95-9495	1	Cap
10	110-8972	1	Hook-Latch
11	110-9012	3	Caplug
12	110-9013	1	Caplug
13	32104-17	2	Screw-HWH

Ref.	Part Number	Qty.	Description
14	147-3550	1	Bumper ASM
14:2	2410-42	2	Cap-End
15	120-6274	4	Mount-Engine
16	145-2520	1	Trim-Brake Hose
17	3231-21	4	Screw-CARR
18	3234-29	8	Screw-HHF
19	3230-1	2	Bolt-CARR
20	108-7584-01	1	Plate-Guide, Rod
21	32128-21	4	Nut-HF Lock
22	322-3	2	Screw-HH
23	145-2559-01	1	Bracket-Bulkhead

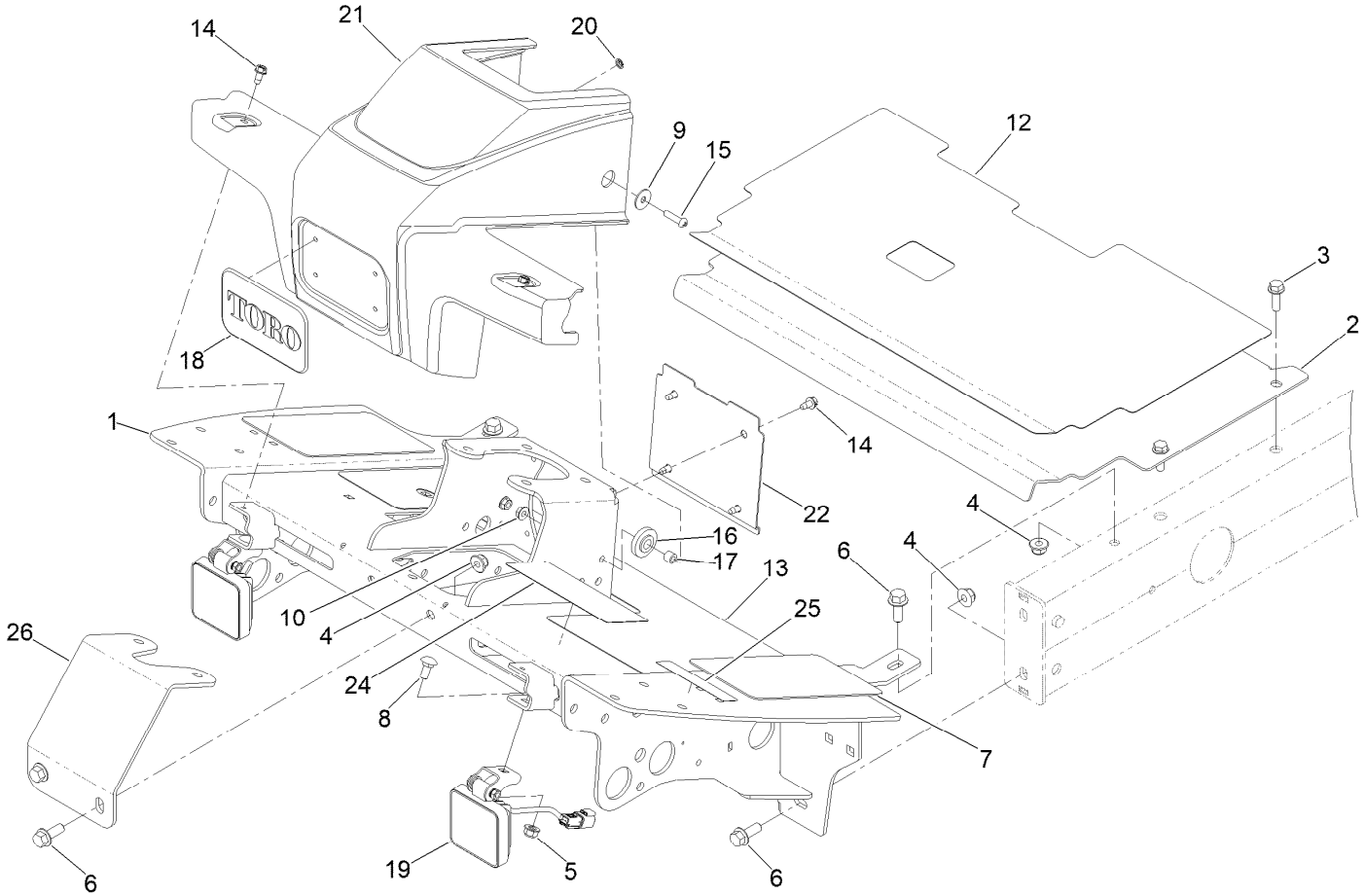

Platform and Shroud Assembly

Ref.	Part Number	Qty.	Description
1	145-2490-01	1	Platform ASM
2	115-8064-01	1	Plate-Floor
3	3234-17	4	Screw-HHF
4	104-8301	6	Nut-HF, NI
5	104-8300	2	Nut-HF, NI
6	3234-11	6	Screw-HHF
7	125-2910	2	Tread-Floor, Side
8	3230-1	2	Bolt-CARR
9	87-6630	2	Washer-Plain
10	32128-33	2	Nut-HF
12	125-2911	1	Tread-Panel, Service
13	145-2510	1	Tread-Floor Board
14	32104-17	6	Screw-HWH

Ref.	Part Number	Qty.	Description
15	106-9518	2	Screw-PRH
16	240-11	2	Bushing-Flange
17	66-8010	2	Spacer
18	93-6028	1	Plate-Logo
19	145-2598	2	Light-Work, LED
20	138-6996	4	Nut-Push
21	110-0944	1	Shroud-Platform
22	110-0947-03	1	Plate-Cover
24	133-2930	1	Decal-Danger
24	133-2931	1	Decal-Danger (CE)
25	133-8062	1	Decal-Spark Arrestor
26	110-8876-0P	1	Brace-Column

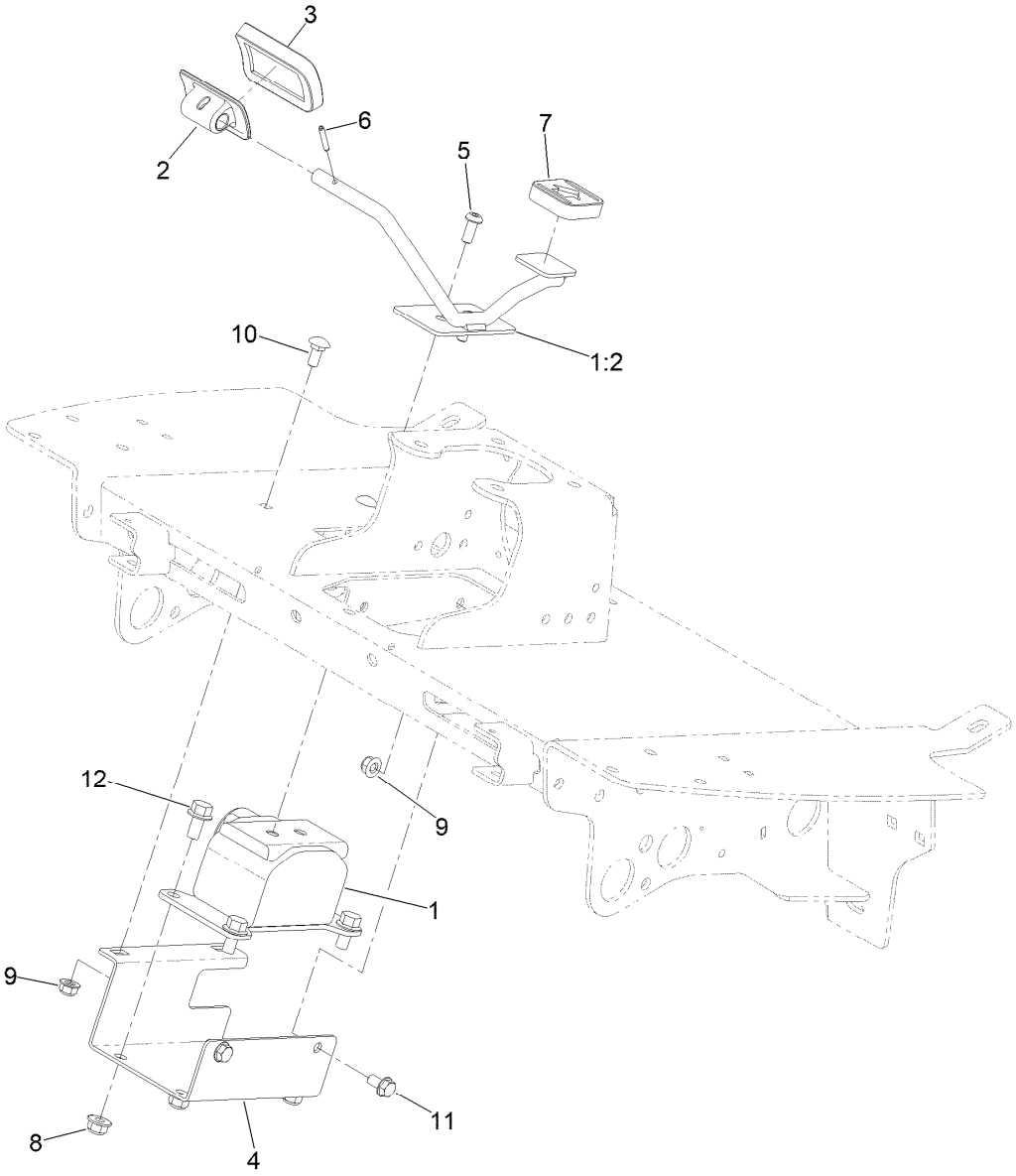

Pedal Assembly

Ref.	*Part Number*	*Qty.*	*Description*
1	145-2545	1	E-Pedal ASM
1:2	145-2521	1	Pedal ASM
2	117-9507	1	Pedal-Accelerator
3	74-9100	1	Pad-Pedal, Forward
4	145-2489-0P	1	Bracket-Pedal, Mount
5	3274-96	2	Screw-HSBH
6	32121-45	1	Pin-Spring
7	74-9110	1	Pad-Pedal, Reverse
8	104-8301	4	Nut-HF, NI
9	104-8300	4	Nut-HF, NI
10	3230-1	2	Bolt-CARR
11	3234-7	2	Screw-HHF
12	3234-1	4	Screw-HHF

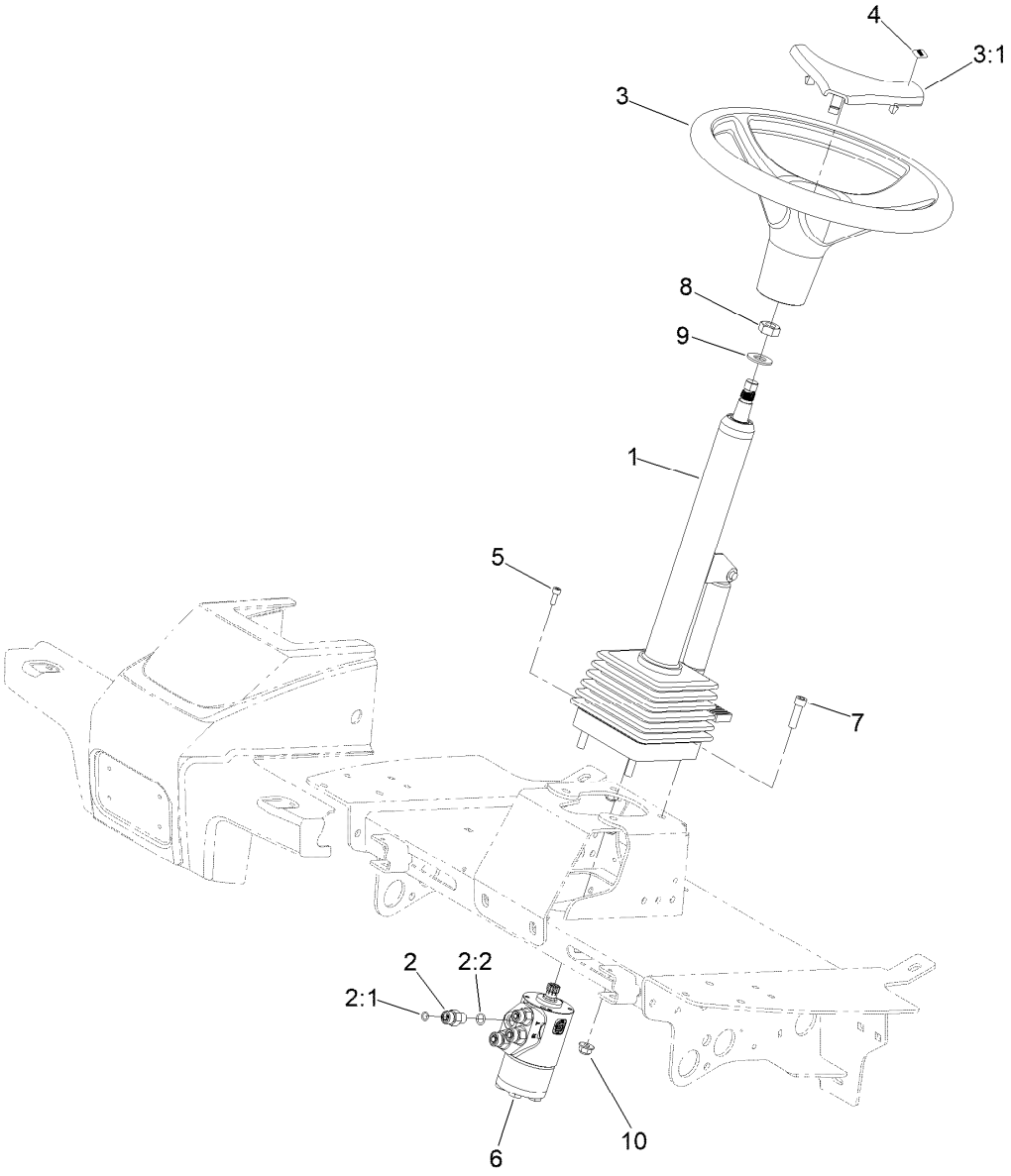

Steering Assembly

Ref.	*Part Number*	*Qty.*	*Description*
1	106-3622	1	Steering Tilt Column ASM
2	340-2	4	Fitting-Straight
2:1	237-22	1	O-Ring
2:2	237-42	1	O-Ring
3	98-1471	1	Wheel-Steering
3:1	98-1468	1	Cover-Wheel, Steering
4	98-1459	1	Decal
5	105-2409	4	Screw-HSH
6	106-3621	1	Steering Valve ASM
7	3274-1	4	Screw-HSH
8	3296-33	1	Nut-Lock, NI
9	3256-27	1	Washer-Flat
10	104-8301	4	Nut-HF, NI

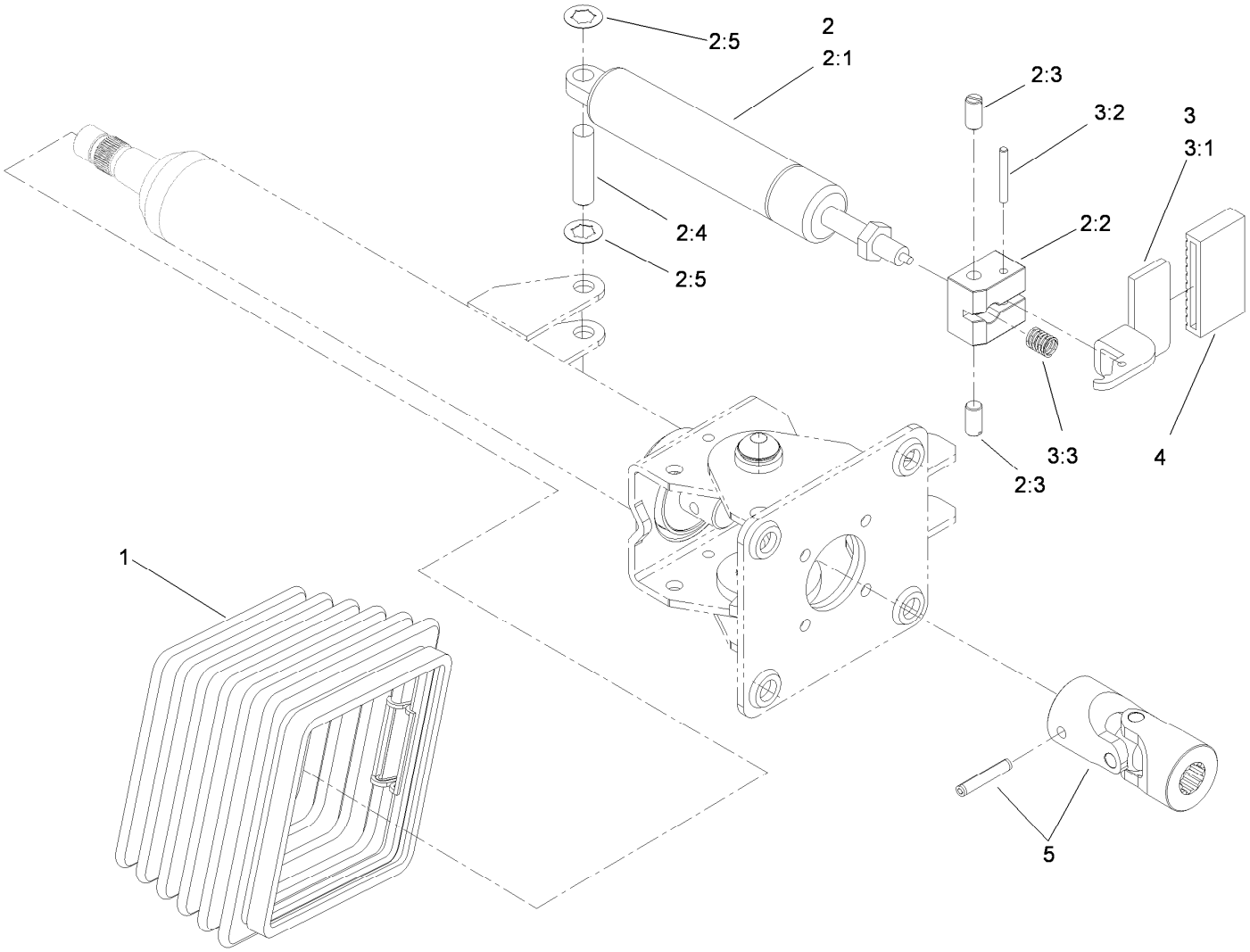

Steering Tilt Column Assembly No. 106-3622

Ref.	*Part Number*	*Qty.*	*Description*
1	110-6462	1	Bellows-Rubber
2	110-6463	1	Cylinder Service Kit
2:1		1	Cylinder-Gas ●
2:2		1	Block-Pedal ●
2:3		2	Bolt ●
2:4		1	Pin ●
2:5		2	Washer-Lock ●
3	110-6464	1	Pedal Service Kit
3:1		1	Pedal ●
3:2		1	Pin ●
3:3		1	Spring ●
4	110-6465	1	Cover-Pedal
5	120-6256	1	Universal Joint Kit

● Not serviced separately

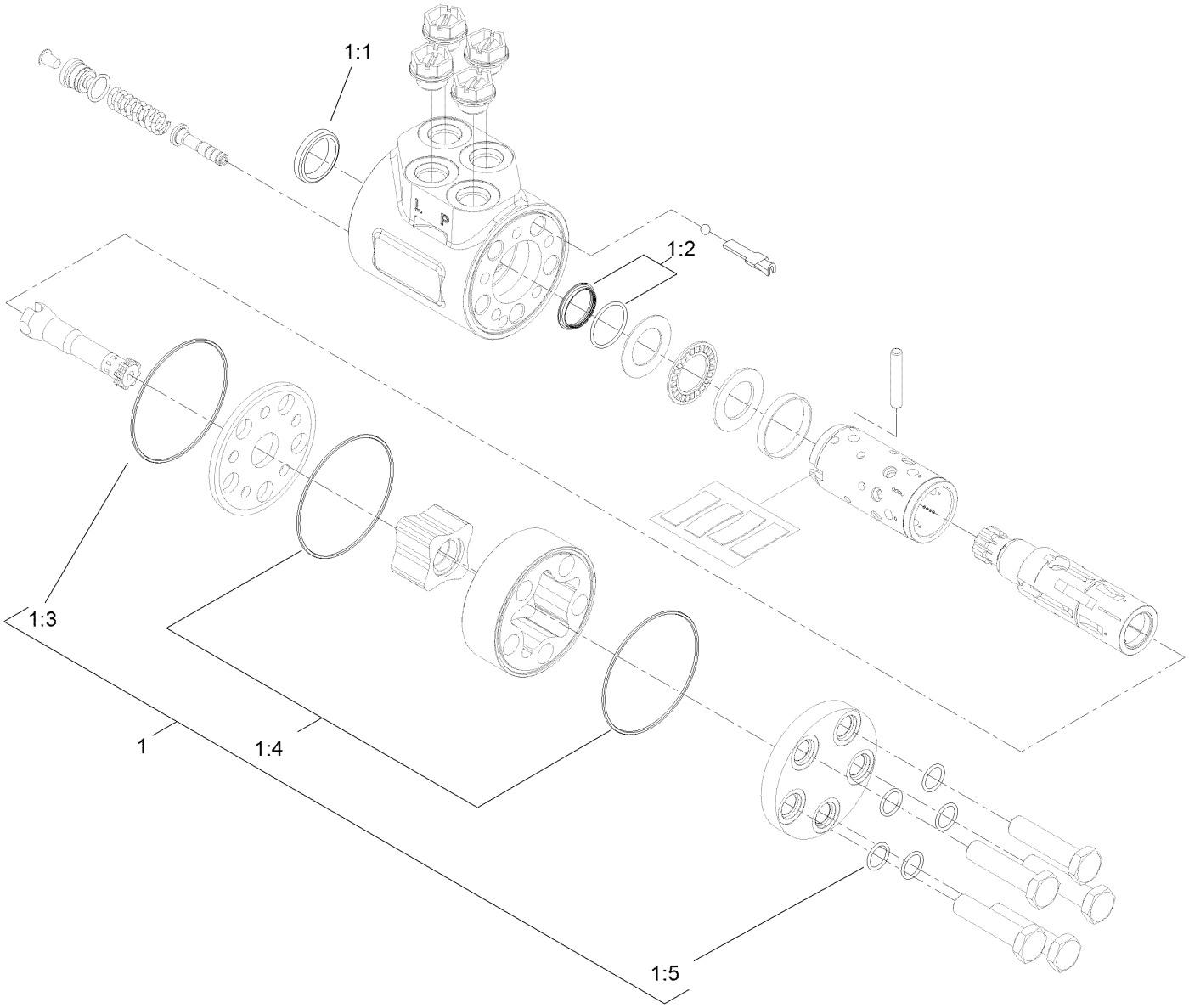

Steering Valve Assembly No. 106-3621

Ref.	*Part Number*	*Qty.*	*Description*
1	106-6716	1	Seal Kit
1:1		1	Ring-Seal, Dust ●
1:2		1	Seal-Shaft ●
1:3		1	O-Ring ●
1:4		2	O-Ring ●
1:5		5	O-Ring ●

● Not serviced separately

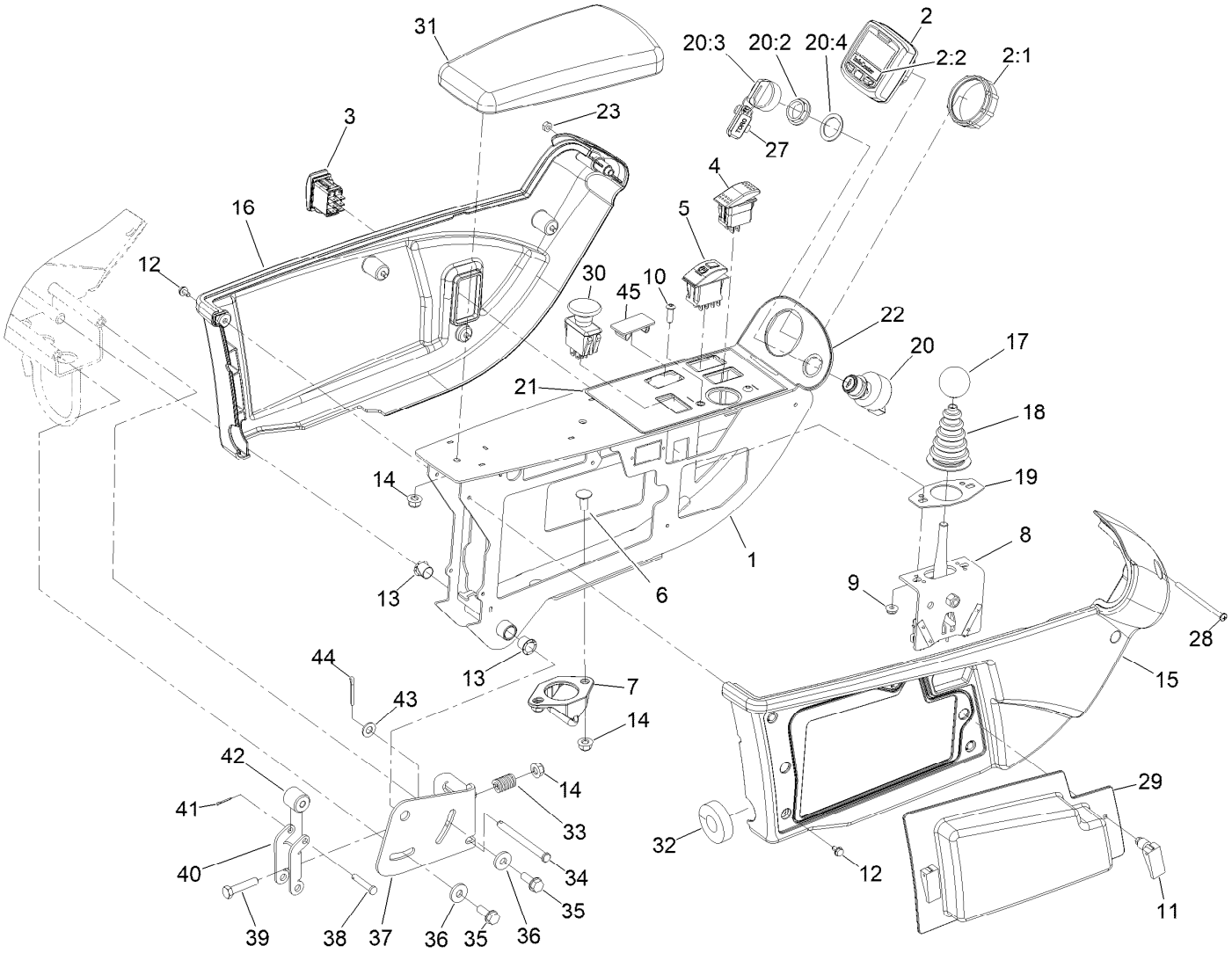

Control Panel Assembly

Ref.	Part Number	Qty.	Description
1	145-2474-03	1	Frame ASM, Control Arm [black]
2	120-6310	1	LCD Display ASM Kantrak 1700
2:1	120-4630	1	Nut-Display
2:2	120-6311	1	Decal-Display
3	95-8999	1	Switch-Rocker, On-None-On
4	114-3329	1	Switch-Rocker
5	111-2254	1	Switch-Rocker, On-None-On
6	3230-23	2	Bolt-CARR
7	125-1938	1	Latch
8	120-5280	1	Bracket-Joystick
9	104-7201	2	Nut-HF, NI
10	3274-69	2	Screw-HSBH
11	74-5950	2	Latch-Swell
12	104-2065	10	Screw-HWH
13	256-257	2	Bushing-Nyliner
14	104-8300	5	Nut-HF, NI
15	108-7605	1	Cover-RH

Ref.	Part Number	Qty.	Description
16	108-7604	1	Cover-LH
17	233-42	1	Knob
18	93-5961	1	Boot-Lever
19	112-9181	1	Plate-Boot
20	106-5269	1	Ignition Switch ASM
20:2	108-8660	1	Nut-Mounting
20:3	106-5270	1	Ignition Key Set
20:4	108-8659	1	Washer-Backup
21	145-2483	1	Decal-Control Panel
22	120-4158	1	Decal-Console, Upper
23	3296-2	1	Nut-Lock, NI
27	99-8970	1	Key-Latch, Hood
28	3250-22	1	Screw-PPH
29	114-0446	1	Panel-Access
30	93-9999	1	Switch-PTO
31	108-7602	1	Rest-Arm
32	145-2594	1	Seal-Foam
33	110-5331	1	Spring-Compression
34	283-88	1	Pin-Clevis
35	32144-41	2	Screw-Taptite
36	4-2390	2	Washer-Flat

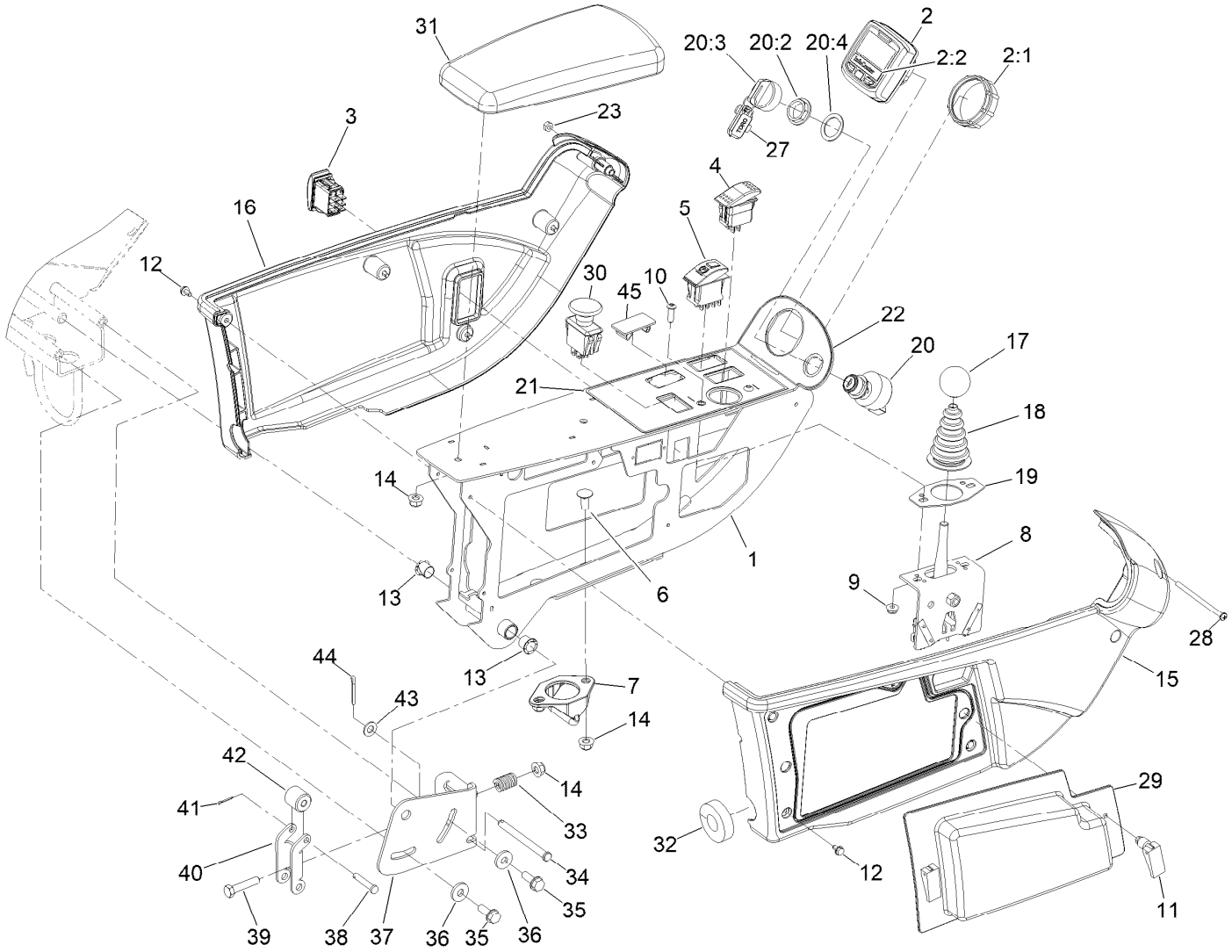

Control Panel Assembly (continued)

Ref.	Part Number	Qty.	Description
37	110-5313-03	1	Bracket-Retainer
38	283-73	1	Pin-Clevis
39	322-7	1	Screw-HH
40	110-5314	1	Latch
41	3272-1	1	Pin-Cotter
42	110-8856	1	Spacer
43	3256-23	1	Washer-Plain
44	3272-11	1	Pin-Cotter
45	99-7420	1	Plug-Hole

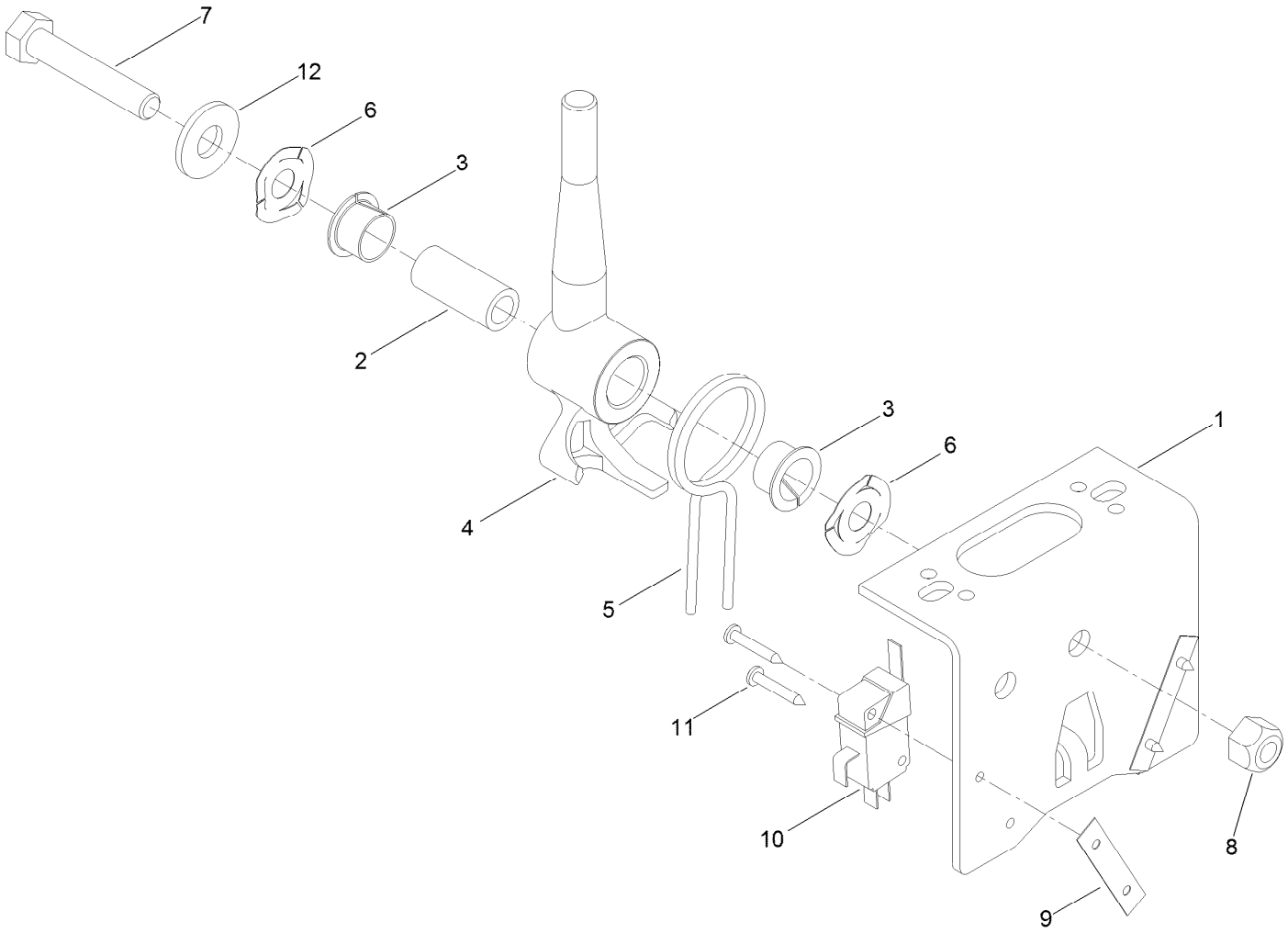

Joystick Bracket Assembly No. 120-5280

Ref.	*Part Number*	*Qty.*	*Description*
1	115-5357-03	1	Bracket-Joystick
2	106-4192	1	Spacer
3	93-5547	2	Bushing-Nylon
4	119-3540	1	Hub-Pivot, Joystick
5	105-8289	1	Spring-Torsion
6	106-4193	2	Washer-Finger, Spring
7	322-9	1	Screw-HH
8	3296-29	1	Nut-Lock, NI
9	3290-354	2	Nut-Speed
10	108-6496	2	Switch (W/Boot)
11	95-3003	4	Screw-PPHTF
12	3256-3	1	Washer-Flat

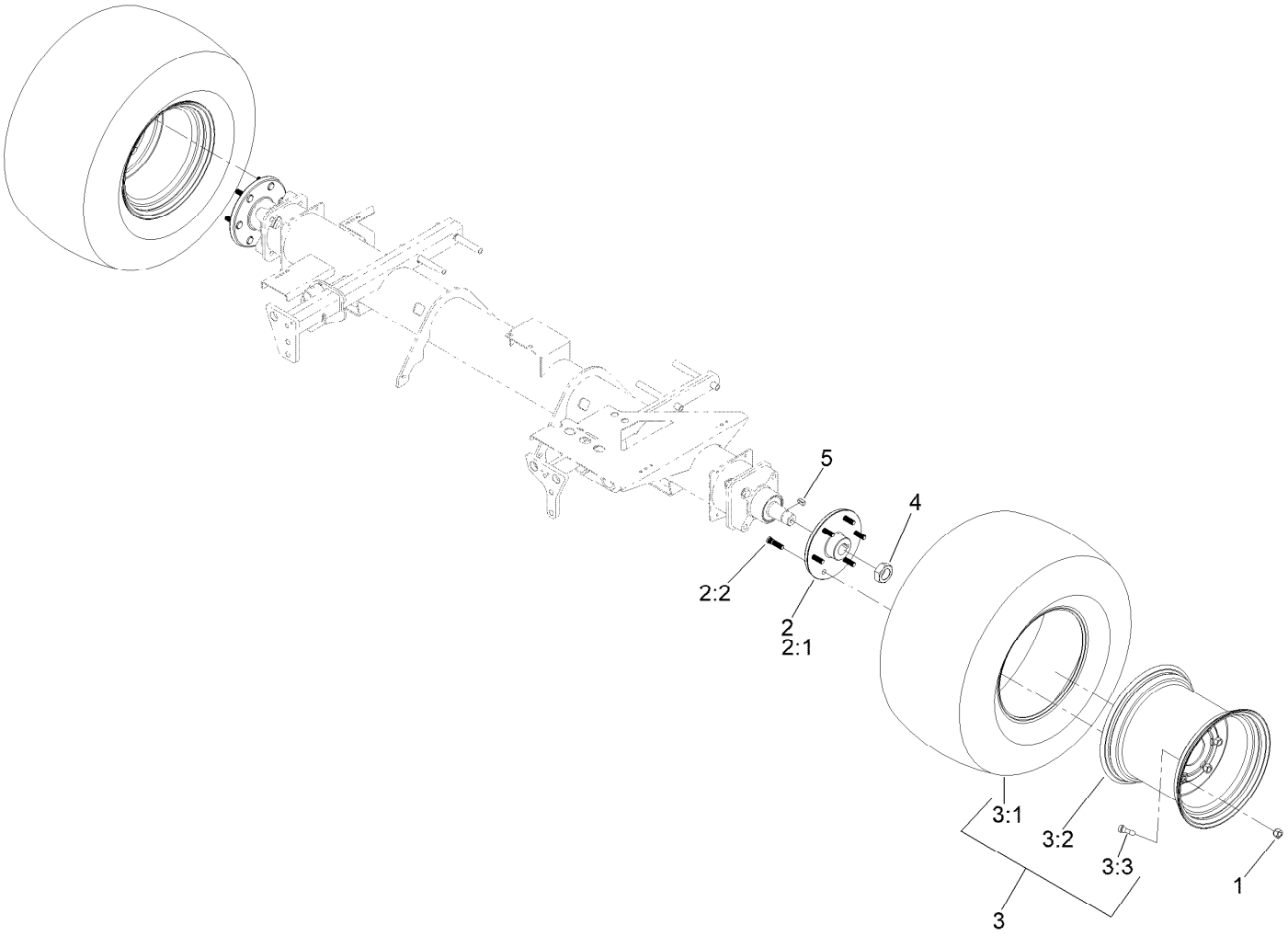

Front Axle Assembly

Ref.	*Part Number*	*Qty.*	*Description*
1	242-50	12	Nut-Lug
2	144-2058	2	Hub ASM (1.50)
2:1	136-7971	1	Hub-Wheel
2:2	114-3918	6	Stud-Wheel
3	139-6048	2	Tire ASM
3:1	133-2724	1	Tire
3:2	139-6049	1	Wheel
3:3	232-27	1	Stem-Valve
4	117-3290	2	Nut-Hex
5	117-5198	2	Key-Square

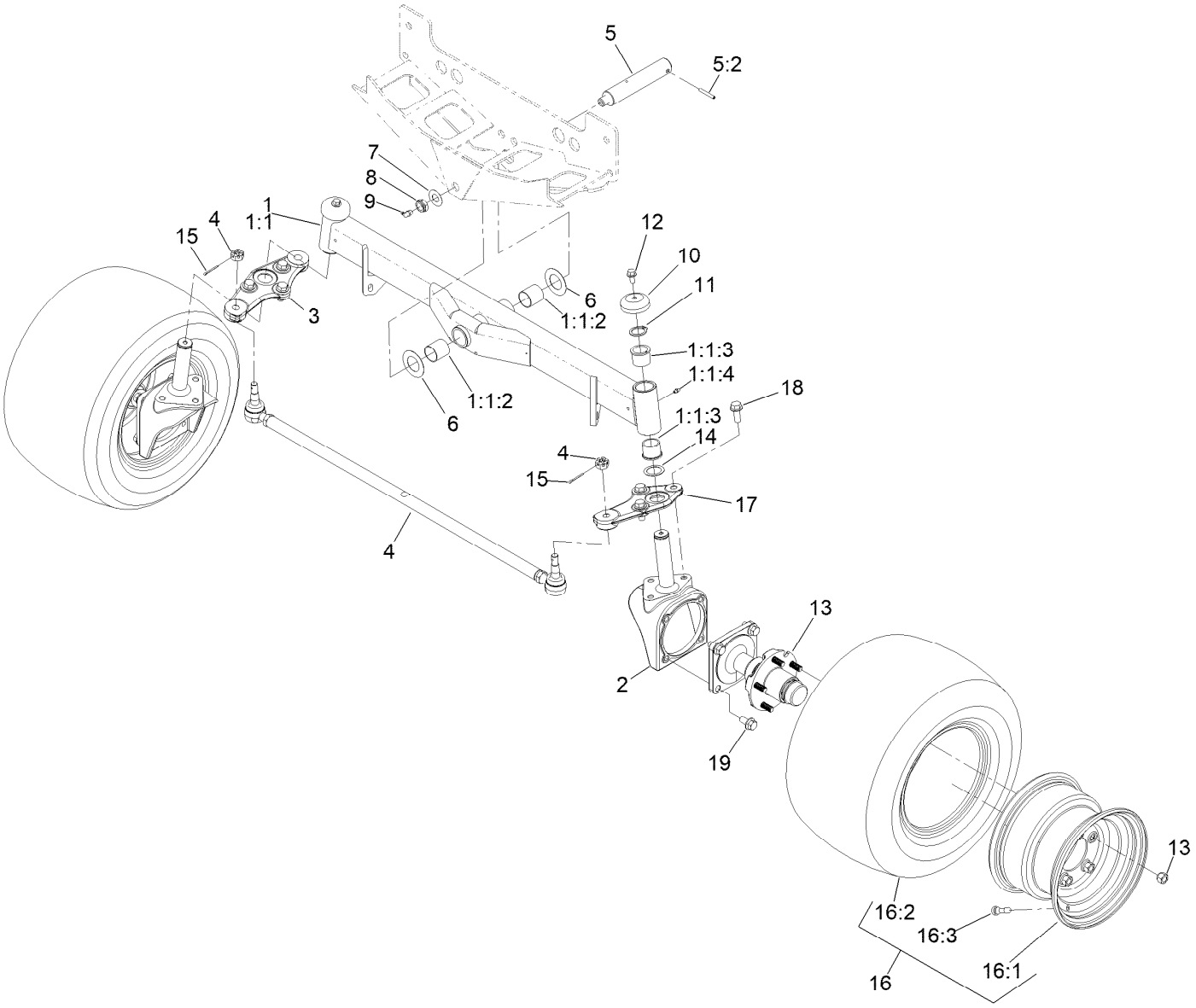

Rear Axle Assembly

Ref.	Part Number	Qty.	Description
1	107-4546-03	1	Axle ASM
1:1		1	Axle ●
1:1:2	99-6964	2	Bushing-Axle
1:1:3	104-0015	4	Bushing-Flange
1:1:4	302-5	2	Fitting-Grease
2	107-4517-03	2	Housing-Motor
3	140-3142	1	Link-Drag, RH
4	139-6029	1	Tie Rod ASM
5	140-6101	1	Pin ASM-Axle Pivot
5:2	32121-32	1	Pin-Roll
6	99-8432	2	Washer-Thrust
7	71-4540	1	Washer-Thrust
8	3296-15	1	Nut-Lock, NI
9	302-33	1	Fitting-Grease

Ref.	Part Number	Qty.	Description
10	69-8890	2	Cap-Spindle
11	32151-77	2	Ring-Retaining, External
12	3234-1	2	Screw-HHF
13	117-8961	2	Hub And Spindle ASM
14	76-2980	2	Washer-Thrust
15	3272-12	2	Pin-Cotter
16	117-0281	2	Rim And Tire ASM
16:1	117-0280	1	Rim
16:2	117-5125	1	Tire
16:3	232-27	1	Stem-Valve
17	140-3144	1	Link-Drag, LH
18	3234-38	6	Screw-HHF
19	3234-6	8	Screw-HHF

● Not serviced separately

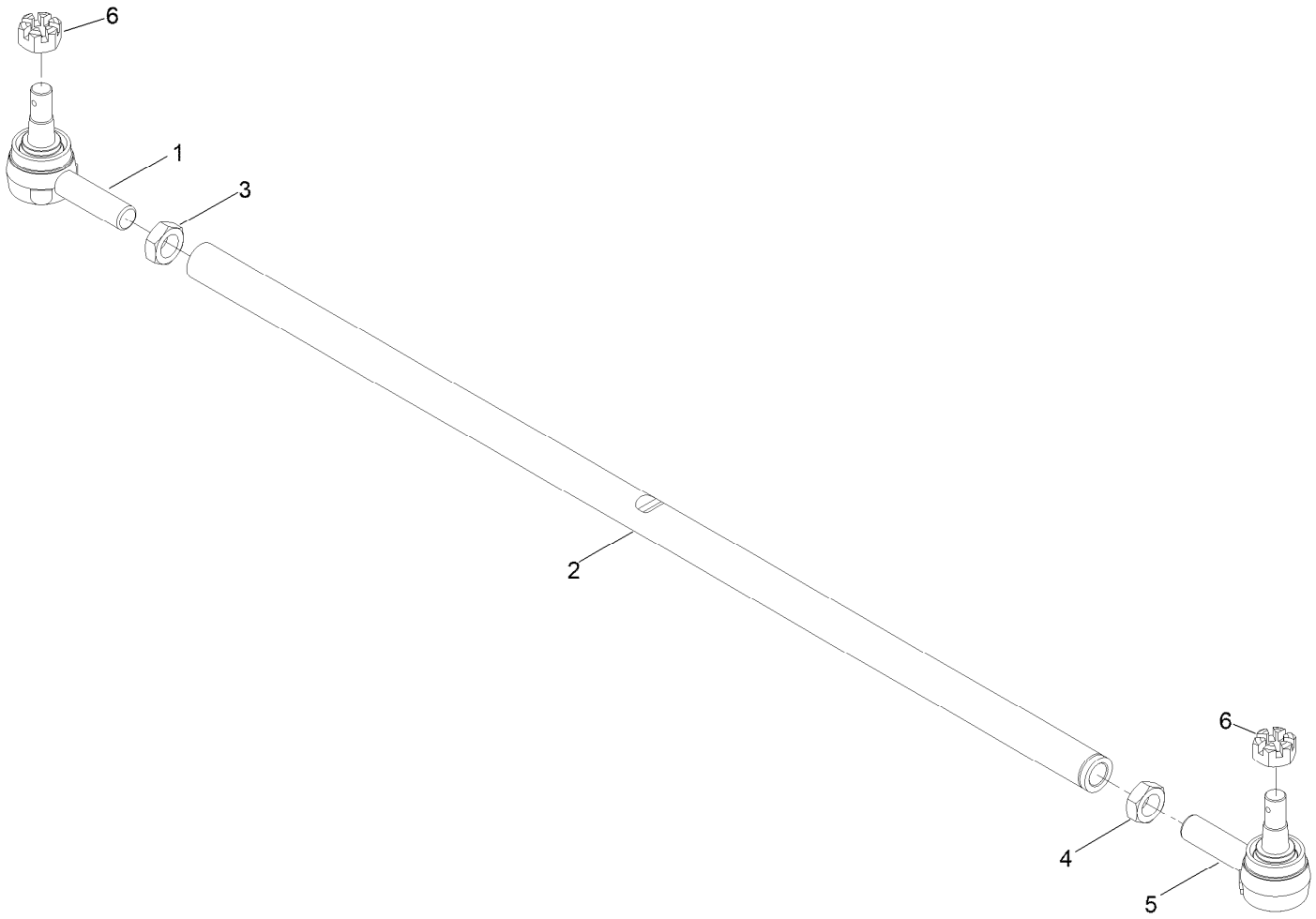

Tie Rod Assembly No. 139-6029

Ref.	*Part Number*	*Qty.*	*Description*
1	144-3901	1	Tie Rod End
2	139-6030	1	Rod-Tie
3	84-5300	1	Nut-Jam
4	110-5337	1	Nut-Jam
5	144-3902	1	Tie Rod End
6	140-6135	2	Nut-Hex, Slotted

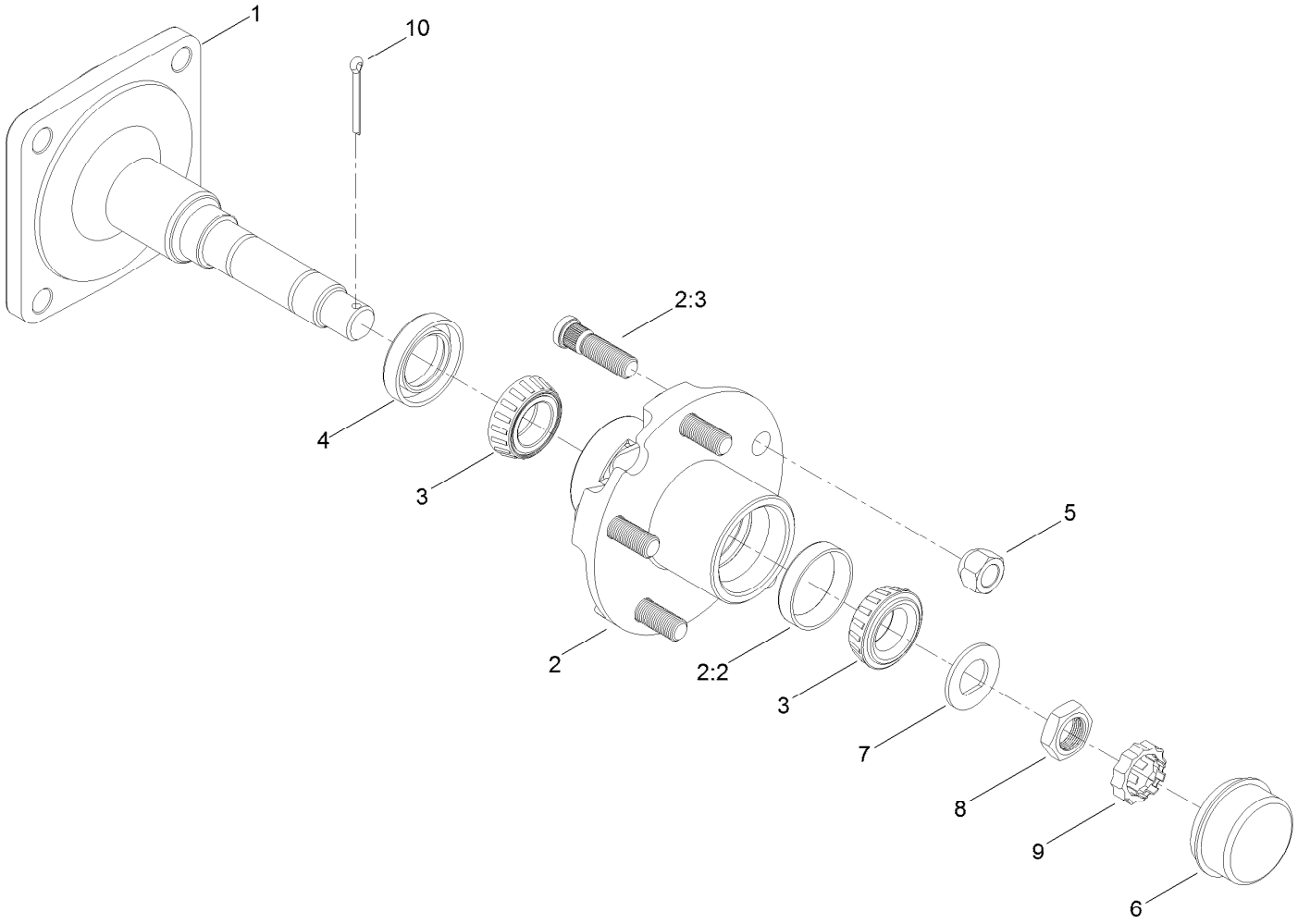

Hub and Spindle Assembly No. 117-8961

Ref.	*Part Number*	*Qty.*	*Description*
1	117-8958	1	Spindle
2	117-8963	1	Hub ASM
2:2	254-72	2	Bearing-Cup, Tapered
2:3	114-3918	5	Stud-Wheel
3	254-94	2	Bearing-Cone, Tapered
4	112-1690	1	Seal-Oil
5	242-50	5	Nut-Lug
6	241-119	1	Cap-Dust
7	117-8259	1	Washer-Spindle
8	117-8260	1	Nut
9	93-0307	1	Nut-Lock, Retainer
10	3272-18	1	Pin-Cotter

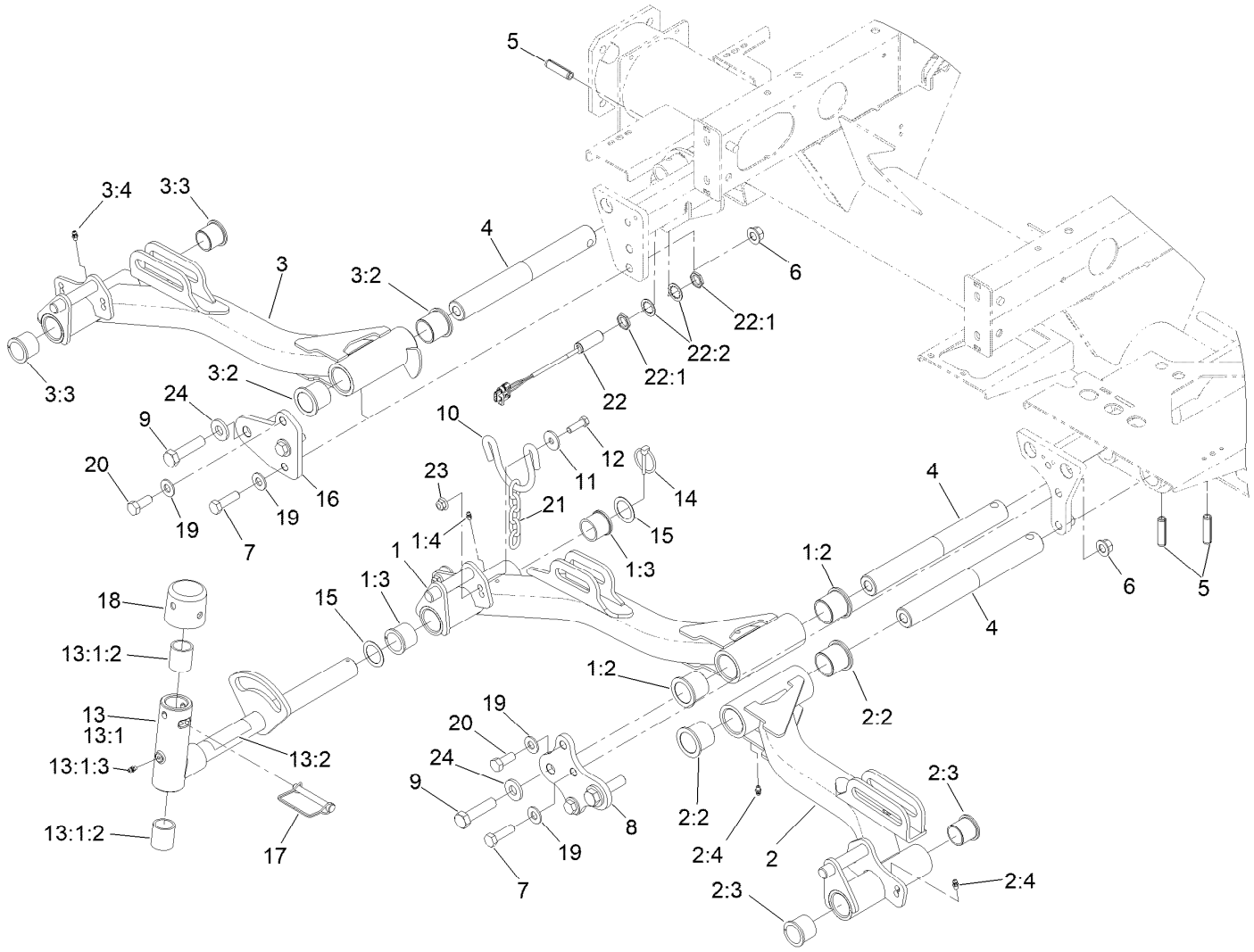

No. 1, 4 and 5 Lift Arm Assembly

Ref.	Part Number	Qty.	Description
1	133-2911	1	Lift Arm ASM #1
1:2	69-6470	2	Bushing-Caster
1:3	104-0015	2	Bushing-Flange
1:4	302-5	2	Fitting-Grease
2	133-2914	1	Lift Arm ASM #4
2:2	69-6470	2	Bushing-Caster
2:3	104-0015	2	Bushing-Flange
2:4	302-5	2	Fitting-Grease
3	133-2915	1	Lift Arm ASM #5
3:2	69-6470	2	Bushing-Caster
3:3	104-0015	2	Bushing-Flange
3:4	302-5	2	Fitting-Grease
4	117-0208	3	Shaft-Pivot, Liftarm
5	32121-122	3	Pin-Roll
6	99-5107	4	Nut-Lock
7	325-7	4	Screw-HH
8	117-5154-01	1	Plate-Bridge 1 And 4
9	327-7	3	Screw-HH
10	110-0922	3	Hoop-Chain
11	63-8410	6	Washer
12	323-7	6	Screw-HH
13	138-1248	3	Pivot Yoke ASM
13:1		1	Yoke-Pivot ●
13:1:2	121-3187	2	Bushing
13:1:3	302-5	1	Fitting-Grease
13:2	110-9642	1	Decal-Warning
14	92-1298	3	Pin-Lynch
15	76-2980	6	Washer-Thrust
16	117-5153-01	1	Plate-Bridge 5
17	107-7400	3	Pin-Lynch
18	107-4027	3	Cap
19	87-7270	6	Washer-Thrust
20	325-5	2	Screw-HH
21	84-2451	3	Chain-Straight, 5 Link
22	115-5300	1	Proximity Switch ASM
22:1	117-3207	2	Nut-Hex

● Not serviced separately

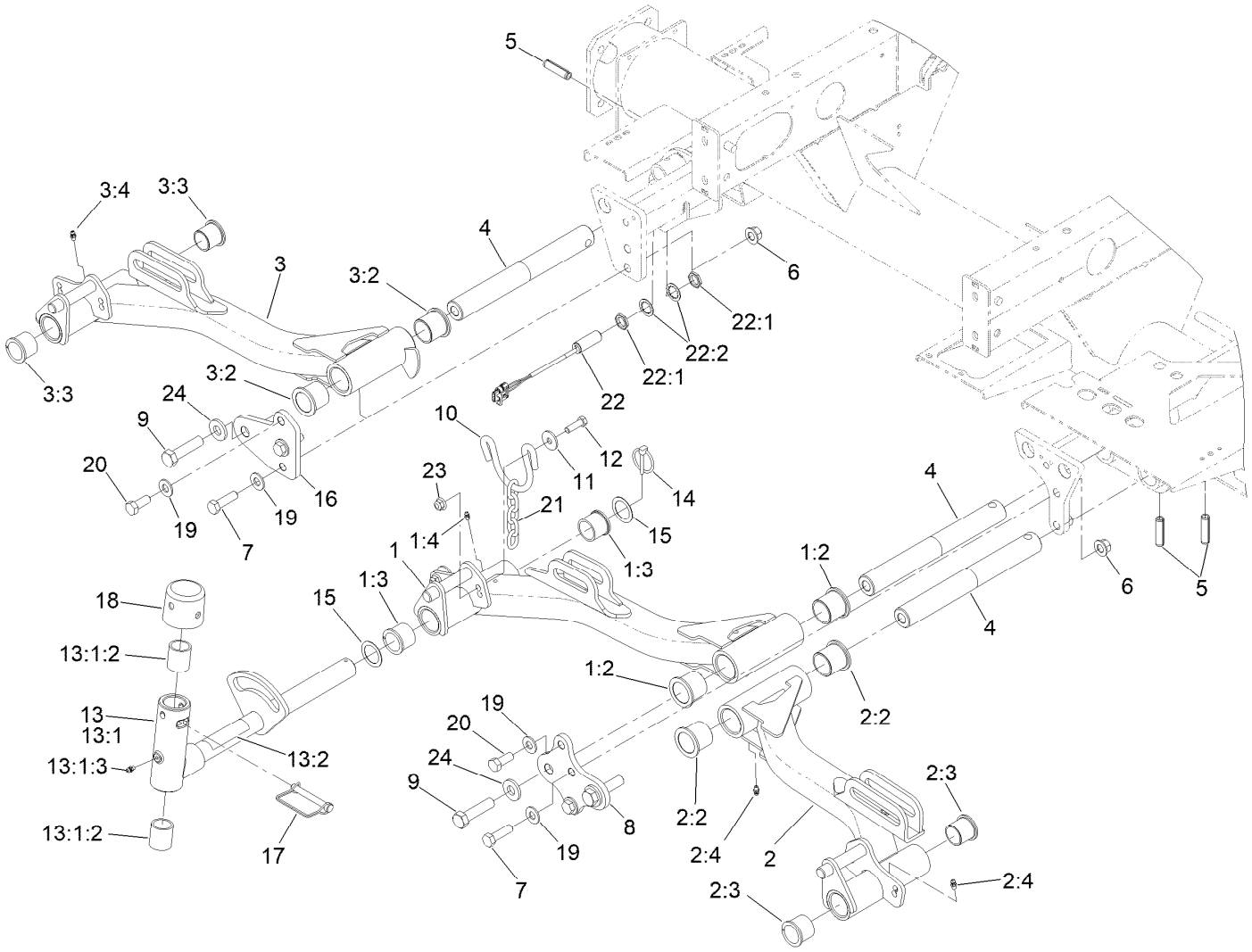

No. 1, 4 and 5 Lift Arm Assembly (continued)

Ref.	Part Number	Qty.	Description
22:2	117-3208	2	Washer-Lock, Internal Tooth

Ref.	Part Number	Qty.	Description
23	104-8301	6	Nut-HF, NI
24	99-7667	3	Washer-Flat

● Not serviced separately

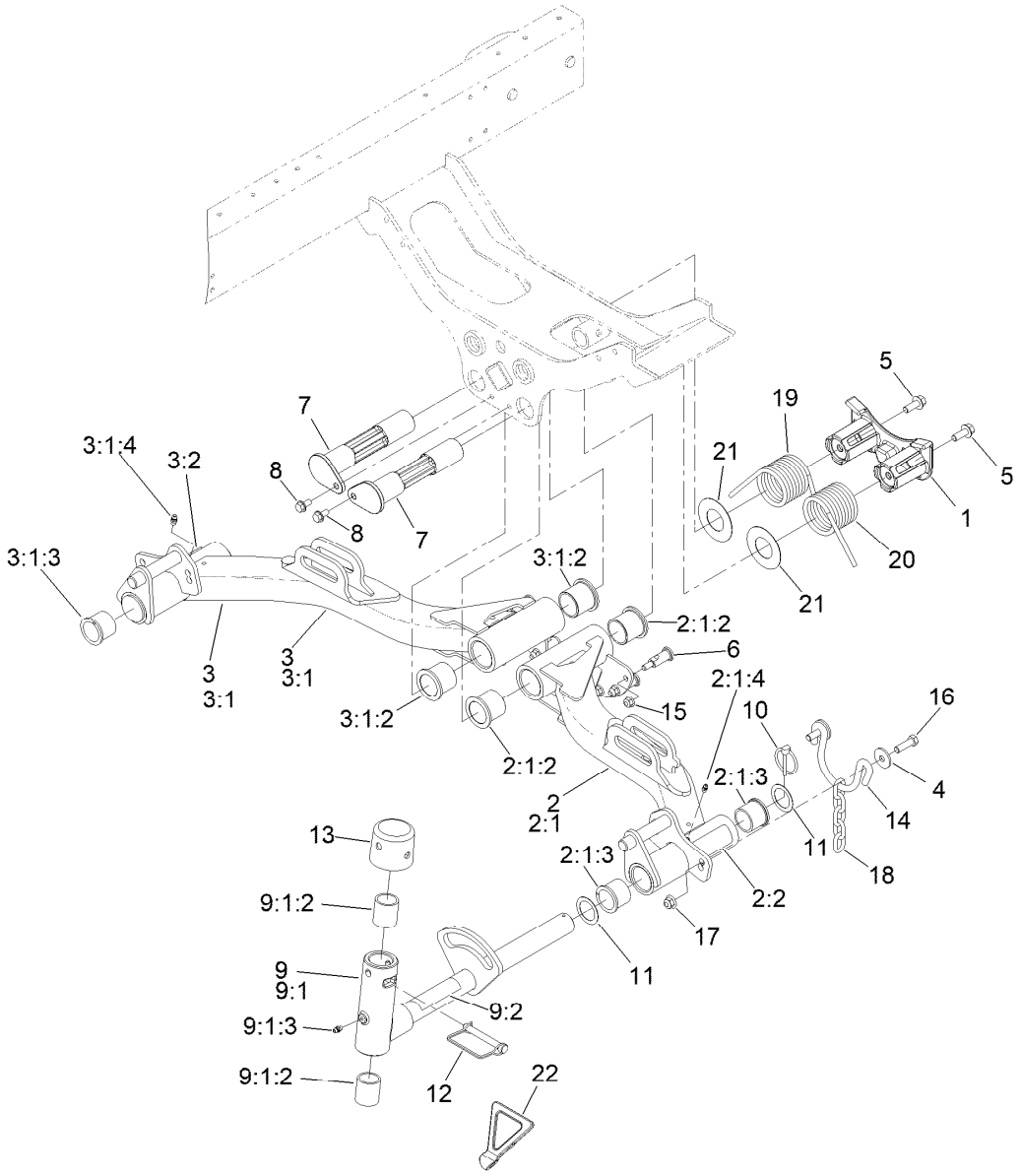

No. 2 and 3 Lift Arm Assembly

Ref.	Part Number	Qty.	Description
1	125-2018	1	Housing
2	136-8002	1	Lift Arm #2
2:1		1	Lift Arm ASM #2 ●
2:1:2	69-6470	2	Bushing-Caster
2:1:3	104-0015	2	Bushing-Flange
2:1:4	302-5	2	Fitting-Grease
2:2	93-6696	1	Decal-Warning
3	136-8003	1	Lift Arm #3
3:1		1	Lift Arm ASM #3 ●
3:1:2	69-6470	2	Bushing-Caster
3:1:3	104-0015	2	Bushing-Flange
3:1:4	302-5	2	Fitting-Grease
3:2	93-6696	1	Decal-Warning
4	63-8410	4	Washer
5	3234-11	2	Screw-HHF
6	120-6283	6	Stud-Shouldered
7	125-2037	2	Shaft
8	32144-14	2	Screw-HWHTF

Ref.	Part Number	Qty.	Description
9	138-1248	2	Pivot Yoke ASM
9:1		1	Yoke-Pivot ●
9:1:2	121-3187	2	Bushing
9:1:3	302-5	1	Fitting-Grease
9:2	110-9642	1	Decal-Warning
10	92-1298	2	Pin-Lynch
11	76-2980	4	Washer-Thrust
12	107-7400	2	Pin-Lynch
13	107-4027	2	Cap
14	110-0922	2	Hoop-Chain
15	104-8300	6	Nut-HF, NI
16	323-7	4	Screw-HH
17	104-8301	4	Nut-HF, NI
18	84-2451	2	Chain-Straight, 5 Link
19	99-5608-03	1	Spring-Torsion, RH
20	99-5609-03	1	Spring-Torsion, LH
21	110-5345	2	Washer
22	119-8010-03	1	Kickstand

● Not serviced separately

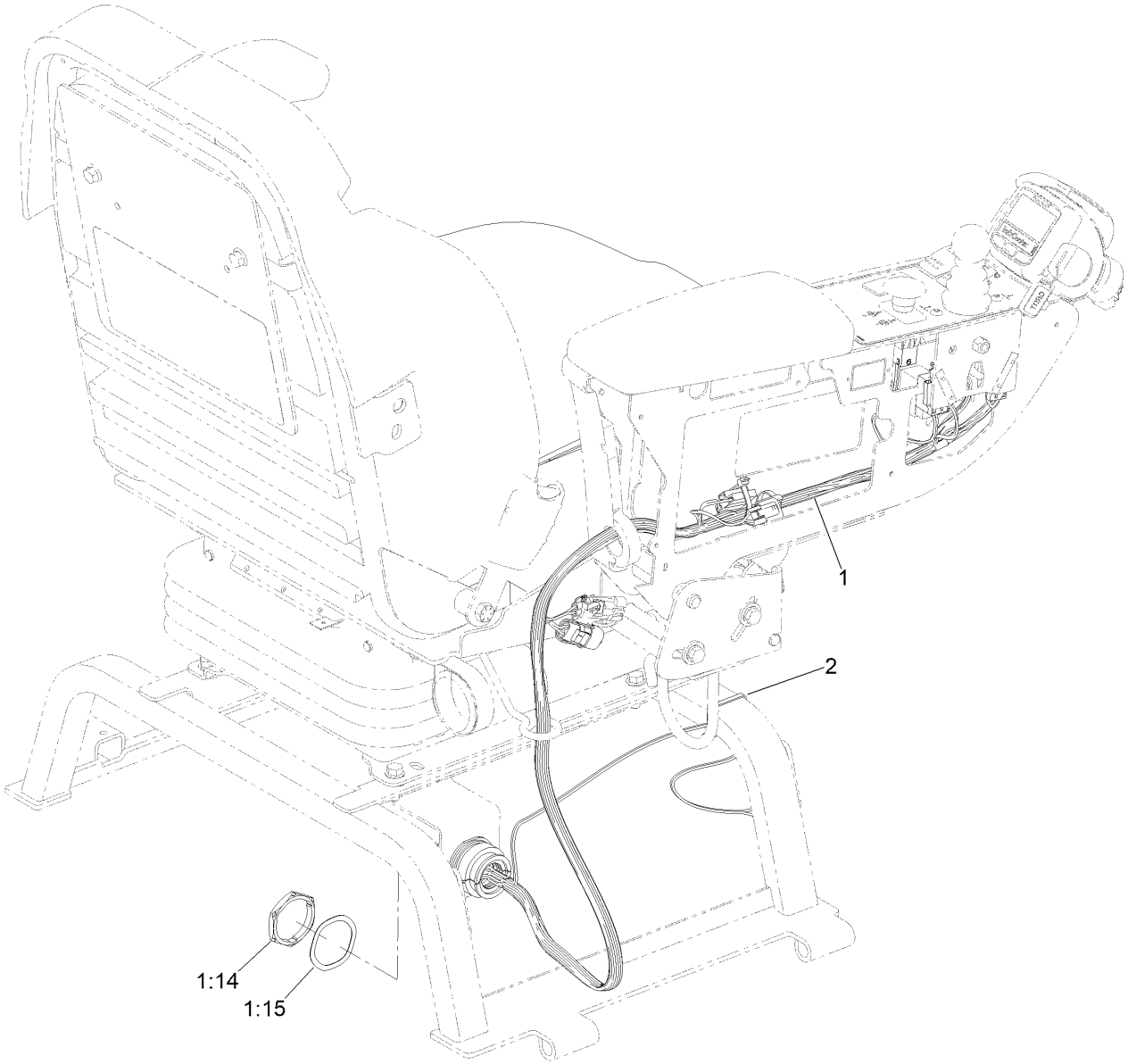

Seat and Control Arm Wiring Harness Assembly

Ref.	*Part Number*	*Qty.*	*Description*
1	122-2126	1	Harness-Wire, Seat
1:14	32180-135	1	Nut-Connector
1:15	32180-143	1	Washer-Lock
2	3290-378	1	Tie-Cable

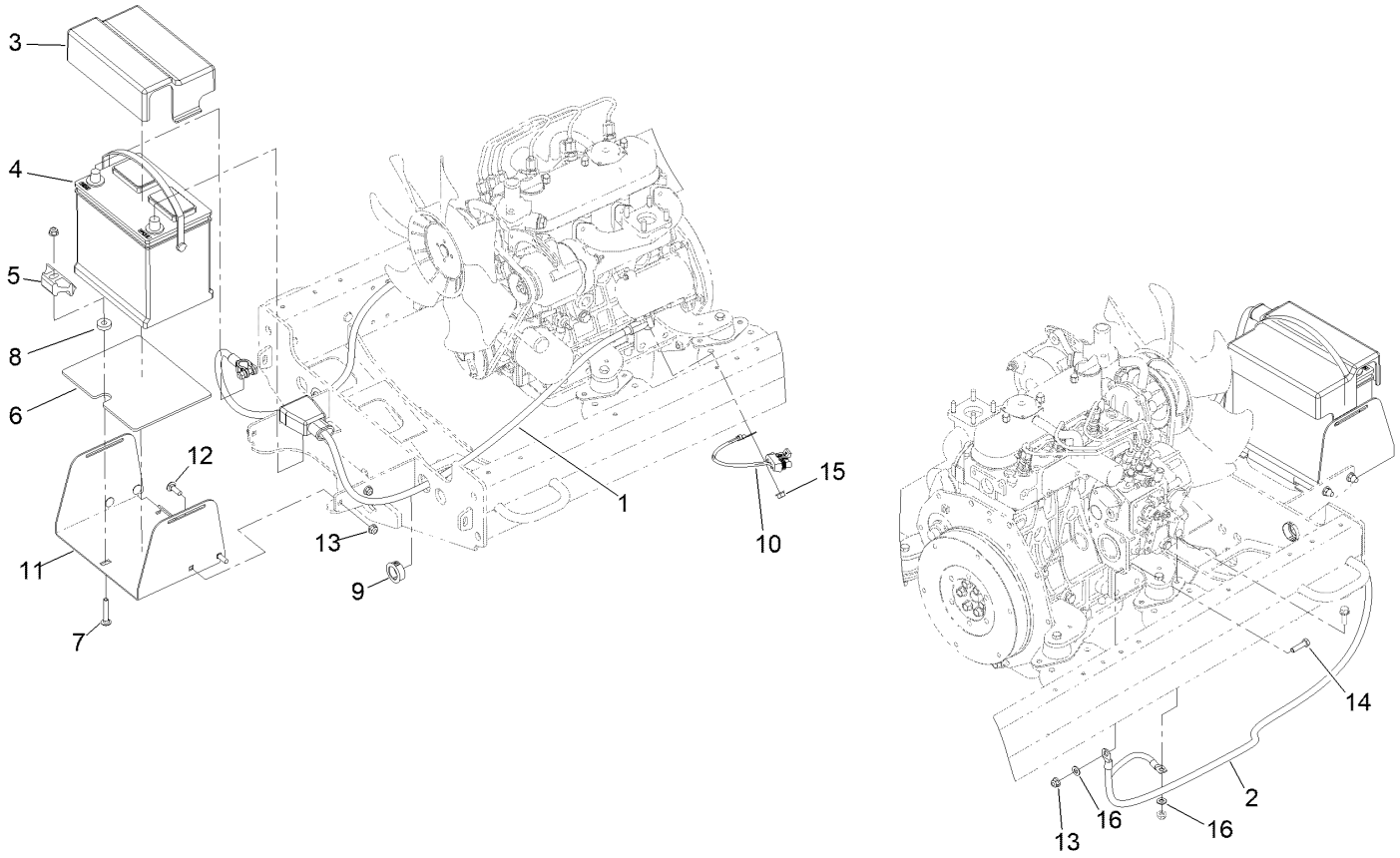

Battery Electrical Assembly

Ref.	Part Number	Qty.	Description
1	120-6398	1	Cable-Battery, Positive
2	120-6399	1	Cable-Battery, Negative
3	121-5615	1	Cover-Battery
4	132-8621	1	Battery - Corrosive
5	138-6335	1	Retainer-Battery
6	127-2781	1	Mat-Battery
7	3230-6	1	Bolt-CARR
8	62-6660	1	Spacer

Ref.	Part Number	Qty.	Description
9	32180-570	2	Bushing-Panel Snap,1.00"
10	99-3441	1	Harness-Wire, Fusible Link
11	125-1583-03	1	Tray-Battery
12	3230-2	4	Bolt-CARR
13	104-8300	6	Nut-HF, NI
14	322-6	1	Screw-HH
15	33004-00	1	Nut-HF
16	120-9683	2	Washer-Plain

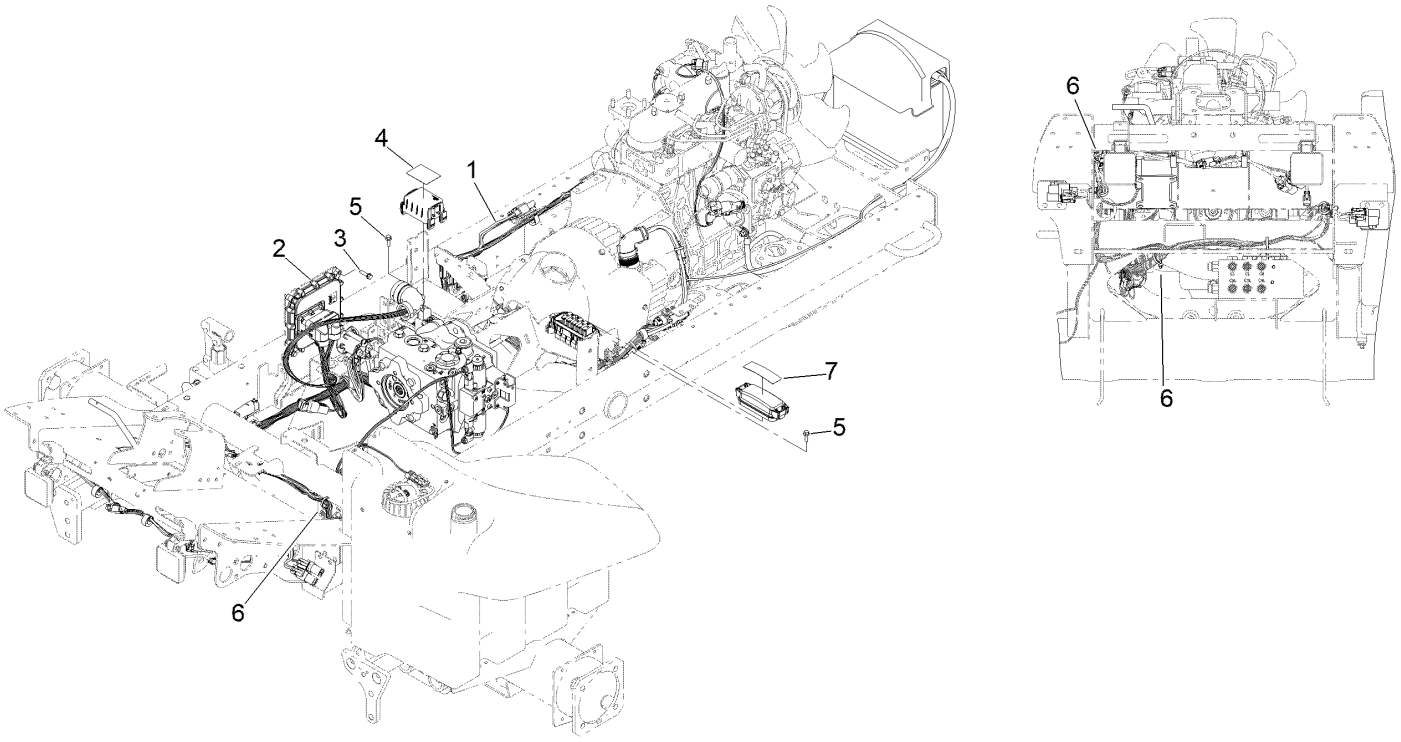

Electrical Assembly

Ref.	*Part Number*	*Qty.*	*Description*
1	122-2913	1	Harness-Wire, Main
2	127-2770	1	Controller
3	32144-86	4	Screw-HWHTF
4	145-2498	1	Decal-Fuse
5	33103-020	4	Screw-HHF
6	3290-378	3	Tie-Cable
7	127-2470	1	Decal-Fuses, Cu

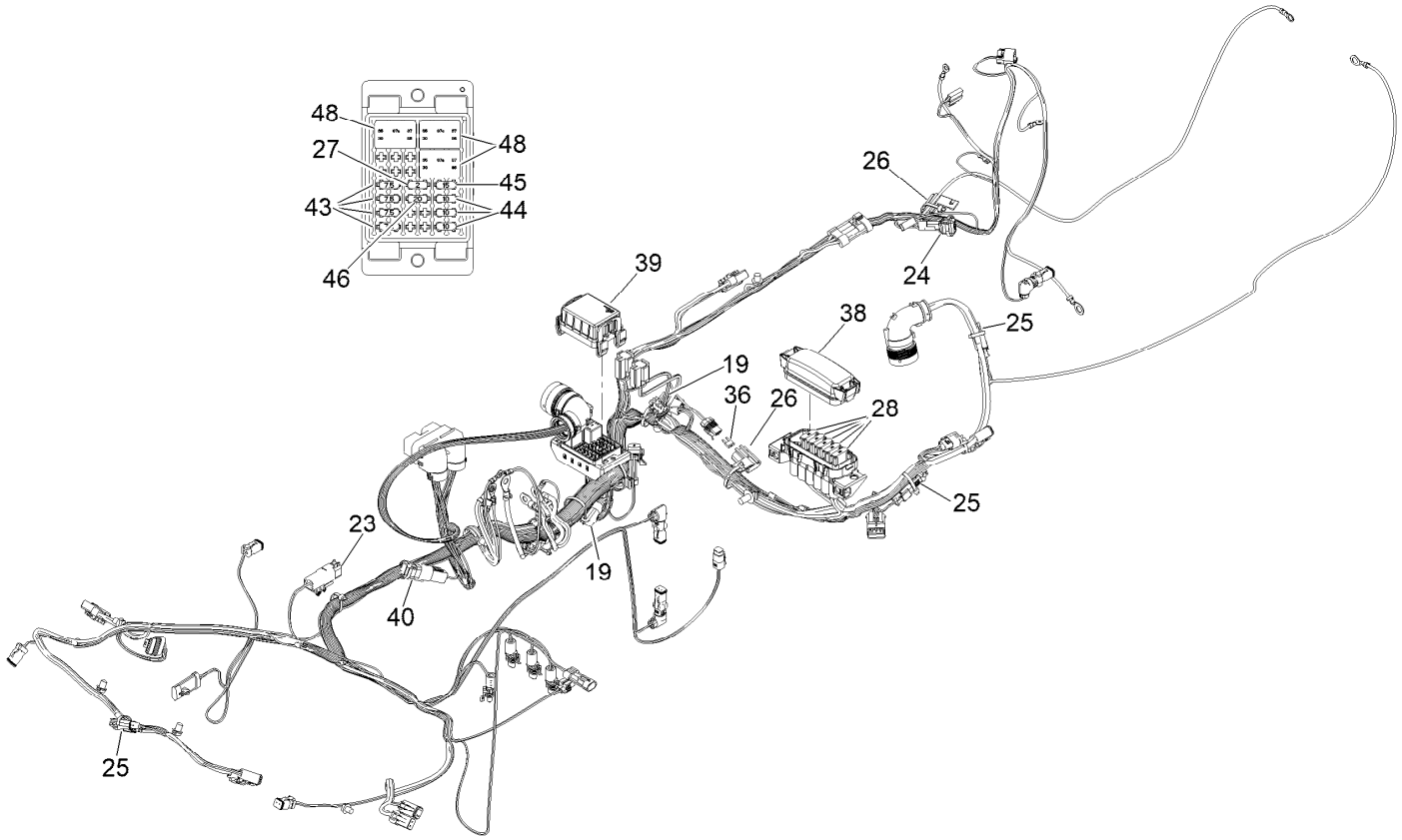

Wire Harness Assembly No. 122-2913

Ref.	Part Number	Qty.	Description
19	32180-156	3	Cap-Plug, 6 Way
23	119-7781	1	Diode-Sealed
24	100-4918	1	Diode
25	32180-282	3	Resistor-120 Ohm
26	32180-019	2	Cover-Fuse, Single
27	121-8861	1	Fuse-Mini Blade, 2 Amp
28	122-0255	5	Fuse-Maxi, 35 Amp-58V
36	122-0409	1	Fuse-Mini Blade, 10 Amp

Ref.	Part Number	Qty.	Description
38	32180-146	1	Cover-Fuse
39	32180-471	1	Cover-Chief, Bric
40	122-1131	1	Capacitor-Sealed
43	121-8865	4	Fuse-Mini Blade, 7.5 Amp
44	121-8866	3	Fuse-Mini Blade, 10 Amp
45	121-8867	1	Fuse-Mini Blade, 15 Amp
46	121-8868	1	Fuse-Mini Blade, 20 Amp
48	122-0368	3	Relay-280 ISO

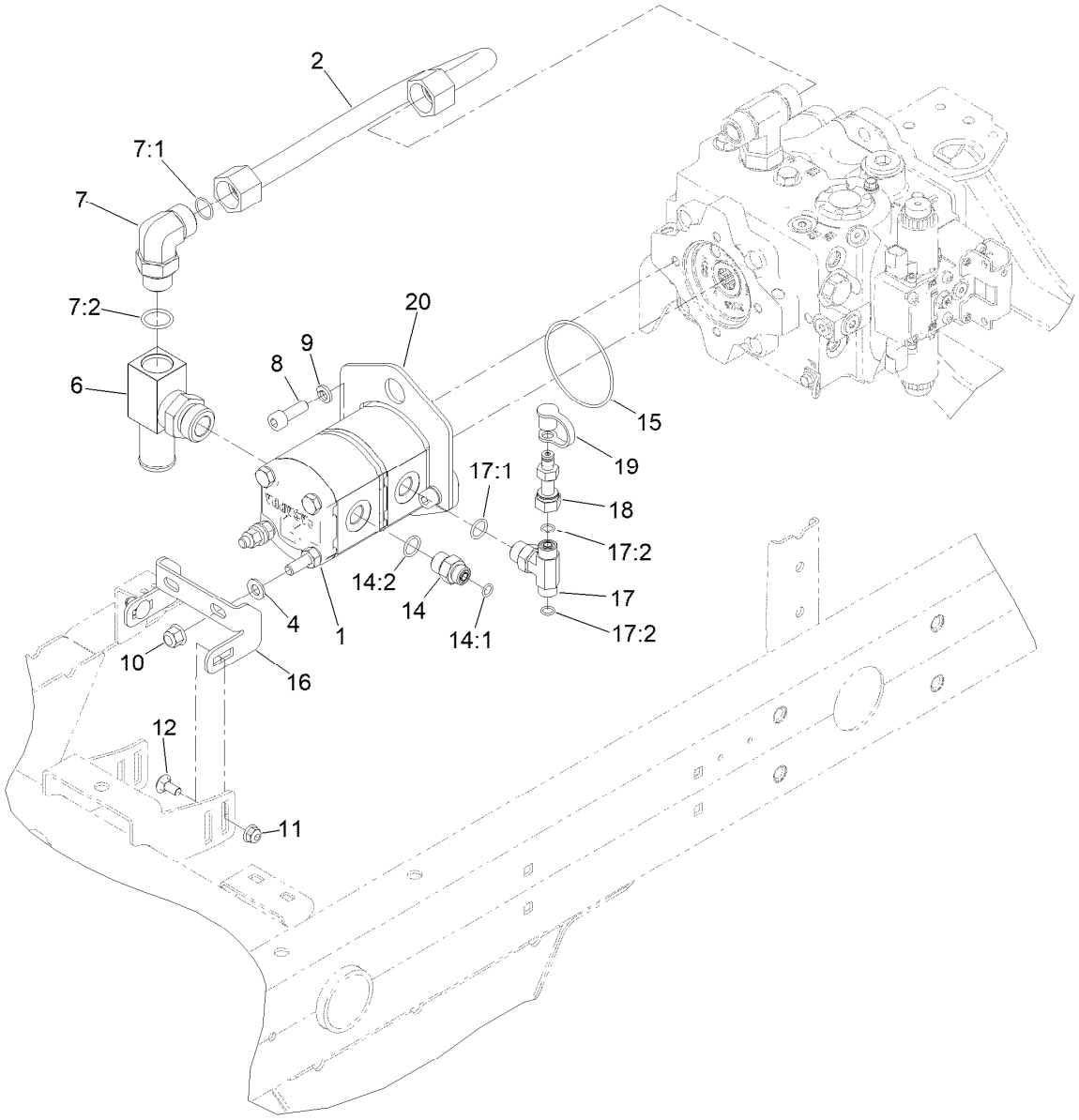

Gear Pump Assembly

Ref.	Part Number	Qty.	Description
1	125-1530	1	Tandem Gear Pump ASM
2	145-2556	1	Hydraulic Tube ASM
4	3256-24	2	Washer-Plain
6	145-2557	1	Manifold-Tube
7	340-142	1	Fitting-Elbow, 90 DEG
7:1	237-58	1	O-Ring
7:2	237-81	1	O-Ring
8	ST80801	2	Screw-HSH
9	48-9590	2	Washer-Lock
10	103-9511	2	Nut-Flg
11	104-8300	2	Nut-HF, NI
12	3230-1	2	Bolt-CARR

Ref.	Part Number	Qty.	Description
14	340-3	1	Fitting-Straight
14:1	237-22	1	O-Ring
14:2	237-79	1	O-Ring
15	237-161	1	O-Ring
16	133-2946-0P	1	Brkt-Gear Pump
17	92-4799	1	Fitting-Tee, HYD
17:1	237-79	1	O-Ring
17:2	237-22	2	O-Ring
18	86-5480	1	Nipple-Test
19	354-79	1	Cap-Dust
20	145-2548-0P	1	Bracket-Lift, Pump

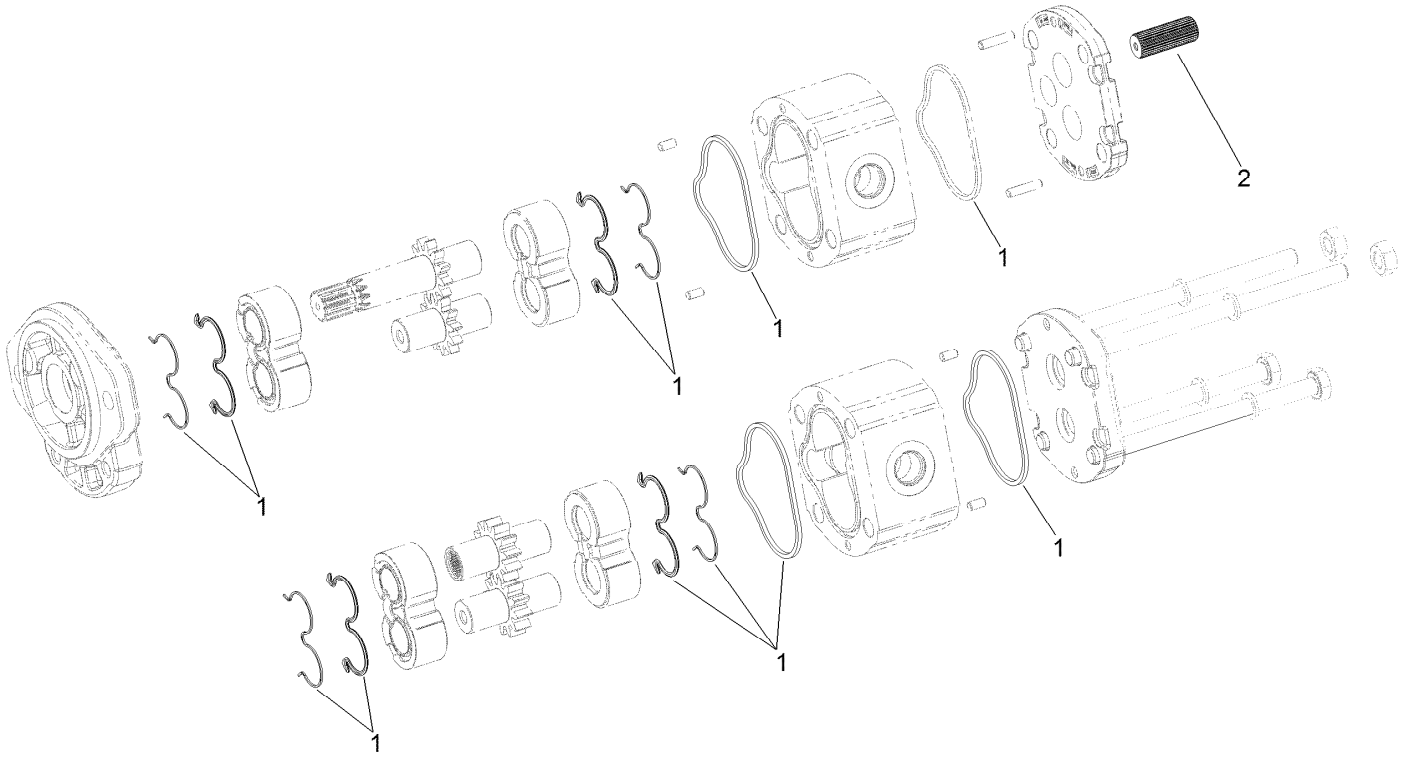

Tandem Gear Pump Assembly No. 125-1530

Ref.	*Part Number*	*Qty.*	*Description*
1	120-5155	1	Seal Kit
2	120-6284	1	Hub-Connecting

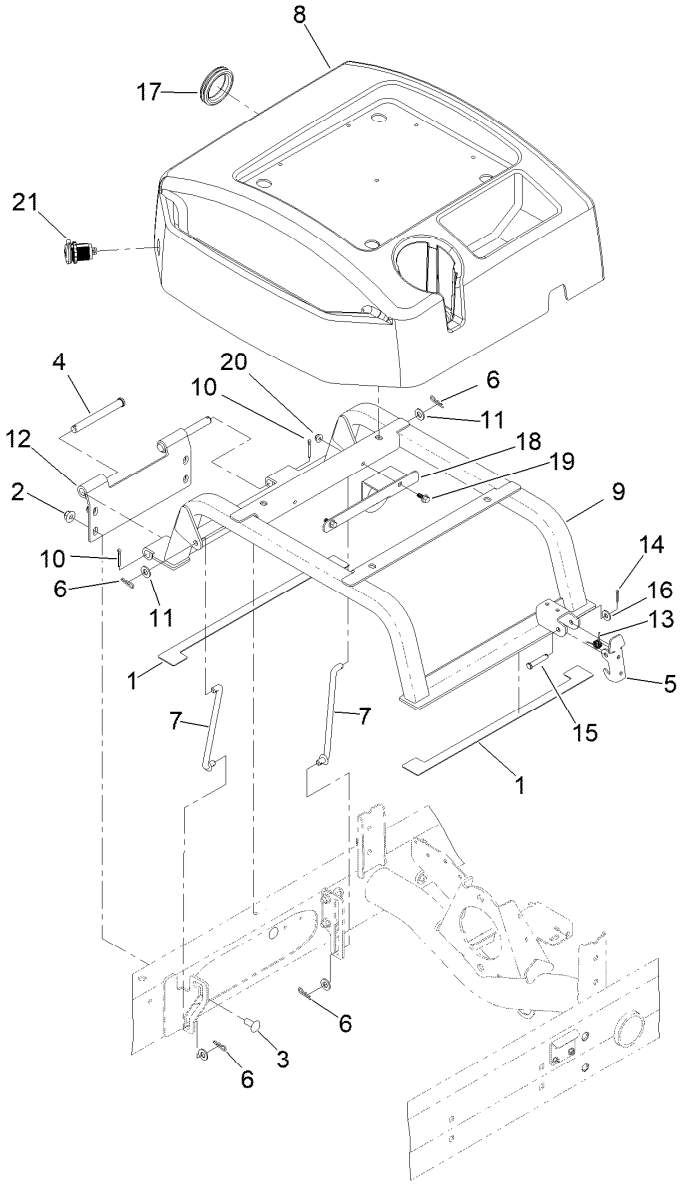

Seat Base Assembly

Ref.	Part Number	Qty.	Description
1	110-5255	2	Bumper-Base, Seat
2	104-8301	4	Nut-HF, NI
3	3231-27	4	Screw-CARR
4	283-83	2	Pin-Clevis
5	110-8971	1	Latch
6	3290-307	4	Pin-Cotter
7	98-0917	2	Rod-Prop
8	145-2450	1	Cover-Seatbase
9	125-2122-03	1	Seat Base ASM
10	3272-11	2	Pin-Cotter
11	3256-24	4	Washer-Plain

Ref.	Part Number	Qty.	Description
12	125-2121-03	1	Hinge-Seatbase
13	104-4821	1	Spring-Torsion
14	3272-6	1	Pin-Cotter
15	94-3829	1	Pin-Clevis
16	3256-2	1	Washer-Flat
17	240-12	1	Grommet-Rubber
18	145-2480-0P	1	Bracket-Harness
19	99-6810	2	Screw-HHF
20	104-7201	2	Nut-HF, NI
21	131-8388	1	Socket-USB

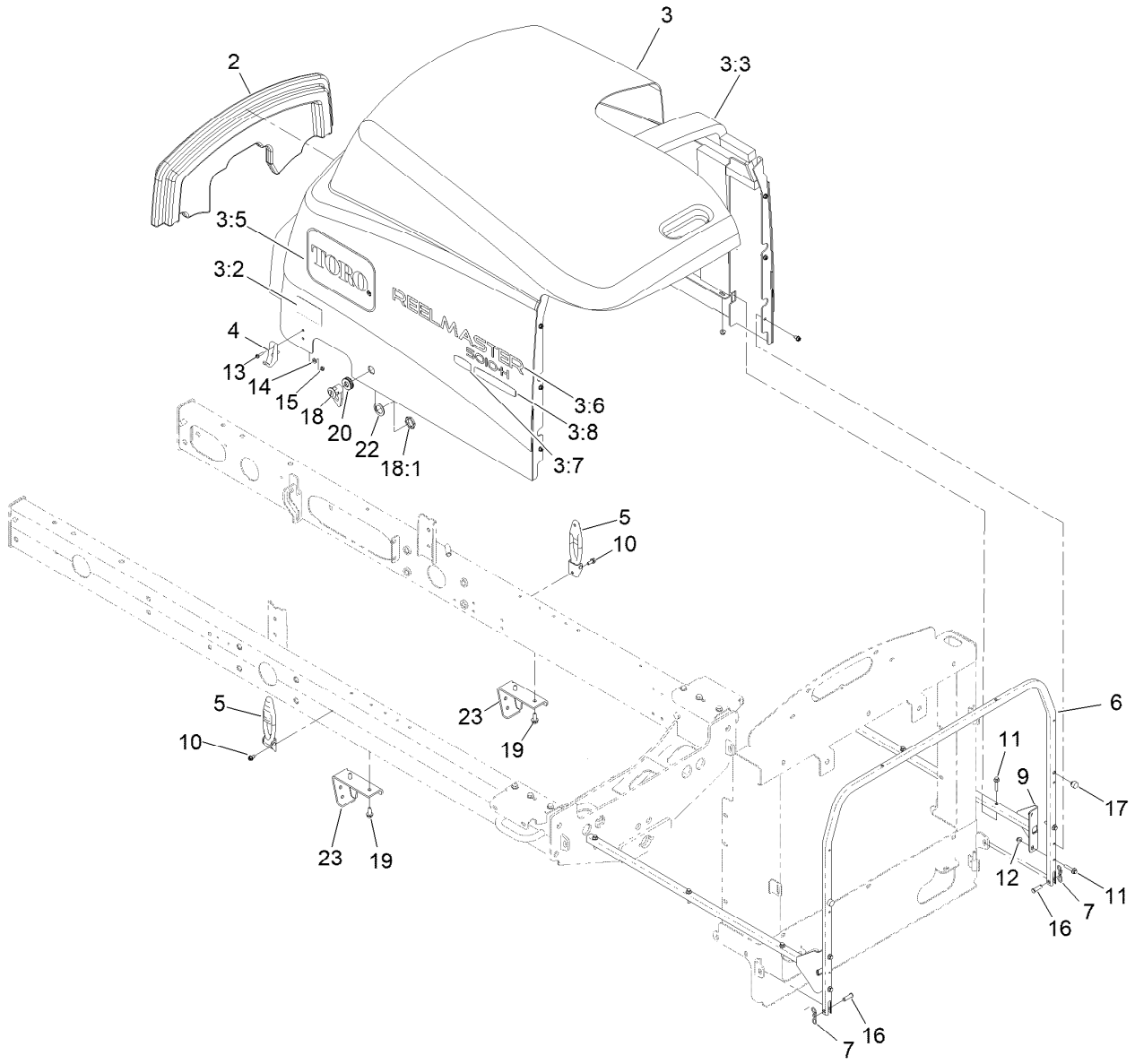

Hood Assembly

Ref.	Part Number	Qty.	Description
2	145-2456	1	Saddle-Hood
3	145-2536	1	Hood ASM (Rm5010-H Service)
3:2	106-6754	2	Decal-Danger
3:3	110-5252	1	Foam-Sealed
3:4	110-9002	1	Foil Tape Kit ●
3:5	66-6140	2	Decal
3:6	127-2304	2	Decal
3:7	119-7580	2	Decal-Smart, Energy
3:8	121-1594	2	Decal-Smart Power
4	103-2897	2	Latch-Catch
5	103-2898	2	Latch-Rubber
6	125-8819-03	1	Tube-Frame, Hood
7	105-7512	2	Pin-Tie, Bow
9	108-1790-03	2	Tube
10	32104-17	8	Screw-HWH
11	3234-21	10	Screw-HHF
12	104-7201	10	Nut-HF, NI
13	32105-13	4	Screw-HWH
14	3256-14	4	Washer-Flat
15	3296-12	4	Nut-Lock, NI
16	283-61	2	Pin-Yoke
17	107-8042	2	Bumper-Rubber
18	98-5398	1	Latch
18:1	3218-20	1	Nut-Jam ●
19	32104-32	4	Screw-HWH
20	104-1453	1	Grommet
22	99-4958	1	Spacer
23	110-0979-03	2	Bracket-Deflector

● Not illustrated

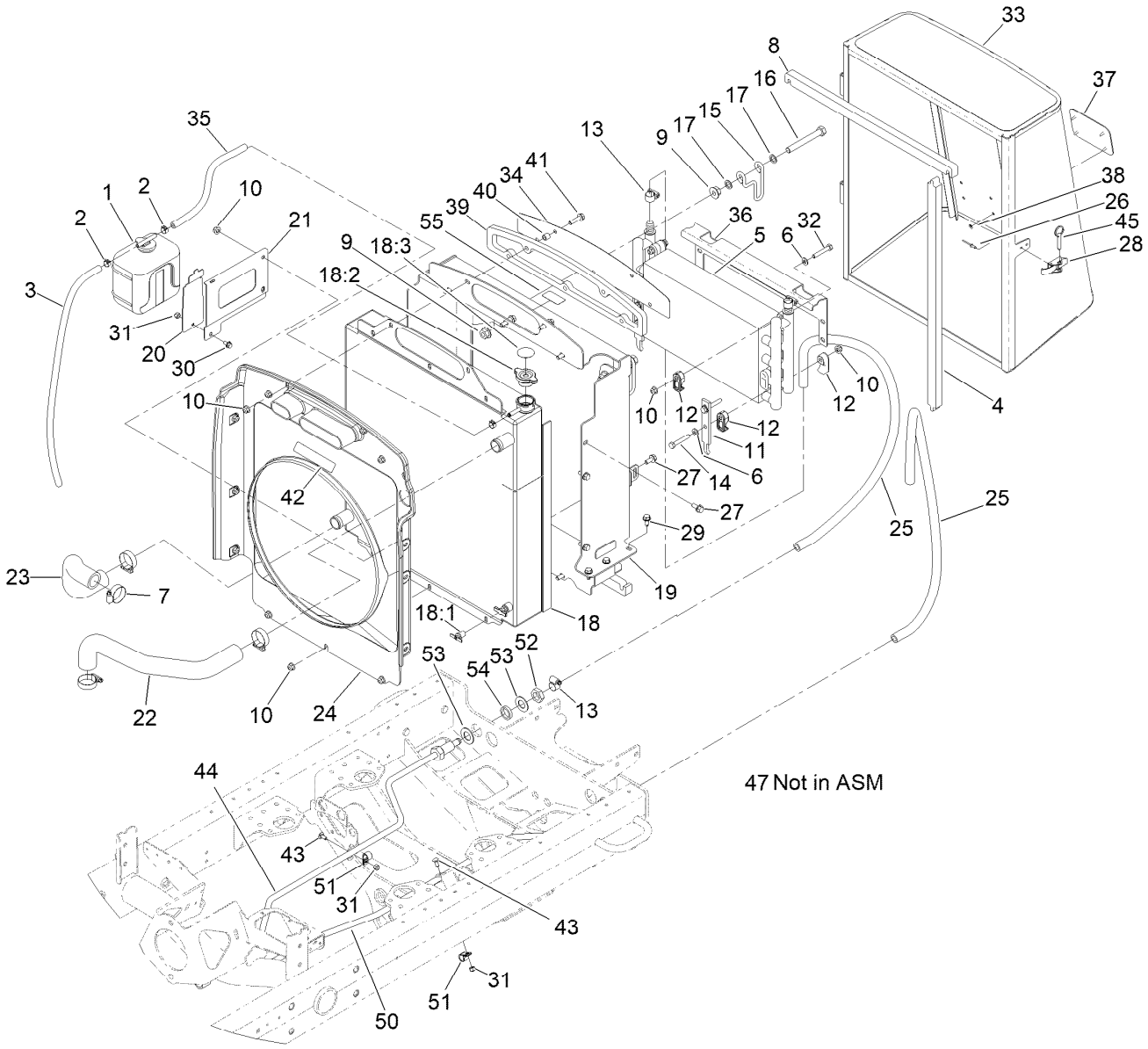

Radiator Assembly

Ref.	Part Number	Qty.	Description
1	108-0638	1	Bottle-Overflow
2	92-2379	3	Clamp-Hose
3	110-3257	1	Hose-Fuel
4	110-0967	2	Seal-Foam
5	127-2480	1	Cooler-Oil
6	3256-23	8	Washer-Plain
7	2412-3	4	Clamp-Hose
8	110-0968	2	Seal-Foam
9	32128-49	4	Nut-HHF
10	104-8300	22	Nut-HF, NI
11	104-5460-03	2	Plate-Mount, Oil Cooler
12	105-3943	16	Clamp-Cooler, Oil
13	2412-119	4	Clamp-Hose
14	322-10	4	Screw-HH
15	104-5429	2	Clamp-Form, Wire
16	325-17	2	Screw-HH
17	41-8440	4	Washer
18	119-6956	1	Radiator ASM
18:1	304-46	1	Draincock
18:2	93-5957	1	Cap-Radiator
18:3	106-6755	1	Decal-Cap, Radiator

Ref.	Part Number	Qty.	Description
19	127-2665-03	1	Frame-Support, Radiator
20	108-1665-0P	1	Bracket - Reservior
21	108-1666-0P	1	Bracket - Reservoir
22	108-1696	1	Hose-Formed
23	108-1697	1	Hose-Formed
24	127-2474	1	Shroud-Fan
25	127-2346	2	Hose
26	3269-15	2	Rivet-Pop
27	3234-5	9	Screw-HHF
28	115-1554	1	Latch-Draw
29	32104-32	6	Screw-HWH
30	3234-13	1	Screw-HHF
31	3296-42	3	Nut-Lock, NI
32	322-21	4	Screw-HH
33	110-0952-03	1	Screen ASM
34	108-1843-0P	1	Screen - Air Intake
35	110-4104	1	Hose-Fuel
36	107-2043-03	1	Bracket-Oil Cooler, Top
37	93-6028	1	Plate-Logo
38	138-6996	4	Nut-Push
39	110-5324	1	Seal-Foam

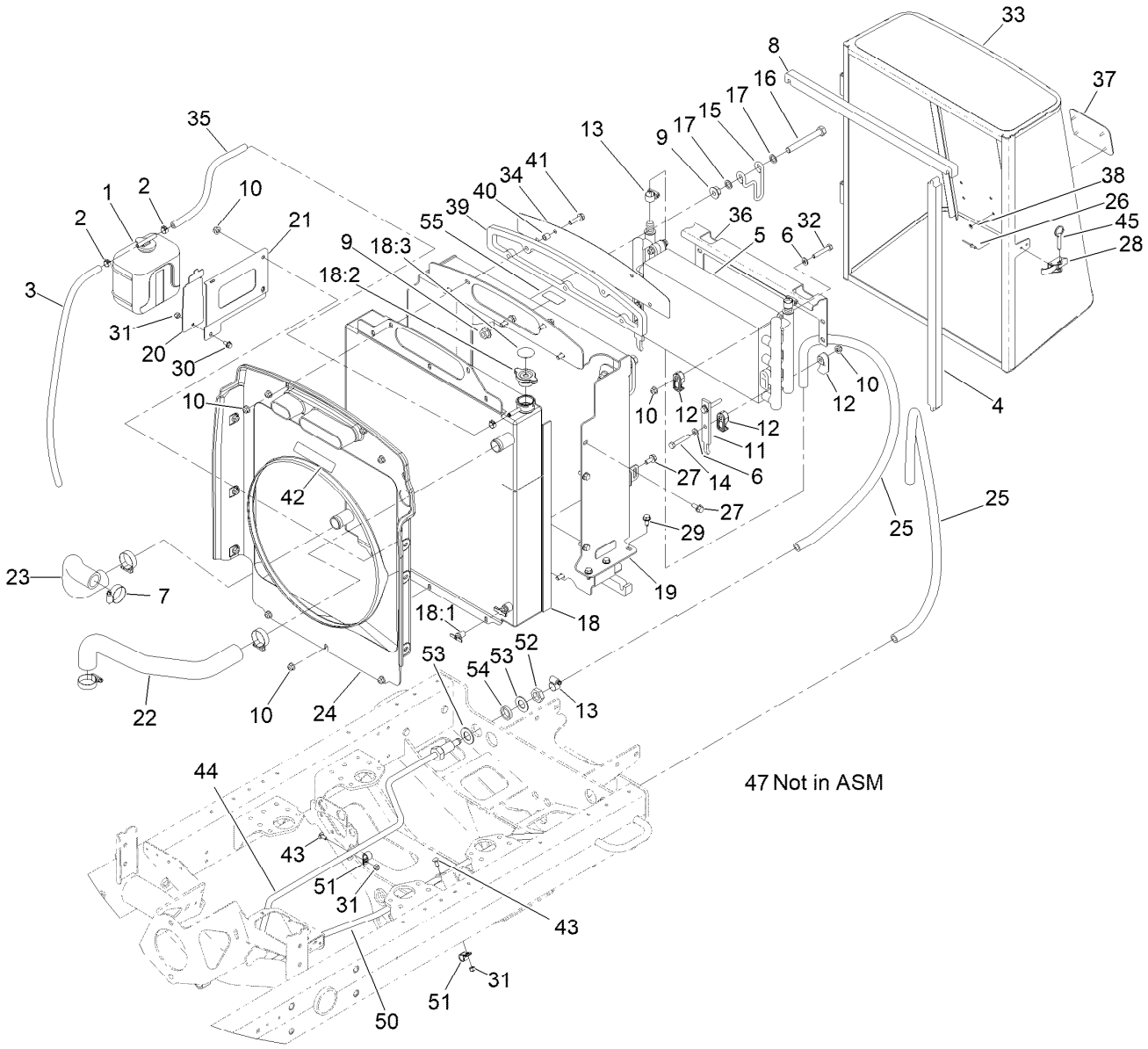

Radiator Assembly (continued)

Ref.	Part Number	Qty.	Description
40	1-603903	5	Spacer
41	3234-36	5	Screw-HHF
42	93-7272	1	Decal-Warning
43	3229-11	2	Screw-CARR
44	145-2571	1	Hydraulic Tube ASM
45	115-1556	1	Pin-Ball, Detent
47	110-0971	2	Seal-Foam

Ref.	Part Number	Qty.	Description
50	127-2475	1	Tube ASM
51	2412-73	2	Clamp-R
52	340-127	2	Nut-Bulkhead
53	69-8930	4	Washer
54	127-2344	2	Spacer
55	137-8127	1	Decal-No Spray

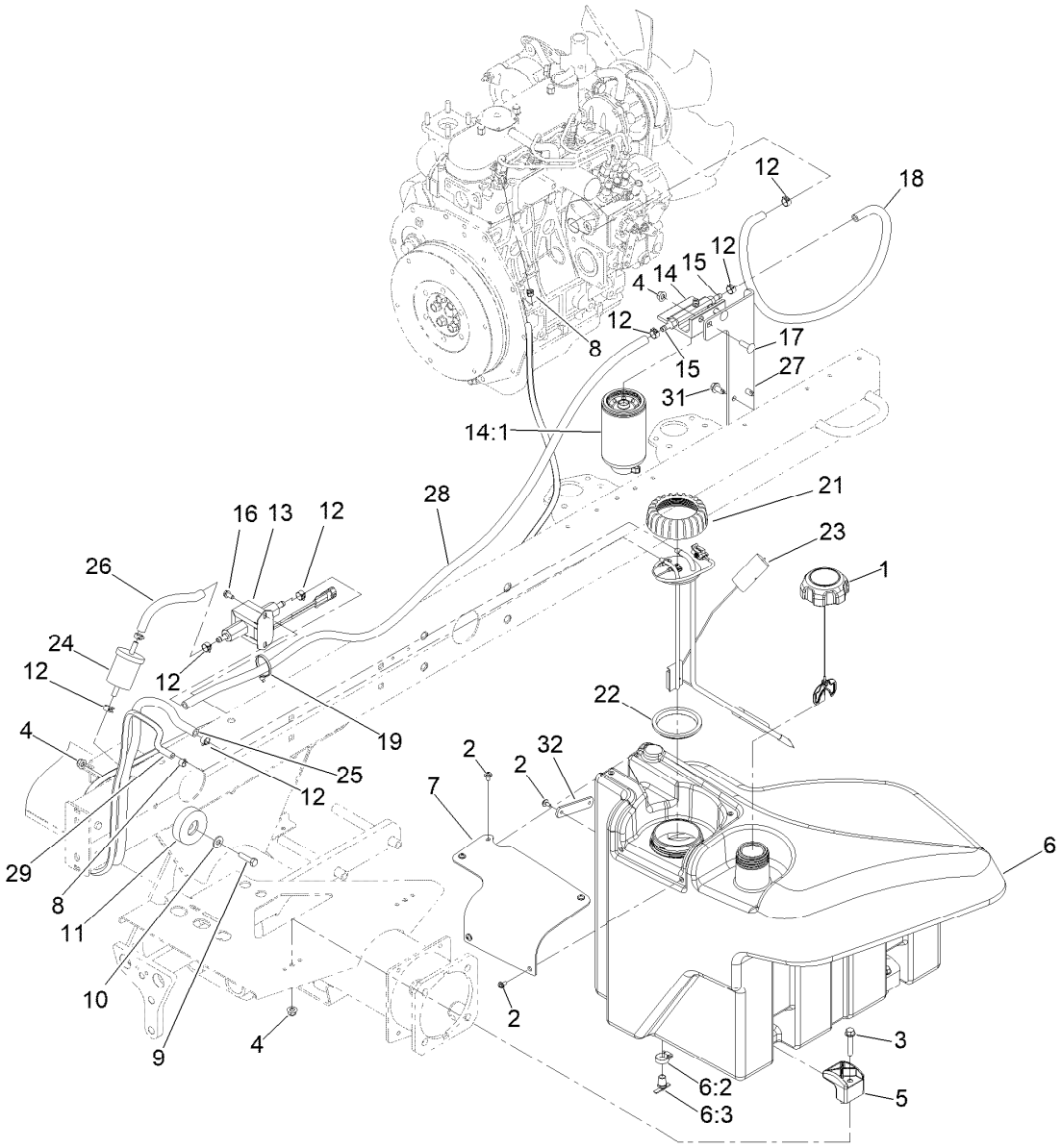

Fuel System Assembly

Ref.	Part Number	Qty.	Description
1	117-5894	1	Fuel Cap ASM
2	109-2661	7	Screw-PPH
3	94-5780	2	Screw-HWH
4	104-8300	5	Nut-HF, NI
5	107-4543	2	Clamp
6	125-2907	1	Fuel Tank ASM
6:2	2412-36	1	Clamp-Hose
6:3	304-46	1	Draincock
7	125-2903	1	Cover-Pump/Sender
8	2412-80	2	Clamp-Hose
9	322-6	1	Screw-HH
10	3256-3	1	Washer-Flat
11	108-1605	1	Bumper-Recess
12	92-2379	8	Clamp-Hose
13	145-3160	1	Pump-Fuel, Electric
14	110-9044	1	Separator-Filter
14:1	110-9049	1	Filter-Spin On, Fuel/Water

Ref.	Part Number	Qty.	Description
15	353-783	2	Fitting-STR
16	32144-4	1	Screw-HWH
17	3230-22	2	Screw-CARR
18	109-0309	1	Hose-Fuel
19	3290-378	3	Tie-Cable
21	115-2162	1	Cap-Pump, Fuel
22	115-2163	1	Gasket-Pump, Fuel
23	121-5642	1	Sender-Fuel
24	98-7612	1	Filter-Fuel
25	110-3257	1	Hose-Fuel
26	112-2386	1	Hose-Fuel
27	110-8968-0P	1	Mount-Water Separator
28	110-3259	1	Hose-Fuel
29	125-8808	1	Hose-Fuel
31	32104-32	4	Screw-HWH
32	125-2945	1	Strap-Cable

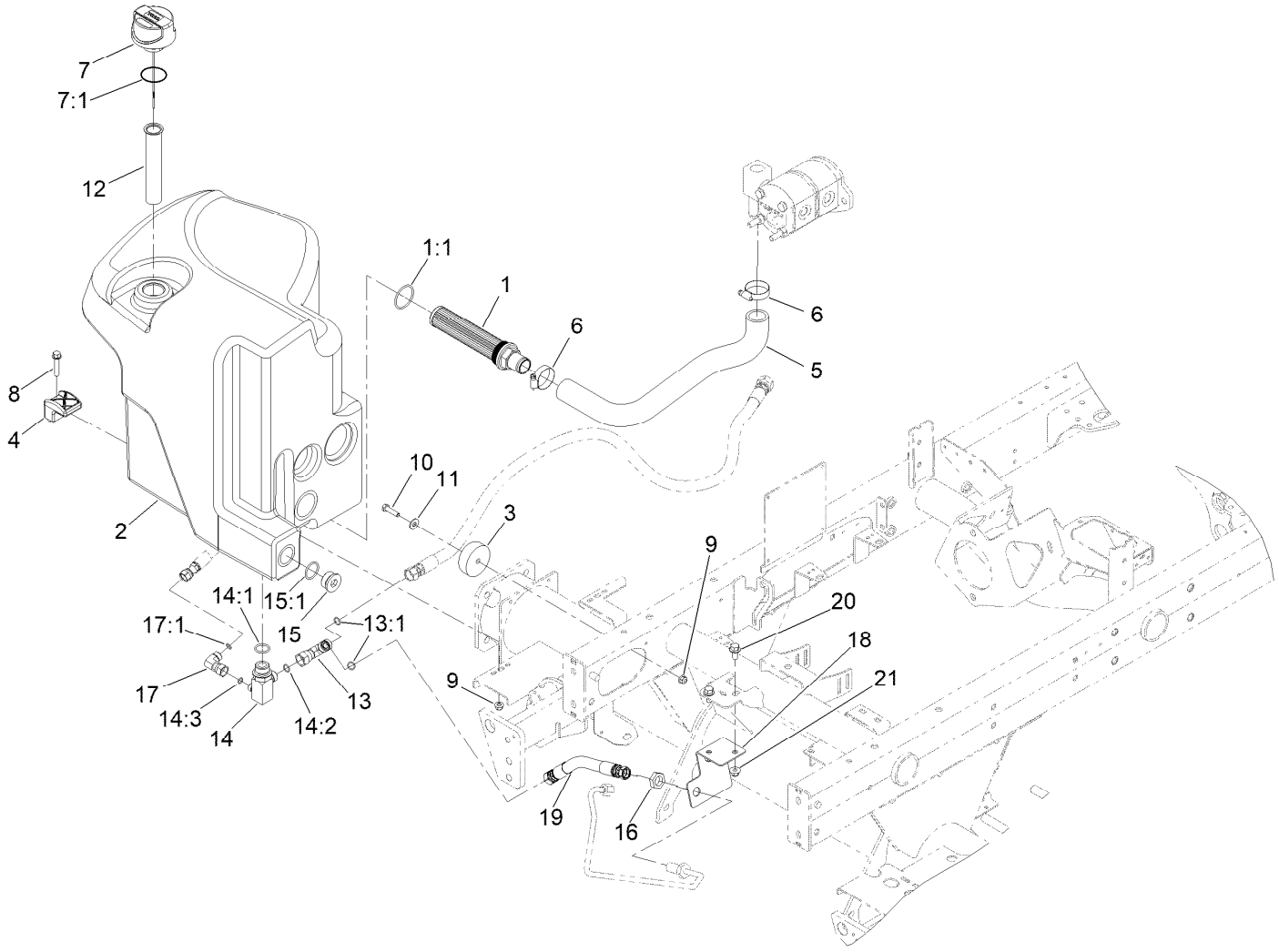

Hydraulic Tank Assembly

Ref.	Part Number	Qty.	Description
1	145-2463	1	Strainer-Tank, Hydraulic
1:1	340-136	1	O-Ring
2	145-2487	1	Tank-Hydraulic
3	108-1605	1	Bumper-Recess
4	107-4543	2	Clamp
5	144-2076	1	Hose-Suction
6	2412-3	2	Clamp-Hose
7	117-0193	1	Cap-Hydraulic, Vented Breather
7:1	237-101	1	O-Ring
8	94-5780	2	Screw-HWH
9	104-8300	3	Nut-HF, NI
10	322-6	1	Screw-HH
11	3256-3	1	Washer-Flat
12	61-2790	1	Filter-Screen

Ref.	Part Number	Qty.	Description
13	340-104	1	Fitting-Tee
13:1	237-30	2	O-Ring
14	144-2080	1	Fitting-Manifold
14:1	237-81	1	O-Ring
14:2	237-30	1	O-Ring
14:3	237-22	1	O-Ring
15	105-3921	1	Fitting-Plug
15:1	237-146	1	O-Ring
16	340-127	1	Nut-Bulkhead
17	340-159	1	Elbow-90
17:1	237-22	2	O-Ring
18	145-2496-0P	1	Bracket-Bulkhead, Return
19	145-2488	1	Hose ASM-Hydraulic
20	3234-1	2	Screw-HHF
21	104-8301	2	Nut-HF, NI

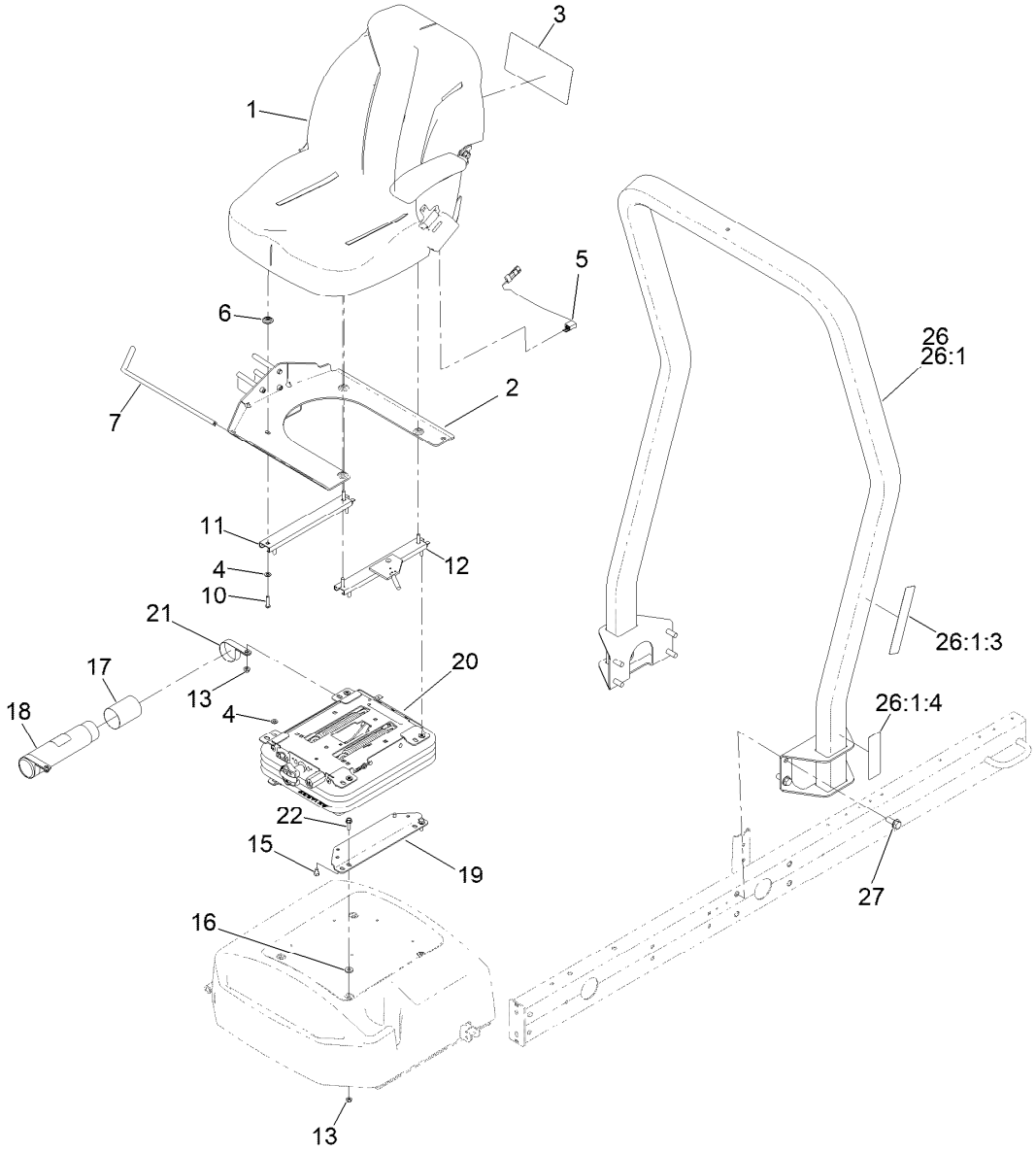

Seat and Roll-Over Protection System Assembly

Ref.	Part Number	Qty.	Description
1	139-2700	1	Seat ASM
2	138-6985-03	1	Mount-Seat
3	145-2572	1	Decal-Service
4	3256-23	8	Washer-Plain
5	108-8657	1	Harness-Wire, Seat
6	136-9002	4	Spacer-Mounting
7	130-7100	1	Trim-Seatbase
10	3290-511	4	Screw-HSBH
11	92-8990	1	Adjuster-Seat, Non-Locking
12	92-8991	1	Adjuster (W/Latch)
13	104-8300	8	Nut-HF, NI
15	48-7680	4	Screw-HH

Ref.	Part Number	Qty.	Description
16	71-9310	4	Spacer
17	104-7048	1	Cap-Housing
18	104-7050	1	Tube-Manual
19	108-6590-0P	2	Bracket-Seat, Lower
20	145-5295	1	Suspension ASM
21	2412-133	2	Clamp-R
22	3234-17	4	Screw-HHF
26	136-7954	1	ROPS ASM
26:1		1	ROPS ASM ●
26:1:3	136-3702	1	Decal-Safety, ROPS
26:1:4	136-2159	1	Decal-Seat Service
27	3234-38	8	Screw-HHF

● Not serviced separately

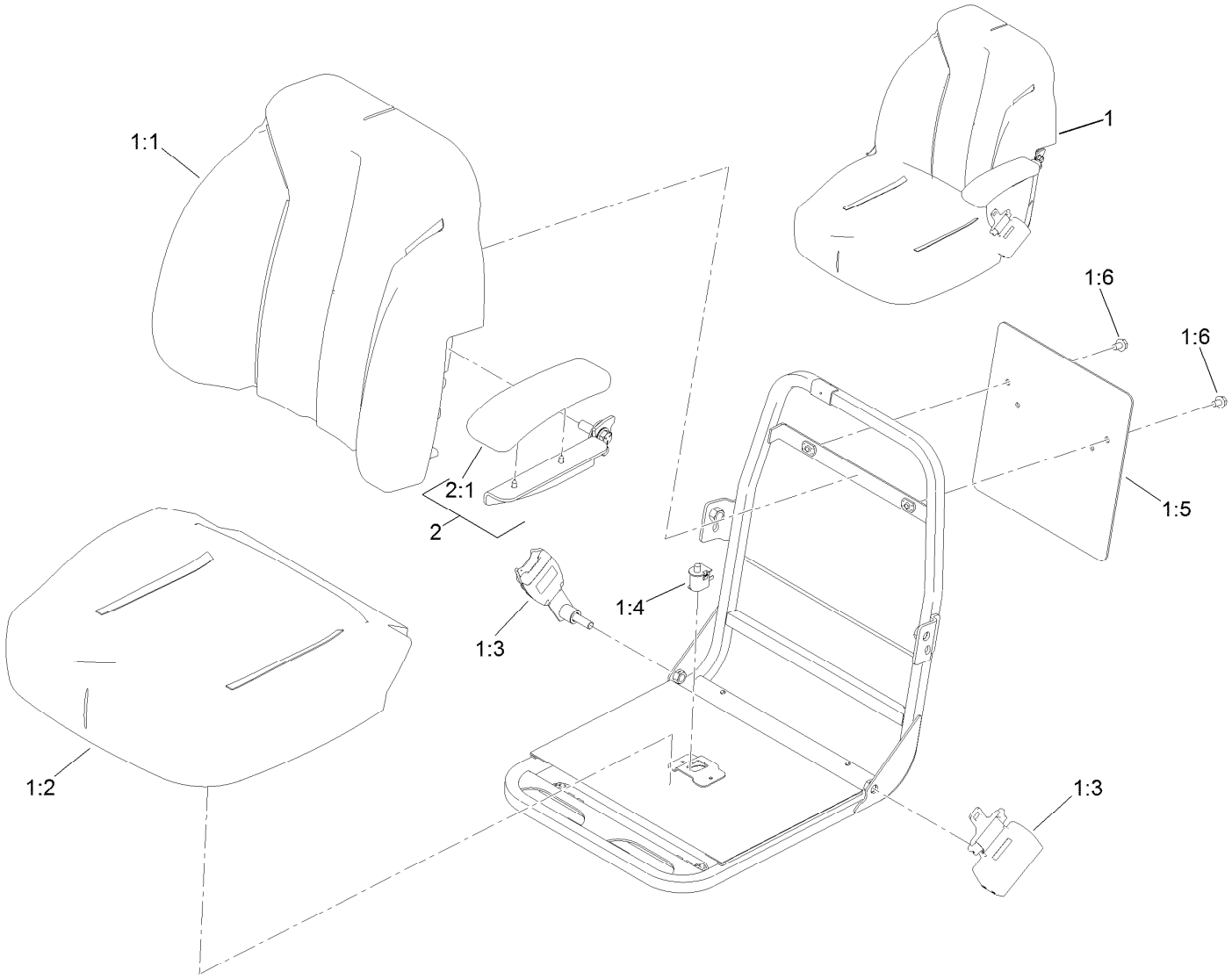

Seat Assembly No. 139-2700

Ref.	*Part Number*	*Qty.*	*Description*
1	139-2680	1	Seat ASM
1:1	145-0083	1	Cover-Seat, Back
1:2	145-0084	1	Cover-Seat, Bottom
1:3	139-2707	1	Seat Belt Kit
1:4	82-2190	1	Switch-Bail
1:5	139-2701	1	Plate-Decal
1:6	3234-30	2	Screw-HHF
2	121-3660	1	LH Arm Rest Kit
2:1	110-4163	1	Cushion-Rest, Arm

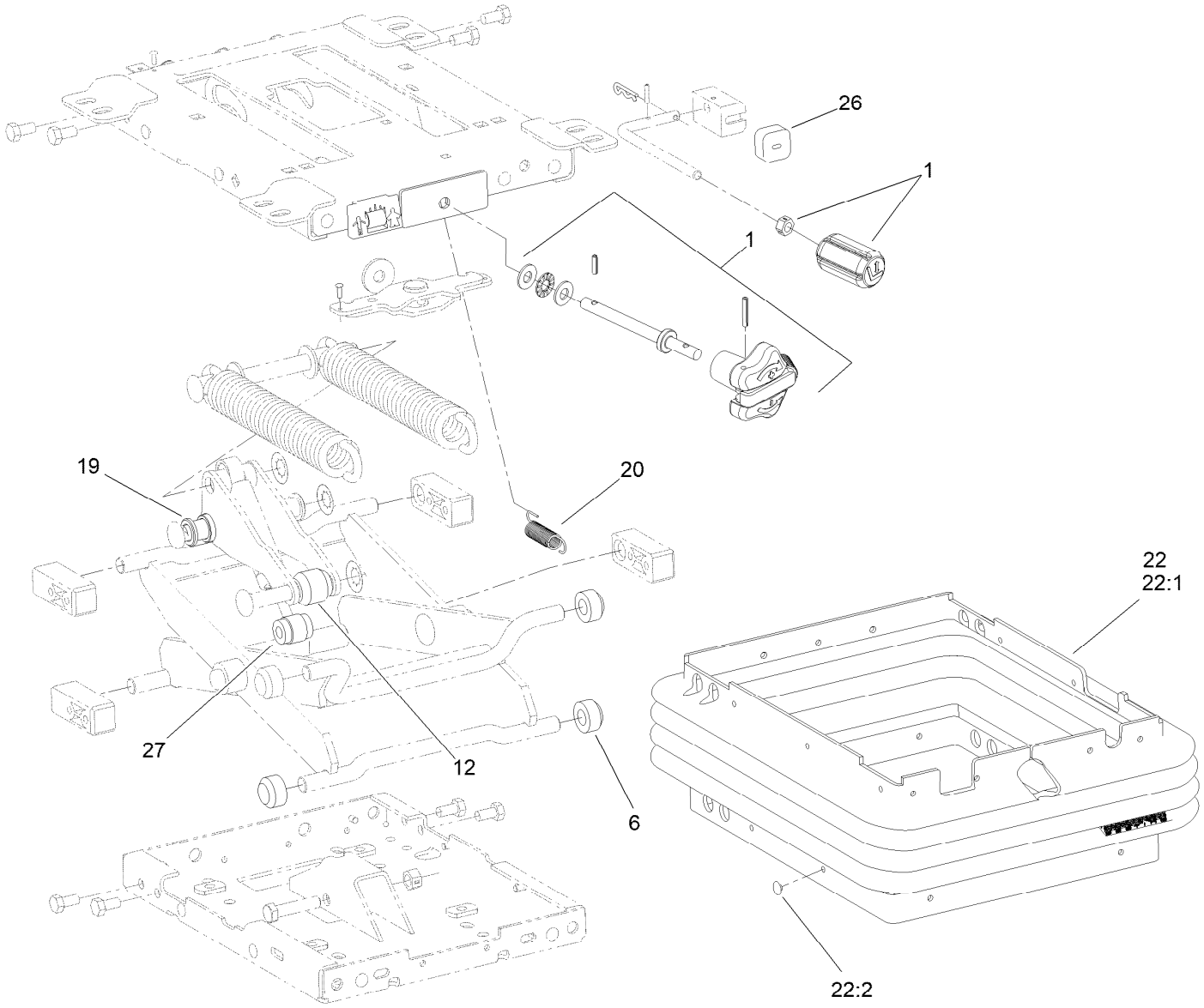

Mechanical Seat Suspension Assembly No. 145-5295

Ref.	*Part Number*	*Qty.*	*Description*
1	145-5296	1	Knob Service Kit
6	108-9632	4	Roller
12	145-5297	1	Roller-Plastic, 36MM
19	108-9622	2	Tube
20	108-9633	1	Spring-Extension
22	112-0164	1	Boot Kit
22:1		1	Boot-Suspension ●
22:2	108-9641	21	Clip-Plug
26	108-9634	1	Bumper
27	108-9614	1	Damper

● Not serviced separately

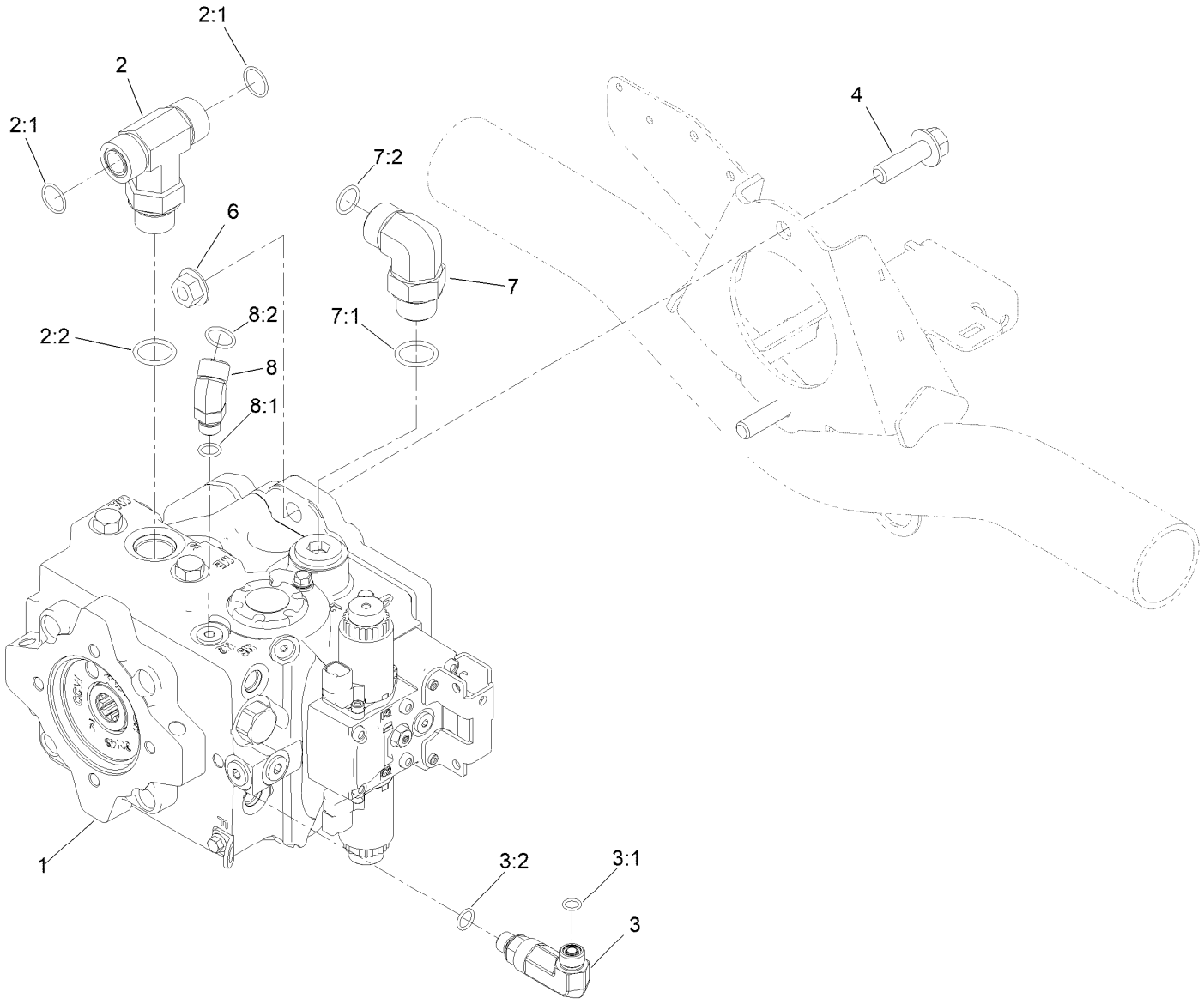

Traction Pump Mounting Assembly

Ref.	*Part Number*	*Qty.*	*Description*
1	144-2060	1	Pump-Hydraulic
2	104-4836	1	Fitting-Tee
2:1	237-58	2	O-Ring
2:2	237-81	1	O-Ring
3	340-5	1	Fitting-Straight
3:1	237-42	1	O-Ring
3:2	237-30	1	O-Ring
4	130-6481	2	Screw-HHF
6	32128-49	2	Nut-HHF
7	340-139	1	Fitting-Elbow 90
7:1	237-81	1	O-Ring
7:2	237-65	1	O-Ring
8	340-96	1	Adapter
8:1	237-30	1	O-Ring
8:2	237-42	1	O-Ring

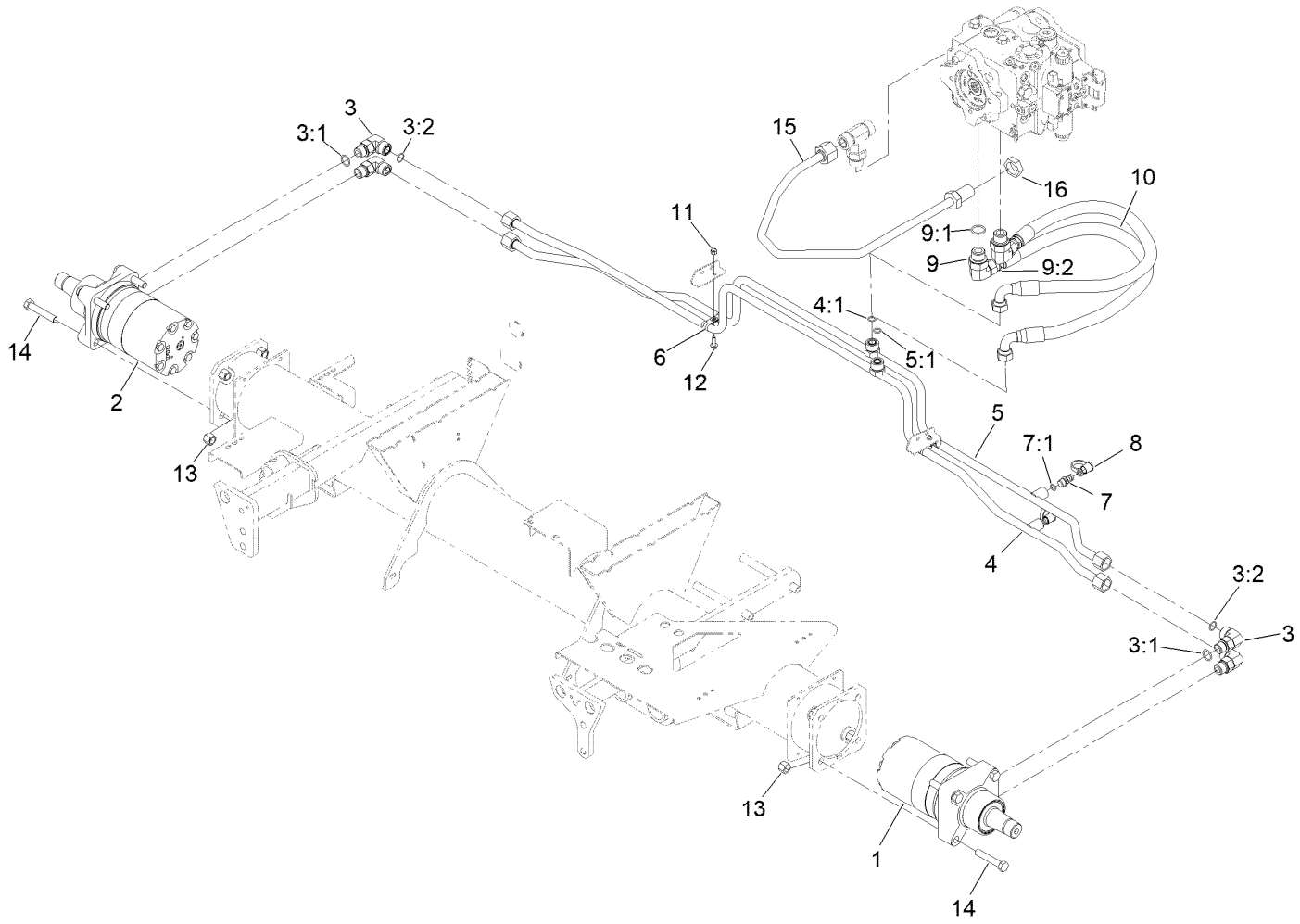

Traction Hydraulic Assembly

Ref.	Part Number	Qty.	Description
1	139-6038	1	Hydraulic Motor ASM
2	139-6039	1	Hydraulic Motor ASM
3	340-17	4	Fitting-Elbow, 90 DEG
3:1	237-65	1	O-Ring
3:2	237-80	1	O-Ring
4	125-1493	1	Tube ASM
4:1	237-65	1	O-Ring
5	125-1494	1	Tube ASM
5:1	237-65	1	O-Ring
6	2412-134	4	Clamp-R
7	59-7410	2	Fitting-Diagnostic
7:1	237-42	1	O-Ring

Ref.	Part Number	Qty.	Description
8	354-79	2	Cap-Dust
9	340-139	2	Fitting-Elbow 90
9:1	237-81	1	O-Ring
9:2	237-65	1	O-Ring
10	127-2300	2	Hose ASM
11	3296-42	2	Nut-Lock, NI
12	3234-4	2	Screw-HHF
13	3296-23	8	Nut-Lock, NI
14	325-11	8	Screw-HH
15	145-2551	1	Hydraulic Tube ASM
16	340-74	1	Nut-Lock, Bulkhead

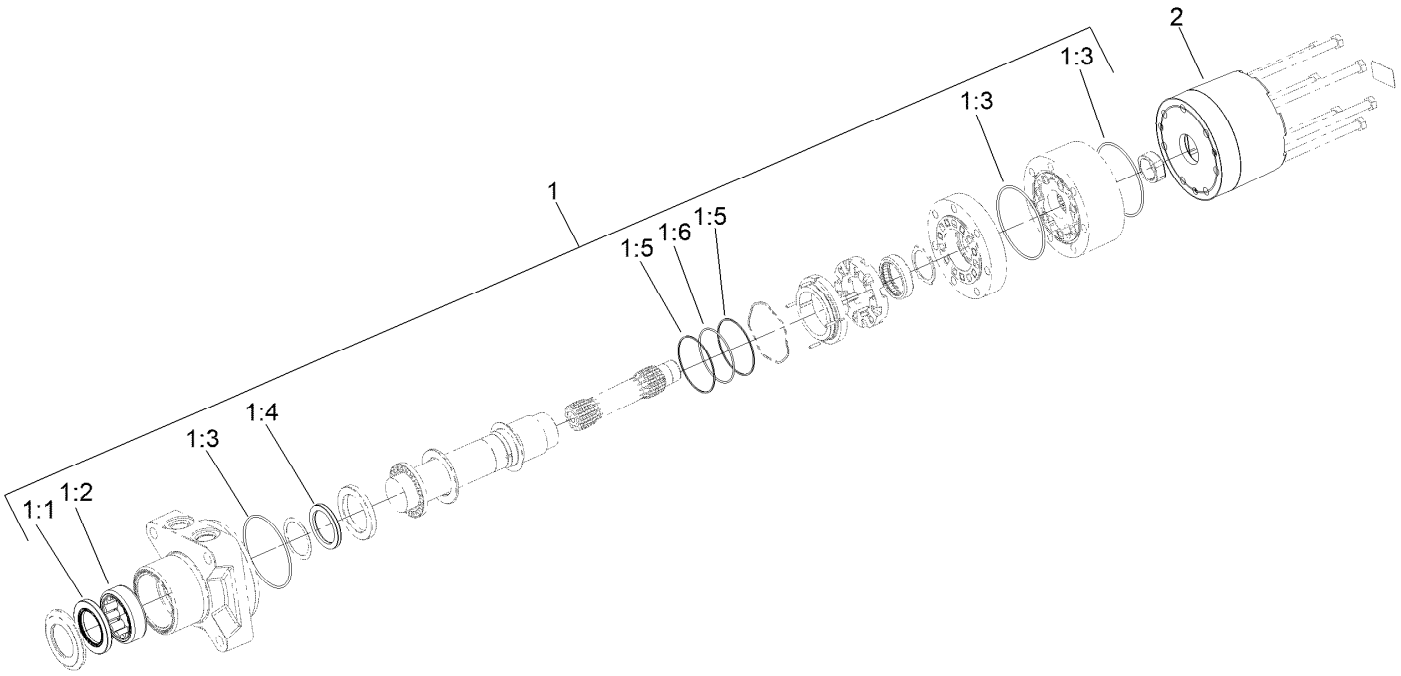

Hydraulic Motor Assembly No. 139-6038

Ref.	*Part Number*	*Qty.*	*Description*
1	161-7208	1	Seal Kit
1:1	161-7209	1	Seal, Grease
1:2	161-7210	1	Shell, Bearing
1:3	161-7211	3	O-Ring
1:4	161-7212	1	Shaft Seal (HP)
1:5	161-7213	2	Back-Up Ring
1:6	161-7214	1	O-Ring
2	145-2597	1	Brake Housing ASM

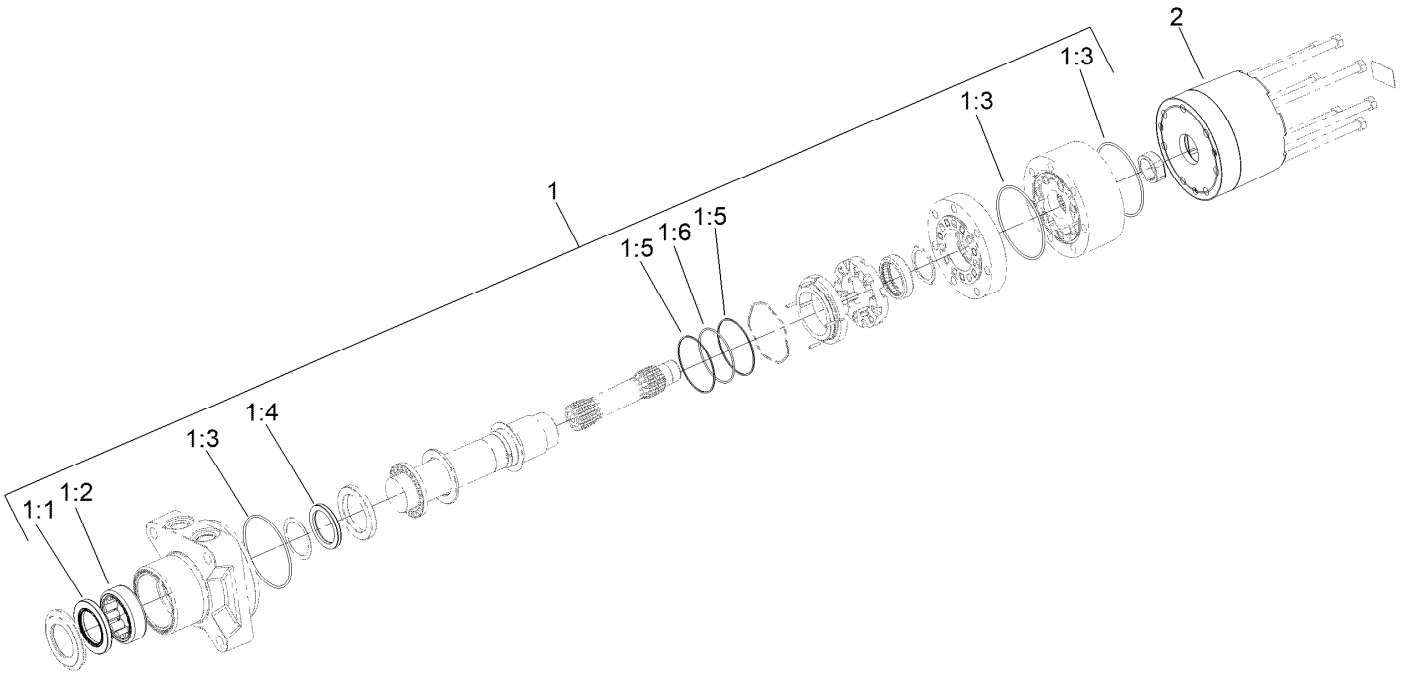

Hydraulic Motor Assembly No. 139-6039

Ref.	*Part Number*	*Qty.*	*Description*
1	161-7208	1	Seal Kit
1:1	161-7209	1	Seal, Grease
1:2	161-7210	1	Shell, Bearing
1:3	161-7211	3	O-Ring
1:4	161-7212	1	Shaft Seal (HP)
1:5	161-7213	2	Back-Up Ring
1:6	161-7214	1	O-Ring
2	145-2597	1	Brake Housing ASM

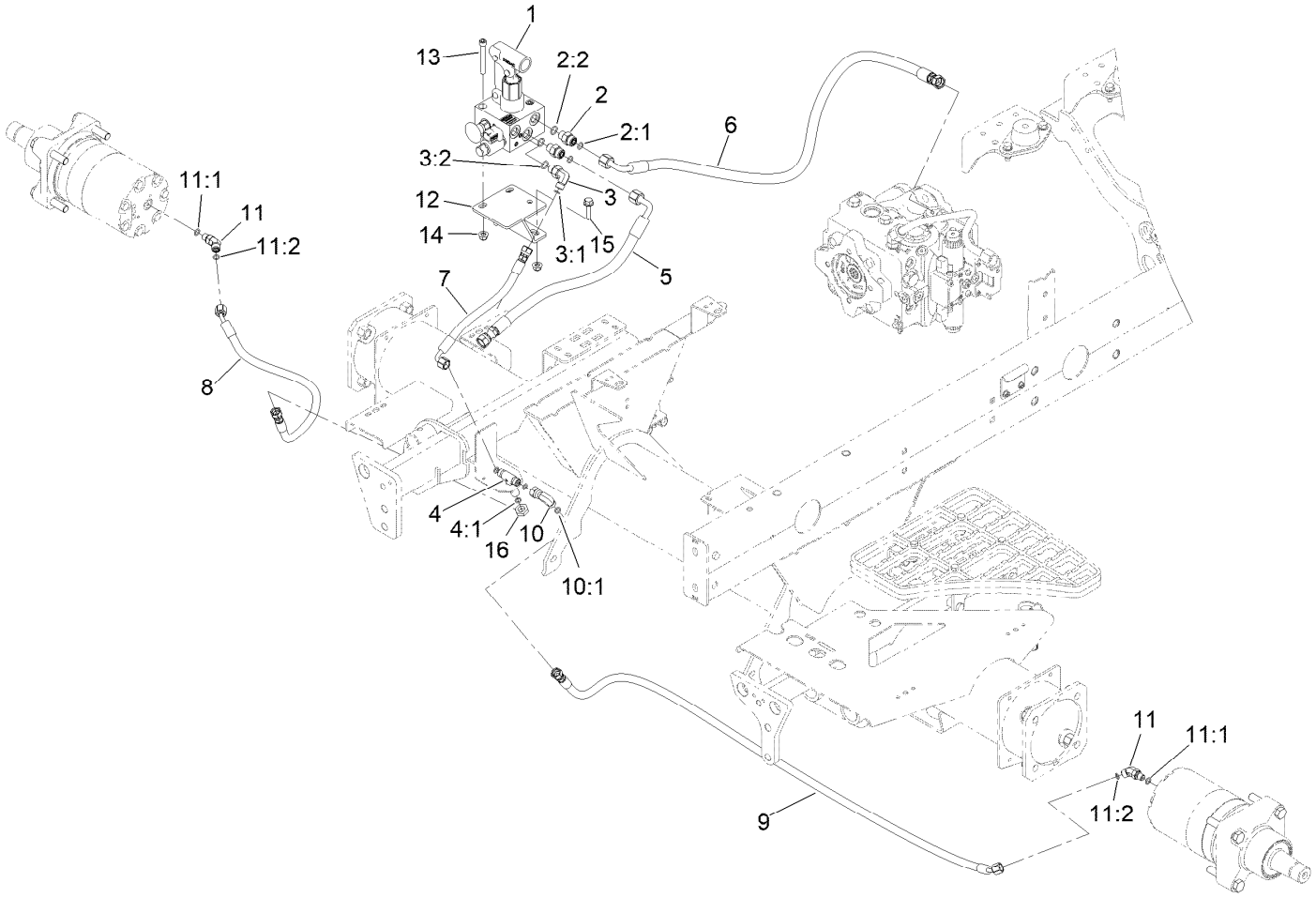

Hydraulic Brake Assembly

Ref.	Part Number	Qty.	Description
1	139-6046	1	Manifold-Brake Release
2	340-2	2	Fitting-Straight
2:1	237-22	1	O-Ring
2:2	237-42	1	O-Ring
3	340-82	1	Fitting-Elbow, 90 DEG
3:1	237-42	1	O-Ring
3:2	237-21	1	O-Ring
4	140-7452	1	Fitting-Tee, Bulkhead
4:1	237-21	3	O-Ring
5	139-1151	1	HYD Hose ASM
6	144-2078	1	Hose ASM-Hydraulic
7	121-4455	1	Hose-HYD
8	145-2599	1	Hose ASM-HYD HP

Ref.	Part Number	Qty.	Description
9	115-2029	1	HYD Hose ASM
10	92-2745	1	Elbow-90
10:1	237-21	1	O-Ring
11	340-103	2	Fitting-HYD, 45 DEG
11:1	237-78	1	O-Ring
11:2	237-21	1	O-Ring
12	145-2459-03	1	Mount - Brake Release [black]
13	3274-40	3	Screw-HSH
14	104-8300	5	Nut-HF, NI
15	3234-29	2	Screw-HHF
16	340-78	1	Nut-Lock

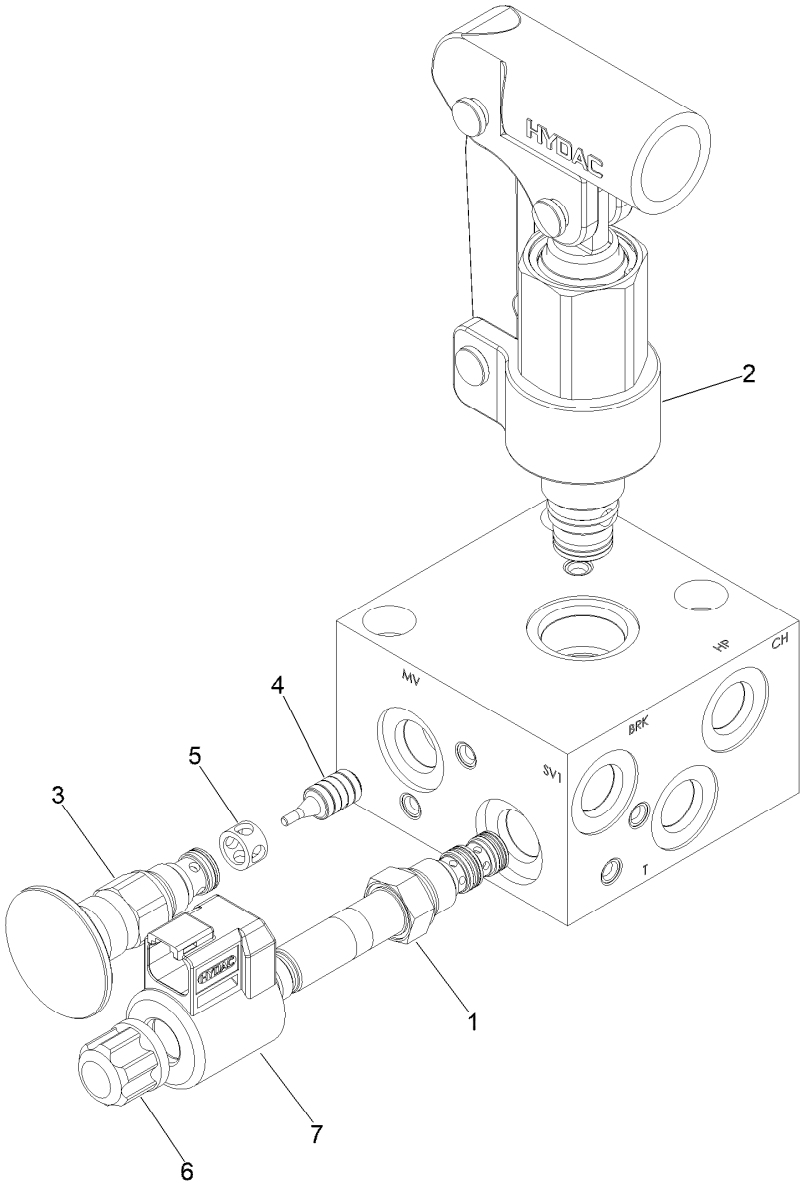

Brake Release Manifold Assembly No. 139-6046

Ref.	*Part Number*	*Qty.*	*Description*
1	145-2563	1	Directional Valve, 3W/2P
2	145-2564	1	Hand Pump
3	145-2565	1	Manual Valve, N.O.
4	145-2566	1	Pilot Piston Assy, Rvs06
5	145-2567	1	Spacer
6	145-2569	1	Coil Nut, Tall (06 Valves)
S1	145-2568	1	*obs* Coil 12Dn01-32-1329

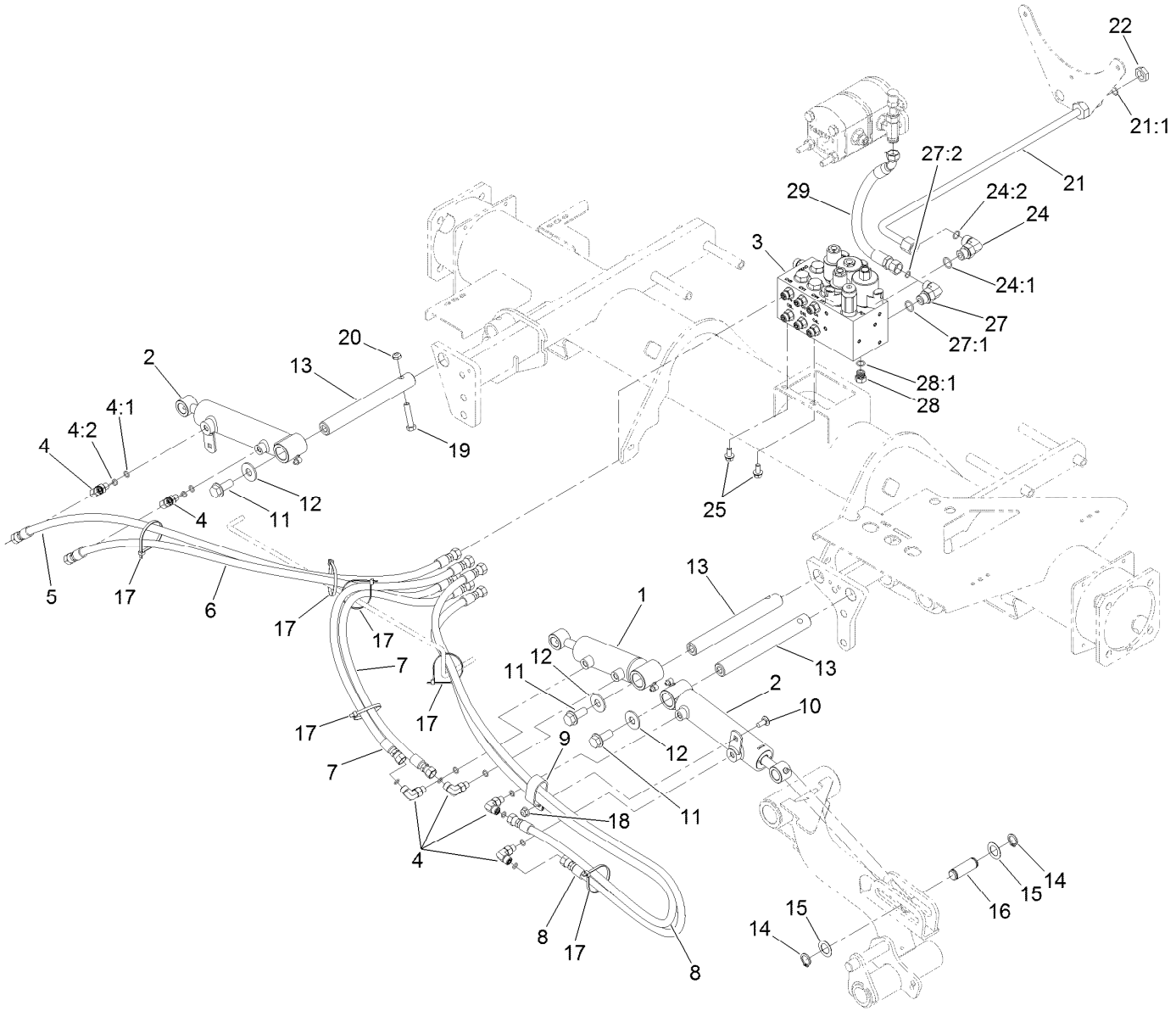

Front Lift Hydraulic Assembly

Ref.	Part Number	Qty.	Description
1	138-6999	1	HYD Cylinder ASM
2	119-6987	2	HYD Cylinder ASM
3	105-7577	1	HYD Lift Block Manifold ASM
4	340-132	6	Fitting-Elbow, 90 DEG
4:1	237-78	1	O-Ring
4:2	237-21	1	O-Ring
5	127-2498	1	Hose ASM
6	127-2499	1	Hose ASM
7	127-2497	2	Hose ASM
8	127-2496	2	Hose ASM
9	2412-137	1	Clamp-R, Double
10	3230-23	1	Bolt-CARR
11	3234-38	3	Screw-HHF
12	3256-6	3	Washer-Flat
13	117-0148	3	Pin-Cylinder
14	32120-93	6	Ring-Retaining
15	3-6498	6	Washer-Thrust

Ref.	Part Number	Qty.	Description
16	104-0046	3	Pin-Slide, Cylinder
17	3290-379	6	Tie-Cable
18	104-8300	1	Nut-HF, NI
19	323-9	3	Screw-HH
20	3296-59	3	Nut-Lock, NI
21	127-2477	1	Tube ASM
21:1	237-30	1	O-Ring
22	340-127	1	Nut-Bulkhead
24	340-98	1	Fitting-Elbow, 90 DEG
24:1	237-79	1	O-Ring
24:2	237-30	1	O-Ring
25	3234-14	2	Screw-HHF
27	340-18	1	Fitting-HYD, 90 DEG
27:1	237-79	1	O-Ring
27:2	237-22	1	O-Ring
28	353-508	1	Plug-HH
28:1	237-42	1	O-Ring
29	127-2535	1	Hose-ASM

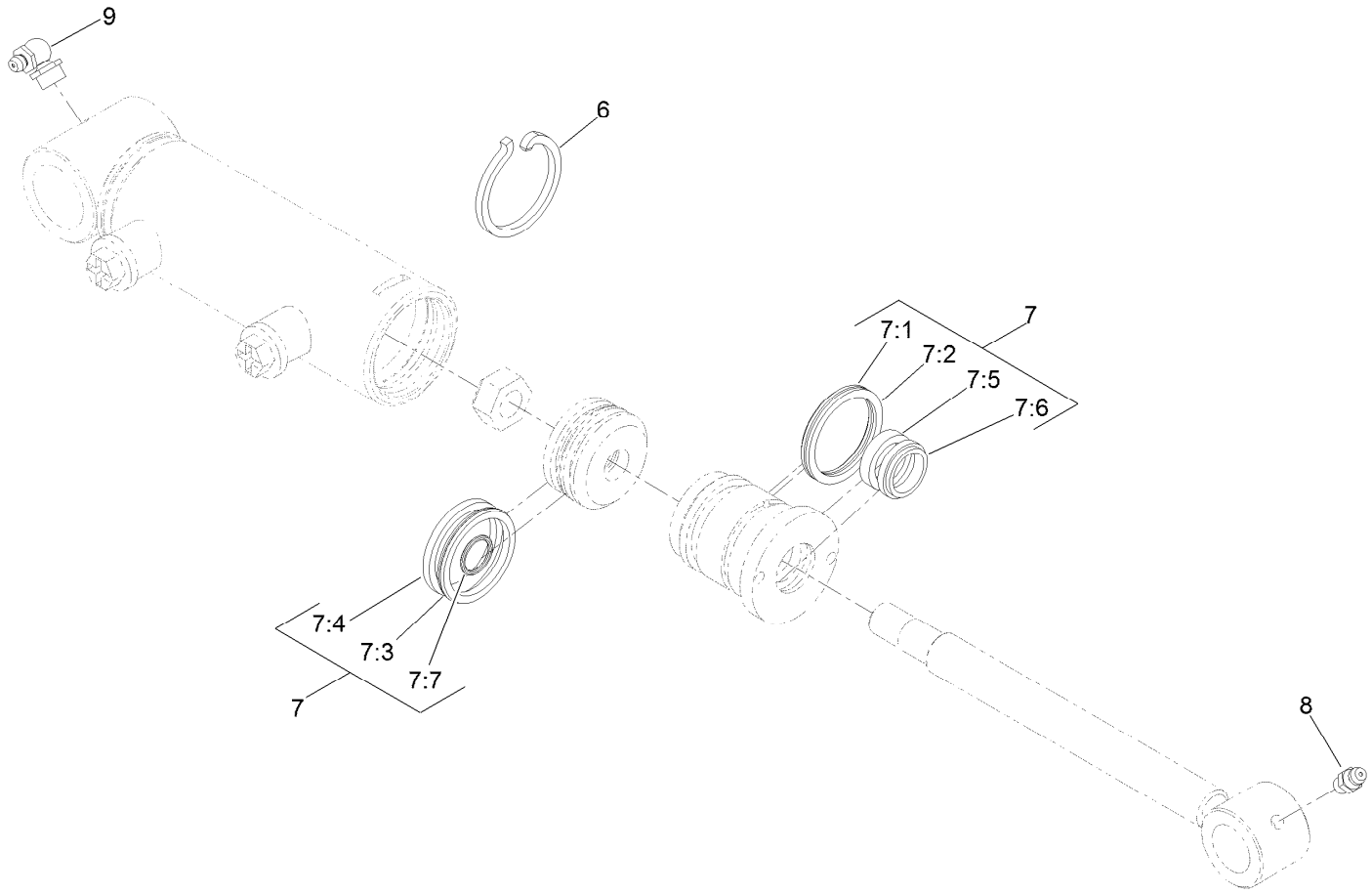

Hydraulic Cylinder Assembly No. 138-6999

Ref.	*Part Number*	*Qty.*	*Description*
6	84-1680	1	Ring-Retaining
7	133-2900	1	Seal Kit
7:1		1	O-Ring ●
7:2		1	Backup ●
7:3		1	Bp Seal ●
7:4		1	Wear Ring-Ht ●
7:5		1	Bt Seal ●
7:6		1	Dust Seal-Dt ●
7:7		1	O-Ring ●
8	302-5	1	Fitting-Grease
9	302-33	1	Fitting-Grease

● Not serviced separately

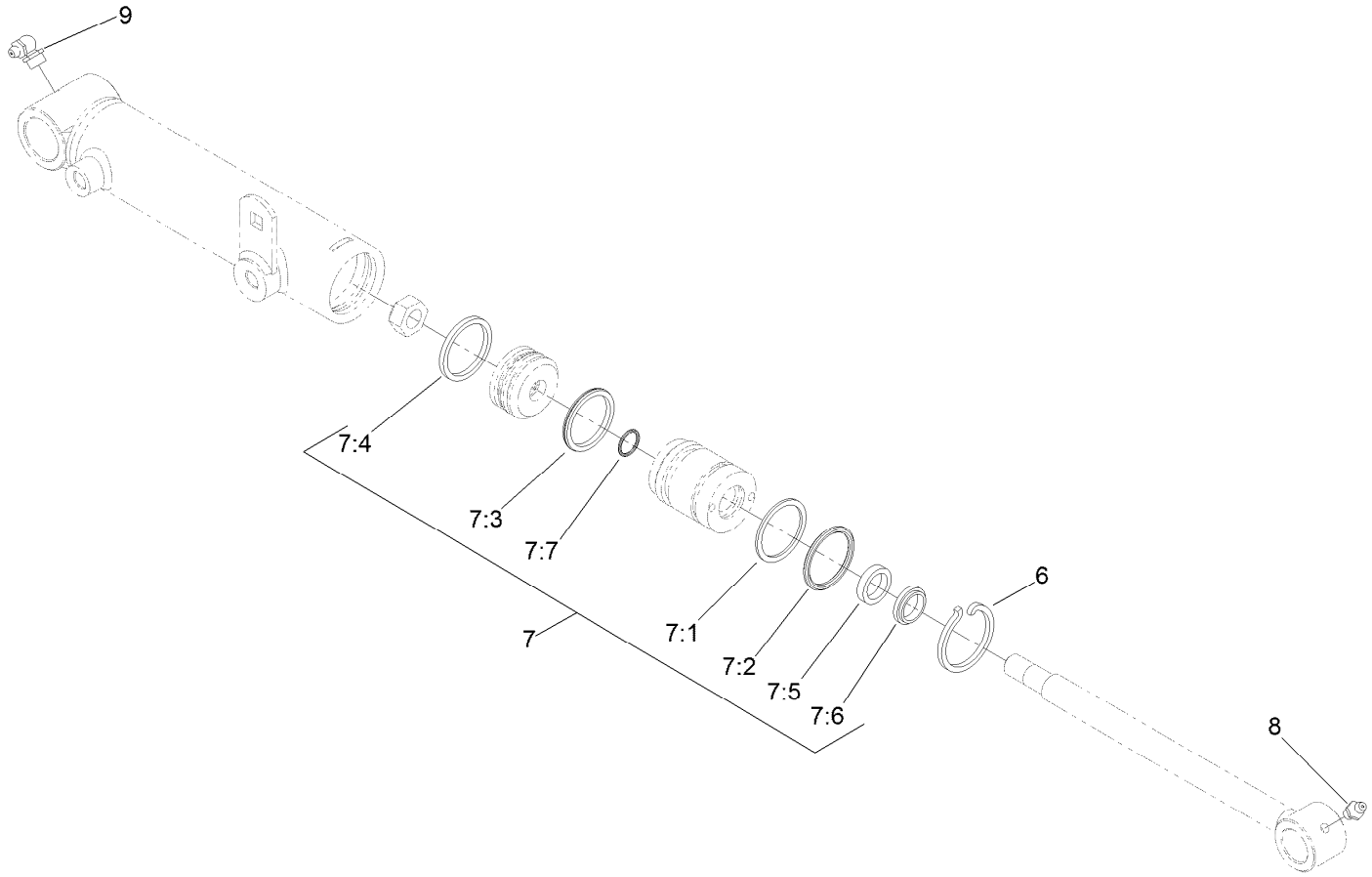

Hydraulic Cylinder Assembly No. 119-6987

Ref.	*Part Number*	*Qty.*	*Description*
6	84-1680	1	Ring-Retaining
7	133-2900	1	Seal Kit
7:1		1	O-Ring ●
7:2		1	Backup ●
7:3		1	Bp Seal ●
7:4		1	Wear Ring-Ht ●
7:5		1	Bt Seal ●
7:6		1	Dust Seal-Dt ●
7:7		1	O-Ring ●
8	302-5	1	Fitting-Grease
9	302-60	1	Fitting-Grease

● Not serviced separately

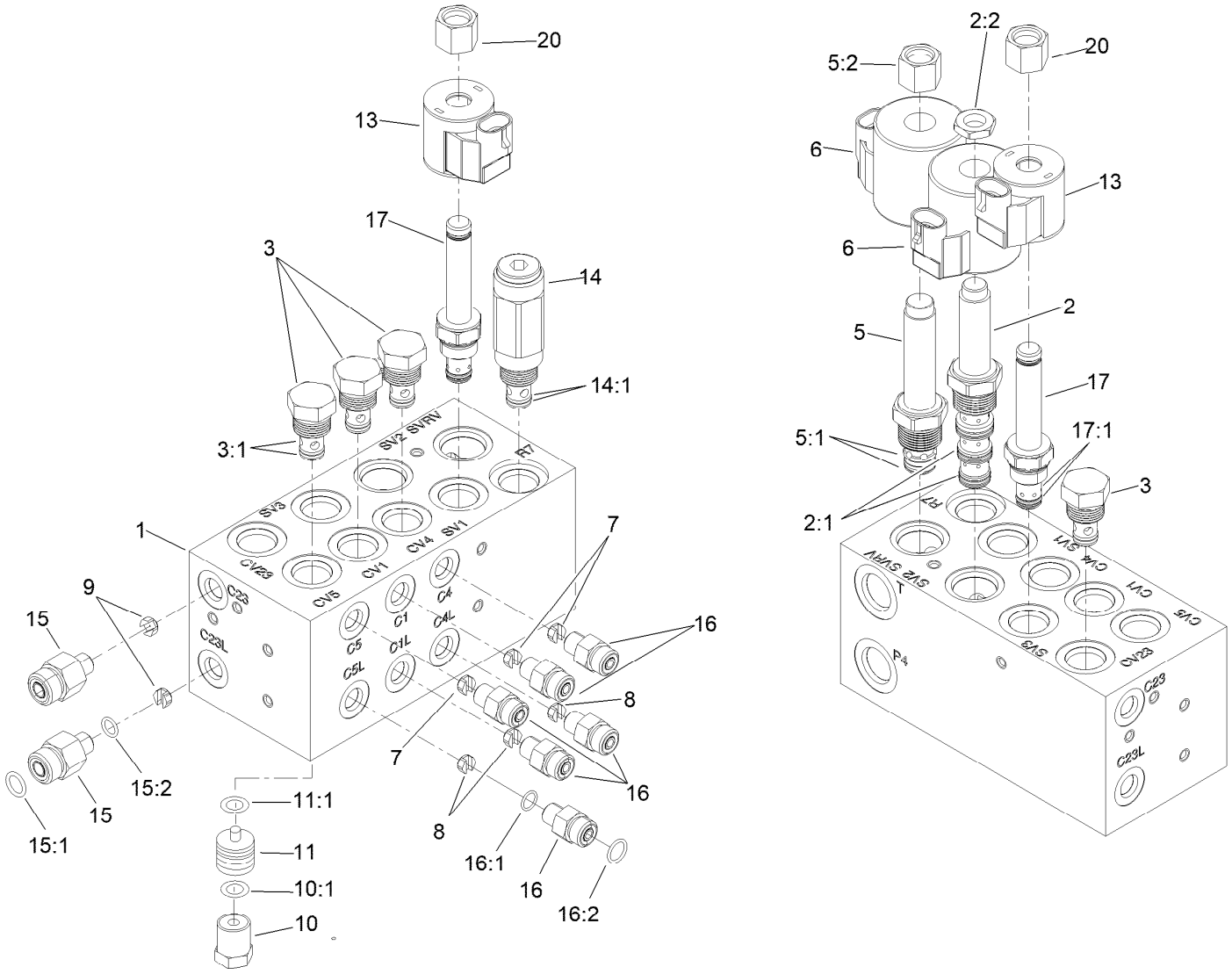

Hydraulic Manifold Block Assembly No. 105-7577

Ref.	Part Number	Qty.	Description
1		1	Block-Manifold ●
2	110-8906	1	Valve-Solenoid
2:1	110-8908	1	Spool Valve Seal Kit
2:2	110-2634	1	Nut-Coil
3	110-9006	4	Valve-Check
3:1	105-9156	1	Seal Kit
5	110-8905	1	Valve-Relief, Solenoid
5:1	110-6316	1	Seal Kit
5:2	130-8180	1	Nut-Coil (9/16-24 Unef-2B)
6	110-6344	2	Coil-12V, DC
7	110-8904	3	Orifice-Control, Flow (0.028)
8	110-8903	3	Orifice-Control, Flow (0.055)
9	110-8902	2	Orifice-Control, Flow (0.046)
10	354-70	4	Plug-Hex, Hollow
10:1	237-80	1	O-Ring

Ref.	Part Number	Qty.	Description
11	110-8901	4	Piston-Pilot
11:1	110-8900	1	O-Ring
13	110-0497	2	Coil-Solenoid
14	110-8899	1	Valve-Relief
14:1	105-9156	1	Seal Kit
15	340-88	2	Fitting-Straight
15:1	237-22	1	O-Ring
15:2	237-78	1	O-Ring
16	340-92	6	Fitting-Straight
16:1	237-78	1	O-Ring
16:2	237-21	1	O-Ring
17	147-3090	2	Valve-Solenoid
17:1	107-7527	1	Seal Kit
20	107-7812	2	Nut-Solenoid

● Not serviced separately

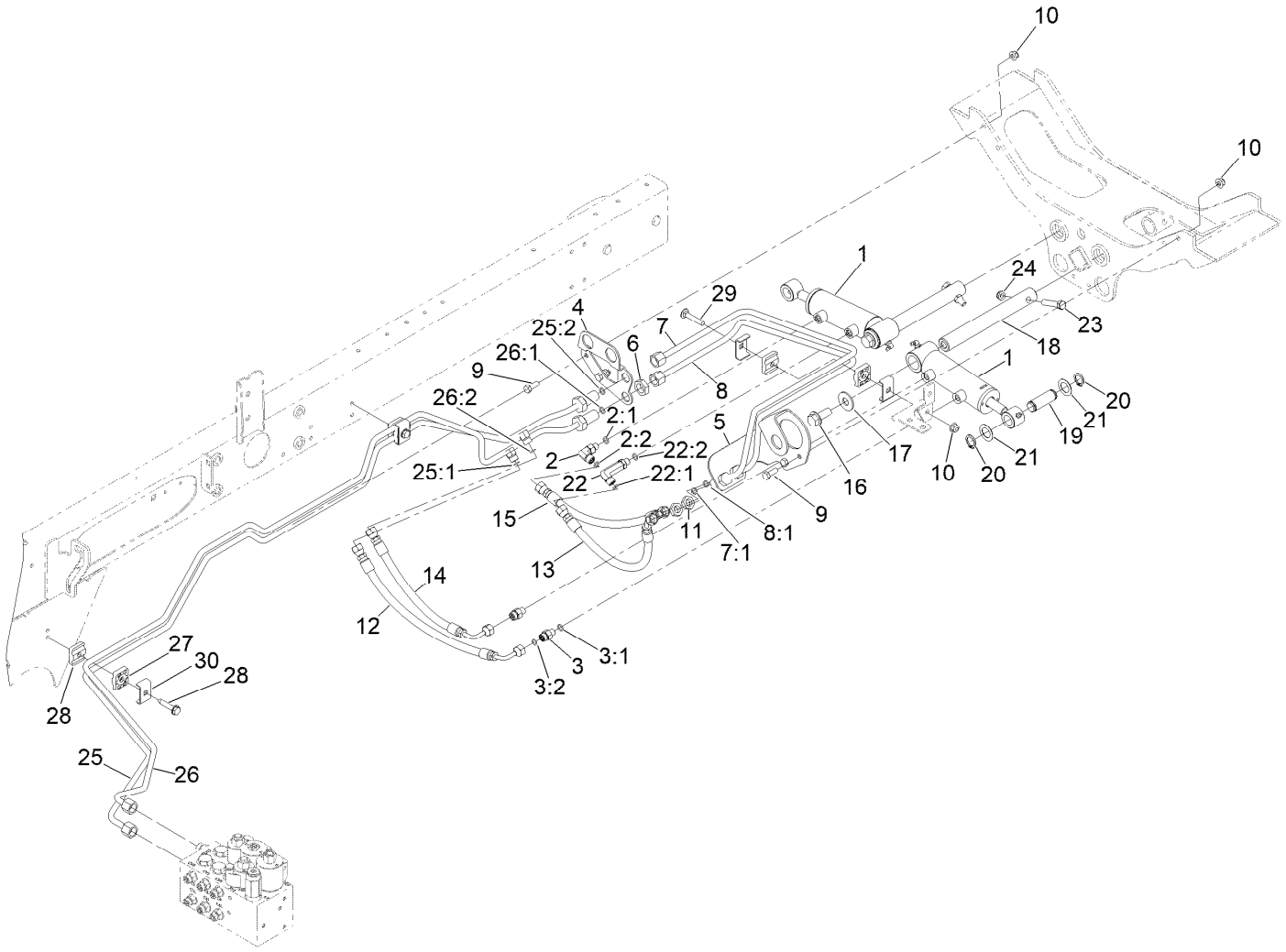

Rear Lift Hydraulic Assembly

Ref.	Part Number	Qty.	Description
1	138-6999	2	HYD Cylinder ASM
2	340-132	1	Fitting-Elbow, 90 DEG
2:1	237-78	1	O-Ring
2:2	237-21	1	O-Ring
3	340-92	2	Fitting-Straight
3:1	237-78	1	O-Ring
3:2	237-21	1	O-Ring
4	127-2568-0P	1	Bracket-Bulkhead, RH
5	127-2567-0P	1	Bracket-Bulkhead, LH
6	340-70	2	Nut-Lock
7	133-2987	1	Tube-ASM
7:1	237-21	1	O-Ring
8	133-2986	1	Tube-ASM
8:1	237-21	1	O-Ring
9	322-4	4	Screw-HH
10	104-8300	5	Nut-HF, NI
11	340-78	2	Nut-Lock
12	110-0930	1	Hose-HYD
13	110-8966	1	Hose-HYD
14	110-0929	1	Hose-HYD
15	110-0931	1	Hose-HYD

Ref.	Part Number	Qty.	Description
16	3234-38	2	Screw-HHF
17	3256-6	2	Washer-Flat
18	117-0148	2	Pin-Cylinder
19	104-0046	2	Pin-Slide, Cylinder
20	32120-93	4	Ring-Retaining
21	3-6498	4	Washer-Thrust
22	100-7695	1	Fitting-Elbow 90
22:1	237-78	1	O-Ring
22:2	237-21	1	O-Ring
23	323-9	2	Screw-HH
24	3296-59	2	Nut-Lock, NI
25	145-2555	1	Hydraulic Tube ASM
25:1	237-21	1	O-Ring
25:2	237-22	1	O-Ring
26	145-2554	1	Hydraulic Tube ASM
26:1	237-21	1	O-Ring
26:2	237-22	1	O-Ring
27	32144-57	2	Screw
28	56-7973	6	Clamp-Tube
29	3230-5	1	Bolt-CARR
30	119-1418	4	Plate-Clamp, Short

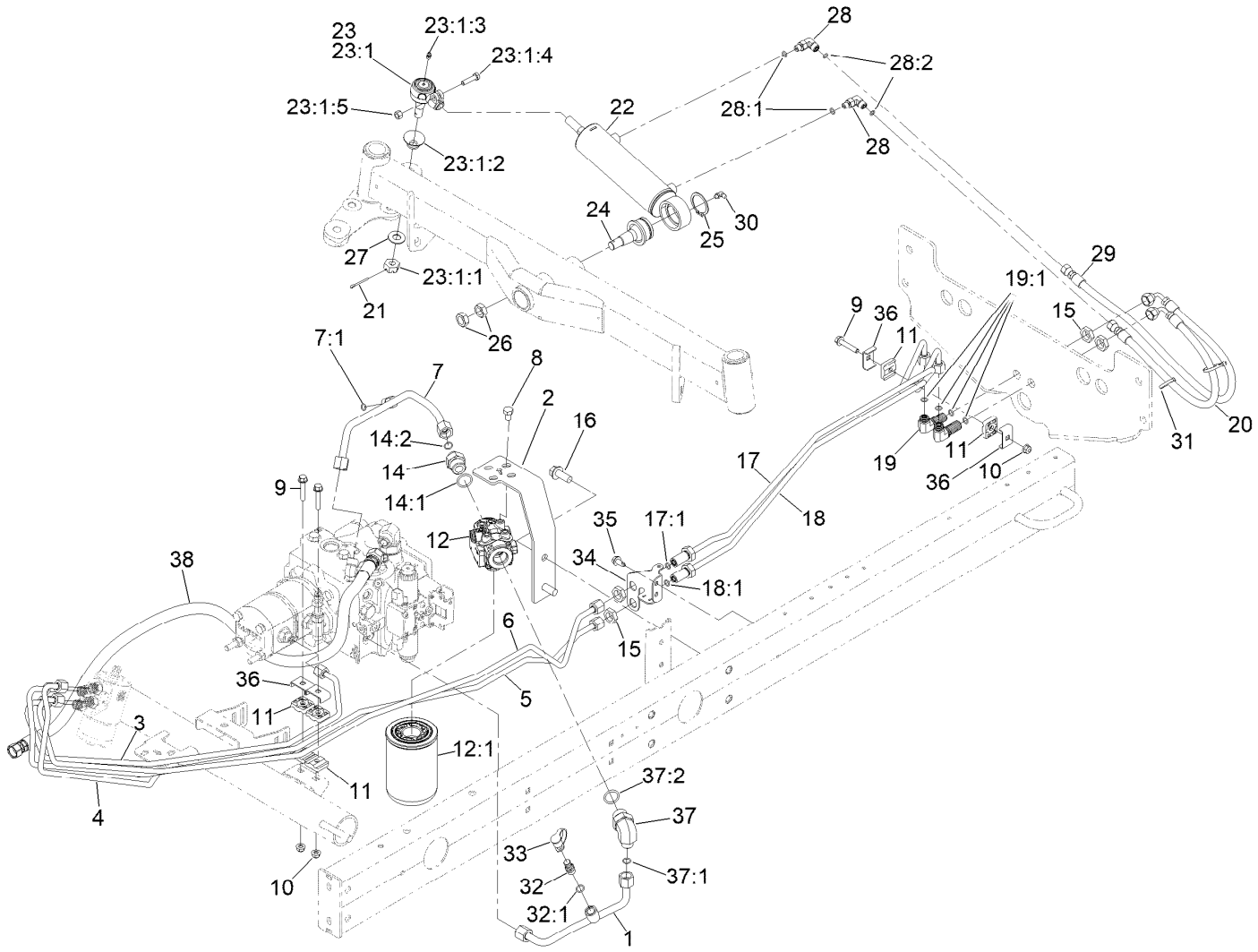

Steering Hydraulic Assembly

Ref.	Part Number	Qty.	Description
1	144-2057	1	Tube ASM-Hydraulic
2	144-2086-0P	1	Bracket-Mount, Filter
3	144-2070	1	Tube ASM-Hydraulic
4	144-2079	1	Hydraulic Tube ASM
5	144-2072	1	Tube ASM-Hydraulic
6	144-2073	1	Tube ASM-Hydraulic
7	139-6047	1	Tube ASM-Hydraulic
7:1	237-22	1	O-Ring
8	33115-016	4	Screw-HH
9	94-5780	3	Screw-HWH
10	104-8300	3	Nut-HF, NI
11	56-7973	6	Clamp-Tube
12	93-2242	1	Oil Filter ASM
12:1	75-1310	1	Filter-HYD
14	100-4240	1	Fitting-STR
14:1	237-30	1	O-Ring
14:2	237-81	1	O-Ring
15	340-70	4	Nut-Lock

Ref.	Part Number	Qty.	Description
16	3234-38	2	Screw-HHF
17	136-3729	1	Hydraulic Tube ASM
17:1	237-22	1	O-Ring
18	127-2338	1	Tube ASM
18:1	237-22	1	O-Ring
19	340-154	2	Union-Bulkhead
19:1	237-22	2	O-Ring
20	110-0928	1	Hose-HYD
21	3272-12	1	Pin-Cotter
22	110-9035	1	HYD Cylinder ASM
23	106-6895-03	1	Ball Joint ASM
23:1		1	Joint-Ball ●
23:1:1	32136-13	1	Nut-SHH
23:1:2	106-6896	1	Seal
23:1:3	302-5	1	Fitting-Grease
23:1:4	3210-7	1	Screw-HH
23:1:5	32152-5	1	Nut-Hex
24	106-6774	1	Joint-Ball

● Not serviced separately

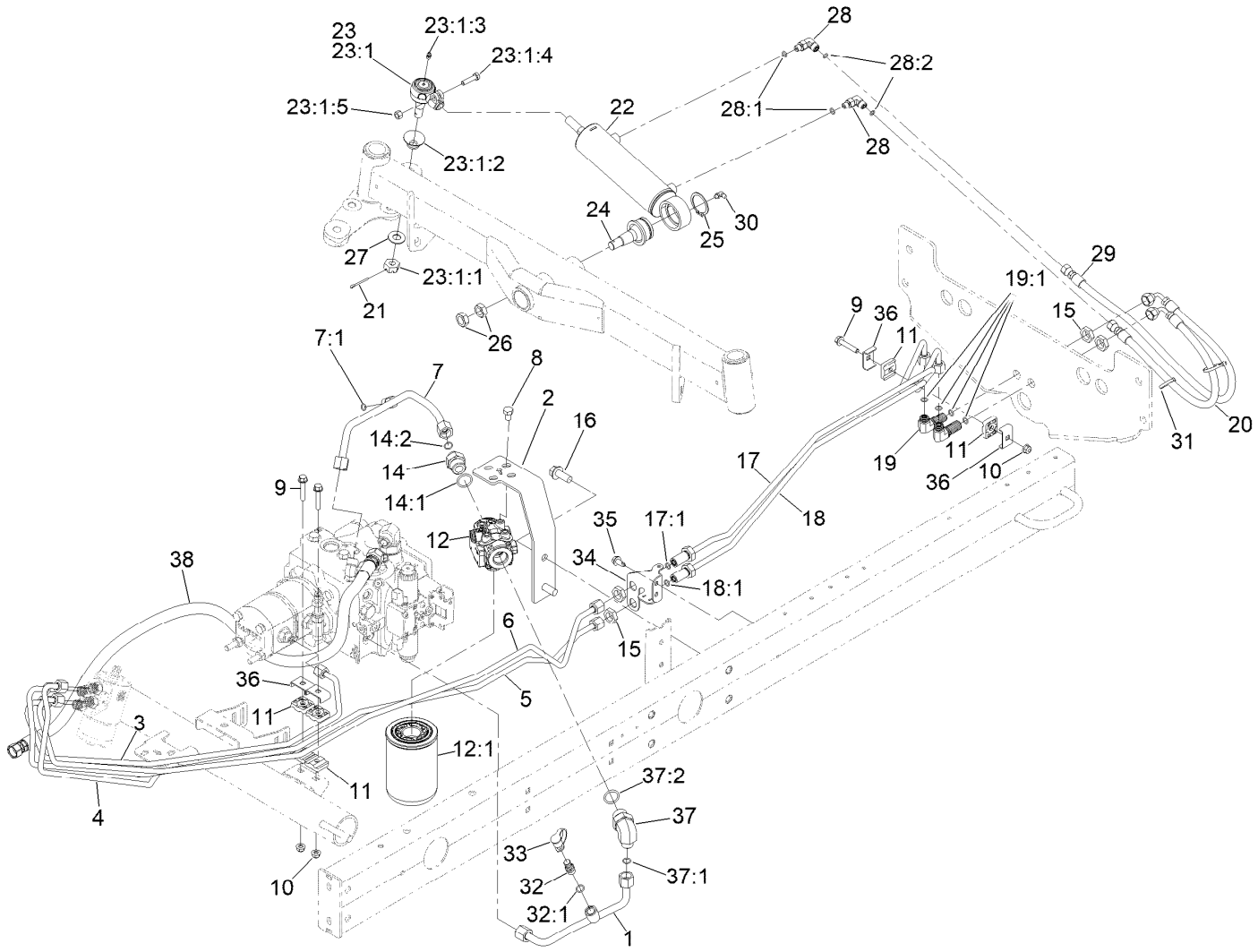

Steering Hydraulic Assembly (continued)

Ref.	*Part Number*	*Qty.*	*Description*
25	32151-104	1	Ring-Retaining, External
26	3220-6	2	Nut-Jam
27	69-8980	1	Washer
28	340-132	2	Fitting-Elbow, 90 DEG
28:1	237-78	1	O-Ring
28:2	237-21	1	O-Ring
29	110-0973	1	Hose-HYD
30	302-40	1	Fitting-Grease, 90 DEG
31	3290-378	2	Tie-Cable
32	59-7410	1	Fitting-Diagnostic

Ref.	*Part Number*	*Qty.*	*Description*
32:1	237-42	1	O-Ring
33	353-947	1	Cap-Dust, Black
34	127-2341-0P	1	Brkt-Bulkhead, Steer
35	32104-32	2	Screw-HWH
36	119-1418	4	Plate-Clamp, Short
37	340-131	1	Fitting-HYD, 90 DEG
37:1	237-30	1	O-Ring
37:2	237-81	1	O-Ring
38	144-2077	1	Hose ASM-Hydraulic

● Not serviced separately

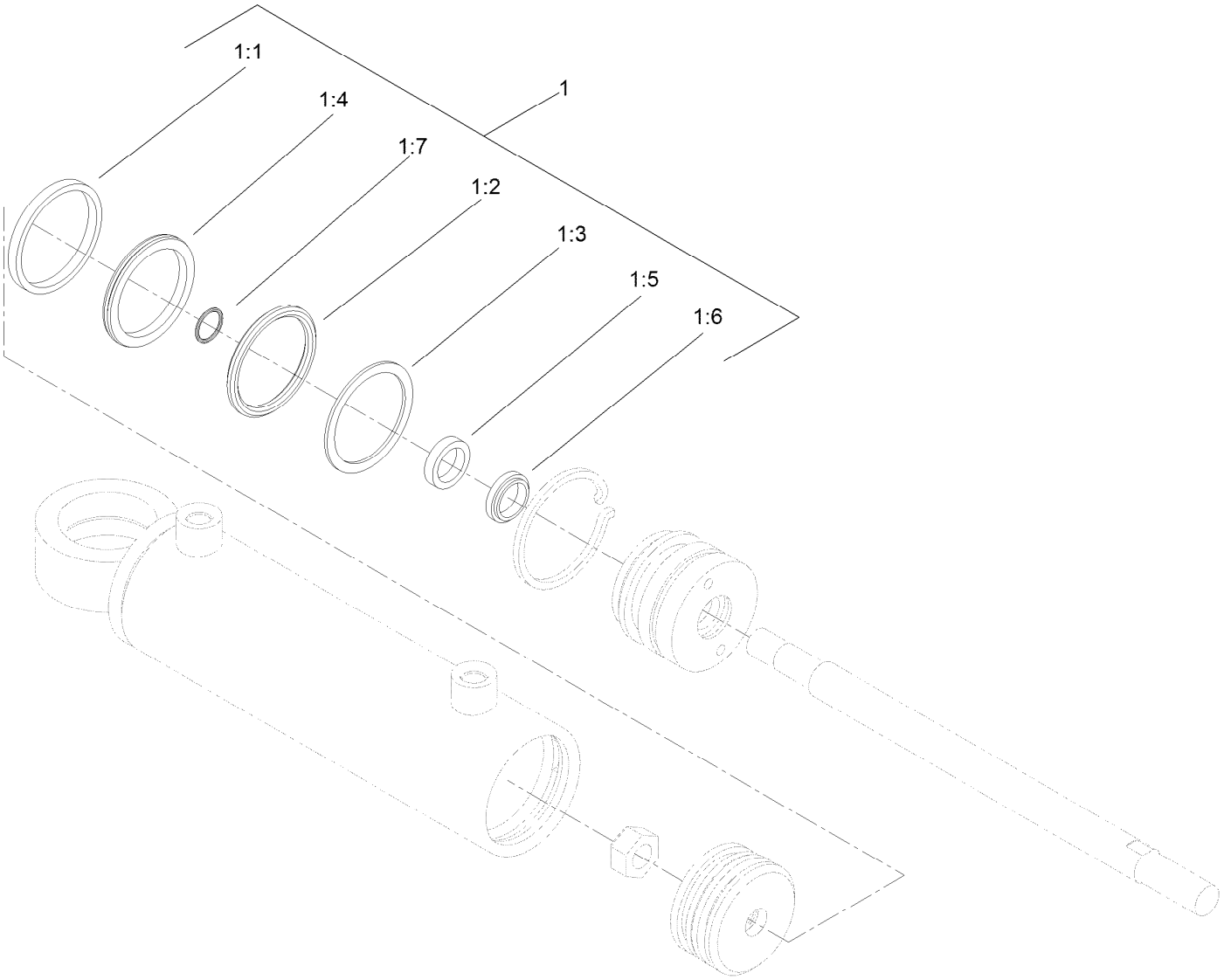

Hydraulic Cylinder Assembly No. 110-9035

Ref.	*Part Number*	*Qty.*	*Description*
1	114-8875	1	Seal Kit
1:1		1	O-Ring ●
1:2		1	Backup ●
1:3		1	Bp Seal ●
1:4		1	Wear Ring ●
1:5		1	Bt Seal ●
1:6		1	Dust Seal ●
1:7		1	O-Ring ●

● Not serviced separately

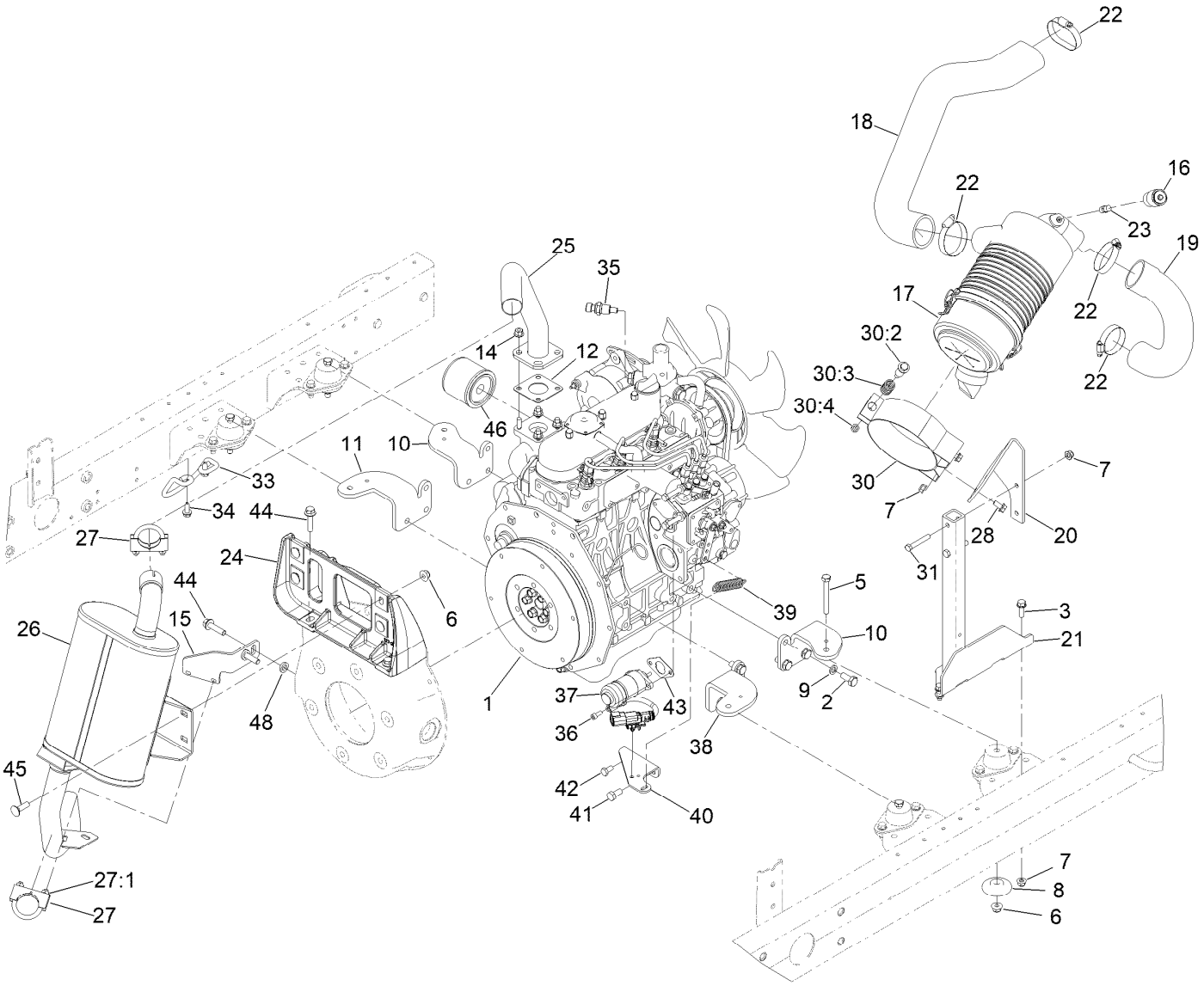

Engine, Air Cleaner and Drive Shaft Assembly

Ref.	Part Number	Qty.	Description
1	138-6909	1	Engine-Kubota, D1105
2	43-0090	12	Screw-HH
3	3234-29	3	Screw-HHF
5	323-14	4	Screw-HH
6	104-8301	8	Nut-HF, NI
7	104-8300	7	Nut-HF, NI
8	138-6462	4	Support-Isolator
9	48-9590	12	Washer-Lock
10	115-8066-0P	2	Mount-Engine
11	115-8063-0P	1	Mount-Engine RH
12	99-8343	1	Gasket-Muffler
14	104-2612	4	Nut-HF
15	147-6082-0P	1	Bracket-Tailpipe
16	93-9164	1	Indicator-Mini
17	106-5277	1	Air Cleaner ASM
18	127-2696	1	Hose-Formed
19	117-5164	1	Hose-Formed
20	127-2695-0P	1	Bracket-Air Cleaner
21	121-5610-0P	1	Stand W.A. Air Cleaner (Welded)
22	2412-130	4	Clamp-Hose

Ref.	Part Number	Qty.	Description
23	94-1416	1	Adapter-Indicator
24	127-2550	1	Bracket-Muffler
25	127-2698	1	Header-Exhaust
26	127-2503	1	Muffler-Exhaust
27	2112-9	2	Clamp
27:1	32128-20	2	Nut-HF
28	3234-14	2	Screw-HHF
30	100-4825	1	Band-Mounting, Air Cleaner
30:2	94-3653	1	Bolt
30:3	94-3654	1	Spring
30:4	33024-00	1	Nut-Lock, NI
31	322-10	2	Screw-HH
33	127-2612	1	Guard-Pipe, Tail
34	32104-32	2	Screw-HWH
35	119-4478	1	Sender-Temperature
36	105-2409	2	Screw-HSH
37	125-1562	1	Actuator-Fuel
38	115-8068-0P	1	Mount-Engine, LH
39	107-1045	1	Spring-Extension
40	125-1472-0P	1	Bracket-Spring, Throttle
41	63-7790	1	Screw-Cap

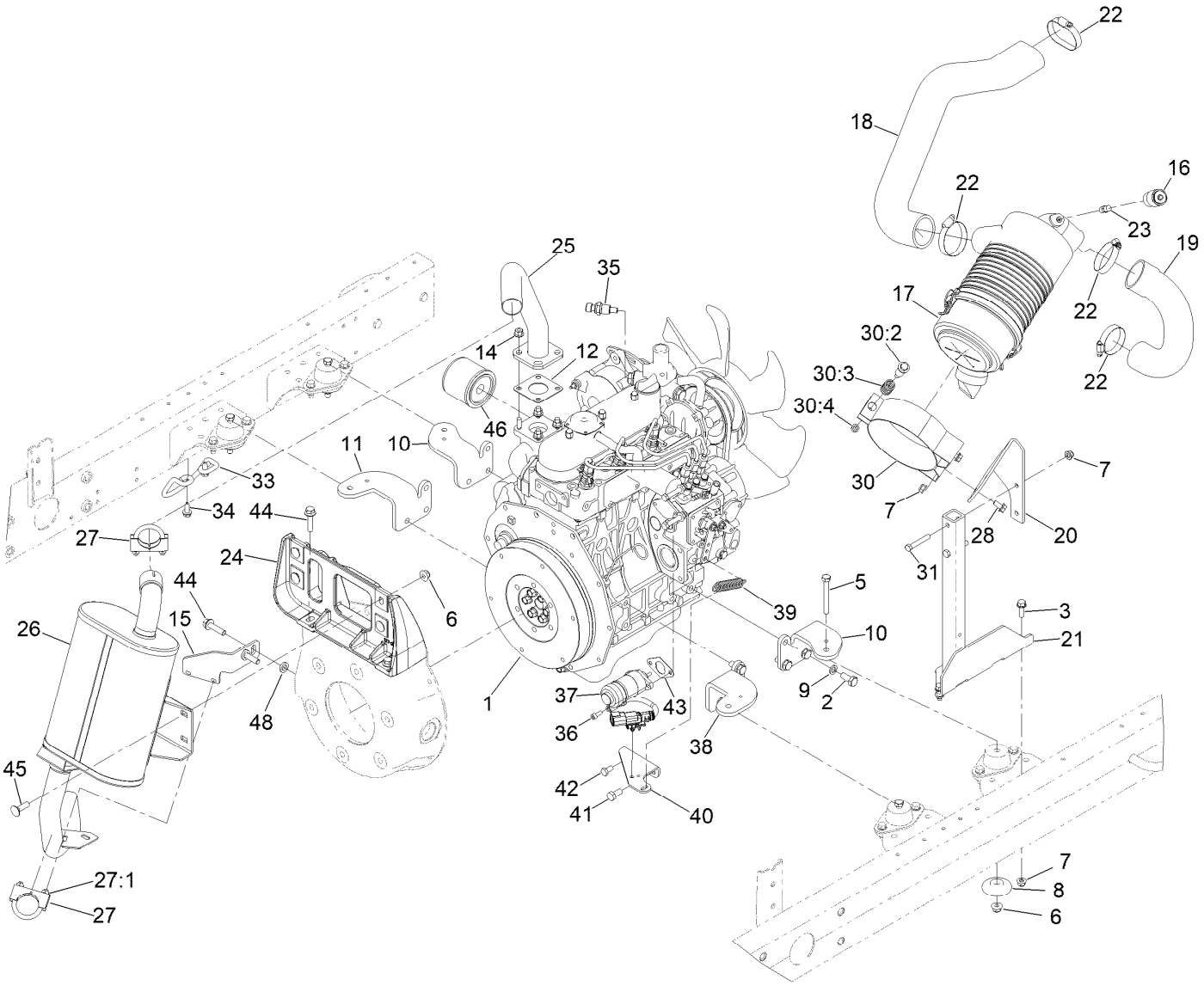

Engine, Air Cleaner and Drive Shaft Assembly (continued)

Ref.	Part Number	Qty.	Description
42	33114-016	1	Screw-HH
43	127-2507	1	Gasket-Actuator, Fuel (F/W Actuator)
44	114-4681	6	Screw-HHF
45	3231-25	4	Bolt-CARR
46	108-3841	1	Filter-Oil
48	3-3287	2	Spacer

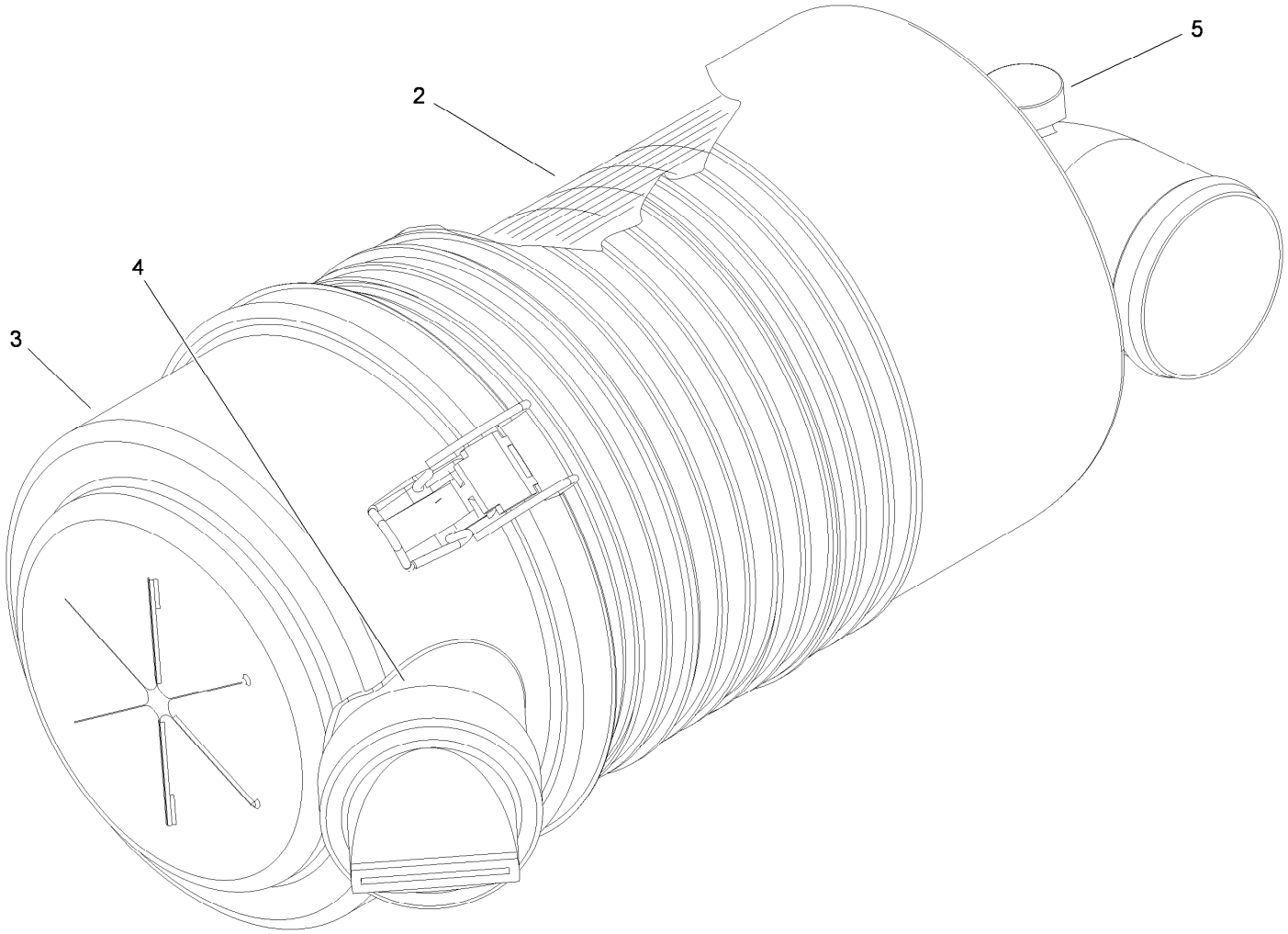

Air Cleaner Assembly No. 106-5277

Ref.	*Part Number*	*Qty.*	*Description*
2	108-3810	1	Filter-Air
3	98-9771	1	Cover ASM
4	87-9400	1	Valve-Vacuator
5	285-17	1	Plug-Pipe

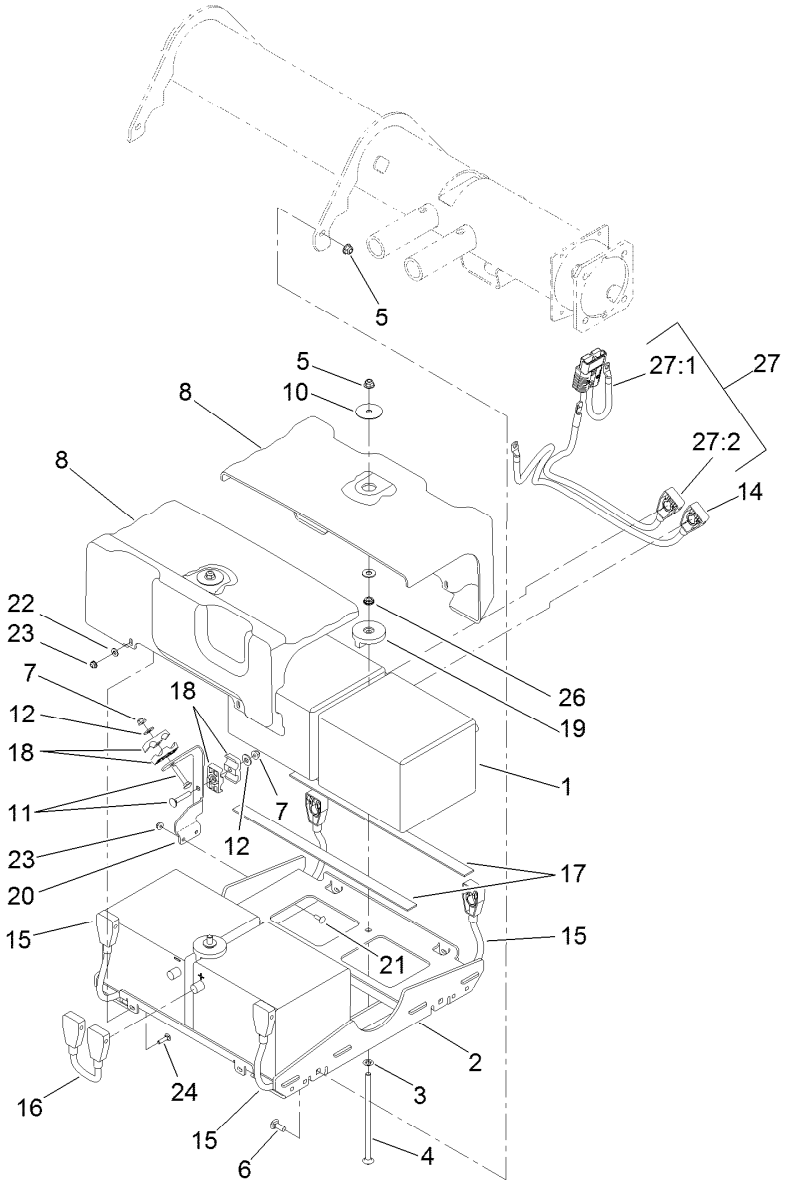

48 Volt Battery Assembly

Ref.	Part Number	Qty.	Description
1	136-3726	4	Battery-12V Agm 35-650
2	136-3708-01	1	Tray ASM [red]
3	107-3154	2	Nut-Push
4	120-4743	2	Screw-CARR
5	104-8301	6	Nut-HF, NI
6	3231-2	4	Bolt-CARR
7	104-8300	2	Nut-HF, NI
8	136-3709	2	Cover-Battery
10	120-2229	2	Washer
11	3230-5	2	Bolt-CARR
12	3256-3	2	Washer-Flat
14	122-0268	1	Negative Battery Cable ASM
15	122-0133	2	Positive Battery Cable ASM
16	122-0134	1	Jumper-Cable-Battery (Positive)
17	127-2306	4	Strip-Foam
18	56-7971	4	Clamp-Tube
19	127-2393	2	Hold Down-Battery
20	127-2517-01	1	Bracket-Cable
21	3229-1	2	Screw-CARR
22	3256-78	4	Washer-Flat
23	104-7201	6	Nut-HF, NI
24	3229-2	4	Screw-CARR
26	3217-7	2	Nut-Hex
27	122-0449	1	Cable-Battery
27:1	122-0267	1	Positive Battery Cable ASM
27:2	122-0319	1	Positive Battery Cable ASM

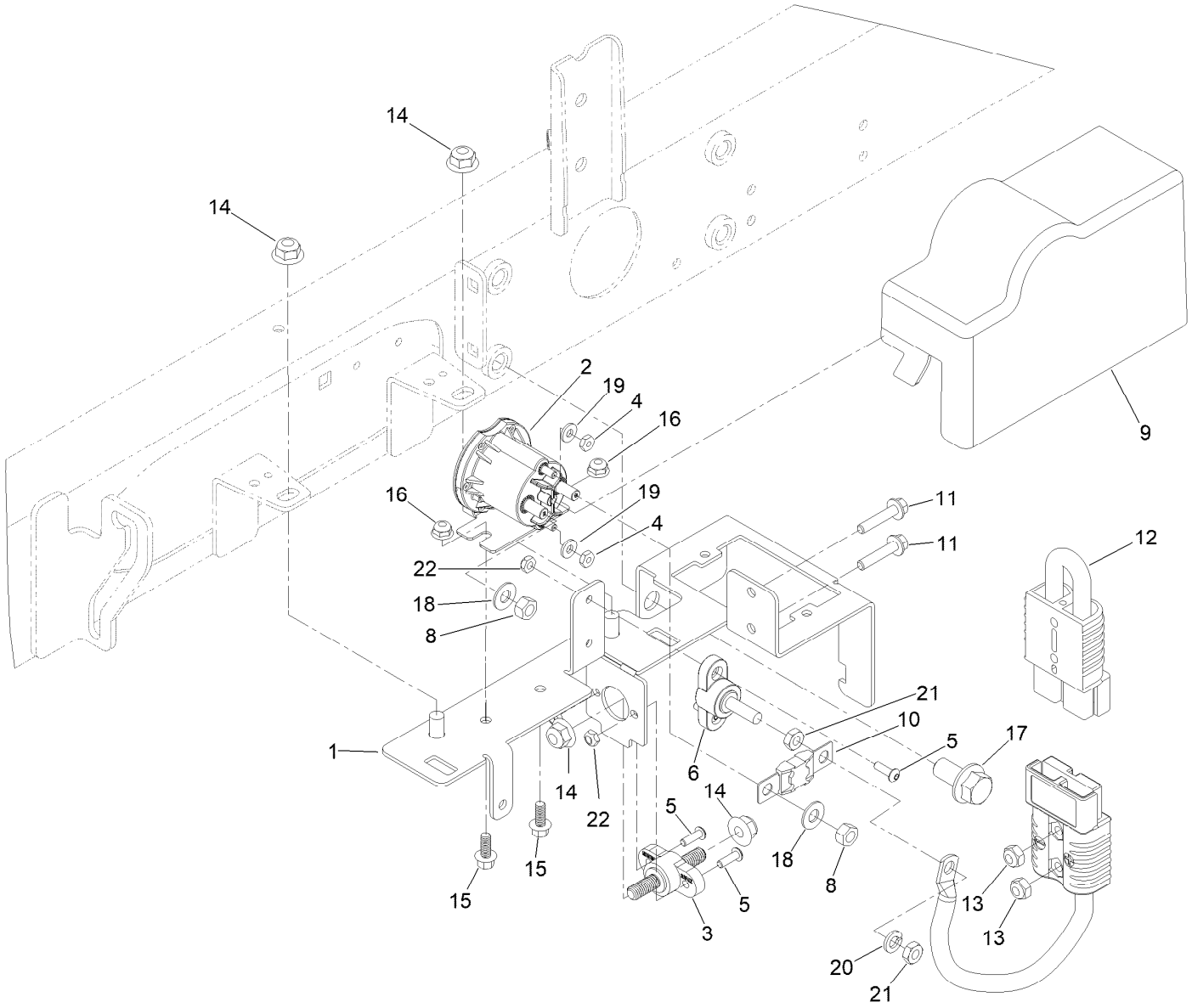

48 Volt Contactor Assembly

Ref.	Part Number	Qty.	Description
1	145-2452	1	Bracket ASM, 48V
2	122-2640	1	Contactor-DC, 48V
3	122-2411	1	Block-Junction, Black
4	3219-14	2	Nut-Hex
5	3274-39	4	Screw-HSBH
6	122-3514	1	Block-Junction, 5/16-18
8	3219-2	2	Nut-Hex
9	145-2465	1	Cover-Electrical
10	127-2305	1	Fuse-250 Amp
11	127-8639	2	Screw-HHF
12	122-0136	1	Cable-Battery, Positive Jumper ASM

Ref.	Part Number	Qty.	Description
13	3296-16	2	Nut-Lock, NI
14	104-8301	4	Nut-HF, NI
15	99-6810	2	Screw-HHF
16	104-7201	4	Nut-HF, NI
17	3234-6	1	Screw-HHF
18	107-0279	2	Washer
19	3256-14	2	Washer-Flat
20	3253-4	1	Washer-Lock
21	3218-2	2	Nut-Hex Jam
22	3296-12	4	Nut-Lock, NI

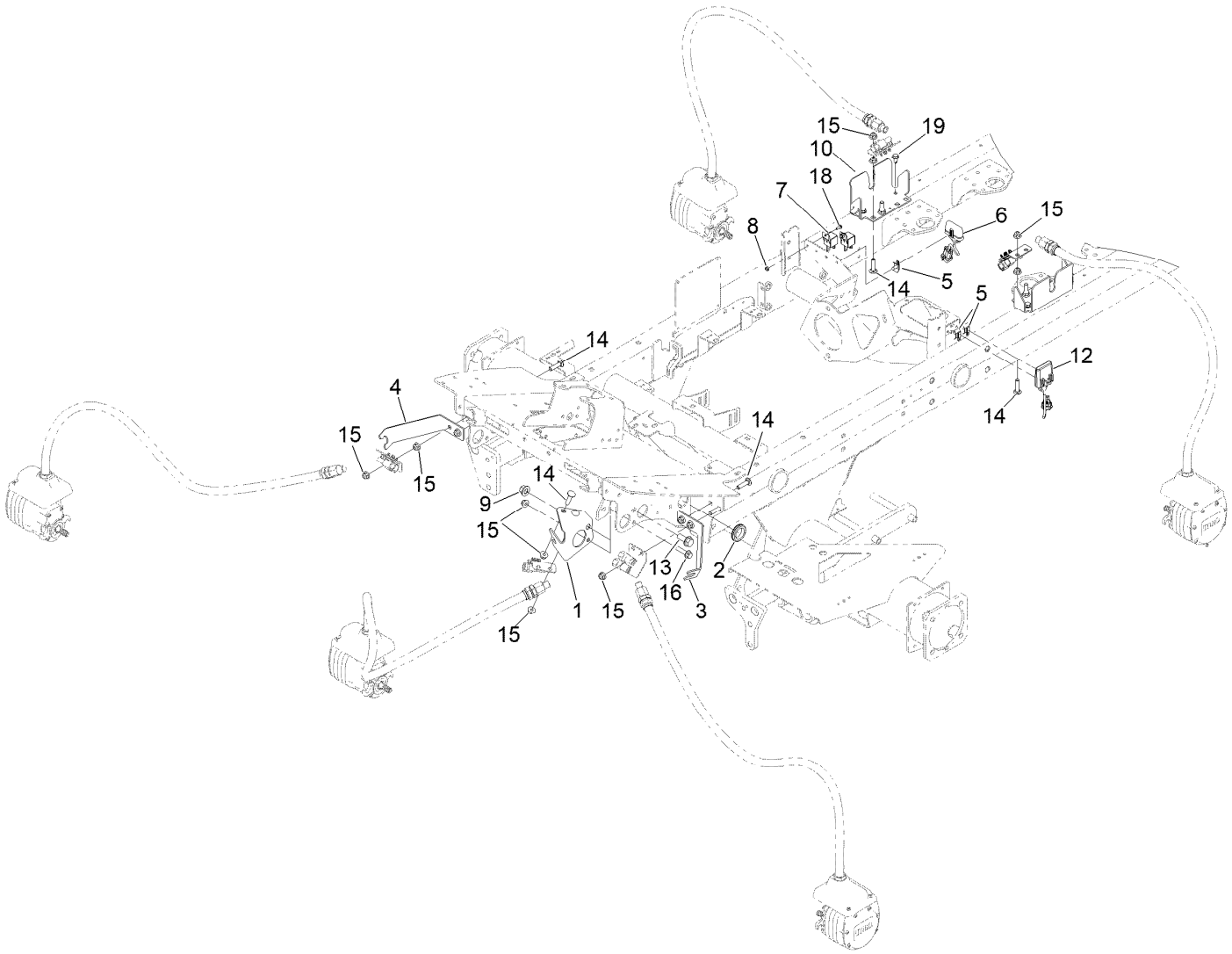

Reel Motor Plumbing Assembly

Ref.	Part Number	Qty.	Description
1	125-1460-01	1	Bracket-Bulkhead, Center
2	240-3	2	Grommet-Rubber
3	127-2314-01	1	Bracket-Bulkhead
4	127-2317-01	1	Bracket-Bulkhead
5	32180-011	3	Clip-Connector
6	112-9630	1	Module-Reel, I.D.
7	99-7435	2	Relay
8	3296-2	2	Nut-Lock, NI
9	99-5107	1	Nut-Lock
10	125-1458-03	2	Bracket-Bulkhead, Rear
12	119-4330	1	Isolated Can Module ASM
13	3234-38	1	Screw-HHF
14	127-2351	10	Screw-CARR
15	104-8301	16	Nut-HF, NI
16	114-4681	1	Screw-HHF
18	3290-321	2	Screw-HWH
19	32104-32	4	Screw-HWH

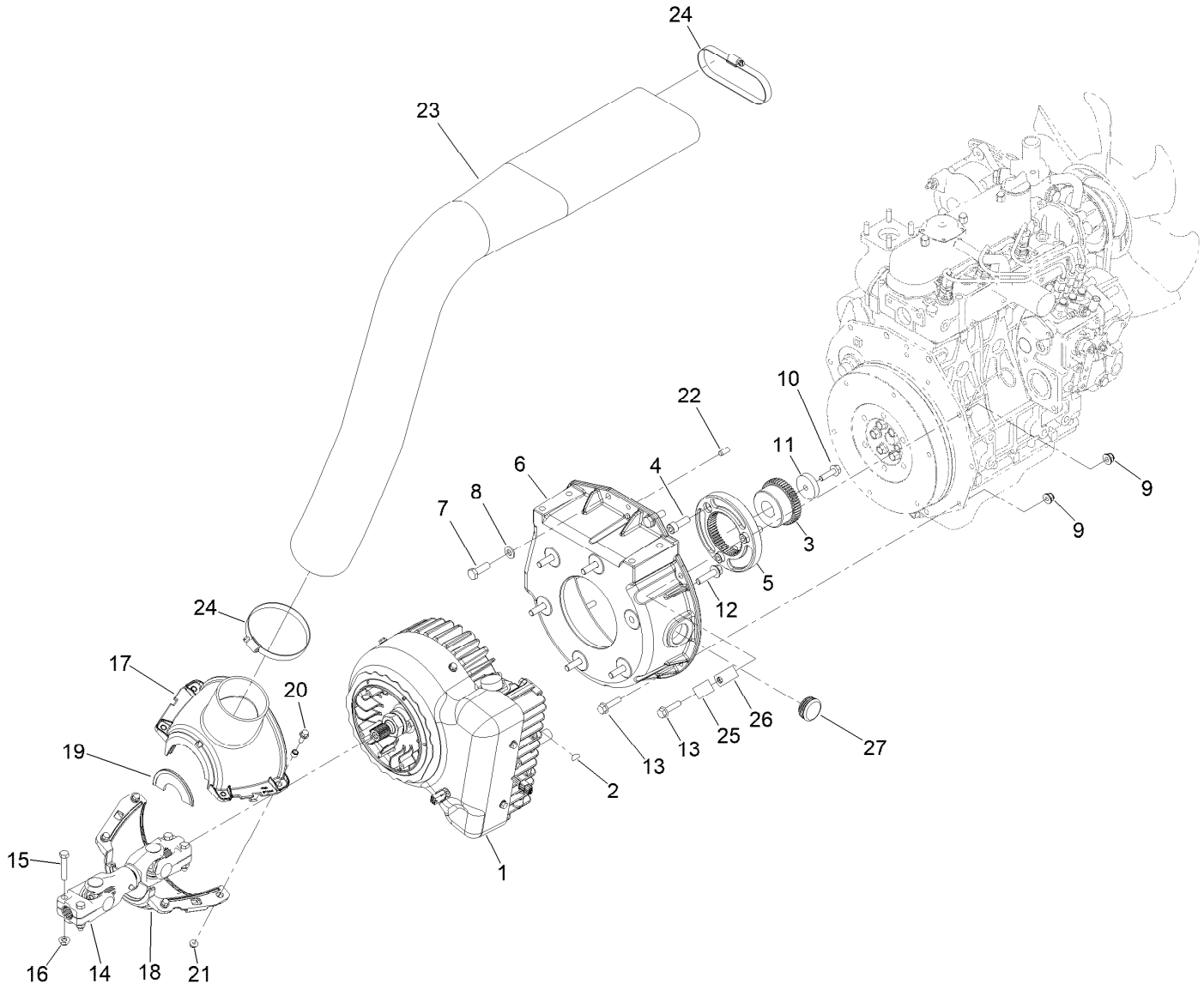

Generator Assembly

Ref.	Part Number	Qty.	Description
1	127-2655	1	Generator/Controller ASM
2	127-2318	1	Key-Woodruff
3	127-2635	1	Hub-Coupler
4	108-1420	3	Screw-HSH
5	125-1179	1	Flange-Coupler
6	127-2380	1	Bellhousing
7	95-8812	2	Screw-HH
8	3256-80	2	Washer-Plain
9	104-3082	2	Nut-Lock, HHF
10	AU100874	1	Screw-HHF
11	127-2374	1	Collar
12	114-4681	6	Screw-HHF
13	33104-035	7	Screw-HHF
14	139-6044	1	Driveshaft ASM

Ref.	Part Number	Qty.	Description
15	323-9	4	Screw-HH
16	104-8301	4	Nut-HF, NI
17	127-2465	1	Shroud ASM
18	127-2442	1	Shroud-Intake, Bottom
19	127-2434	2	Seal-Brush
20	120-9678	4	Screw-HHF
21	104-7201	4	Nut-HF, NI
22	87-1910	2	Pin-Dowel
23	127-2472	1	Hose-Formed
24	2412-46	2	Clamp
25	2412-39	1	Clamp-R
26	2412-41	1	Clamp-R
27	110-9012	1	Caplug

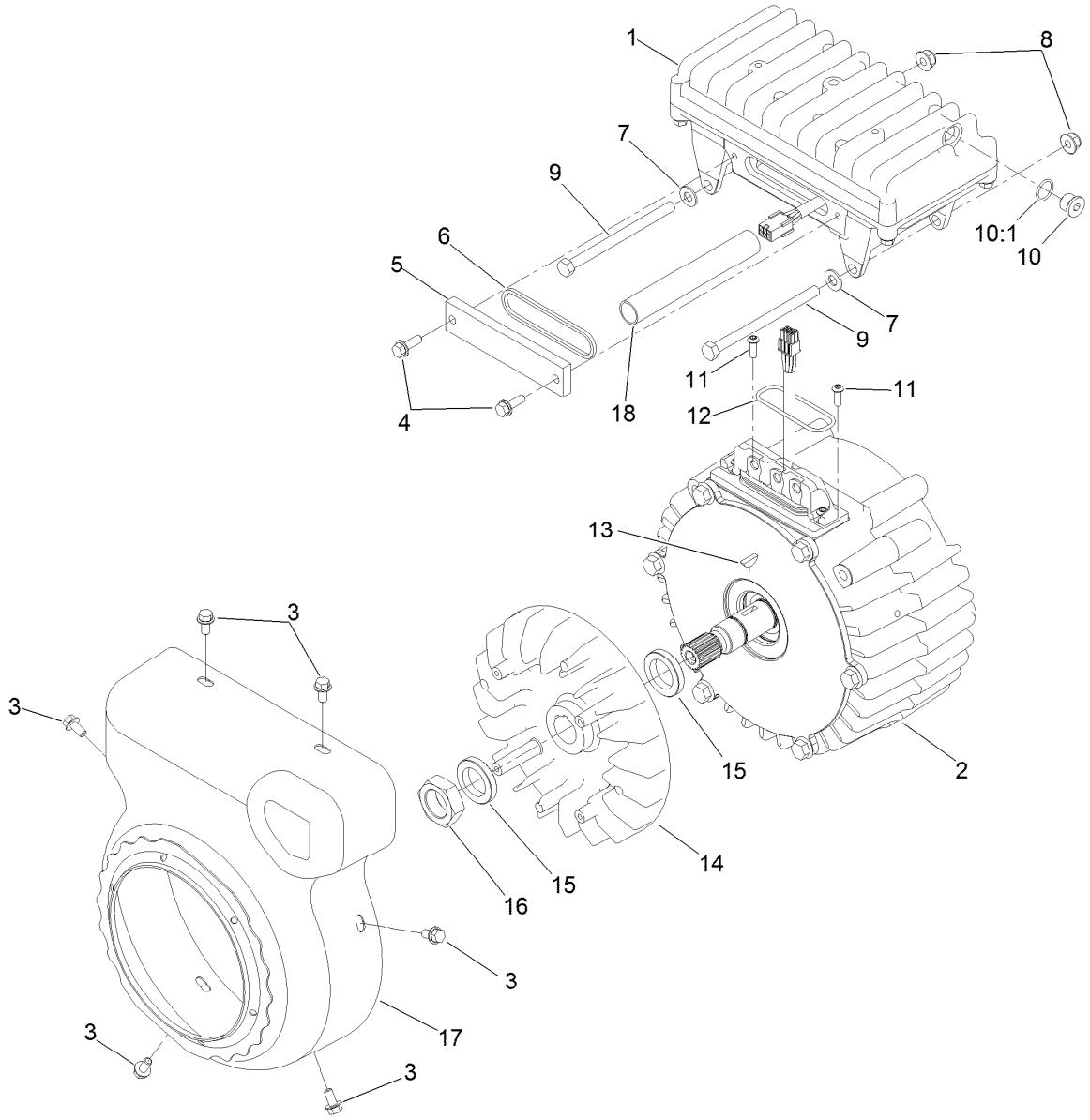

Generator/Controller Assembly No. 127-2655

Ref.	*Part Number*	*Qty.*	*Description*
1	117-8181	1	Controller ASM
2	127-2653	1	Generator Service ASM
3	119-1065	6	Screw-Lock,HF
4	119-1138	2	Screw-HHF,Patch
5	120-4511	1	Cover-Access
6	120-4513	1	Gasket-Cover, Access
7	3256-23	2	Washer-Plain
8	104-8300	2	Nut-HF, NI
9	322-38	2	Screw-HH
10	353-989	1	Plug-Hex, Hollow

Ref.	*Part Number*	*Qty.*	*Description*
10:1	237-42	1	O-Ring
11	119-7568	2	Screw-HSBH
12	117-8176	1	O-Ring
13	127-2318	1	Key-Woodruff
14	125-1188	1	Fan-Generator
15	125-1185	2	Spacer
16	125-1187	1	Nut
17	127-2444	1	Cover-Generator
18	127-2747	1	Sleeve-Harness, Expandable

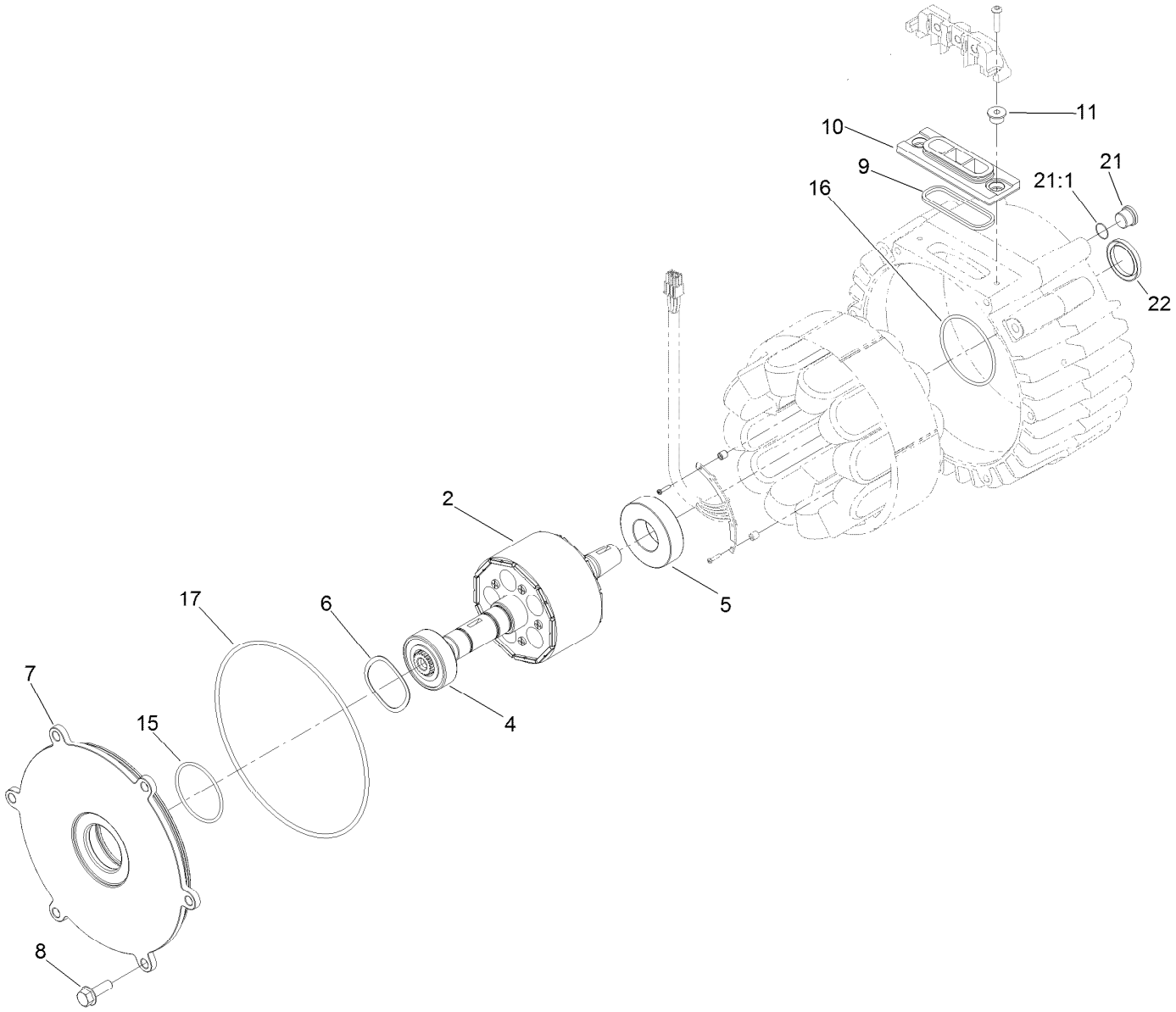

Generator Assembly No. 127-2653

Ref.	*Part Number*	*Qty.*	*Description*
2	127-2651	1	Rotor
4	120-4621	1	Bearing
5	120-4622	1	Bearing
6	117-8148	1	Washer-Wave
7	117-4514	1	Cover-Generator
8	33104-025	6	Screw-HHF
9	120-4518	1	Gasket-Isolator
10	112-5155	1	Isolator-Thermal
11	117-4501	2	Spacer-Shoulder
15	107-3244	1	O-Ring
16	117-8177	1	O-Ring
17	112-5199	1	O-Ring
21	353-989	1	Plug-Hex, Hollow
21:1	237-42	1	O-Ring
22	125-1509	1	Seal

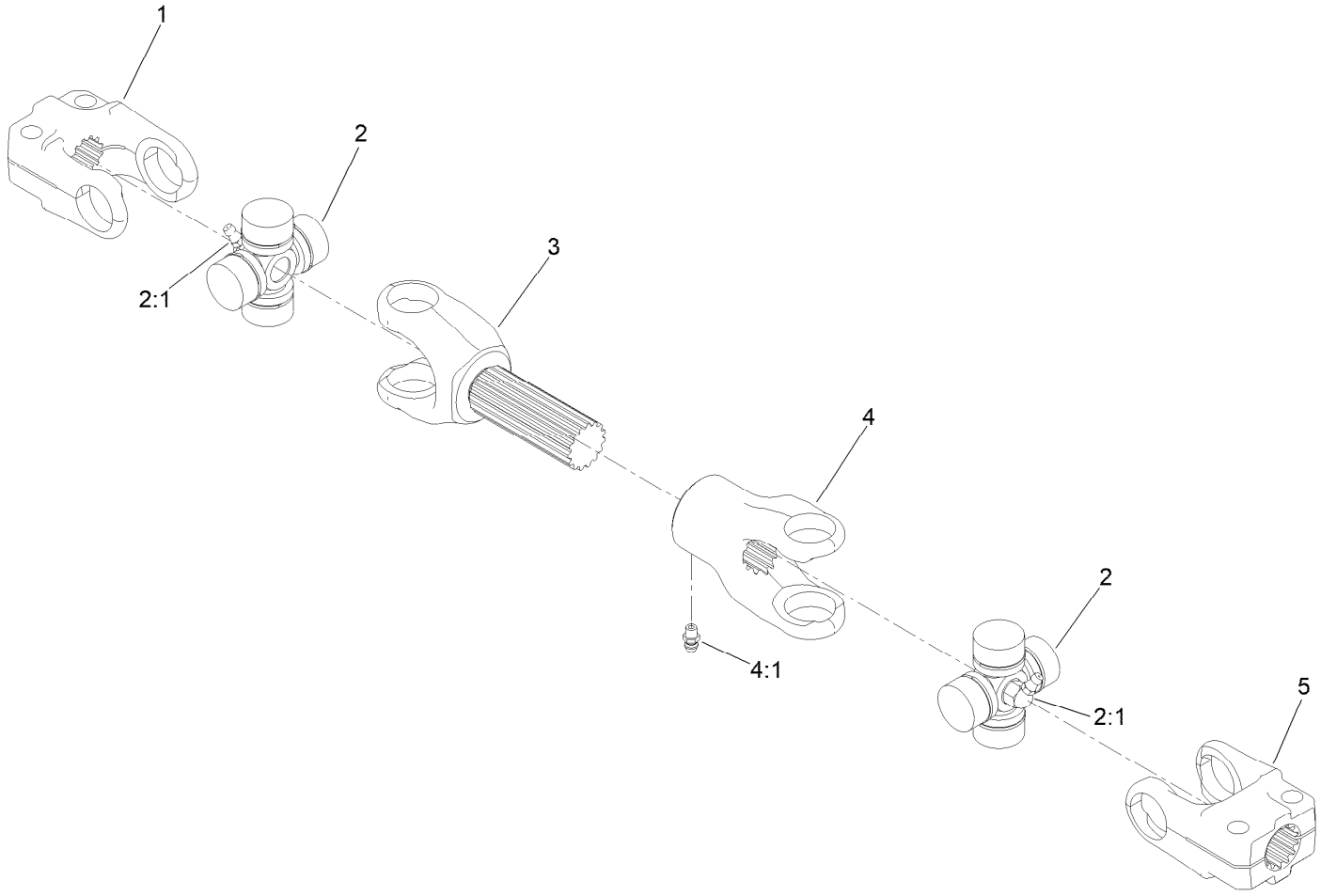

Driveshaft Assembly No. 139-6044

Ref.	*Part Number*	*Qty.*	*Description*
1	54-9040	1	Yoke-End
2	112-1687	2	Cross And Bearing Kit
2:1	62-3820	1	Fitting-Grease
3	127-2553	1	Yoke-Shaft
4	127-2554	1	Yoke-Telescoping
4:1	302-22	1	Fitting-Grease
5	145-2535	1	Yoke-Driveshaft, 13T

Attachments and Accessories

For 03950 Reelmaster 5010-H Traction Unit

Product Name	Model/Part
Operator Cooling Fan	03247
Switch Panel-Universal Sunshade	03248
Operator Golf Ball Guard, Reelmaster 3100/3500/5010 or Groundsmaster 3500/4300 Series Traction Unit	03614
5 Inch Reel Verticutter	03618
Verticutter for 7in Reel Cutting Unit	03619
8-Blade EdgeSeries Radial Reel DPA Cutting Unit with 5in Reel, Reelmaster 5010 Series Traction Unit	03621
11-Blade EdgeSeries Forward Swept Reel DPA Cutting Unit with 5in Reel, Reelmaster 5010 Series Traction Unit	03623
22in 5in 11 Bld (rr) Dpa Cu (5010)	03624
8-Blade Radial Reel DPA Cutting Unit with 7in Reel	03638
8-Blade Forward Swept Reel DPA Cutting Unit with 7in Reel	03639
11-Blade Forward Swept Reel DPA Cutting Unit with 7in Reel	03641
7-in, 11 Blade ES (RR) DPA Cutting Unit	03643
Finishing Kit, DPA Cutting Unit with 5in Reel, Reelmaster 5010-H Series Traction Unit	03651
Finishing Kit, DPA Cutting Unit with 7in Reel, Reelmaster 5010-H Series Traction Unit	03653
CrossTrax All-Wheel Drive Finishing Kit	03656
Air Ride Seat Suspension Kit	03667
Turf Evaluator	04399
Wheel Weight Kit	104-1478
Premium All Purpose Grease (Tube)	108-1190
Weight Plate	110-8985-03
Rear Lift Cylinder Limit Kit	110-9604
5in Air Cleaner Safety Element	114-4057
Premium Synthetic Bio-Degradable Hydraulic Fluid (5 Gallon Pail)	119-2157
Premium Synthetic Bio-Degradable Hydraulic Fluid (55 Gallon Drum)	119-2158
Premium Engine Oil 10w30 (55 Gallon Drum)	121-6392
Premium Engine Oil 10w30 (5 Gallon Pail)	121-6393
Smooth Rear Tire	127-2796
Hi-Back Seat Cover	133-1308
Smooth Front Tire	133-2940
PX Hydraulic Fluid (5 Gal)	133-8086
PX Hydraulic Fluid (55 Gal)	133-8087
Pin and Lanyard Asm	136-8045
Beacon Kit	138-2699
Power Harness Kit (RM5XXX)	138-2994
Work Lights Kit, Groundsmaster and Reelmaster Traction Units with Universal Sunshade	140-1554
MVP Kit-Hyd Hose	145-2576
Mvp Kit 1000 Hour-rm5010-h Kubota D11	145-2581
Brush and Handle Kit	29-9100
White Universal Sunshade	30669
Red Universal Sunshade	30671
EU Light Kit	31579
New Red Paint - Gallon	361-11

Attachments and Accessories (continued)

Dark Metallic Gray Aerosol Paint 361-12
Semi-Gloss Black Spray Paint 361-9
Air Dry Red Paint - Qt 5340
Spark Arrestor 98-9099

Notes:

Notes:

Notes:



Count on it.