FORM NO. 92-3705

TORO®

MODEL NO. 41080-30001 & Up
MODEL NO. 41021-30001 & Up
MODEL NO. 41031-30001 & Up
MODEL NO. 41220-30001 & Up
MODEL NO. 41221-30001 & Up
MODEL NO. 41230-30001 & Up

SET-UP AND PARTS LIST

PRO-CONTROL SPRAY SYSTEM
FOR THE WORKMAN® 3000 VEHICLE

1. Install the TORO APU Electric Clutch Kit as per the instructions provided with that kit.

2. Remove the four bolts and discard the aluminum cover that is located on top of the transaxle. Apply a thin bead of RTV sealer around the outer bottom edge (side opposite tapped hole) of the the new sensor cover. Position the new sensor cover on the transaxle as shown in FIG. 1 and secure with bolts earlier removed. Apply a few drops of oil to the speed sensor and insert into the new sensor cover and secure with the M6-12 screw and M6 lockwasher provided (FIG. 1).

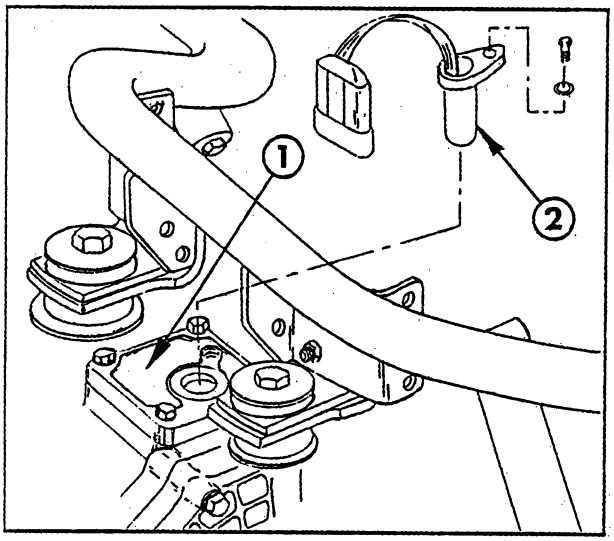

FIG. 1

1. Sensor Cover Assy.
2. Speed Sensor

3. Install the square key into the centrifugal pump shaft key slot. Place the pump pulley on the pump shaft and secure to the shaft using the 5/16" x 3/4" hex hd. cap screw, 5/16" I.D. 10 GA. flat washer, and lockwasher.

4. Attach the idler pivot bracket to the pump by removing the two pump housing bolts and replace with the (2) 3/8"x 1" hex hd. cap screws (FIG. 2).

5. Install one flange bushing into each end of the idler pivot assembly mounting hole and attach to the idler bracket using the 3/8" x 3" hex hd. cap screw and locknut (FIG. 2)

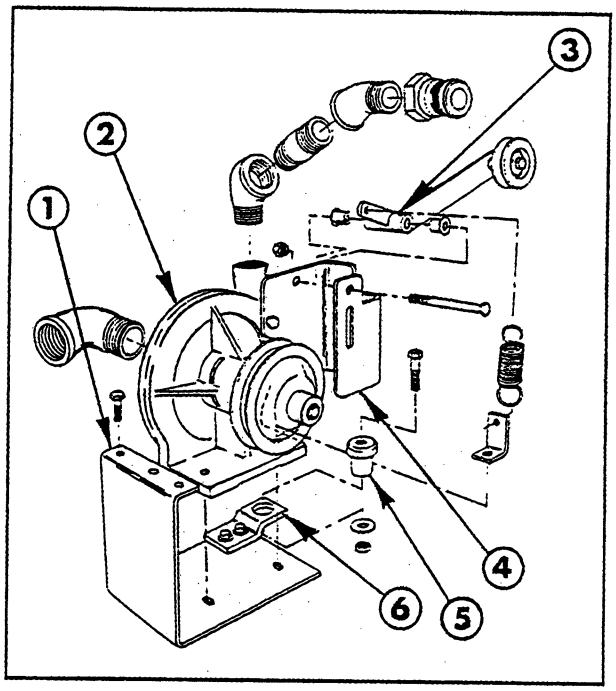

FIG. 2

1. Pump Mounting Brkt.
2. Centrifugal Pump
3. Idler Pivot
4. Idler Pivot Brkt.
5. Rubber Mount
6. Tab Mount

6. Mount the small inside idler pulley on the long arm of the idler pivot using the 3/8" x 2-3/4" hex hd. cap screw, 1-1/8" spacer, and locknut. Attach the tension spring to the short arm of the idler pivot assembly. See FIG. 2.

NOTE: In the following instructions, sealer refers to RTV clear silicone when used for pipe fittings.

7. Next, apply sealer and install the 90 degree x 1-1/4" street elbow into the suction port of the pump. Apply sealer and install the 1"x 3" nipple, (2) 45 degree x 1" elbows, and quick adapter into the discharge port of the pump (FIG. 2).

8. Install the rubber mount into the tab mount and loose fit the tab mount to the pump mounting bracket using the (2) 3/8" x 1" hex hd. cap screws, flatwashers, and locknuts (FIG. 2).

NOTE: For the installation of the pump mounting plate, it is necessary to first remove

©The Toro Company-1993

the rear mounting bolt on the hydraulic valve. If equipped with the auxiliary hydraulic package, it is necessary to remove the last two mounting bolts of this valve. This will allow for the usage of the bolt holes to properly install the pump mounting plate. Reuse the fasteners earlier removed.

9. Attach the pump mount bracket assembly to the left side of the vehicle frame using the (3) 5/16" x 1" hex hd. cap screws, lockwashers, and hex nuts (FIG. 4). Next, attach the tab mount to the crossmember using the 3/8" x 1-1/2" hex hd. cap screw, 3/8" I.D. 10 GA. flat washer, and locknut (FIG. 2). Tighten all fasteners securely.

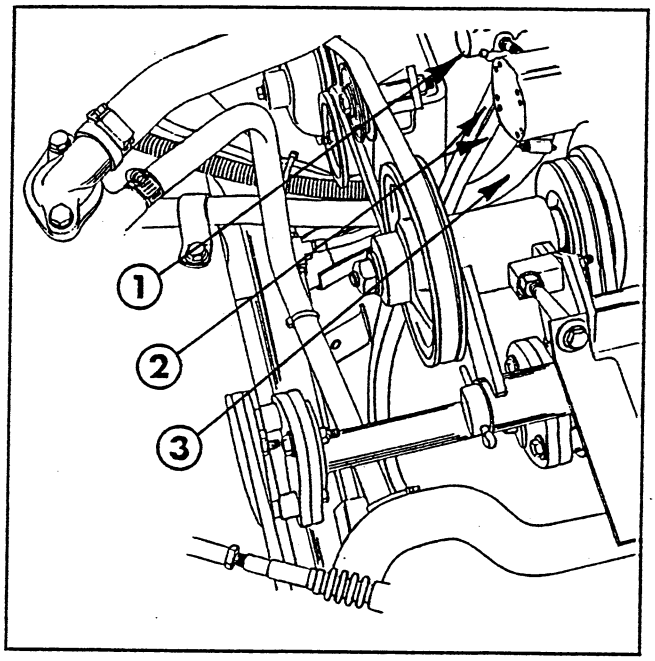

FIG. 3
1. Hydraulic Control Valve
2. R.H. Dump Cylinder Hoses
3. Pump Suction Hose

10. At the hydraulic control valve, loosen and disconnect the fittings for the right hand dump cylinder hoses. Reroute these hoses to the underside of the pump suction hose. Reconnect and tighten fittings, then secure with tie straps. Secure all other hoses and cables with tie straps to ensure they do not rub against pump pulleys and belts. See FIG. 3.

11. Mount the pump and the spring tab to the mounting plate using the (2) 3/8" x 1-1/2" hex hd. cap screws, flat washers, and locknuts. Attach the spring to the spring tab located at the base of the pump (FIG. 2).

12. Apply thread sealer and install the 1-1/4" x 6" nipple, 90 degree x 1-1/4" elbow, 1-1/4" close nipple, suction strainer, reducing nipple, and quick adapter into the suction side of the pump (FIG. 4).

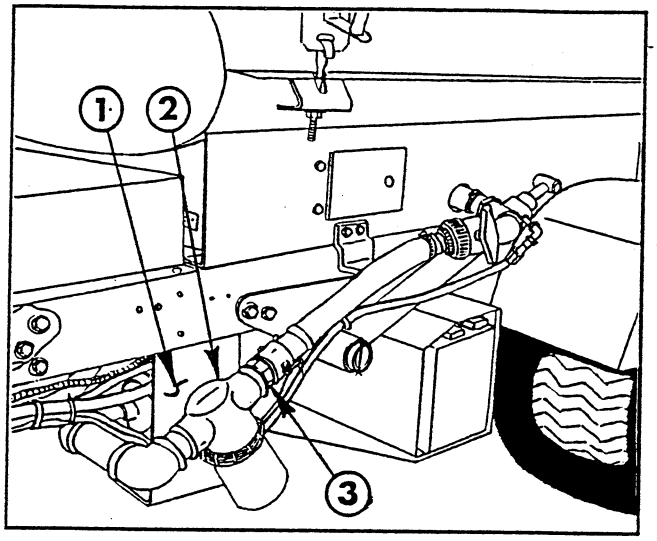

FIG. 4
1. Pump Mounting Brkt.
2. Strainer
3. Quick Coupler

13. Install the pump drive belt on the pulleys as shown in FIG. 5. After installation of the belt, loosely mount the backside idler pulley in the long slot on the idler pivot bracket using 3/8" x 2" carriage bolt, 3/4" spacer, hex nut, lockwasher, and (2) flat washers. With the belt on the topside of the idler pulley, slide the pulley up until all the slack is removed from the belt, then tighten the nut on the carriage bolt. To apply tension to the belt, place the inside idler pulley under the belt. See FIG. 5.

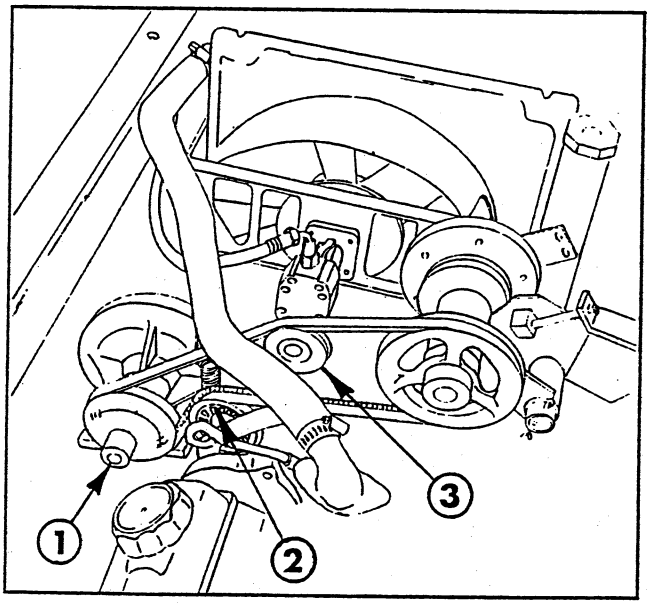

FIG. 5
1. Pump Pulley
2. Backside Idler Pulley
3. inside idler Pulley

NOTE: On models equipped with the diesel engine, the enclosed hose protector and nylon tie must be installed on the lower radiator

hose next to the street elbow in the suction port of the pump. On models equipped with the liquid cooled gas engine, install the hose protector and nylon tie on the upper radiator hose above the pump belt. This is to prevent the hose from wearing through prematurely.

14. Unplug the wire harness connectors from both headlights.

15. Remove (15) screws and washers securing front hood to vehicle frame and remove hood.

16. Temporarily mount the console mounting bracket to the upper dash support using two of the earlier removed machine screws and washers (FIG. 6).

17. Using (2) 1/4" x 1" hex head cap screws, lock washers, and hex nuts, secure the "U" shaped console bracket to the metal console mounting bracket and mount the control console within the "U" shaped bracket using the (2) mounting knobs (FIG. 6).

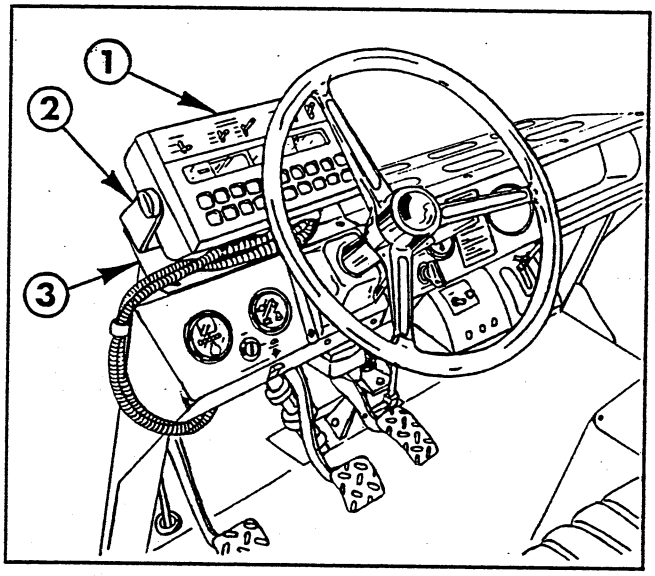

FIG. 6

1. Control Console
2. "U" Console Brkt.
3. Mounting Bracket

18. Connect the console control cable plug to the back of the console. Route the control cable under the dash and through the opening in the floorboard (FIG. 7). Loosen the bolts on the channel under the floorboard and feed the cable through the channel. Connect the extension cable to the console cable and route along the left side of the vehicle to the rear of the vehicle frame.

19. Connect the speed sensor cable plug to the back of the console. Route the speed control cable under the dash, through the opening in the floorboard and through the channel under the floor (FIG. 7). Route the remaining cable along the left side of the vehicle and connect to the speed sensor located on the top of the transaxle.

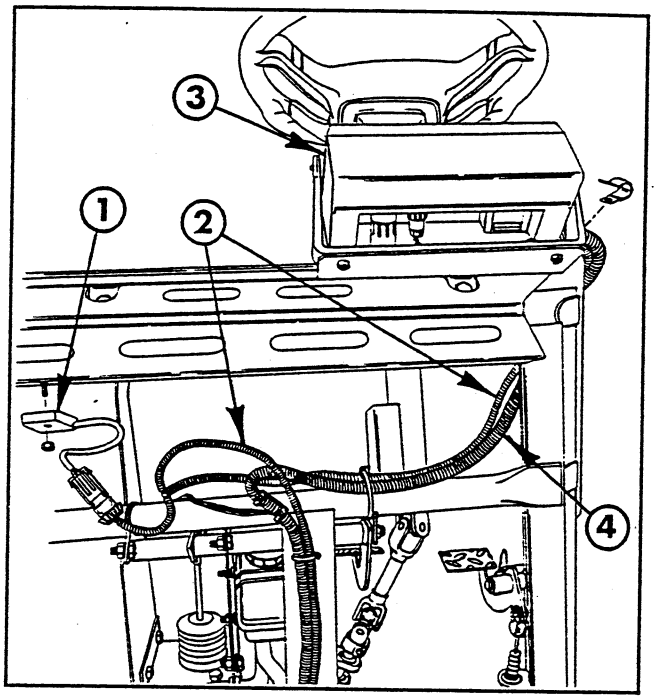

FIG. 7

1. Frequency Divider
2. Speed Sensor Cable
3. Control Console
4. Console Control Cable

20. Locate and mount the frequency divider using the #8 x 1-1/4" machine screw and #8 nut in the existing hole found on the underside of the top dash support frame. See FIG. 7.

21. Plug the connector from the speed sensor cable into the frequency divider (FIG. 7).

22. Re-tighten the bolts on the channel under the floorboard.

23. Turn the "POWER ON/OFF SWITCH" to "OFF".

24. Route the red and white battery wires of the console control cable to the auxiliary fuse block. Connect the red wire to a wire on the fuse block and ground the white wire to the ground terminal bolt.

25. Insert 20 amp fuse into the corresponding slot of the fuse block and affix decal marking fuse for the spray system.

26. Secure all wiring along the vehicle frame and under the dash panel with the plastic cable ties furnished.

NOTE: It may be necessary to leave the hood off to mount other accessories. If so, do not complete steps 27-29 until all other accessories are installed.

27. Remove the (2) screws that hold the console and console mounting bracket to the vehicle.

28. Reinstall the hood and remount the console and console mounting bracket using the 15 screws and washers earlier removed and install the "R" clamp on the console control cable and secure (FIG. 7).

29. Reconnect the wire harness connectors to both headlights.

30. Loosen and remove the (2) 3/8" nuts and attaching bolts that hold the left rear fender to the vehicle frame. Install a 10 GA. flat washer on each bolt and install the bolt through the fender and vehicle frame and mount the tank support bracket with these bolts. Reinstall the nuts and tighten securely. See FIG. 8.

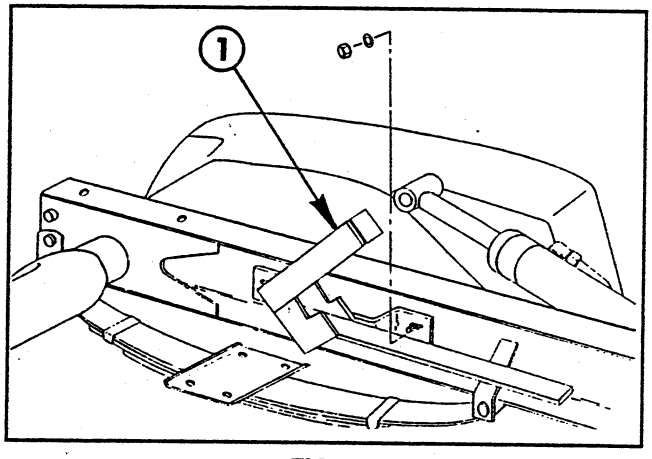

FIG. 8
1. Tank Support Brkt.

31. Cut the shipping straps and remove the Spray Tank and Skid Assembly from the shipping pallet.

32. Install the two trim pieces on the middle and right cutouts at the front of the tank skid.

33. Place the tank and saddle assembly on the vehicle frame. Secure it to the vehicle frame by sliding the (2) 3/4" dia. clevis pins through the rear mounting lugs and the vehicle frame. Secure by installing the (4) lynch pins into the clevis pins. See FIG. 12.

34. Attach the boom hold-in brace assemblies to the (2) 5/16" x 3/4" carriage bolts found on each side of the front tank mounting band using (4) flatwashers and (4) 5/16" hex nuts. Tighten securely (FIG. 9).

35. Attach the boom hold-in assemblies to the hold-in brace assemblies mounted on each side of the front tank mounting band using (4) 1/4" U-bolts and (8) 1/4" lock nuts (FIG. 9).

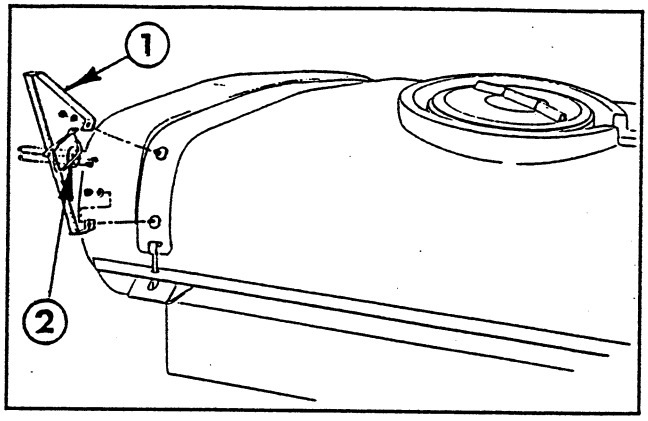

FIG. 9
1. Hold-In Brace
2. Boom Hold-In

36. Raise and support the front of the tank saddle assembly approximately 30 - 40 degrees to gain access to the engine compartment area.

37. Assemble (2) 3/8" long spacers, clevis pin, and cotter pin to one end of the strut support rod (FIG. 10).

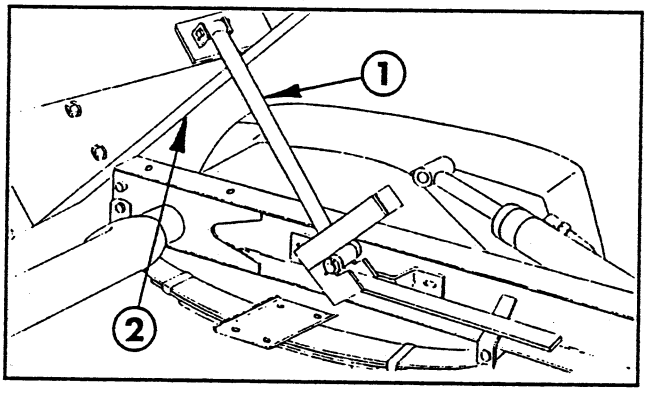

FIG. 10
1. Strut Support Rod
2. Tank Saddle Assy.

38. Insert the end of the rod assembly with installed spacers through the support bracket located on the left side of the vehicle. Attach the other end to the inside of the skid at the rear bulkhead using a clevis pin and cotter pin. See FIG. 10.

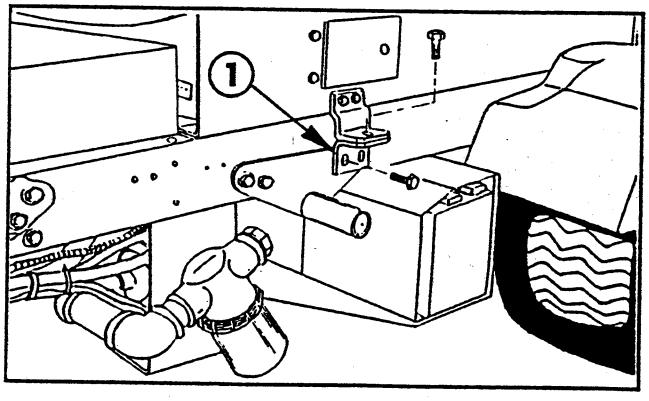

FIG. 11
1. Attachment Mounting Brkt.

39. Locate and remove the (2) 1/2" bolts on each side of the vehicle frame as shown and install the attachment mounting bracket using the bolts earlier removed. Re-tighten the nuts and bolts securely (FIG. 11).

40. Release the strut support rod and lower the tank and saddle assembly.

41. Attach the two boom mount upright angles onto the rear of the tank saddle extensions using (4) 1/2" x 1-1/4" hex hd. cap screws and locknuts (FIG. 12).

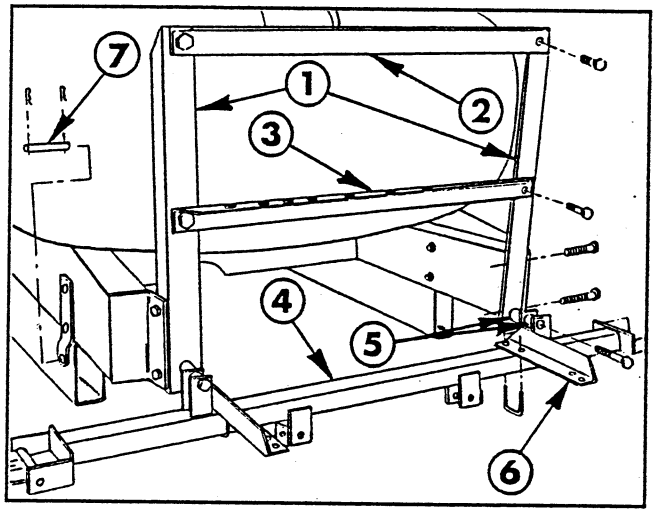

FIG. 12

1. Upright Angles
2. Upper Cross Support
3. Lower Cross Support
4. Boom Main Frame
5. Spacer Tubes
6. Center Boom Angle
7. 3/4" Clevis Pin

NOTES: Steps 42-44 apply to the assembly of the standard boom only. If the optional "Boom Pivot Kit" is to be installed, see the instructions furnished with that kit. The lower cross support to be used with that kit is different than the support used on the standard boom.

42. Position the lower cross support angle and attach it to the boom mount upright arms with (2) 1/2" x 1-1/4" hex hd. cap screws and locknuts (FIG. 12).

43. Position the upper cross support angle and attach it to the boom upright angles with (2) 1/2" x 1-1/4" hex hd. cap screws and locknuts. See FIG. 12.

44. Position the spacer tubes between the boom mount upright angles and the lugs on the main frame tube. Use (2) 1/2" x 4" hex hd. cap screws and locknuts to secure the main frame tube to the uprights (FIG. 12).

45. Position the two center boom angles on the main frame tube and secure them to the frame tube with (2) square U-bolts, (4) flatwashers, and (4) hex nuts (FIG. 12).

46. Center and attach the center boom pipe to the center boom angles with two clamps, 3/8" x 1" hex hd. cap screw, washers and lock nuts (FIG. 13).

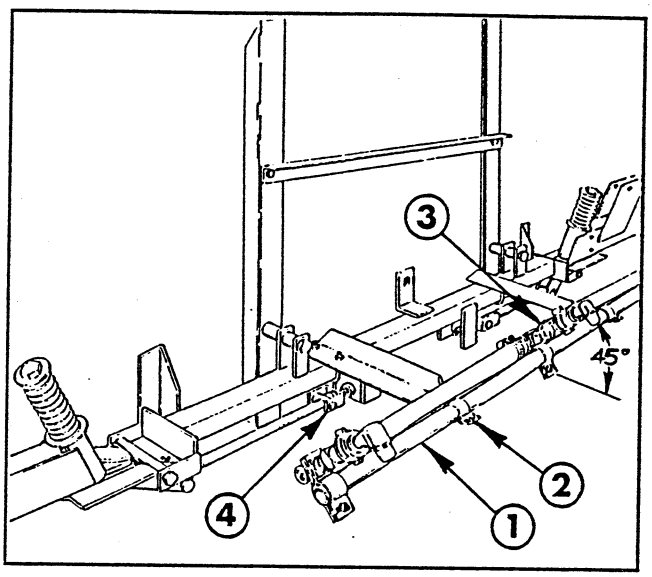

FIG. 13

1. Center Boom Pipe
2. Boom Clamp
3. Triple Barb Nozzle
4. Adjustable Clevis Assy.

47. Loosely attach the triple barb nozzle assembly in the approximate center of the center boom pipe. For most uniform spray coverage, position all nozzle assemblies at a 45 degree angle. Tighten clamp screw to secure the nozzle to the boom pipe. See FIG. 13.

48. Loosely attach a single barb nozzle assembly to each end of the center boom pipe. Place two hose clamps on the two 3/4" x 19" jumper hoses and connect the single barb nozzles to the triple barb nozzle. Tighten all fasteners securely (FIG. 13).

49. Attach the strut assemblies to the adjustable clevis assemblies found on each side of the main frame tube with (2) 1/2" x 2" clevis pins and (2) 1/8" x 1" cotter pins (FIG. 13).

IMPORTANT: Do not over tighten nuts in steps 50 & 52. The clamping action could crush the boom pipe.

50. Insert the plugged end of an extension boom pipe into the pivot assembly and secure with (4) 1/4" x 1-1/4" hex hd. cap screws and locknuts. Repeat on the opposite side to assemble the other extension boom (FIG. 14).

51. Attach the boom support assembly to the pivot assembly, using a 5/16"x 1-1/2" screw and locknut (FIG. 14).

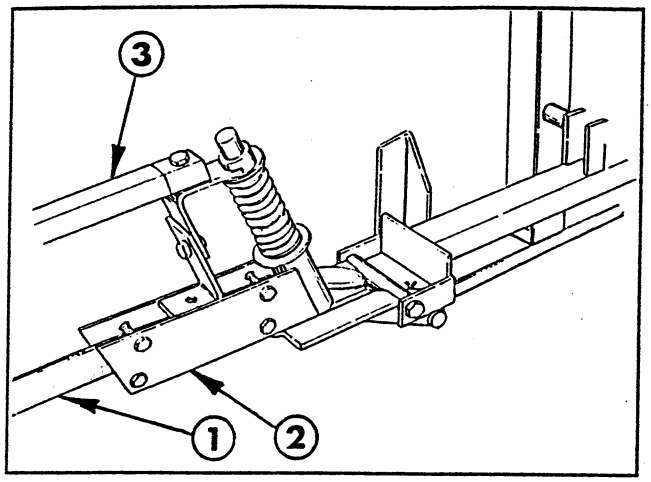

FIG. 14

1. Extension Boom Pipe
2. Pivot Assembly
3. Boom Support Assy.

52. Secure the two plates of boom support assembly to the extension boom pipe, using (2) 1/4" U-bolts, (4) flatwashers, and (4) locknuts (FIG. 15).

53. Assemble the boom support assembly to the other extension boom pipe.

54. At the adjustable clevis assemblies (See FIG. 13), adjust the booms to the level position by adjusting the jam nuts to the desired position, then tighten the end nuts against the boom frame support member.

55. Attach three double barb and one single barb nozzle assemblies on each extension boom pipe as shown in FIG. 15. Nozzles are to be spaced on 20" centers. Connect the nozzle assemblies with the 3/4" x 19" jumper hoses. Secure with hose clamps.

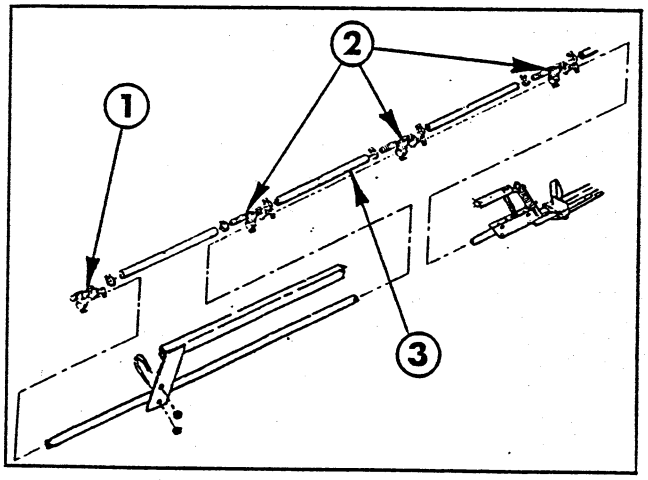

FIG. 15

1. Single Barb Nozzle
2. Double Barb Nozzle
3. Jumper Hose

56. Apply thread sealer and install the 1" x 3/4" reducing nipple in the outlet port of the motorized control valve and the 1" hose barb in the inlet port. Connect the motorized control valve and the solenoid assembly by screwing the two together. See FIG. 16.

57. Apply thread sealer and install three hose barbs into the bottom of the solenoid assembly. Install 3/4" x 1/4" reducer bushing and 1/4" x 3/8" hose barb in the end of solenoid assembly. See FIG. 16.

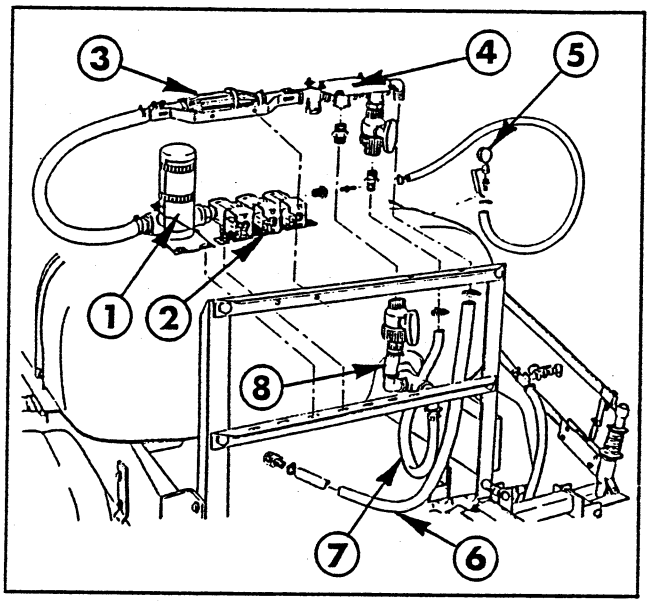

FIG. 16

1. Motorized Control Valve
2. Solenoid Assembly
3. Flow Meter
4. Tee Assembly
5. Pressure Gauge
6. Supply Hose
7. Agitator Hose
8. Connector Hose

58. Loosely attach the control valve bracket to the lower cross support with (2) 5/16" x 1" hex hd. cap screws, washers, and nuts.

59. Slide the solenoid mounting strap into position and mount the complete control valve and solenoid assembly to the cross support as shown in FIG. 16. Use (4) 5/16" x 1" hex hd. cap screws with (10) washers and (4) nuts. Place four washers on top of the mounting strap, two at each end in between the strap and the cross support, and four under the cross support.

60. Secure the control valve to it's mounting bracket with the large hose clamp. Tighten all fasteners securely.

61. Connect the boom feeder hoses to the barbs with hose clamps. The (2) 3/4" x 50" hoses are to be attached to the hose barbs in the left and right solenoids. The 3/4" x 36" hose is to be attached to the barb in the center solenoid.

62. Place a hose clamp on the center boom feeder hose and attach it to the triple barb nozzle on the center boom pipe.

63. Place a hose clamp on the right and left boom feeder hoses and attach them to the double barb nozzles on the right and left extension boom pipes.

64. Assemble the pressure gauge and the 3/8" hose barb to the gauge bracket. Remove the protective cap and mount the bracket to the carriage bolt in the rear tank band, using a 5/16" hex nut and lock washer (FIG. 16).

65. Connect the pressure gauge to the solenoid assembly with the 3/8" x 36" hose. Secure the hose with hose clamps (FIG. 16).

66. Apply sealer and install the 1" x 1-1/4" hose barb into the end of the tee assembly and a 1" x 3/4" hose barb into the existing ball valve of the tee assembly (FIG. 16).

67. Remove the pipe plug in the bottom of the middle tee. Apply sealer and install a 1" close nipple, 1" ball valve, and a 1" x 1" hose barb (FIG. 16).

68. Mount the tee assembly and bracket to the upper cross support with (2) 5/16" x 1" hex hd. cap screws, flat washers, lockwashers, and nuts (FIG. 16).

69. Install a 1-1/4" x 3" connector hose on each end of the flowmeter and secure with hose clamps. Install the 1-1/4" x 1" hose barb adapter into the connector hose that is on the outlet port of the flowmeter.

70. Mount the flowmeter bracket to the upper crossmember using (2) 5/16" x 1" hex hd. caps screws, flatwashers, lockwashers, and nuts. See FIG. 16.

71. Slide the inlet end of the flowmeter assembly on the 1-1/4" hose barb found in the tee assembly. Secure with a hose clamp. See FIG. 16.

72. Secure the flowmeter assembly to the mounting bracket with the two large hose clamps.

73. Connect one end of the 1" x 30" hose to the motorized control valve and connect the opposite end to the adapter in the flowmeter connector hose. Secure with hose clamps (FIG. 16).

74. Apply sealer and install the 1" 90 degree hose barb in the rear tank tee (FIG. 16).

75. Install a 1" quick coupler on the end of the 1" x 100" supply hose and secure with a hose clamp. Connect the supply hose to the discharge port on the pump with the quick coupler. Route the hose along the left side of the vehicle under the tank, connect the other end of hose to the hose barb on the right side of the tee assembly and secure with a hose clamp. See FIG. 16. Secure hose at cable mounting bracket and rear cross member with tie straps.

76. Install the protective hose loom on the 100" pressure hose as shown in FIG. 17. Secure the loom to the hose by tightening a tie strap around each end of the loom so that the loom does not shift front to rear.

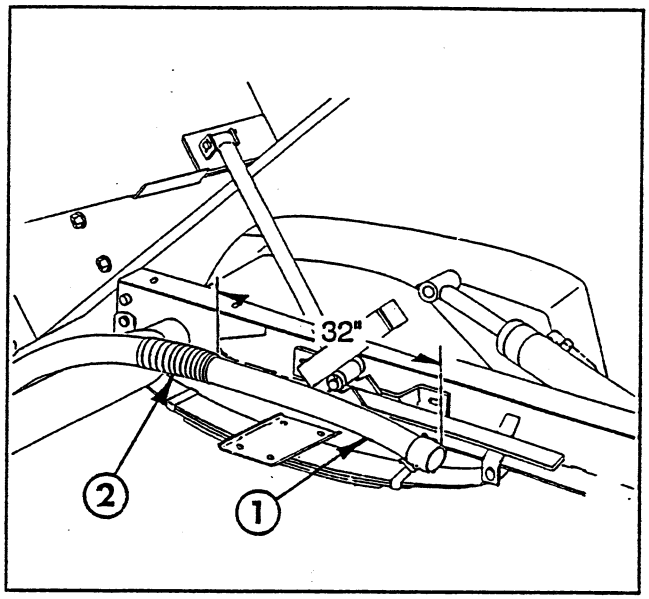

FIG. 17

1. 100" Supply Hose
2. Protective Loom

77. Connect the 3/4" x 28" agitator hose to the first ball valve and connect the other end to the hose barb on the rear of the tank. Secure the hose with hose clamps (FIG. 16).

78. Connect the 1" x 5" connector hose between the ball valve in the center tee and the 90 degree hose barb in the left side of the rear tank tee. See FIG 16. Secure with hose clamps.

79. Locate the extension cable and connect it to the flowmeter cable then, make connections to the motorized control valve and the electric solenoid valves (black wire on left solenoid, brown on middle solenoid, blue on right solenoid, and a white jumper on all three solenoids). Secure the cables to the vehicle frame and boom frame with the tie straps provided.

80. Raise and support the tank/skid assembly with the strut rod support.

81. Mount the radiator cover to the vehicle frame using the (4) 3/8" x 1" hex hd. cap screws and (4) flat washers. On some models, it may be necessary to use the (2) nuts provided to mount the cover at the rear mounting holes.

82. Release the strut rod and lower the tank skid assembly.

83. Secure the tank skid to the vehicle frame by installing the (2) 1/2" bolts, (4) washers, and (2) locknuts through the attachment mounting brackets (FIG. 11). Tighten fasteners securely.

84. Attach the suction hose to the suction strainer using the quick couplers.

85. Recheck and tighten all fasteners and hose clamps securely.

86. Fill the tank with clean water and check for any leaks.

87. Refer to the Pro-Control Operator's Manual for the proper calibration and operation of the Pro-Control Spray System.



Part No. 75-5190: Located on Radiator Cover top, front & rear (2).



Part No. 92-2663: Located at Fuse Block (1).

Part No. 80-8040: Located on Radiator Cover top, front & rear (2).



Part No. 36-3400: Located on Radiator Cover, top sides (2).



Part No. 87-0570: Located on rear Tank Band (2).



Part No. 92-2669: Located on Tank Skid - left side @ strut (1).

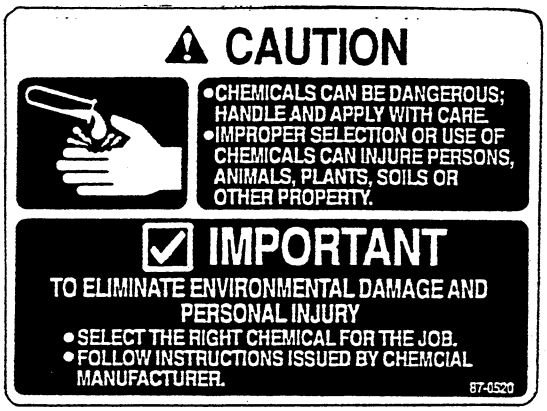

Part No. 87-0520: Located on Tank Lid (1).



Part No. 92-2668: Located on Tank sides (2).

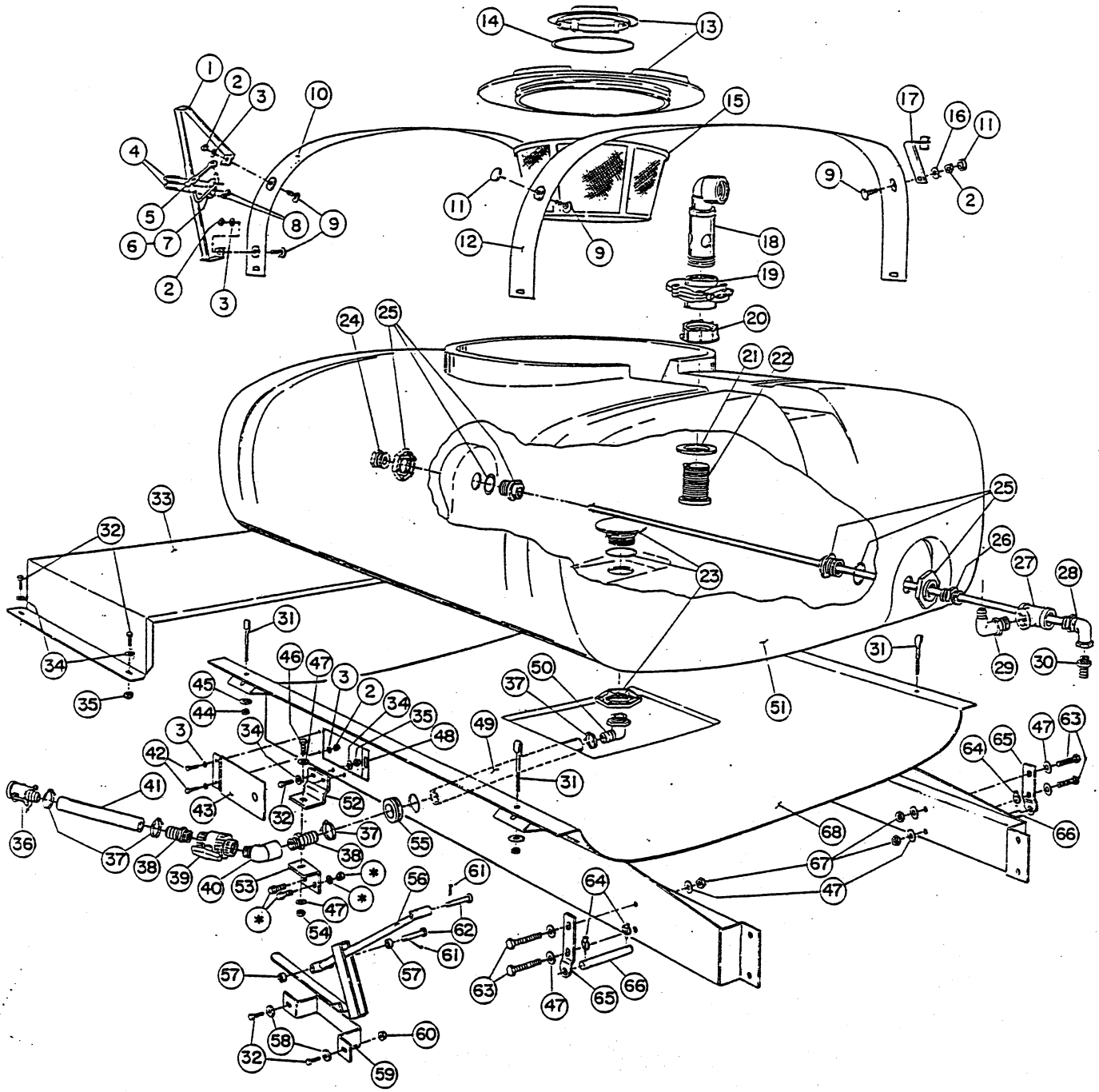

SKID & TANK (200)

* Indicates fasteners included with the vehicle.

SKID & TANK (200)

REF	PART NO.	DESCRIPTION	QTY
1	42983	Hold-In Brace Assy.	2
2	22-12-AJD	Hex Nut, 5/16 NC	10
3	24-10-BD	Flatwasher, 5/16 S.A.E.	12
4	92-0010	U-Bolt, 1/4 NC	4
5	42198	Rubber Hold-Down Strap	2
6	42259	Boom Hold-In Assy - L.H. (shown)	1
7	42316	Boom Hold-In Assy - R.H. (opposite)	1
8	22-11-AJFD	Lock Nut, 1/4 NC	8
9	25-25-AGD	Carriage Bolt, 5/16 NC x 3/4	6
10	92-3666	Tank Band - Front	1
11	42452	Protective Cap	2
12	92-3667	Tank Band - Rear	1
13	42322	Tank Lid (f/w Tank Assy.)	1
14	42859	Breather Gasket (f/w Tank Assy.)	1
15	42323	Filler Basket - 16" (f/w Tank Assy.)	1
16	23-10-GD	Lock Washer, 5/16	1
17	42277	Pressure Gauge Bracket	1
18	43069	Stand-Up Assy	1
19	43064	Knife Valve	1
20	43068	Fly Nut, 2" NPT	1
21	43067	Sealing Washer	1
22	43066	Bulk Head, 2" NPT	1
23	41798	Anti-Vortex Fitting, 1-1/4 NPT (f/w Tank Assy)	1
24	41315	Hex Plug, 1" MPT	1
25	41800	Tank Fitting, 1" NPT (f/w Tank Assy.)	2
26	41304	Close Nipple, 1" NPT	1
27	41305	Tee, 1" NPT	1
28	92-3630	Agitator Tube Assy	1
29	41140	90° Elbow, 1" MPT x 1" HB	1
30	41257	Hose Barb, 3/4 MPT x 3/4 HB	1
31	92-3668	"J"-Bolt	4
32	20-47-AGD	HHCS, 3/8 NC x 1"	10
33	92-3686	Radiator Cover	1
34	24-11-BD	Flatwasher, 3/8	12
35	22-13-AJD	Hex Nut, 3/8	6
36	40480	Female Quick Coupler, 1" HB	1
37	21146	Hose Clamp	4
38	92-0012	Hose Barb, 1" MPT x 1" HB	2
39	40020	Ball Valve, 1" NPT	1
40	41307	90° St. Elbow, 1" NPT	1
41	92-3678	Suction Hose, 1" x 15"	1
42	20-24-AGD	HHCS, 5/16 NC x 3/4	4
43	92-0135	Door Assy.	2
44	22-14-AJD	Hex Nut, 7/16 NC	4
45	24-12-AD	Flatwasher, 7/16	4
46	20-87-AGD	HHCS, 1/2 NC x 1-1/2"	2
47	24-13-BD	Flatwasher, 1/2 S.A.E.	12
48	92-3700	Door Magnet	2
49	92-3677	Suction Hose, 1" x 30"	1
50	42057	90° Elbow, 1-1/4" MPT x 1" HB	1
51	92-3517	Tank Assembly - 200 gal.	1
52	92-0159	Front Mtg. Bracket	2
53	92-2667	Attachment Mtg. Bracket	2
54	22-15-AJFD	Lock Nut, 1/2 NC	2
55	40764	Grommet	1
56	92-3750	Strut Assy.	1
57	92-0303	Pivot Spacer	2
58	356308	Washer, #10 ga.	2
59	92-3690	Strut Support Bracket Assy	1
60	321397	Flanged Nut, 3/8	2
61	28-18-D	Cotter Pin, 1/8 x 1"	2
62	42195	Clevis Pin, 1/2 x 2"	2
63	20-92-AGD	HHCS, 1/2 NC x 2-3/4"	4
64	92-1298	Lynch Pin	4
65	92-0158	Pivot Lug	2
66	92-1233	Clevis Pin, 3/4 x 4-7/16"	2
67	22-15-AJD	Hex Nut, 1/2 NC	4
68	92-3654	Skid Assy.	1
	92-3752	Cutout Trim	1
	92-3753	Cutout Trim	1

* Indicates fasteners included with the vehicle.

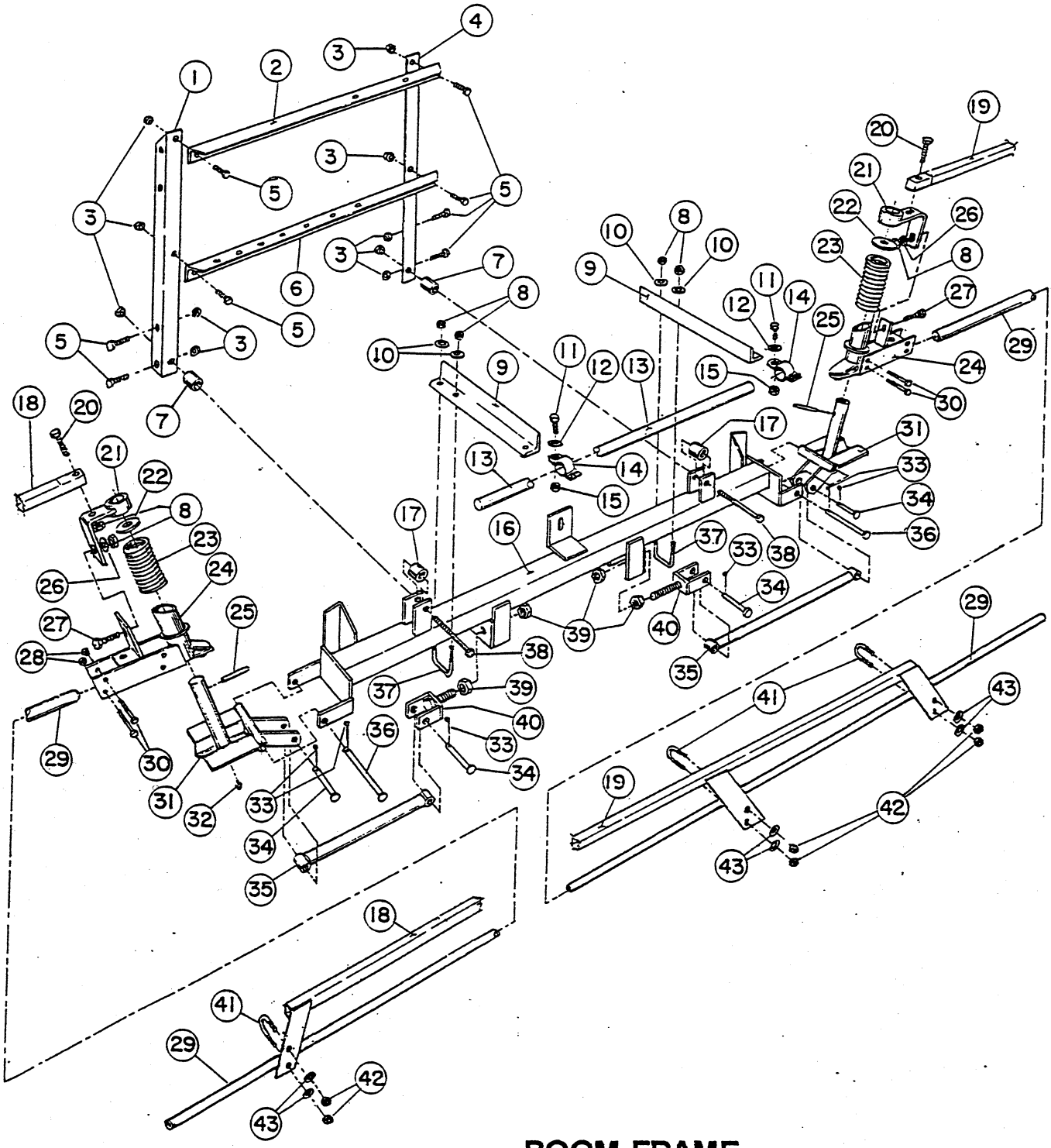

BOOM FRAME

BOOM FRAME

REF	PART NO.	DESCRIPTION	QTY
1	92-3671	Boom Mounting Angle - L.H.	1
2	92-3672	Cross Angle - Upper	1
3	22-15-AJFD	Lock Nut, 1/2 NC	10
4	92-3670	Boom Mounting Angle - R.H.	1
5	20-86-AGD	HHCS, 1/2 NC x 1-1/4	8
6	42225	Cross Support Angle	1
7	42258	Spacer Tube, 1-1/4" Lg.	2
8	22-12-AJD	Hex Nut, 5/16 NC	8
9	42234	Center Boom Angle	2
10	24-10-AD	Flatwasher, 5/16	4
11	20-47-AGD	HHCS, 3/8 NC x 1"	2
12	24-11-AD	Flatwasher, 3/8	2
13	40493	Center Boom Pipe	1
14	40494	Clamp Assy.	2
15	22-13-AJFD	Lock Nut, 3/8 NC	2
16	42227	Main Frame Tube-Welded Assy.	1
17	42257	Spacer Tube, 1" Lg.	2
18	42711	Boom Support Assy. - L.H.	1
19	42710	Boom Support Assy. - R.H.	1
20	20-28-AGD	HHCS, 5/16 NC x 1-1/2"	2
21	42707	Support Bracket Assy.	2
22*	24-18-BD	Flatwasher, 1" S.A.E.	2
23*	42196	Compression Spring	2
24*	42706	Breakaway Pivot Assy.	2
25*	29-199-C	Spring Pin, 1/4 x 2"	2
26	24-10-BD	Flatwasher, 5/16 S.A.E.	2
27	25-25-AGD	Carriage Bolt, 5/16 NC x 3/4	2
28	22-11-AJFD	Lock Nut, 1/4 NC	8
29	42282	Extension Boom Pipe Assy.	2
30	20-8-AGD	HHCS, 1/4 NC x 1-3/4	8
31*	42243	Hinge Assy.	2
32*	361011	Grease Fitting	2
33	28-18-D	Cotter Pin, 1/8 x 1"	6
34	42195	Clevis Pin, 1/2 x 2"	4
35	42240	Strut Assy.	2
36	42194	Clevis Pin, 1/2 x 4-1/2"	2
37	301950	U-Bolt, 5/16 NC	2
38	20-97-AGD	HHCS, 1/2 NC x 4"	2
39	22-17-AJD	Hex Nut, 5/8 NC	4
40	42237	Adjustable Clevis Assy.	2
41	92-0010	U-Bolt, 1/4 NC	4
42	22-11-AJFD	Lock Nut, 1/4 NC	8
43	24-9-AD	Flatwasher, 1/4	8

* Denotes parts that are available in an assembled unit.
Order #42840 Breakaway Assembly.

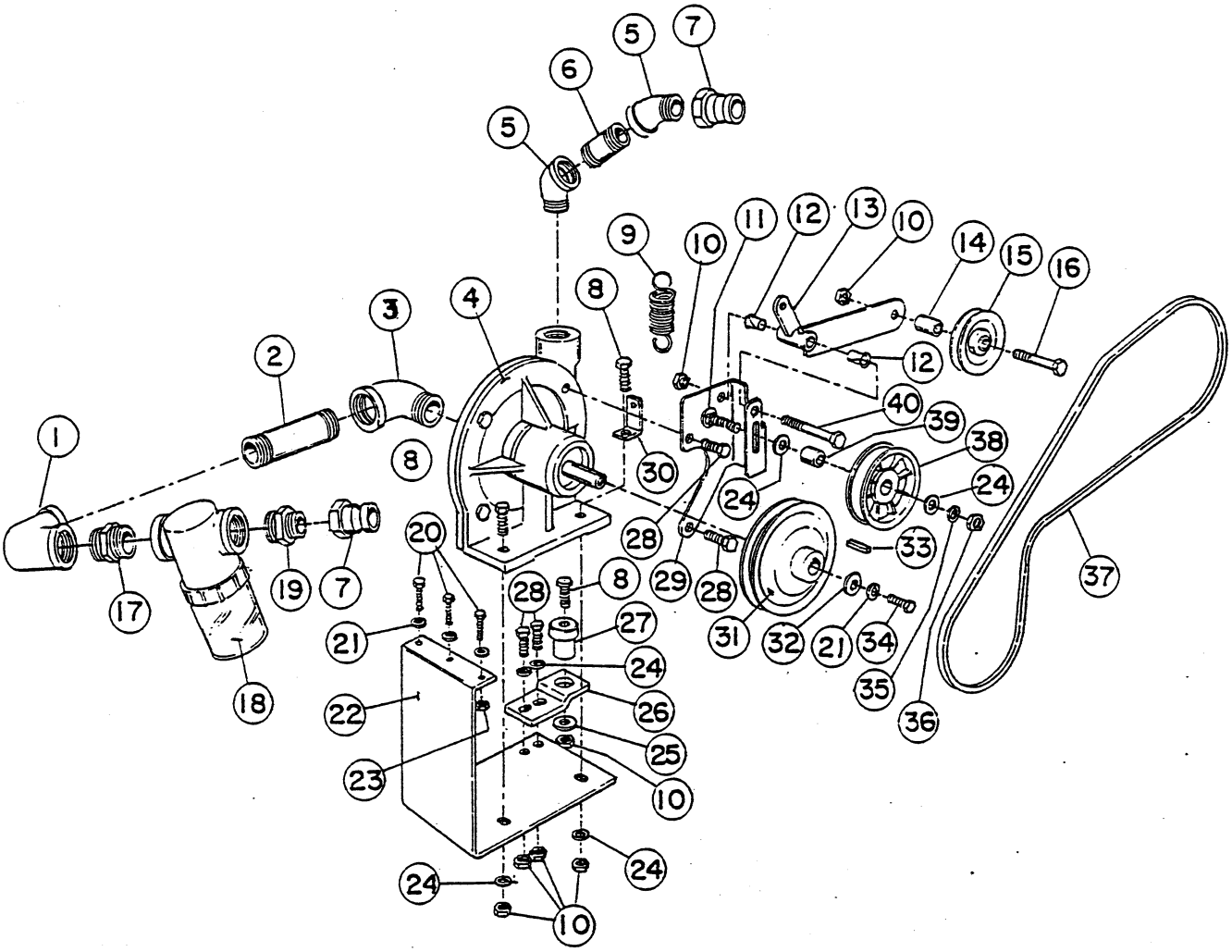

SPRAYER PUMP ASSEMBLY (3000)

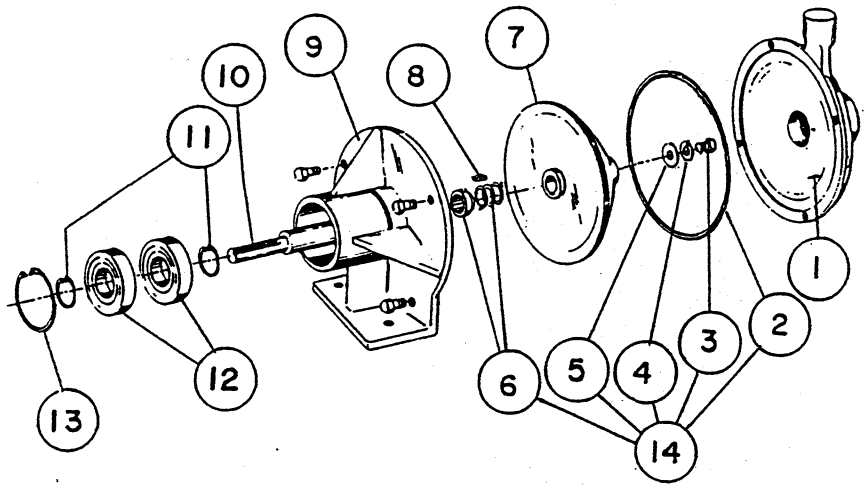

CENTRIFUGAL PUMP (97802)

SPRAYER PUMP ASSEMBLY (3000)

REF	PART NO.	DESCRIPTION	QTY
1	9951	90° Elbow, 1-1/4" NPT	1
2	92-3729	Nipple, 1-1/4 MPT x 6"	1
3	5703	90° St. Elbow, 1-1/4" NPT	1
4	97802	Centrifugal Pump	1
5	5706	45° St. Elbow, 1" NPT	2
6	92-3731	Nipple, 1" MPT x 3"	1
7	41316	Quick Adaptor, 1" FPT	2
	41318	Dust Cap	2
8	20-49-AD	HHCS, 3/8 NC x 1-1/2"	3
9	67-1440	Tension Spring	1
10	22-13-AJFD	Lock Nut, 3/8	7
11	3231-7	Carriage Bolt, 3/8 NC x 2"	1
12	52-2890	Nyliner Bushing	2
13	92-3740	Idler Bracket	1
14	92-3701	Idler Spacer (Inside)	1
15	68-0030	Idler Pulley (Inside)	1
16	20-54-AGD	HHCS, 3/8 NC x 2-3/4"	1
17	92-0050	Close Nipple, 1-1/4" MPT	1
18	42701	Suction Strainer	1
	42702	Strainer Screen (f/w 42701)	AR
	42703	Strainer Gasket (f/w 42701)	AR
19	42992	Reducing Nipple, 1-1/4" MPT x 1" MPT	1
20	20-26-AGD	HHCS, 5/16 NC x 1"	3
21	23-10-GD	Lock Washer	4
22	92-3725	Pump Mounting Bracket	1
23	22-12-AJD	Hex Nut, 5/16 NC	3
24	24-11-AD	Flatwasher, 3/8	4
25	356308	Special Washer	1
26	92-3726	Tab Mount	1
27	63-9750	Rubber Mount	1
28	20-47-AGD	HHCS, 3/8 NC x 1"	4
29	92-3742	Idler Pivot Assy	1
30	92-3741	Spring Tab	1
31	92-2629	Pump Pulley	1
32	356303	Special Washer	1
33	92-0049	Sq. Key, 3/16 x 1-1/4"	1
34	20-24-BGD	HHCS, 5/16 NF x 3/4	1
35	23-11-GD	Lock Washer, 3/8	1
36	22-13-AJD	Hex Nut, 3/8 NC	1
37	54-1360	Drive Belt	1
38	41353	Idler Pulley (Backside)	1
39	92-3746	Idler Spacer (Backside)	1
40	20-55-AD	HHCS, 3/8 NC x 3"	1

CENTRIFUGAL PUMP (97802)

REF	PART NO.	DESCRIPTION	QTY
1	27474	Volute	1
2	92-0018	O-Ring	1
3	27484	Cap Screw, 5/16 x 1/2 SS	1
4	27485	Lock Washer, 5/16 Stainless Steel	1
5	27487	Flat Washer, 5/16 Stainless Steel	1
6	27478	Shaft Seal	1
	41740	Optional Heavy-Duty Seal	1
7	27481	Impeller	1
8	27486	Square Key, 3/16 x 1/2 Stainless Steel	1
9	27476	Frame	1
10	27477	Shaft, Stainless Steel	1
11	27483	Lock Ring	1
12	27479	Bearing	2
13	27480	Lock Ring	1
14	27490	Repair Kit	AR

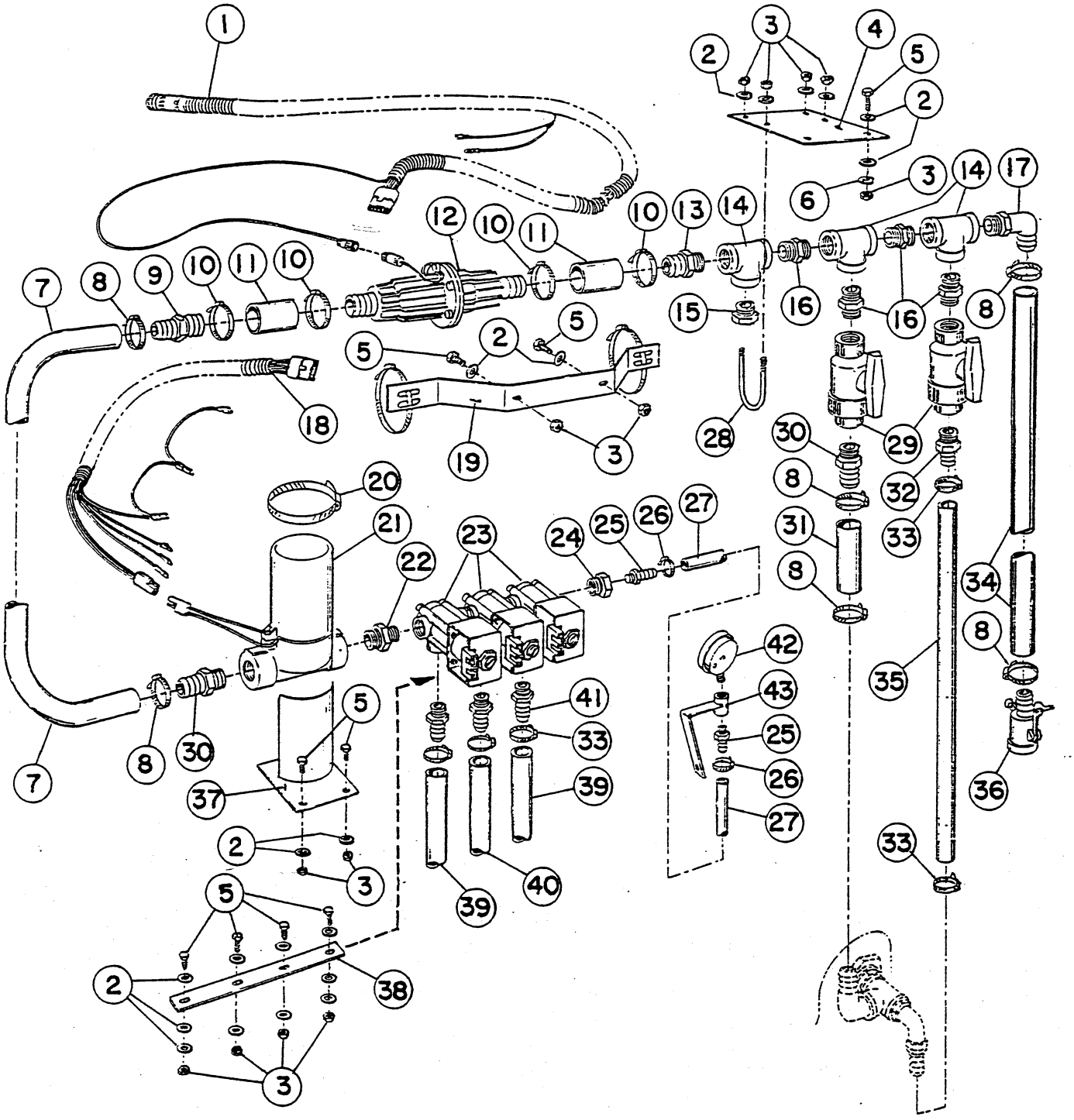

PRO CONTROL SPRAY SYSTEM (3000)

PRO CONTROL SPRAY SYSTEM (3000)

REF	PART NO.	DESCRIPTION	QTY
1	92-3688	Console Control Cable (18 ft.)	1
2	24-10-BD	Flatwasher, 5/16	18
3	22-12-AJD	Hex Nut, 5/16 NC	14
4	92-3675	Manifold Mtg. Plate	1
5	20-26-AGD	HHCS, 5/16 NC x 1"	10
6	23-10-GD	Lock Washer, 5/16	2
7	92-3677	Connector Hose, 1" x 30"	1
8	21146	Hose Clamp	6
9	92-3638	Adaptor, 1" HB x 1-1/4" HB	1
10	41327	Hose Clamp	4
11	41320	Adaptor Hose, 1-1/4" x 3"	2
12	41482	Flow Meter	1
13	41308	Hose Barb, 1" MPT x 1-1/4" HB	1
14	41305	Tee, 1" NPT	3
15	41315	Hex Plug, 1" MPT	1
16	41304	Close Nipple, 1" NPT	4
17	41140	90° Elbow, 1" MPT x 1" HB	1
18	92-3689	Flow Control Cable (3 ft.)	1
19	41483	Flow Meter Mtg. Brkt.	1
20	92-0054	Hose Clamp	1
21	41480	Motorized Control Valve	1
22	41309	Reducing Nipple, 1" MPT x 3/4 MPT	1
23	92-0355	Electric Solenoid Assy. (100 P.S.I.)	1
	92-0356	Single Solenoid	AR
	92-0357	Seal Kit for 92-0356 Valve	AR
24	41310	Reducer Bushing, 3/4 MPT x 1/4 FPT	1
25	21121	Hose Barb, 1/4 MPT x 3/8 HB	2
26	96609	Hose Clamp	2
27	42276	Pressure Gauge Hose, 3/8 ID x 36"	1
28	92-3723	U-Bolt, 5/16	2
29	40020	Ball Valve, 1" NPT	2
30	92-0012	Hose Barb, 1" MPT x 1" HB	2
31	92-3702	Overflow Hose, 1" x 5"	1
32	92-0236	Hose Barb, 1" MPT x 3/4 HB	1
33	92-0045	Hose Clamp	5
34	92-3707	Supply Hose, 1" x 100"	1
35	92-3721	Agitator Hose, 3/4 x 28"	1
36	40480	Quick Coupler x 1" HB	1
37	41732	Control Valve Bracket Assy	1
38	41325	Solenoid Valve Strap	1
39	41340	Boom Hose, Left & Right	2
40	42274	Boom Hose, Center	1
41	41313	Hose Barb, 1/2 MPT x 3/4 HB	3
42	40485	Pressure Gauge	1
43	42277	Gauge Brkt Assy	1

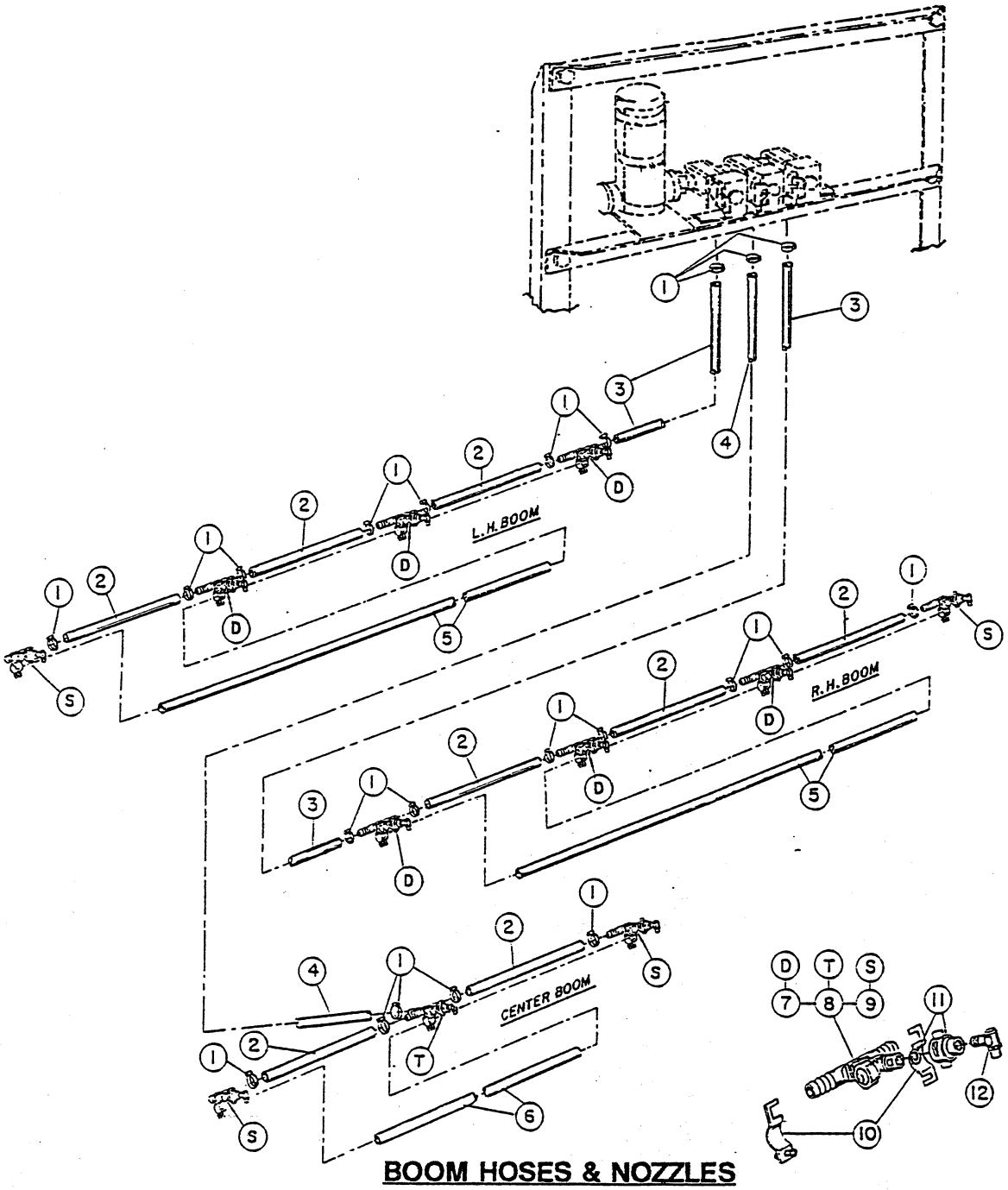

BOOM HOSES & NOZZLES

REF	PART NO.	DESCRIPTION	QTY
1	92-0045	Hose Clamp, 3/4 Hose	22
2	40506	Jumper Hose, 3/4 x 19"	8
3	41340	Boom Hose (Right & Left) 3/4 x 50"	2
4	42274	Boom Hose (Center) 3/4 x 36"	1
5	42282	Extension Boom Pipe Assy	2
6	40493	Center Boom Pipe	1
7	41001	Nozzle Body & Check Valve (Double Barb)	6
8	41002	Nozzle Body & Check Valve (Triple Barb)	1
9	41000	Nozzle Body & Check Valve (Single Barb)	4
	41003	Diaphragm (f/w 41000, 41001 & 41002)	AR
10	40999	Clamp Assy	11
11	40997	Adaptor Cap & Seat Gasket Assy	11
	40998	Seat Gasket (f/w 40997)	AR
12	40444	RA-10 Raindrop Nozzle (Std.)	11
	40223	RA-15 Raindrop Nozzle (Optional)	11
	41088	RA-6 Raindrop Nozzle (Optional)	11
	42828	RA-8 Raindrop Nozzle (Optional)	11

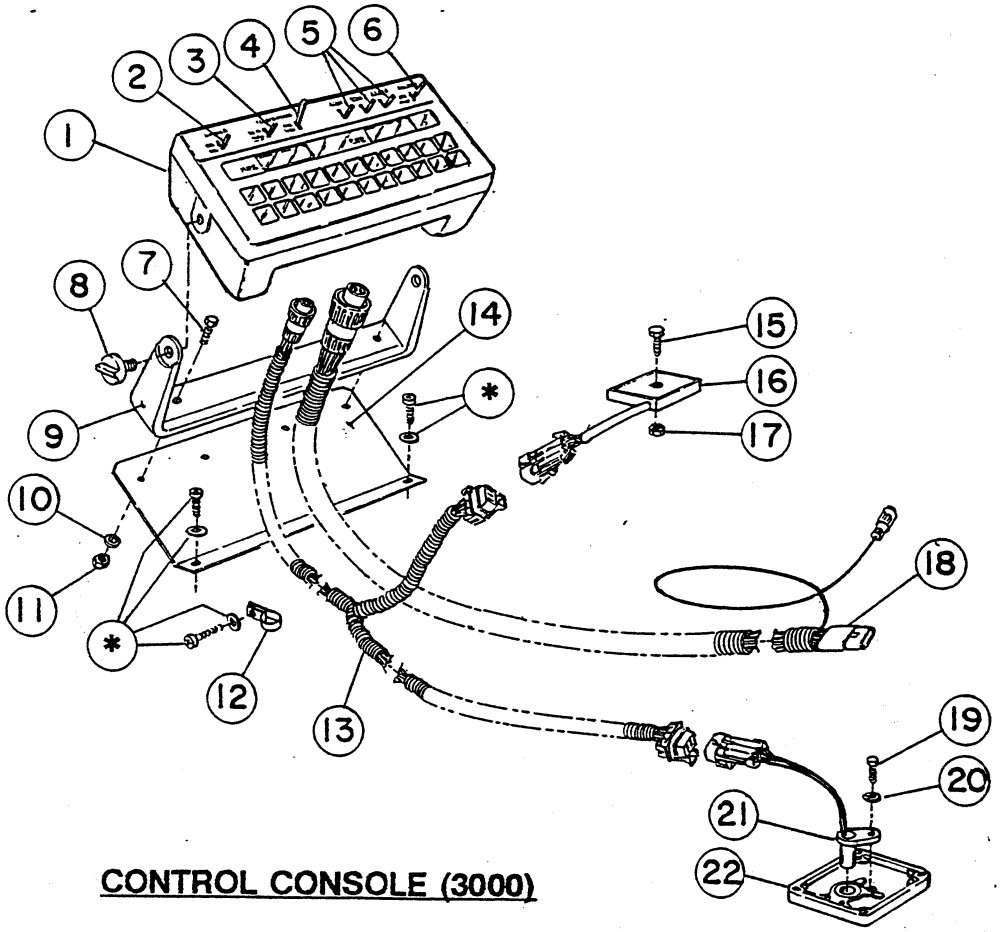

CONTROL CONSOLE (3000)

REF	PART NO.	DESCRIPTION	QTY
1	41472	Control Console	1
	41344	Console Protective Cover	1
2	42722	POWER Switch	1
3	42723	Rate 1/Rate 2 Manual Switch	1
4	42724	MAN AJD Switch	1
5	42558	BOOM Switch	3
6	42725	MASTER Switch	1
	42715	Fuse Holder	1
7	20-5-AGD	HHCS, 1/4 NC x 1"	2
8	41473	Mounting Knob	2
9	41474	Mounting Bracket	1
10	23-9-GD	Lock Washer, 1/4	2
11	22-11-AJD	Hex Nut, 1/4 NC	2
12	41230	Cable Clamp	2
13	92-2661	Wiring Harness - Speed Sensor	1
14	92-3679	Control Console Bracket	1
15	21-83-AMD	Pan Hd. Mach. Screw, #8 NC x 1-1/2"	1
16	92-2612	Frequency Divider	1
17	22-8-AJD	Hex Nut, #8 NC	1
18	92-3688	Control Console Cable	1
19	48-7610	Screw, M6 - 1.0 x 12	1
20	48-8020	Lock Washer	1
21	85-4350	Speed Sensor	1
22	92-3736	Sensor Cover Assy	1
	92-0810	Cover	1
	92-3735	Oil Seal	AR

* Indicates fasteners included with the Vehicle.

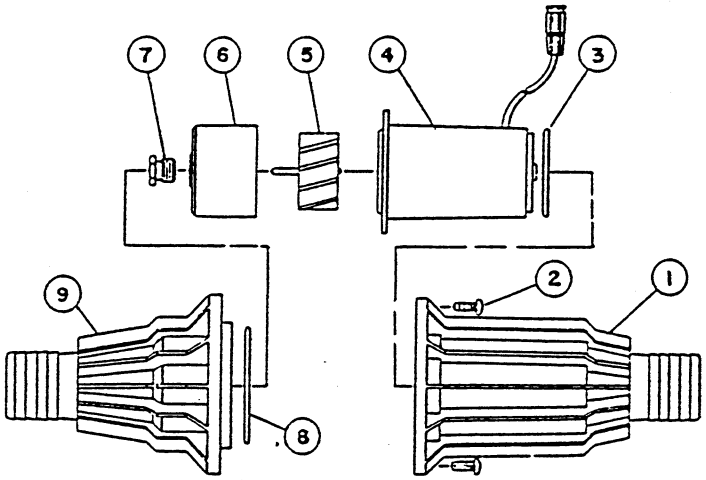

FLOW METER

REF	PART NO.	DESCRIPTION	QTY
1	42475	Sensor Housing	1
2	42476	#10-32 x 3/4 Screw (Stnl. Steel)	6
3	42468	O-Ring (Viton)	1
4	42477	Transducer Assy.	1
5	42478	Turbine	
6	42479	Turbine Hub/Bearing Assy	1
7	42480	Turbine Stud w/Bearing	1
8	42469	O-Ring (Viton)	1
9	42481	Hub Housing w/Inserts	1
10	41483	Mounting Bracket (Not Shown)	1

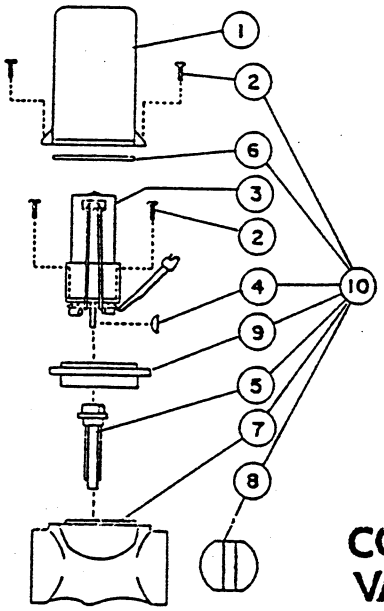

CONTROL VALVE

REF	PART NO.	DESCRIPTION	QTY
1	42318	Valve Cover	1
2	42482	#6-20 x 3/4 Thread Forming Screw	6
3	42483	Motor Assy	1
4	42484	Woodruff Key	1
5	42485	Coupler Shaft	1
6	42470	Seal (Tetraseal)	1
7		Valve Body	NS
8	42486	Butterfly	1
9	42487	Isolation Flange Assy	1
10	42488	Valve, Iso-Body Kit	AR

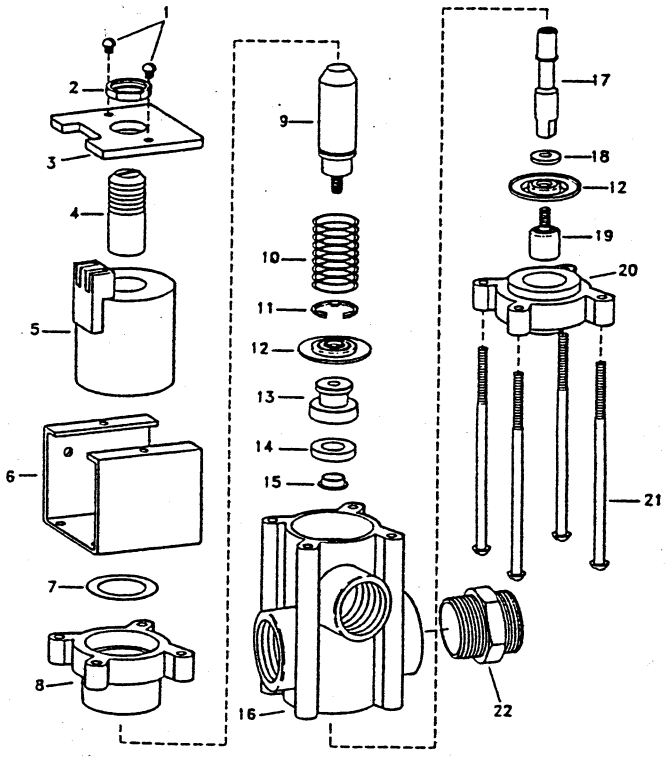

SOLENOID VALVE

REF	PART NO.	DESCRIPTION	QTY
1	42126	Screw - Stainless Steel	2
2	92-0358	Jam Nut - Electroless Nickel Plated	1
3	92-0359	Coil Cover - Steel Epoxy Painted	1
4	92-0360	Armature Stop - Steel Electroless Nickel Plated	1
5	92-0361	Coil Ass'y - Nylon Encapsulated (black)	1
6	92-0362	Strap - Steel, Epoxy Painted	1
7	92-0363	Washer - Stainless Steel	1
8	92-0364	Upper Diaphragm Housing - Nylon, Glass Filled	1
9	92-0365	Armature - Steel, Electroless Nickel Plated	1
10	***	Spring - Type 302 Stainless Steel	1
11	92-0366	Retaining Ring - Steel, Electroless Nickel Plated	1
12	***	Diaphragm - Viton (optional)	2
13	92-3681	Seal Washer Retainer - Stainless Steel	1
14	***	Seal Washer - Viton (optional)	1
15	42136	Spacer - Stainless Steel	1
16	42137	Body - Polypropylene (black)	1
17	92-3682	Stem - Stainless Steel	1
18	42134	Washer - Stainless Steel	1
19	92-0367	Lower Diaphragm Piston - Stainless Steel	1
20	92-0368	Lower Diaphragm Housing - Glass Filled Nylon	1
21	42143	Screw - Stainless Steel	4
22	42884	Connecting Nipple - Nylon (black)	AR

*** Indicates parts included in Viton Seal Kit.
Order Part No. 92-0357.