Form No. 3416-128 Rev F

TORO®

Count on it.

Parts Catalog

Groundsmaster® 4010

Rotary Mower

Model No. 30636—Serial No. 401170001 and Up

Register at www.Toro.com.
Original Instructions (EN)

CE

3416-128 F

Ordering Replacement Parts

To order replacement parts, please supply the part number, the quantity, and the description of each part desired.

Understanding Reference Numbers

Each identified part in an illustration has a reference number. The reference number for a part also appears in the parts list, along with other information about the part.

This catalog uses two special reference number formats, one to indicate parts in a service assembly and another to indicate the quantity of a given part in an illustration.

Service Assembly Reference Numbers

Parts in service assemblies have reference numbers in the form a:b. The a represents the reference number of the entire service assembly and the b represents a sequential number unique to each part within the service assembly.

For example, a wheel assembly might be identified by reference number 6, the tire by 6:1, the valve by 6:2, and the wheel by 6:3. When you order the assembly identified by reference number 6, you receive all parts identified by reference numbers 6:1,6:2, and 6:3. However, you may also order any part individually. Reference numbers of this type appear in illustration and in parts lists.

Reference Numbers Indicating Quantity

In an illustration, if a reference number indicates more than one part, the reference number has the form nX y. The n represents the quantity of the part, the X is the multiplication symbol, and the y represents the reference number.

For example, in an illustration, the reference number 2X 37 means that two of the parts identified by reference number 37 are indicated.

Contents

Front Frame and Steering Assembly . . . 6
Planetary Assembly No. 105-4500 . . . 7
LH Brake Assembly No. 100-3070-03 . . . 8
RH Brake Assembly No. 100-3069-03 . . . 9
Battery, Shield and Rear Cover Assembly . . . 10
Wing Lift Arm Assembly . . . 11
Hydraulic Cylinder Assembly No. 107-4303 . . . 13
Impact Arm Assembly . . . 14
Frame, Bumper and Proximity Sensor Assembly . . . 16
Cab Step Assembly . . . 17
Flywheel and Motor Mount Assembly . . . 18
Radiator Assembly . . . 19
Fan Mounting and Hardline Assembly . . . 21
Hydraulic Motor Assembly No. 117-4769 . . . 22
Engine and Controller Assembly . . . 23
Air Conditioner Compressor Assembly . . . 24
Washer Fluid Bottle Assembly . . . 25
Rear Axle and Steering Cylinder Assembly . . . 26
Bevel Pinion Shaft Assembly Rear Axle Assembly No. 110-4750 . . . 28
Differential Assembly Rear Axle Assembly No. 110-4750 . . . 29
Axle Support Assembly Rear Axle Assembly No. 110-4750 . . . 30
Bevel Gear Case Assembly Rear Axle Assembly No. 110-4750 . . . 31
Bevel Gear Shaft Assembly Rear Axle Assembly No. 110-4750 . . . 32
Axle Case Assembly Rear Axle Assembly No. 110-4750 . . . 33
Axle Assembly Rear Axle Assembly No. 110-4750 . . . 34
Hydraulic Motor Assembly No. 120-8814 . . . 35
Steering Cylinder Assembly No. 121-1534 . . . 36
Hydraulic Fitting Assembly . . . 37
Hose and Tube Routing Assembly . . . 38
Fuel Tank and Air Cleaner Assembly . . . 39
Air Cleaner Assembly No. 99-5410 . . . 40
Hood Assembly . . . 41
Fuel/Water Separator and Shield Assembly . . . 42
Front Deck Installation Assembly . . . 43
Hydraulic Motor Assembly No. 127-3694 . . . 45
Lift Cylinder Assembly No. 120-8802 . . . 46
Front Deck Hydraulic Fitting Assembly . . . 47
Front Deck Hose Routing Assembly . . . 48
Front Deck Idler and Skid Assembly . . . 50
Double Driven Spindle Assembly No. 119-4548 . . . 52
High Driven Spindle Assembly No. 119-4549 . . . 54
Front Deck Caster Arm and Wheel Assembly . . . 55
Driving Spindle Assembly . . . 56
Driving Spindle Assembly No. 119-4547 . . . 57
Cutting Chamber, Cover and Roller Assembly . . . 58
Right Deck Mount Assembly . . . 60
Right Deck Hydraulic Fitting Assembly . . . 61
Right Deck Hose Assembly . . . 62
Right Deck, Idler and Skid Assembly . . . 64
Low Driven Spindle Assembly No. 119-4776 . . . 66
Right Hand and Left Hand Castor Arm and Wheel Assembly . . . 68
Right Deck Discharge Chamber and Cover Assembly . . . 70
LH and RH Deck Driving Spindle Assembly . . . 72
Left Deck Mount Assembly . . . 74

© 2024—The Toro® Company

8111 Lyndale Avenue South
Bloomington, MN 55420

Contact us at www.Toro.com.
Printed in the USA.

All Rights Reserved

Contents (continued)

Left Deck Hydraulic Fitting Assembly . . . 75
Left Deck Hose Assembly . . . 76
Left Deck, Idler and Skid Assembly . . . 77
Left Deck Discharge Chamber and Cover Assembly . . . 79
Traction Pedal and Platform Assembly . . . 80
Brake Pedal Assembly . . . 82
Seat Base and Seat Assembly . . . 84
Cloth Premium Seat Assembly No. 117-9429 . . . 86
Seat Suspension Assembly No. 130-2702 . . . 88
Steering and Controller Assembly . . . 90
Steering Column Assembly No. 132-6230 . . . 92
RH Fender Assembly . . . 93
LH Fender Assembly . . . 94
Acoustic Foam, Panel and Cover Assembly . . . 95
Platform Wire Harness and Fuse Assembly . . . 96
Rear Wire Harness Assembly . . . 97
Battery Cable and Ground Assembly . . . 98
Engine Harness Assembly . . . 99
Piston Pump and Gear Pump Assembly . . . 100
4-Section Gear Pump Assembly No. 120-8904 . . . 101
Hydraulic Pump Assembly No. 132-6100 . . . 102
Combination Manifold Assembly . . . 104
Combination Manifold Assembly No. 127-3650 . . . 105
Manifold Block Assembly . . . 107
Left PTO Manifold Assembly No. 131-1249 . . . 109
Rear Traction Manifold Assembly No. 121-1530 . . . 110
Center and Right PTO Manifold Assembly No. 131-1248 . . . 111
Flow Divider Manifold Assembly No. 121-1550 . . . 112
Drive Motor, Steer Valve and Filter Head Assembly . . . 113
Hydraulic Motor Assembly No. 120-8812 . . . 114
Steering Valve Assembly No. 132-6256 . . . 115
Lift, Steer and Fan Hydraulic Assembly . . . 116
Traction Hydraulic Assembly . . . 118
Hydraulic Reservoir Assembly . . . 120
Oil Cooler Hydraulic Assembly . . . 121
Armrest Control Panel Assembly . . . 122
Cab, Tool Box and Flooring Assembly . . . 124
Frame, Mount and Seal Assembly . . . 126
Cab Headliner Assembly . . . 128
Air Conditioning Duct Assembly No. 132-3468 . . . 130
Fan Panel Assembly No. 132-3488 . . . 132
Window, Door and Striker Assembly . . . 134
RH Door Assembly . . . 136
LH Door Assembly . . . 137
Engine Hose Routing Assembly . . . 138
Pre-Filter Screen Assembly . . . 140
Interior Foam Assembly . . . 142
Roof and Headliner Assembly . . . 144
Headliner Wire Harness and Control Assembly . . . 146
Mixing Box Mounting Bracket and Water Tray Assembly . . . 148
Blower Fan and Evaporator Core Assembly . . . 150
Heat/Air Conditioner Housing Assembly . . . 152
Air Diverter and Expansion Valve Assembly . . . 154
Air Diverter Assembly No. 121-8369 . . . 156

Contents (continued)

Cylinder Block Assembly . . . 158
Gear Housing Assembly . . . 159
Cylinder Head and Cover Assembly . . . 160
Flywheel Housing and Oil Sump Assembly . . . 162
Diesel Particulate Filter Assembly . . . 164
Suction Manifold Assembly . . . 166
Exhaust Manifold Assembly . . . 167
Camshaft and Driving Gear Assembly . . . 168
Turbine Assembly . . . 169
Crankshaft and Piston Assembly . . . 170
Lubrication and Oil System Assembly . . . 171
Lubrication Oil Line Assembly . . . 172
Cooling Water System Assembly . . . 173
Fuel System Assembly . . . 174
Fuel Injection Valve Assembly . . . 175
Fuel Line Assembly . . . 176
Starting Motor Assembly . . . 177
Generator Assembly . . . 178
Electric Parts Assembly . . . 179
Gasket Set . . . 180
Attachments and Accessories . . . 182

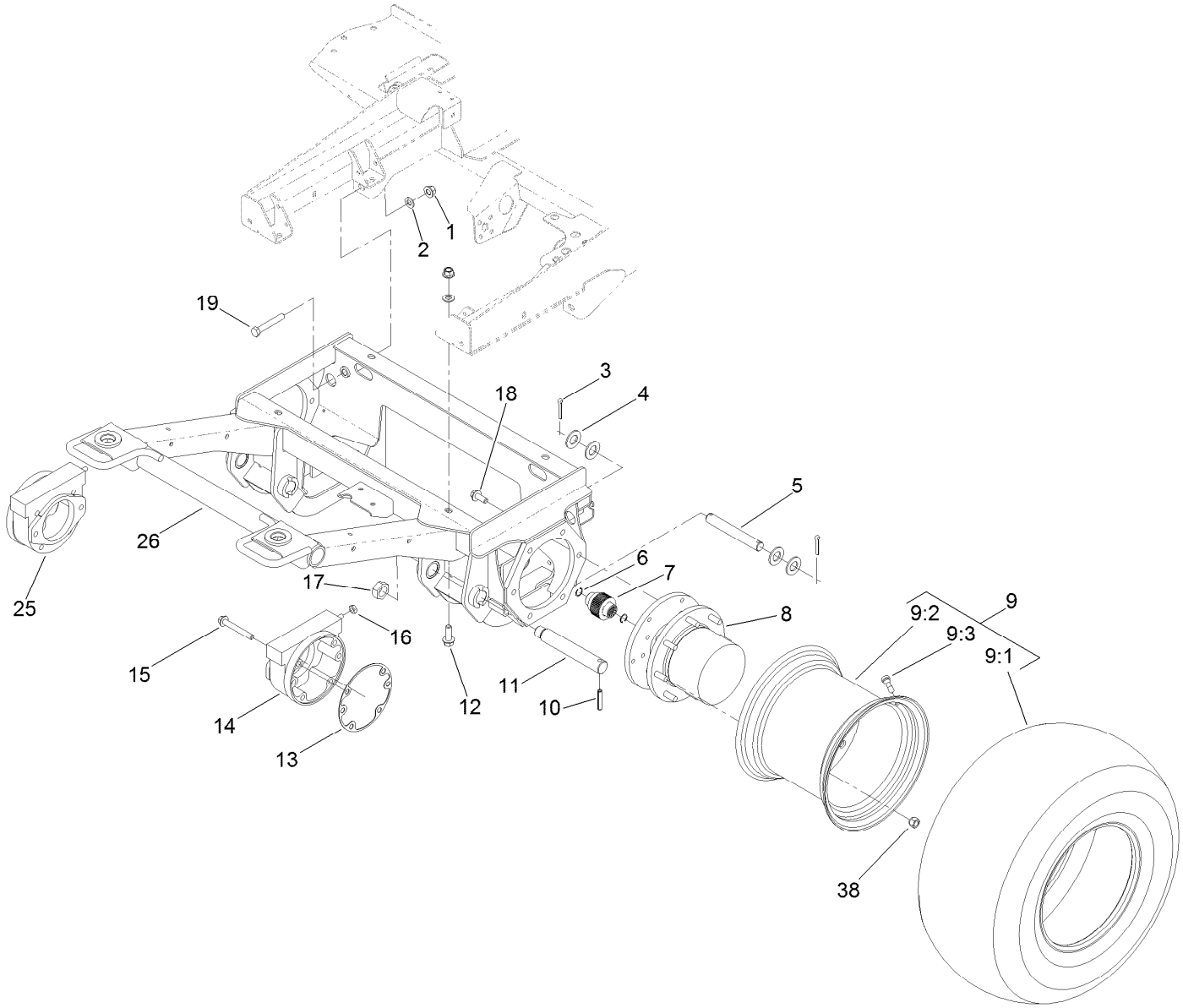

Front Frame and Steering Assembly

Ref.	Part Number	Qty.	Description
1	99-5107	6	Nut-Lock
2	3256-26	6	Washer-Flat
3	3272-30	4	Pin-Cotter
4	3256-29	8	Washer-Flat
5	110-6006	2	Pin-Clevis
6	93-7972	4	Ring-Retaining, Internal
7	100-3046	2	Shaft-Brake, Splined
8	105-4500	2	Planetary ASM
9		2	Wheel And Tire ASM ●
9:1	119-8313	1	Tire
9:2	136-4391	1	Rim
9:3	232-27	1	Stem-Valve
10	32121-110	2	Pin-Roll, Slotted
11	100-3017	2	*obs Pin-Lift Arm
12	100-6116	4	Screw-HHF
13	93-7984	2	Gasket
14	100-3070-03	1	Brake ASM
15	33106-090	8	Screw-HHF
16	3218-4	2	Nut-Jam
17	3296-49	2	Nut-Lock, NI
18	33106-030	12	Screw-HHF
19	325-13	2	Screw-HH
25	100-3069-03	1	Brake ASM
26	132-6250-03	1	Frame-Front
38	242-50	16	Nut-Lug

● Not serviced separately

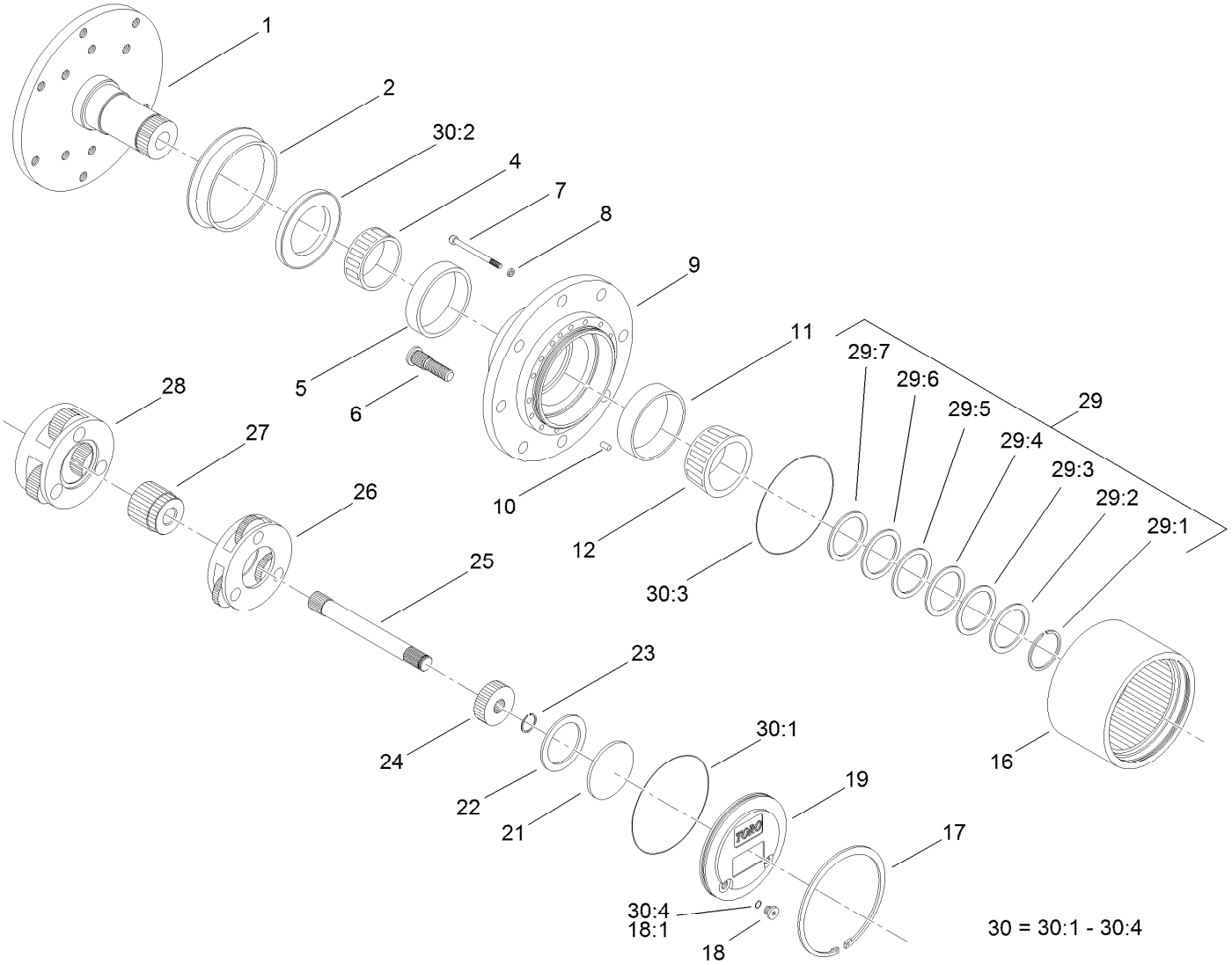

Planetary Assembly No. 105-4500

Ref.	Part Number	Qty.	Description
1		1	Spindle ●
2	105-8122	1	Seal-Boot
4	105-8120	1	Bearing-Cone
5	105-8119	1	Bearing-Cup
6	105-8124	8	Stud-Wheel
7	105-8125	16	Bolt-Head, Socket
8	3253-18	16	Washer-Lock
9		1	Housing ●
10	105-8121	1	Pin-Dowel
11	105-8117	1	Bearing-Cup
12	105-8118	1	Bearing-Cone
16	105-8113	1	Gear-Ring
17	105-8132	1	Ring-Retaining
18	353-990	2	Plug ASM
18:1	237-78	1	O-Ring
19	105-8138	1	Cap-End
21	105-8133	1	Plug-Thrust
22	105-8123	1	Washer-Thrust
23	105-8131	1	Ring-Retaining

Ref.	Part Number	Qty.	Description
24	105-8114	1	Gear-Primary
25	105-8115	1	Shaft-Drive
26	105-8129	1	Carrier-Primary
27	105-8139	1	Gear-Secondary
28	105-8130	1	Carrier-Secondary
29	105-8136	1	Shim Kit
29:1		1	Ring-Snap ●
29:2		1	Shim-Bearing, 2.9Mm ●
29:3		1	Shim-Bearing, 2.8Mm ●
29:4		1	Shim-Bearing, 2.7Mm ●
29:5		1	Shim-Bearing, 2.6Mm ●
29:6		1	Shim-Bearing, 2.5Mm ●
29:7		1	Shim-Bearing, 2.4Mm ●
30	105-8137	1	Seal Kit
30:1		1	O Ring-Flange Cap ●
30:2		1	Seal-Oil ●
30:3		2	O Ring-End Cap ●
30:4	237-78	2	O-Ring

● Not serviced separately

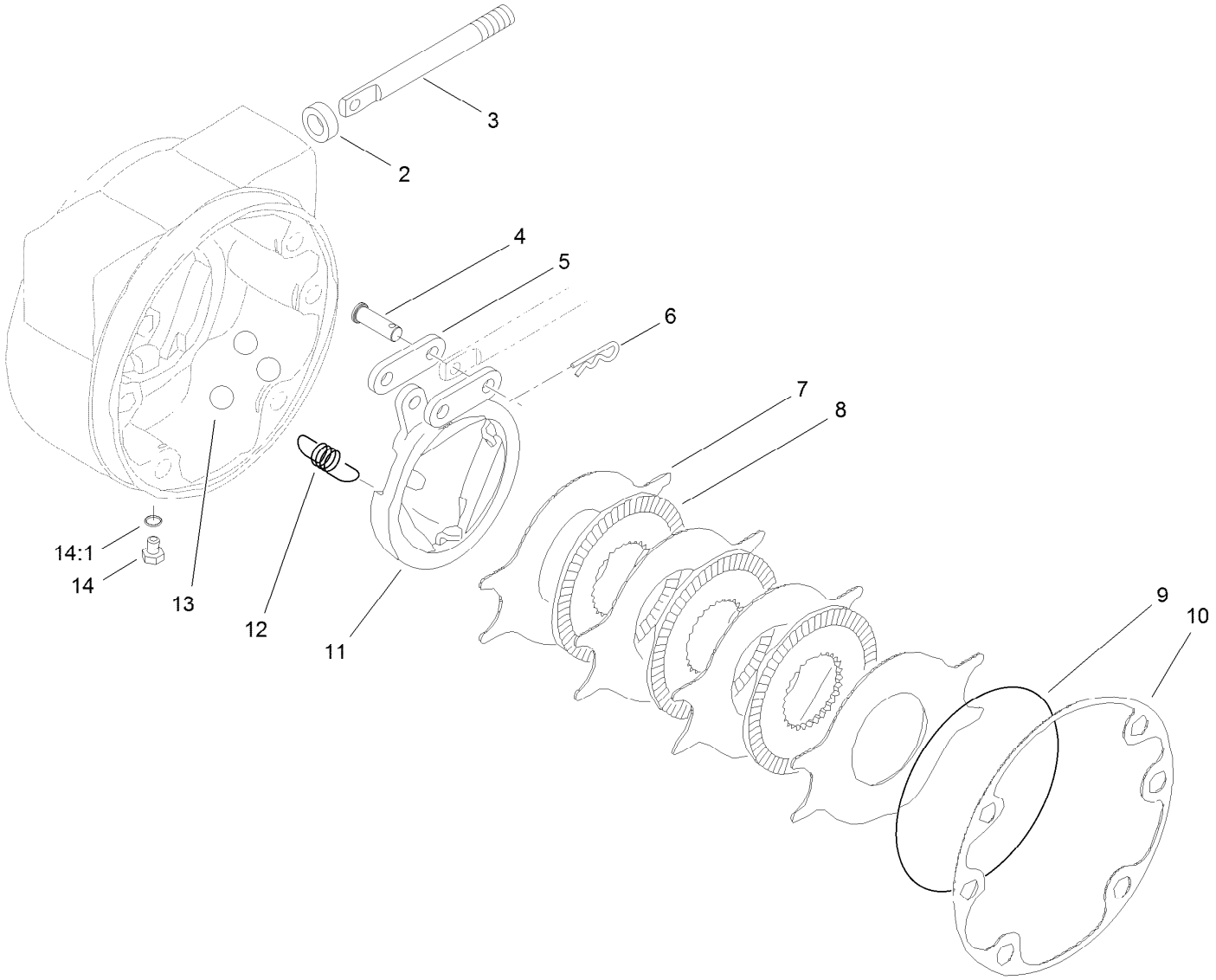

LH Brake Assembly No. 100-3070-03

Ref.	*Part Number*	*Qty.*	*Description*
2	93-7977	1	Seal
3	93-7978	1	Rod-Pull
4	93-7983	2	Pin-Clevis
5	93-7980	2	Link
6	93-7979	2	Pin-Hitch
7	93-7986	4	Disc-Stationary
8	104-4278	3	Disc-Rotating
9	93-7976	1	Ring-Retaining
10	93-7984	1	Gasket
11	104-4279	1	Actuator-Rotating
12	93-7987	3	Spring-Extension
13	93-7985	3	Ball
14	353-990	2	Plug ASM
14:1	237-78	1	O-Ring

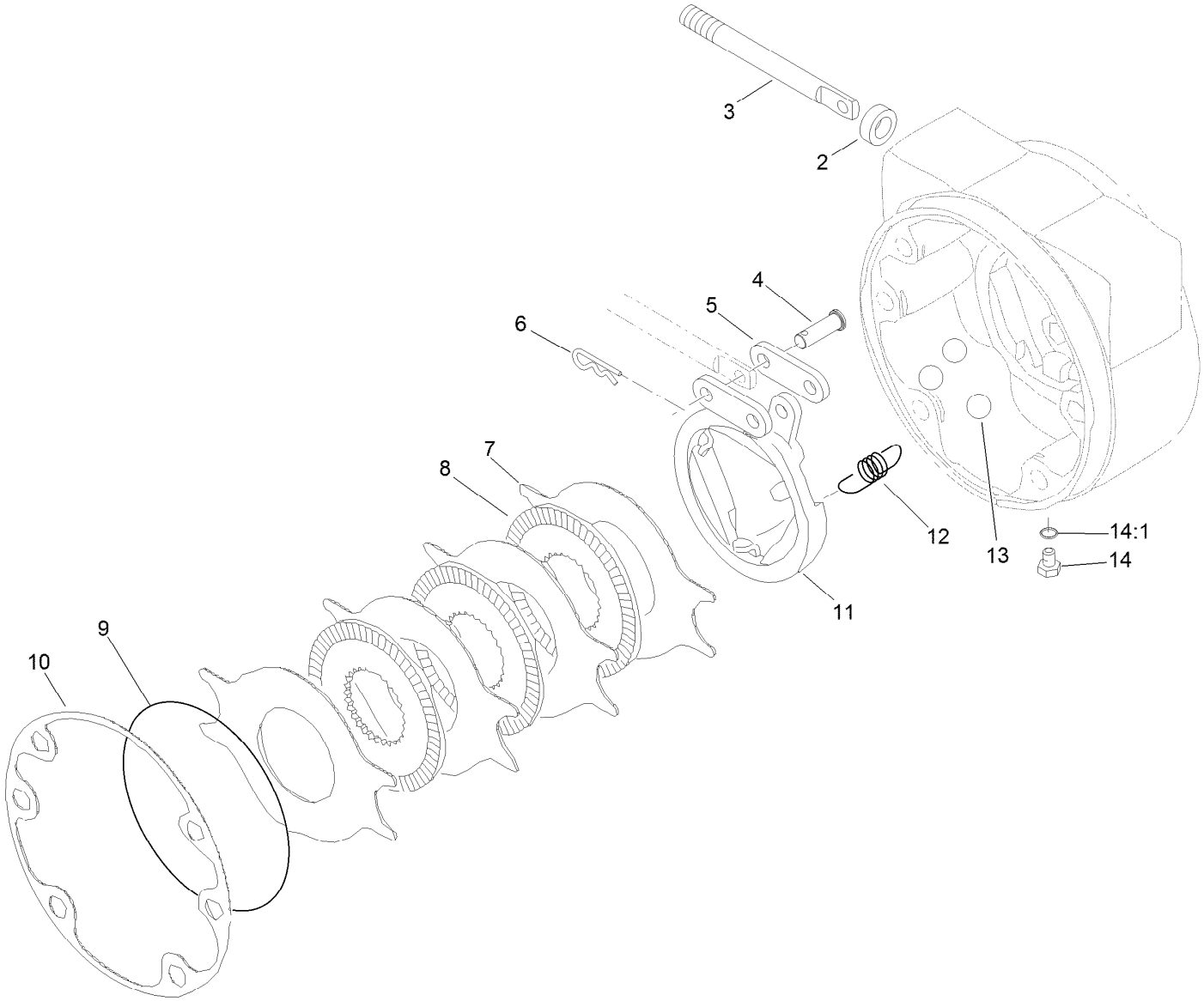

RH Brake Assembly No. 100-3069-03

Ref.	*Part Number*	*Qty.*	*Description*
2	93-7977	1	Seal
3	93-7978	1	Rod-Pull
4	93-7983	2	Pin-Clevis
5	93-7980	2	Link
6	93-7979	2	Pin-Hitch
7	93-7986	4	Disc-Stationary
8	104-4278	3	Disc-Rotating
9	93-7976	1	Ring-Retaining
10	93-7984	1	Gasket
11	104-4280	1	Actuator-Rotating
12	93-7987	3	Spring-Extension
13	93-7985	3	Ball
14	353-990	2	Plug ASM
14:1	237-78	1	O-Ring

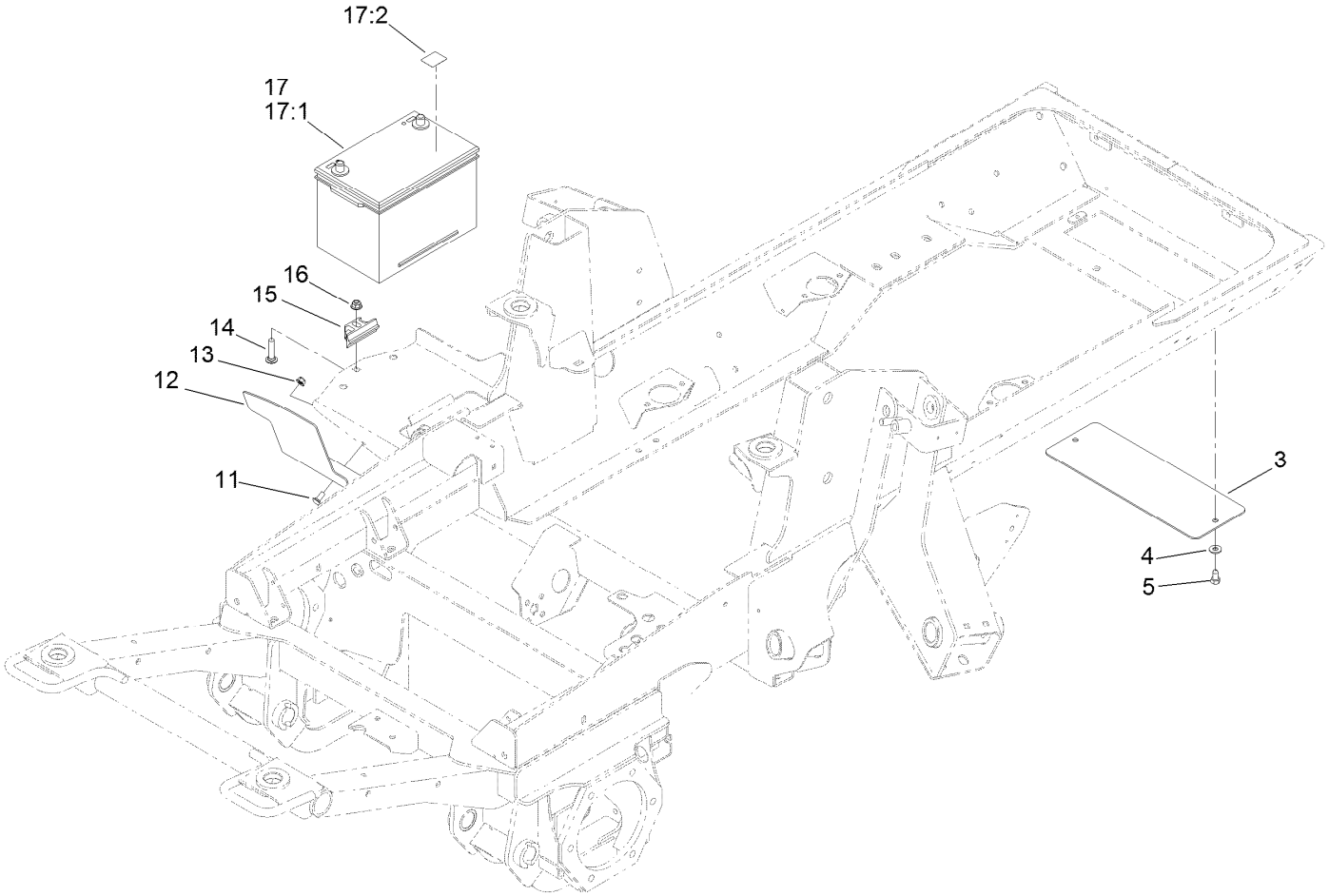

Battery, Shield and Rear Cover Assembly

Ref.	*Part Number*	*Qty.*	*Description*
3	131-1246-03	1	Plate-Cover
4	3256-3	2	Washer-Flat
5	32104-6	2	Screw-HH, TAP
11	3230-23	2	Bolt-CARR
12	121-1512-03	1	Shield-Battery
13	104-8300	2	Nut-HF, NI
14	3231-5	1	Screw-CARR
15	138-6335	1	Retainer-Battery
16	104-8301	1	Nut-HF, NI
17	139-1005	1	Battery Kit
17:1	127-7507	1	Battery
17:2	139-1006	1	Decal

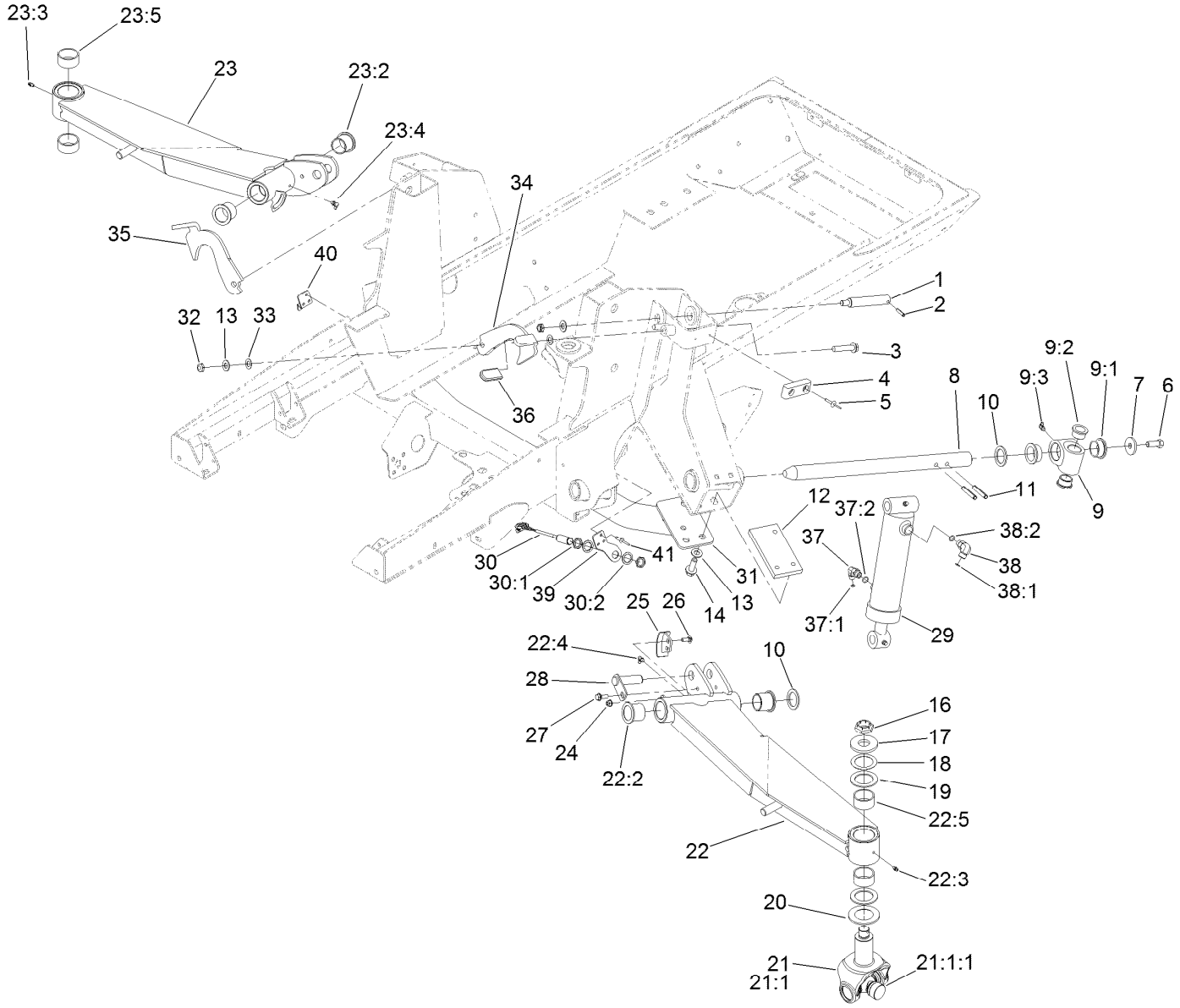

Wing Lift Arm Assembly

Ref.	Part Number	Qty.	Description
1	104-3537	2	Pin-Cylinder
2	32121-9	2	Pin-Roll, Slotted
3	3234-46	2	Screw-HHF
4	86-5350	2	Bumper-Rubber
5	3269-11	4	Rivet-Pop
6	325-5	2	Screw-HH
7	106-2008	2	Washer-Thrust
8	121-3882	2	Shaft-Pivot, Lift Arm
9	115-5468	2	Pivot Hub ASM
9:1	115-5469	2	Bushing-Flange
9:2	114-5680	2	Bushing-Flange
9:3	302-60	1	Fitting-Grease
10	256-304	4	Washer-Thrust
11	117-5479	4	Pin-Spring
12	120-8859-03	2	Block-Tapped
13	3256-26	10	Washer-Flat
14	100-6116	6	Screw-HHF
16	116-1399	2	Locknut

Ref.	Part Number	Qty.	Description
17	104-0719	2	Washer-Hardened
18	114-5641	2	Washer-Thrust
19	104-0721	4	Washer-Thrust
20	104-0720	2	Spacer
21	114-5640-03	2	Joint Yoke ASM
21:1		1	Yoke-Joint ●
21:1:1	104-4299	1	Cross And Bearing Kit
22	132-6210	1	LH Lift Arm ASM
22:2	69-6470	2	Bushing-Caster
22:3	302-5	1	Fitting-Grease
22:4	302-60	1	Fitting-Grease
22:5	114-5596	2	Bushing-Straight
23	132-6217	1	RH Lift Arm ASM
23:2	69-6470	2	Bushing-Caster
23:3	302-5	1	Fitting-Grease
23:4	302-60	1	Fitting-Grease
23:5	114-5596	2	Bushing-Straight
24	104-8300	6	Nut-HF, NI

● Not serviced separately

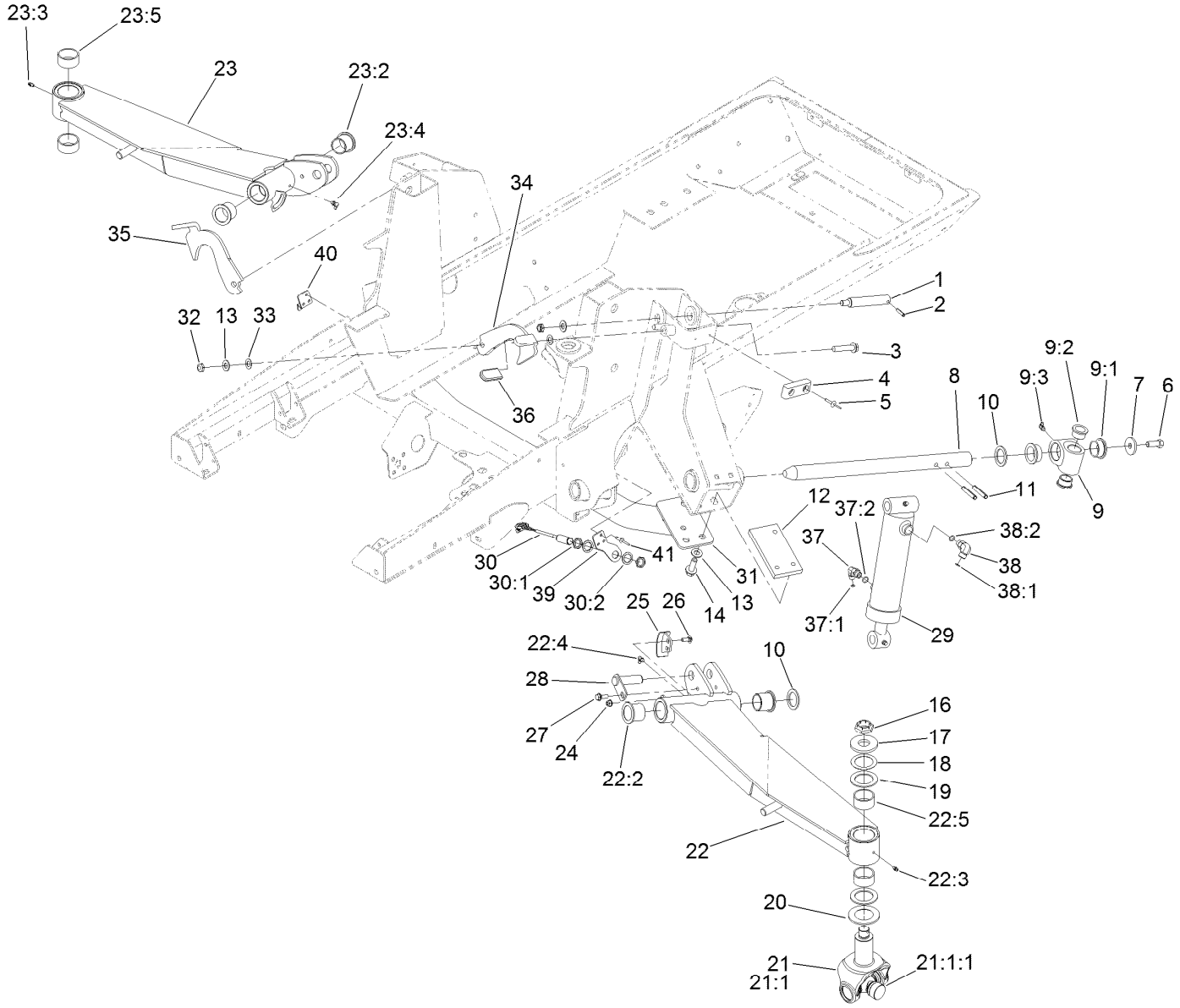

Wing Lift Arm Assembly (continued)

Ref.	Part Number	Qty.	Description
25	132-1429	2	Sensor-Trigger
26	3230-16	4	Screw-CARR
27	27-0410	2	Screw-Shoulder
28	100-5674	2	Pin
29	107-4303	2	HYD Cylinder ASM
30	115-5300	2	Proximity Switch ASM
30:1	117-3207	2	Nut-Hex
30:2	117-3208	2	Washer-Lock, Internal Tooth
31	120-9000-03	1	Crossmember
32	3296-45	4	Nut-Hex
33	104-3577	4	Washer
34	136-4395-03	1	Latch-Deck, LH

Ref.	Part Number	Qty.	Description
35	136-4394-03	1	Latch-Deck, RH
36	48-7081	2	Grip-Plastic
37	340-82	2	Fitting-Elbow, 90 DEG
37:1	237-42	1	O-Ring
37:2	237-21	1	O-Ring
38	340-77	2	Fitting-Elbow, 90 DEG
38:1	237-22	1	O-Ring
38:2	237-42	1	O-Ring
39	132-1421	1	Plate-Pivot, LH
40	132-1422	1	Plate-Pivot, RH
41	3290-412	6	Rivet-Blind

● Not serviced separately

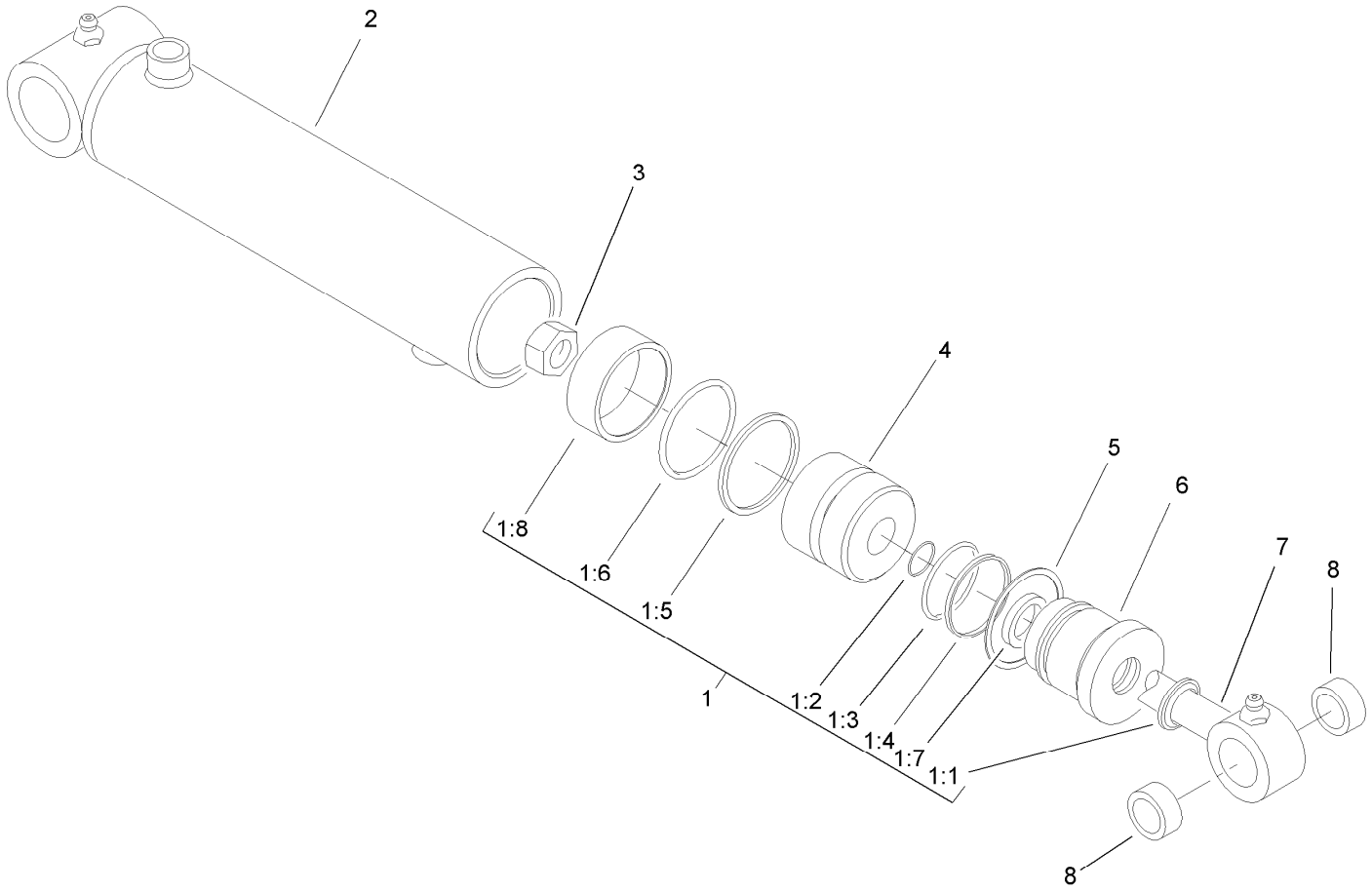

Hydraulic Cylinder Assembly No. 107-4303

Ref.	Part Number	Qty.	Description
1	107-0249	1	Seal Kit
1:1		1	Wiper ●
1:2		1	O-Ring ●
1:3		1	O-Ring ●
1:4		1	Back-Up ●
1:5		1	Seal ●
1:6		1	O-Ring ●
1:7		1	Seal ●
1:8		1	Wear Ring ●
2		1	Barrel ASM ●
3		1	Locknut ●
4		1	Piston ●
5		1	Ring, Retaining ●
6		1	Head ●
7		1	Rod ASM ●
8	104-4281	2	Bushing

● Not serviced separately

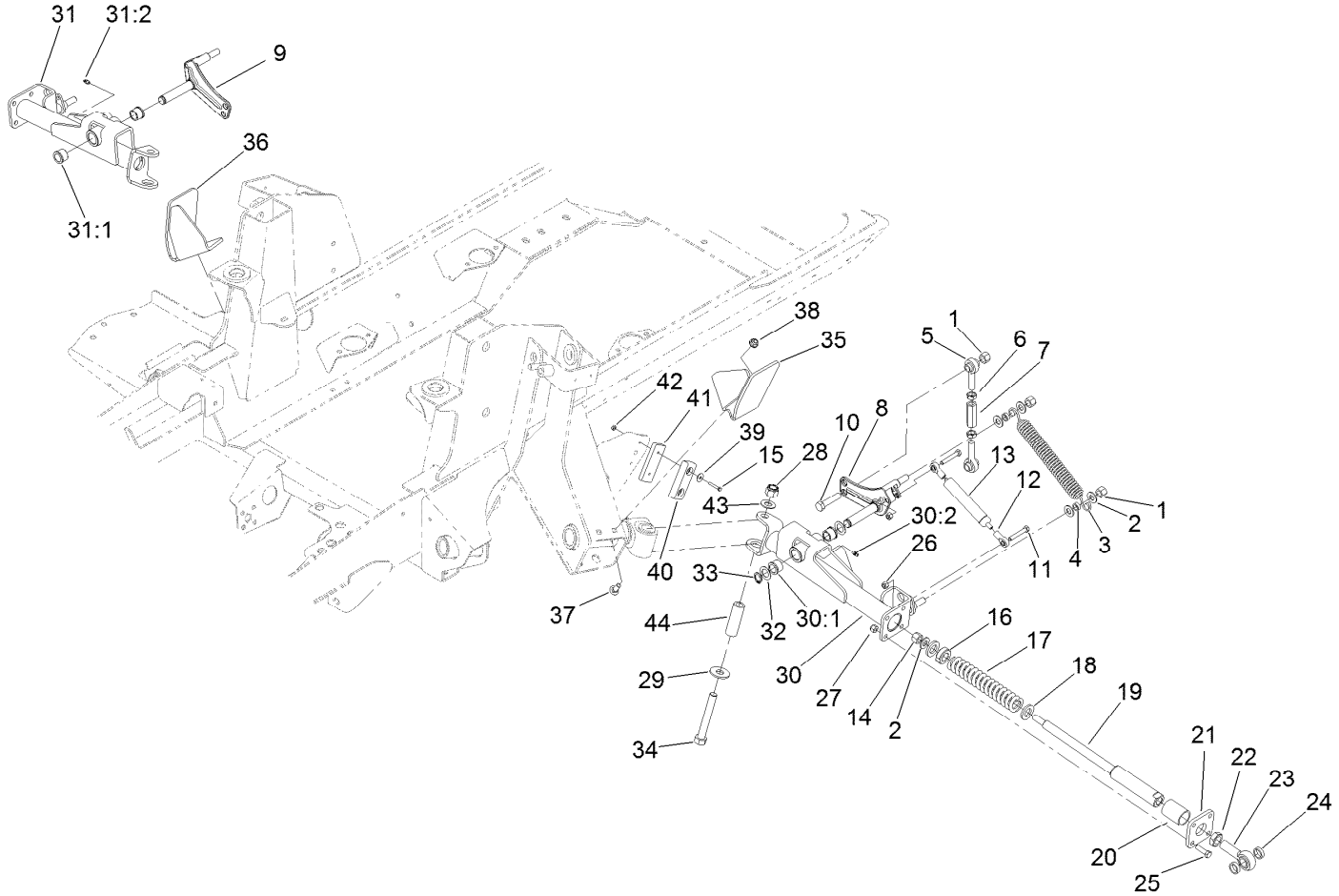

Impact Arm Assembly

Ref.	Part Number	Qty.	Description
1	3296-23	6	Nut-Lock, NI
2	3256-26	10	Washer-Flat
3	104-7520	2	Spring-Damper
4	104-7521	4	Bushing
5	105-2808	4	End-Rod
6	3220-5	4	Nut-Jam
7	105-2809	2	Tube-Link
8	114-2717	1	Crank-Bell, LH
9	114-2716	1	Crank-Bell, RH
10	325-9	2	Screw-HH
11	322-10	4	Screw-HH
12	104-8331	4	End-Rod, Spherical
13	105-3249	2	Damper
14	3296-23	2	Nut-Lock, NI
15	3290-360	4	Screw-HH
16	105-4552	2	Bearing-Plastic
17	100-8138	2	Spring-Compression
18	105-4551	4	Washer-Flat
19	105-4548	2	Shaft-Spring
20	105-4550	2	Bushing-Straight
21	105-2807-03	2	Plate

Ref.	Part Number	Qty.	Description
22	3220-7	2	Nut-Jam
23	105-2806	2	End-Rod
24	105-0756	4	Spacer
25	323-7	8	Screw-HH
26	3296-29	4	Nut-Lock, NI
27	3296-39	8	Nut-Lock, NI
28	3296-53	2	Nut-Lock, NI
29	3256-7	2	Washer-Flat
30	120-8884	1	LH Rear Arm ASM
30:1	256-113	2	Bushing-Flange
30:2	302-5	1	Fitting-Grease
31	120-8883	1	RH Rear Arm ASM
31:1	256-113	2	Bushing-Flange
31:2	302-5	1	Fitting-Grease
32	3-6498	4	Washer-Thrust
33	32120-93	2	Ring-Retaining
34	327-23	2	Screw-HH
35	120-8856-03	1	Bracket-Roller, LH
36	120-8874-03	1	Bracket-Roller, RH
37	3231-2	4	Bolt-CARR
38	104-8301	4	Nut-HF, NI

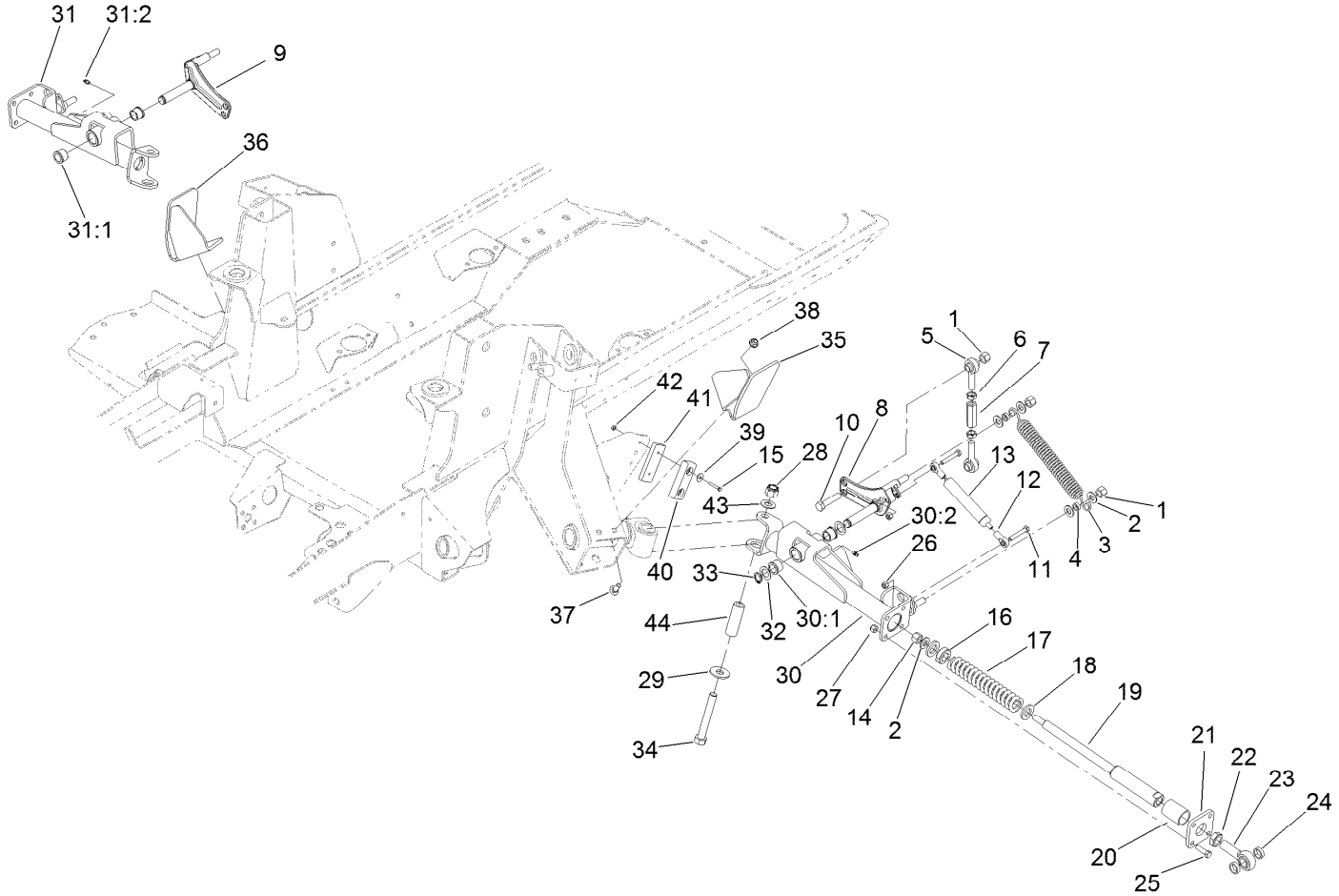

Impact Arm Assembly (continued)

Ref.	Part Number	Qty.	Description
39	3256-61	4	Washer-Flat
40	86-5350	2	Bumper-Rubber
41	119-8308-03	2	Plate
42	3296-2	4	Nut-Lock, NI
43	3256-27	2	Washer-Flat
44	94-6604	2	Tube-Spacer

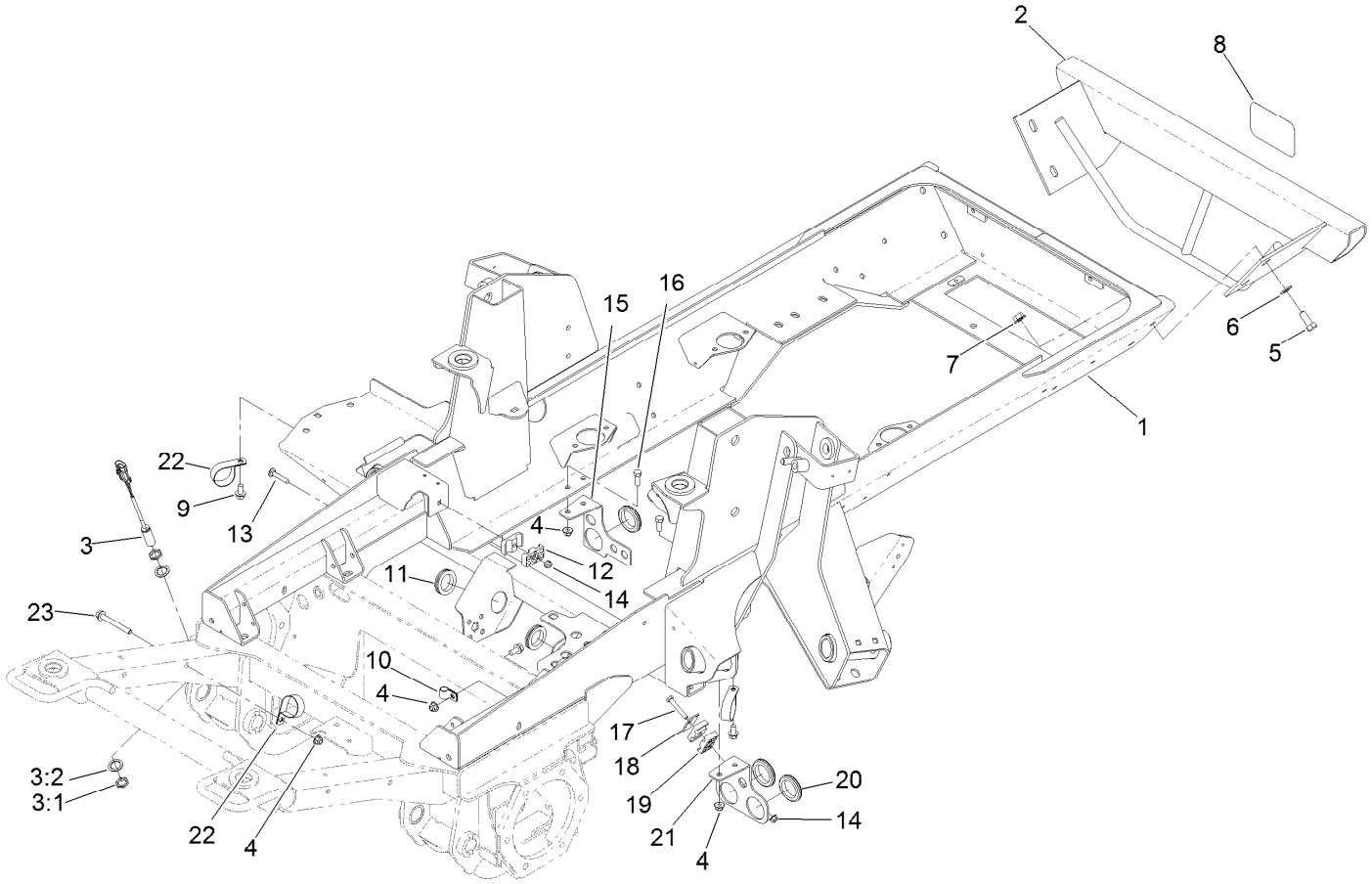

Frame, Bumper and Proximity Sensor Assembly

Ref.	Part Number	Qty.	Description
1	120-4010-03	1	Frame
2	120-8919-03	1	Bumper
3	115-0282	1	Proximity Sensor ASM
3:1	117-3207	2	Nut-Hex
3:2	117-3208	2	Washer-Lock, Internal Tooth
4	104-8301	6	Nut-HF, NI
5	325-5	4	Screw-HH
6	3256-26	4	Washer-Flat
7	32128-23	4	Nut-HF
8	105-8278	1	Decal
9	3234-1	3	Screw-HHF
10	2412-138	1	R-Clamp
11	240-7	2	Grommet-Rubber
12	56-7971	2	Clamp-Tube
13	3230-5	1	Bolt-CARR
14	104-8300	2	Nut-HF, NI
15	121-1508-03	1	Bracket-Bulkhead
16	323-6	4	Screw-HH
17	322-10	1	Screw-HH
18	69-9760	1	Plate-Cover
19	56-7976	2	Clamp-Tube
20	240-2	3	Grommet-Rubber
21	121-1481-03	1	Plate-Mount, Bulkhead (LH)
22	2412-147	3	Clamp-R
23	3234-41	1	Screw-HHF

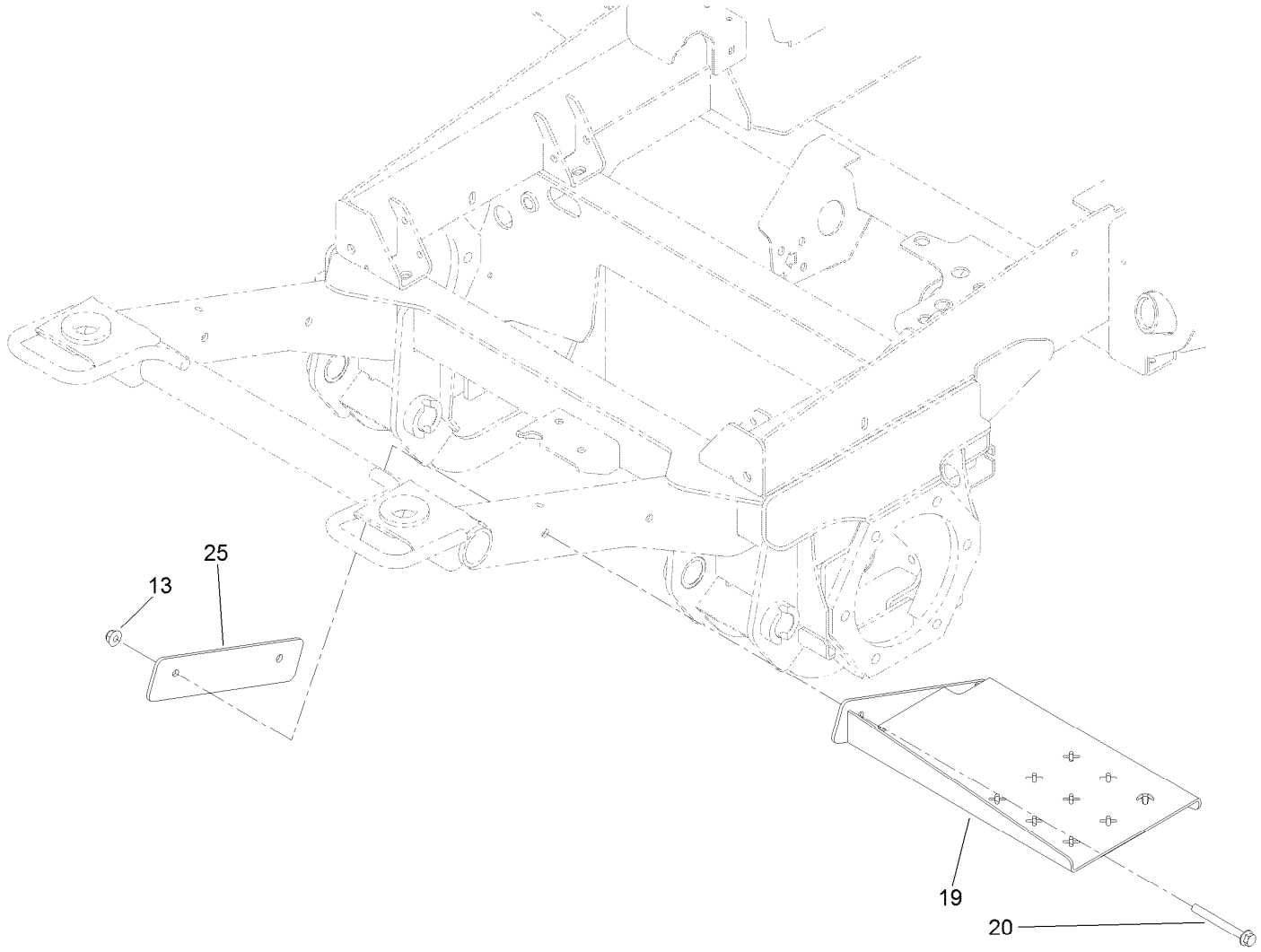

Cab Step Assembly

Ref.	Part Number	Qty.	Description
13	104-8301	2	Nut-HF, NI
19	121-1739-03	1	Step
20	116-4701	2	Screw-HHF
25	120-9022-03	1	Support-Step

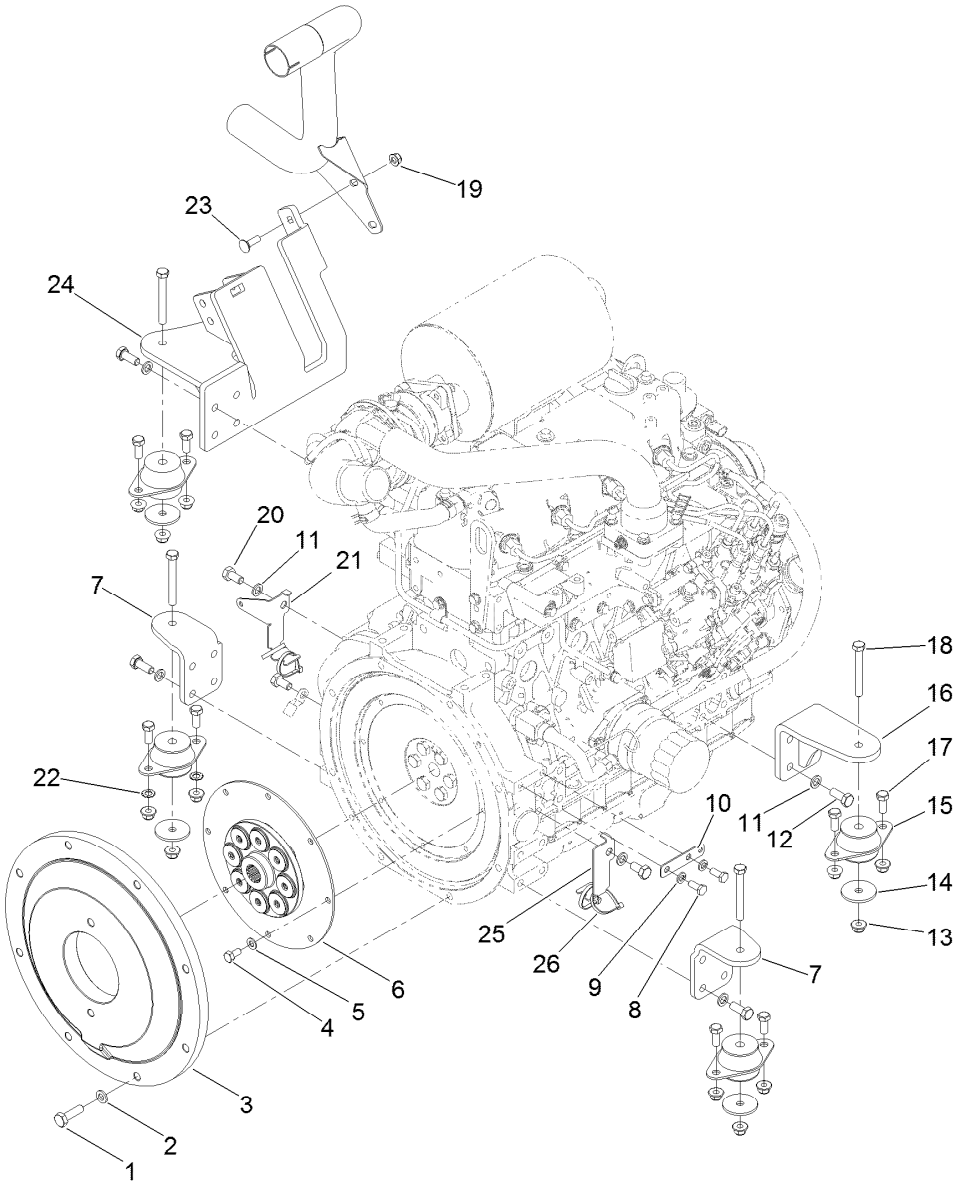

Flywheel and Motor Mount Assembly

Ref.	Part Number	Qty.	Description
1	117-5663	8	Screw-HH
2	107-1413	8	Washer-Hardened
3	132-6120-03	1	Plate-Flywheel
4	99-5132	8	Bolt
5	87-7510	8	Washer-Flat
6	132-6121	1	Coupling-Flywheel
7	120-4066-03	2	Mount-Motor, Front
8	33114-020	2	Screw-HH
9	3253-4	2	Washer-Lock
10	121-5636	1	Tab-Harness
11	48-9590	18	Washer-Lock
12	33115-025	16	Screw-HH
13	104-8301	12	Nut-HF, NI

Ref.	Part Number	Qty.	Description
14	63-7400	4	Washer-Rebound
15	53-9682	4	Mount-Engine
16	120-4068-03	1	Mount-Motor
17	323-5	8	Screw-HH
18	323-14	4	Screw-HH
19	104-8300	2	Nut-HF, NI
20	33115-020	3	Screw-HH
21	127-2774	1	Bracket-Harness, RH
22	3255-9	2	Washer-Lock
23	3230-2	2	Bolt-CARR
24	127-3722-03	1	Mount-Motor
25	127-2773	1	Bracket-Harness, LH
26	3290-378	4	Tie-Cable

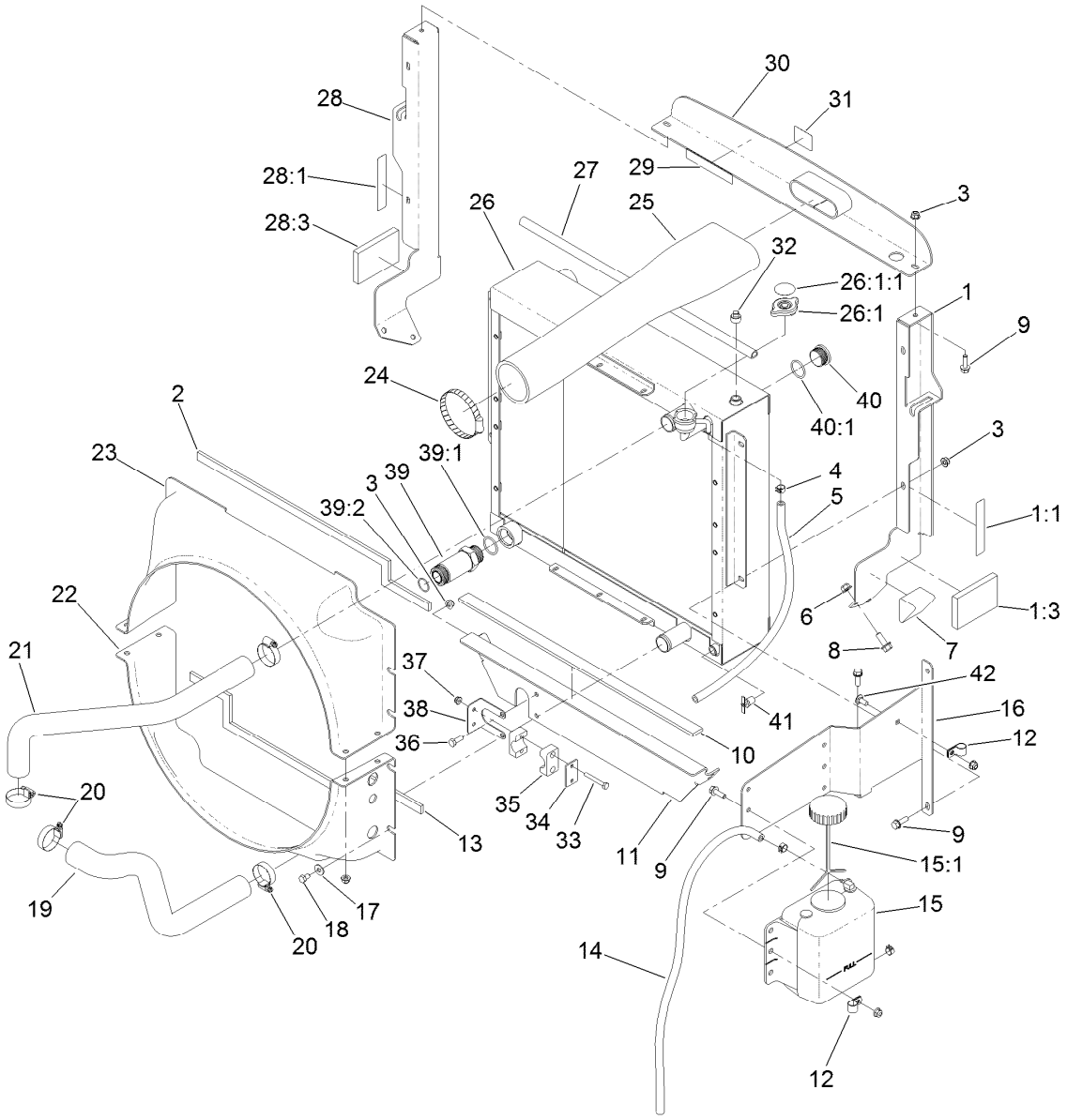

Radiator Assembly

Ref.	Part Number	Qty.	Description
1	121-1479	1	LH Radiator Support ASM
1:1	93-7272	1	Decal-Warning
1:3	100-2196	1	Pad-Foam
2	121-1684	1	Foam-Radiator
3	104-8300	15	Nut-HF, NI
4	92-2379	3	Clamp-Hose
5	110-4112	1	Hose-Fuel
6	104-8301	6	Nut-HF, NI
7	93-5954	2	Plug-Foam
8	3234-11	6	Screw-HHF
9	3234-29	12	Screw-HHF
10	104-2226	1	Strip-Foam
11	120-8968-03	1	Bracket-Hose
12	92-6064	2	Clamp-R
13	121-1685	1	Foam-Radiator, Lower
14	110-9662	1	Hose-Fuel
15	120-5571	1	Coolant Reservoir ASM
15:1	87-7050	1	Cap-Reservoir
16	130-0603-03	1	Bracket-Mount, Bottle
17	3256-3	8	Washer-Flat
18	322-1	8	Screw-HH

Ref.	Part Number	Qty.	Description
19	121-1746	1	Hose-Radiator, Lower
20	2412-111	4	Clamp-Hose, W/Liner
21	121-1747	1	Hose-Radiator, Upper
22	121-1517	1	Shroud-Radiator, Lower
23	121-1515	1	Shroud-Radiator, Upper
24	2412-110	1	Clamp-Band/Screw
25	121-1474	1	Hose-Inlet, Air Cleaner
26	132-6161	1	Radiator/Oil Cooler
26:1	115-7766	1	Cap-Radiator
26:1:1	106-6755	1	Decal-Cap, Radiator
27	114-3828	1	Seal-Bulb
28	121-1478	1	RH Radiator Support ASM
28:1	93-7272	1	Decal-Warning
28:3	100-2196	1	Pad-Foam
29	93-7272	1	Decal-Warning
30	136-4364-03	1	Bracket-Intake
31	117-4765	1	Decal-Starting Fluid
32	281-13	1	Plug-Pipe
33	321-11	2	Screw-HH
34	114-4902	1	Plate-Cover
35	114-4901	1	Clamp

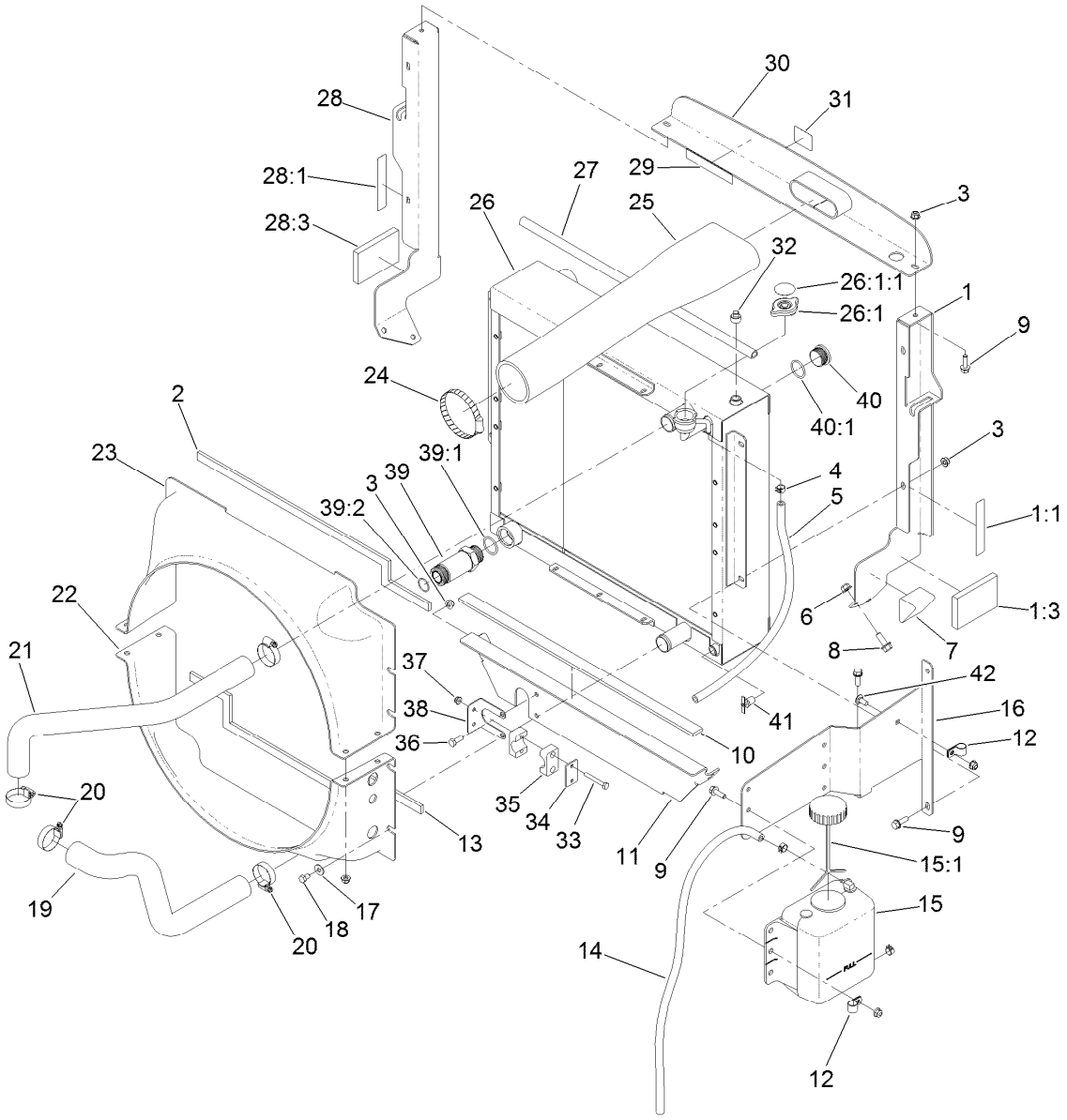

Radiator Assembly (continued)

Ref.	Part Number	Qty.	Description
36	322-4	2	Screw-HH
37	104-7201	2	Nut-HF, NI
38	120-8984	1	Bracket-Clamp
39	100-5565	1	Fitting-STR
39:1	237-146	1	O-Ring

Ref.	Part Number	Qty.	Description
39:2	340-65	1	O-Ring
40	106-2030	1	Plug-Hex, Hollow
40:1	237-146	1	O-Ring
41	304-46	1	Draincock
42	3230-23	1	Bolt-CARR

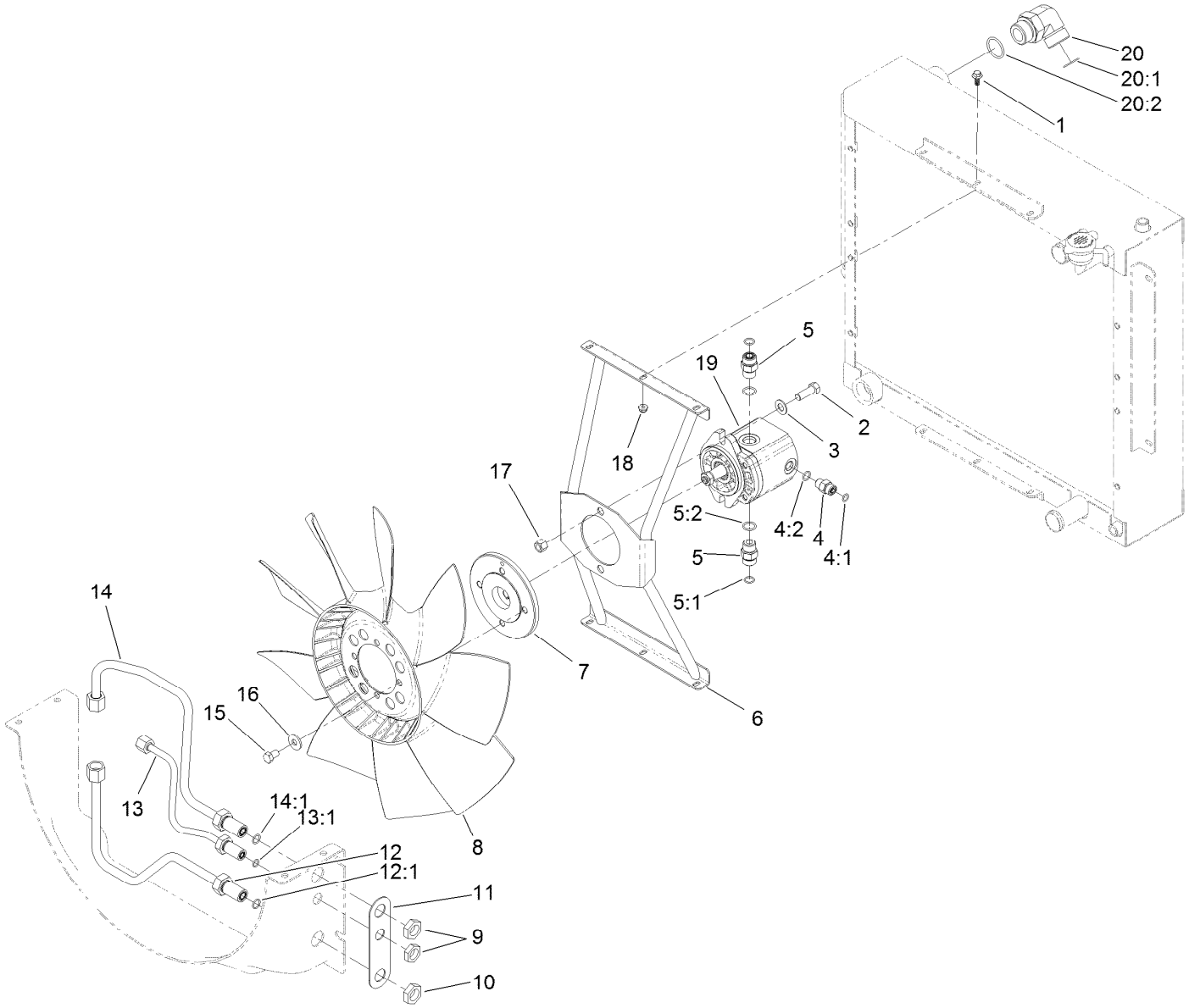

Fan Mounting and Hardline Assembly

Ref.	Part Number	Qty.	Description
1	99-6810	6	Screw-HHF
2	324-5	2	Screw-HH
3	3256-25	2	Washer-Flat
4	340-2	1	Fitting-Straight
4:1	237-22	1	O-Ring
4:2	237-42	1	O-Ring
5	340-4	2	Fitting-Straight
5:1	237-30	1	O-Ring
5:2	237-79	1	O-Ring
6	120-8935-03	1	Bracket-Fan
7	117-2364	1	Hub-Fan
8	114-3825	1	Fan
9	340-70	1	Nut-Lock
10	340-127	2	Nut-Bulkhead
11	121-1518	1	Shim-Support

Ref.	Part Number	Qty.	Description
12	121-1554	1	Tube-HYD
12:1	237-30	1	O-Ring
13	121-1555	1	Tube ASM
13:1	237-22	1	O-Ring
14	121-1553	1	Tube-HYD
14:1	237-30	1	O-Ring
15	115-8486	4	Screw-HH
16	80-6990	4	Washer-Hardened
17	3296-48	2	Nut-Hex
18	104-7201	6	Nut-HF, NI
19	117-4769	1	HYD Motor ASM
20	340-129	1	Fitting-Elbow, 90 DEG
20:1	237-146	1	O-Ring
20:2	340-65	1	O-Ring

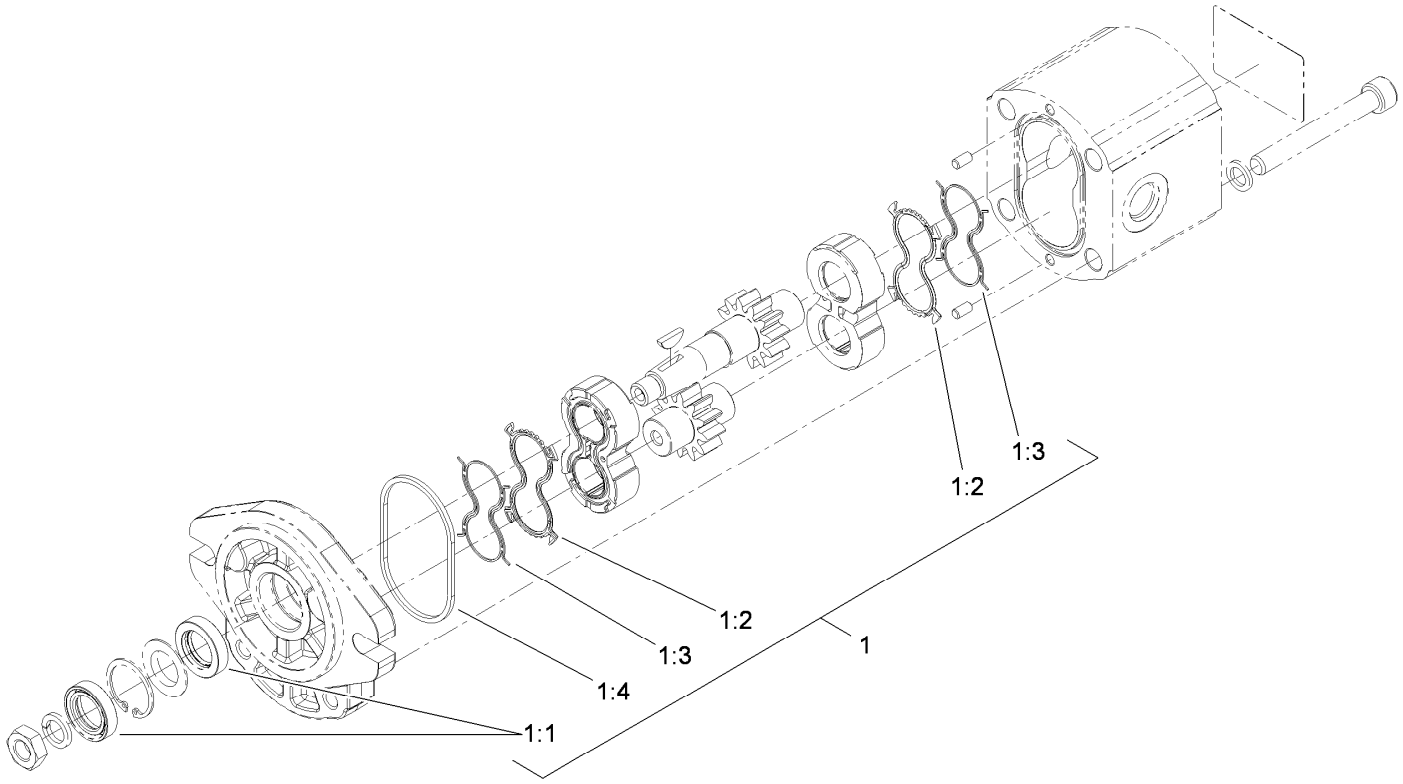

Hydraulic Motor Assembly No. 117-4769

Ref.	*Part Number*	*Qty.*	*Description*
1	115-4110	1	Seal Kit
1:1		2	Seal-Shaft ●
1:2		2	Seal-Plate, Balancing ●
1:3		2	Seal-Anti Extrusion ●
1:4		2	O-Ring (Housing) ●

● Not serviced separately

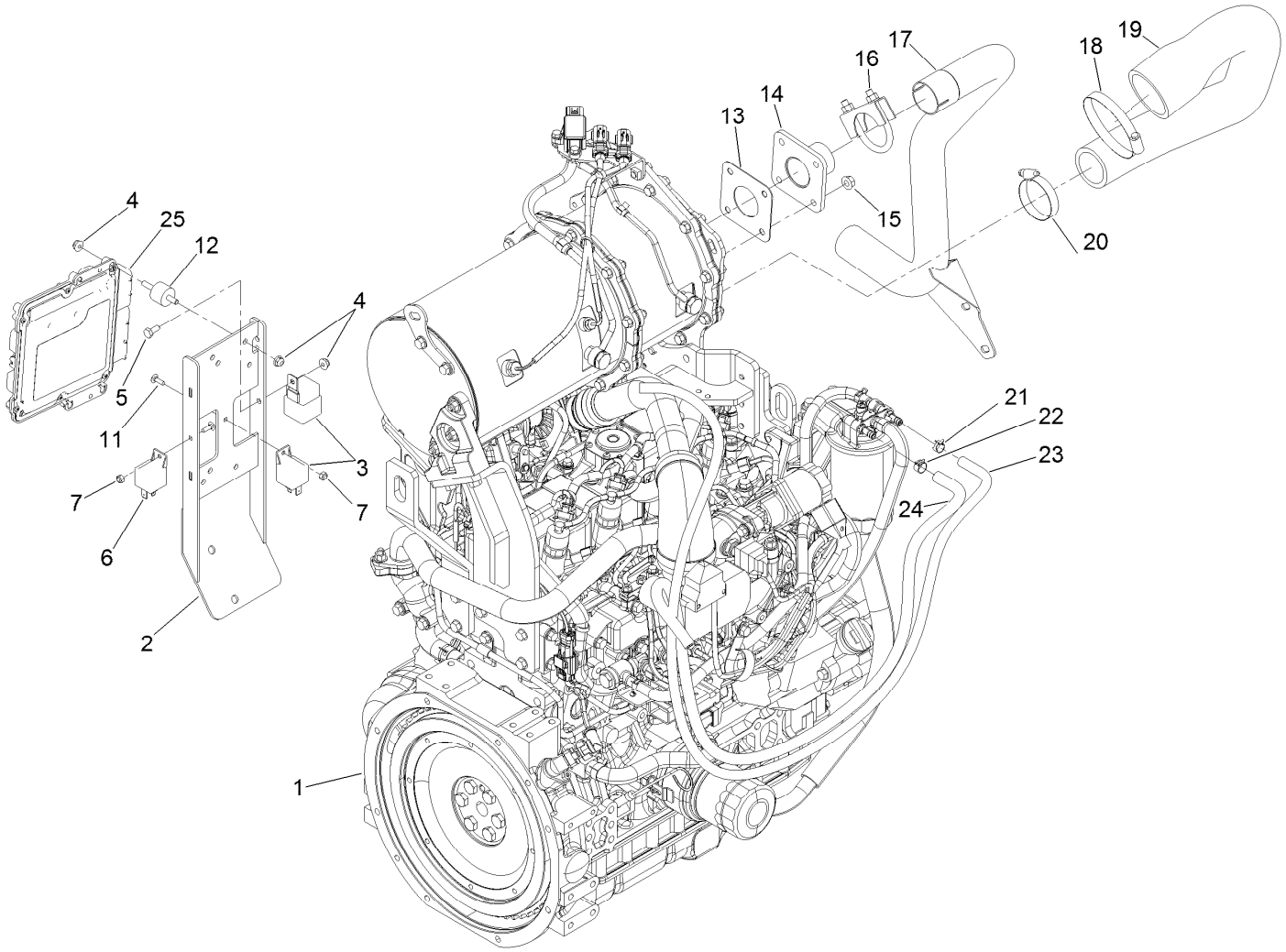

Engine and Controller Assembly

Ref.	Part Number	Qty.	Description
1	120-4111	1	Engine ASM
2	136-4430-03	1	Mount-Controller
3	99-7430	1	Relay-Mini
4	104-7201	9	Nut-HF, NI
5	321-3	1	Screw-HH
6	99-7435	2	Relay
7	3296-2	2	Nut-Lock, NI
11	1-807533	2	Bolt-CARR
12	132-1356	4	Mount-Isolator
13	121-3058	1	Gasket-Exhaust
14	121-3060	1	Flange-Exhaust

Ref.	Part Number	Qty.	Description
15	33004-00	4	Nut-HF
16	18-2130	1	Clamp
17	121-1613	1	Pipe-Exhaust
18	2412-110	1	Clamp-Band/Screw
19	121-1475	1	Hose-Outlet, Air Cleaner
20	2412-130	1	Clamp-Hose
21	2412-98	1	Clamp-Hose
22	92-2379	1	Clamp-Hose
23	115-2368	1	Hose-Fuel
24	110-4007	1	Hose-Fuel
25	121-5592	1	Electronic Control Unit

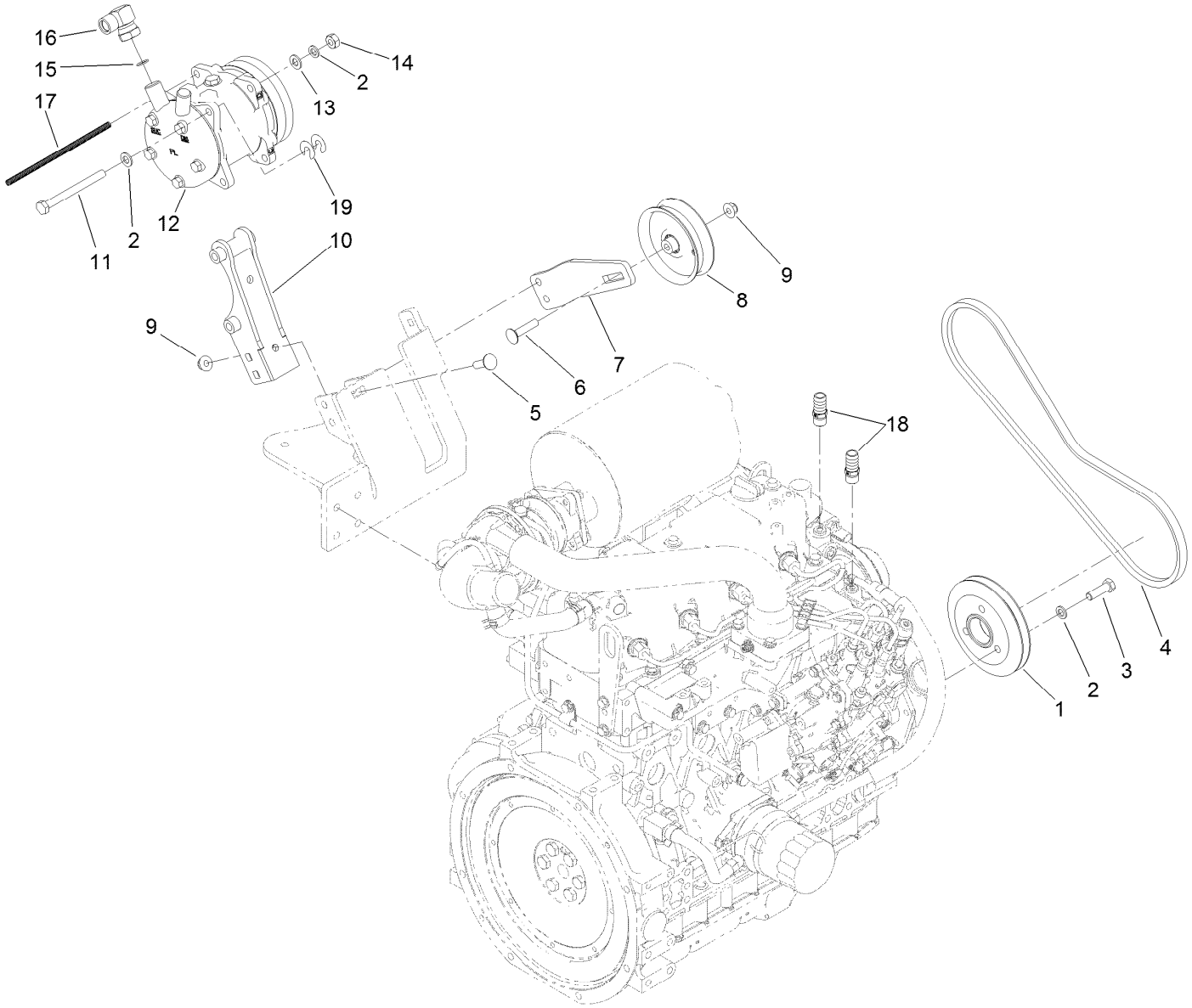

Air Conditioner Compressor Assembly

Ref.	Part Number	Qty.	Description
1	121-8177	1	Pulley-Single
2	48-9590	5	Washer-Lock
3	33115-035	3	Screw-HH
4	110-6254	1	Belt-V
5	3231-25	5	Bolt-CARR
6	3231-5	1	Screw-CARR
7	127-3727-03	1	Mount-Pulley
8	98-3095	1	Pulley-Idler
9	104-8301	6	Nut-HF, NI
10	127-3726-03	1	Mount-Compressor

Ref.	Part Number	Qty.	Description
11	33115-110	2	Screw-HH
12	119-0103	1	Compressor
13	33095-00	4	Washer-Flat
14	33015-00	2	Nut-Hex
15	117-2780	1	O-Ring
16	119-0128	1	Fitting-Elbow, 90 DEG
17	115-8882	1	Conduit-Convoluted
18	117-9410	2	Fitting-Straight
19	119-7734	4	Shim

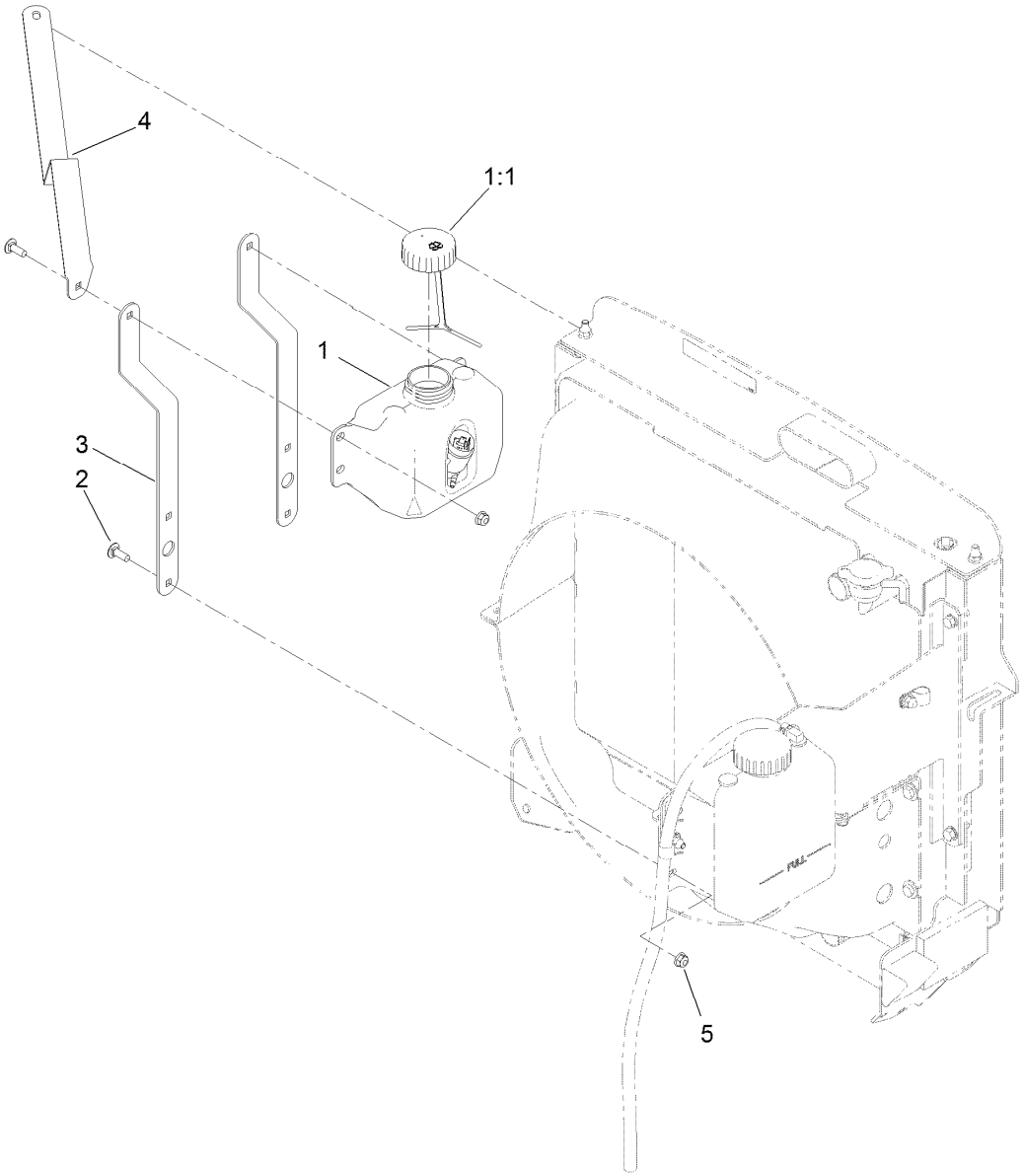

Washer Fluid Bottle Assembly

Ref.	*Part Number*	*Qty.*	*Description*
1	125-5257	1	Tank-Fluid, Washer
1:1	125-5258	1	Lid-Tank, Washer Fluid
2	3230-10	6	Bolt-CARR
3	130-0604-03	2	Strap-Bottle, Washer Fluid
4	130-0605-03	1	Support-Bottle, Washer Fluid
5	104-8300	6	Nut-HF, NI

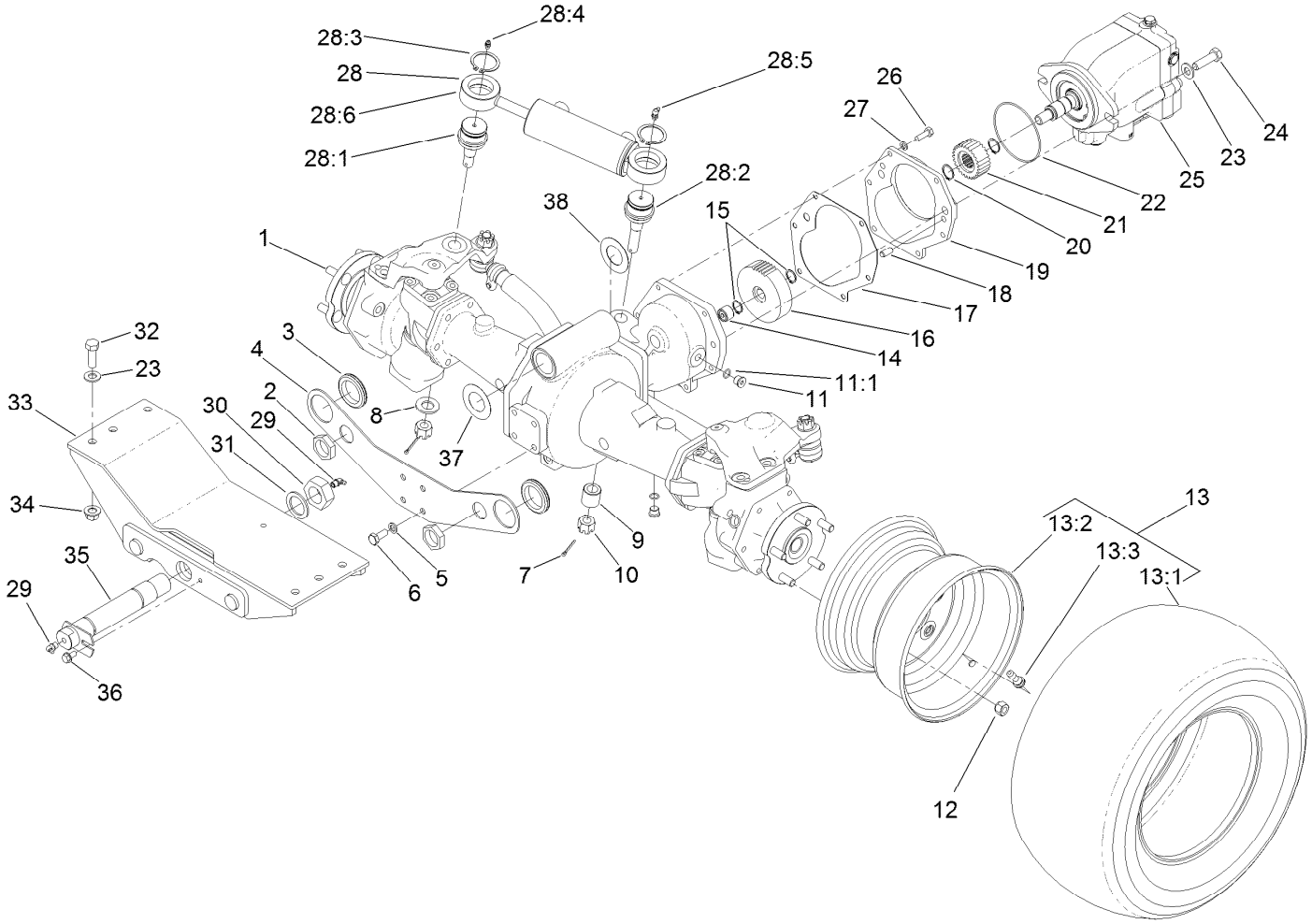

Rear Axle and Steering Cylinder Assembly

Ref.	Part Number	Qty.	Description
1	110-4750	1	Drive Axle ASM
2	340-126	2	Nut-Bulkhead
3	240-2	2	Grommet-Rubber
4	120-9069-03	1	Plate-Mount, Bulkhead
5	43-0090	4	Screw-HH
6	48-9590	4	Washer-Lock
7	3272-12	2	Pin-Cotter
8	92-5836	1	Washer
9	100-3796	1	Spacer-Joint, Ball
10	32136-14	2	Nut-Hst
11	353-989	2	Plug-Hex, Hollow
11:1	237-42	1	O-Ring
12	93-5268	10	Nut-Lug
13		2	Tire And Wheel ASM ●
13:1	120-8910	1	Tire-Off Road
13:2	120-8909	1	Rim
13:3	232-27	1	Stem-Valve
14	74-5700	1	Bearing-Needle, Roller

Ref.	Part Number	Qty.	Description
15	32120-15	2	Ring-Snap, EXT
16	100-3053	1	Gear-45 Tooth
17	106-1140	1	Gasket
18	104-2353	2	Pin-Dowel
19	95-7541	1	Plate-Cover
20	32120-76	2	Ring-Snap, EXT
21	104-0755	1	Pinion-27 Tooth
22	237-166	1	O-Ring
23	3256-26	8	Washer-Flat
24	325-7	2	Screw-HH
25	120-8814	1	HYD Motor ASM
26	33114-025	6	Screw-HH
27	3253-4	6	Washer-Lock
28	121-1535	1	Steering Cylinder ASM
28:1	106-6774	1	Joint-Ball
28:2	100-3795	1	Joint-Ball
28:3	32151-104	2	Ring-Retaining, External
28:4	302-5	1	Fitting-Grease

● Not serviced separately

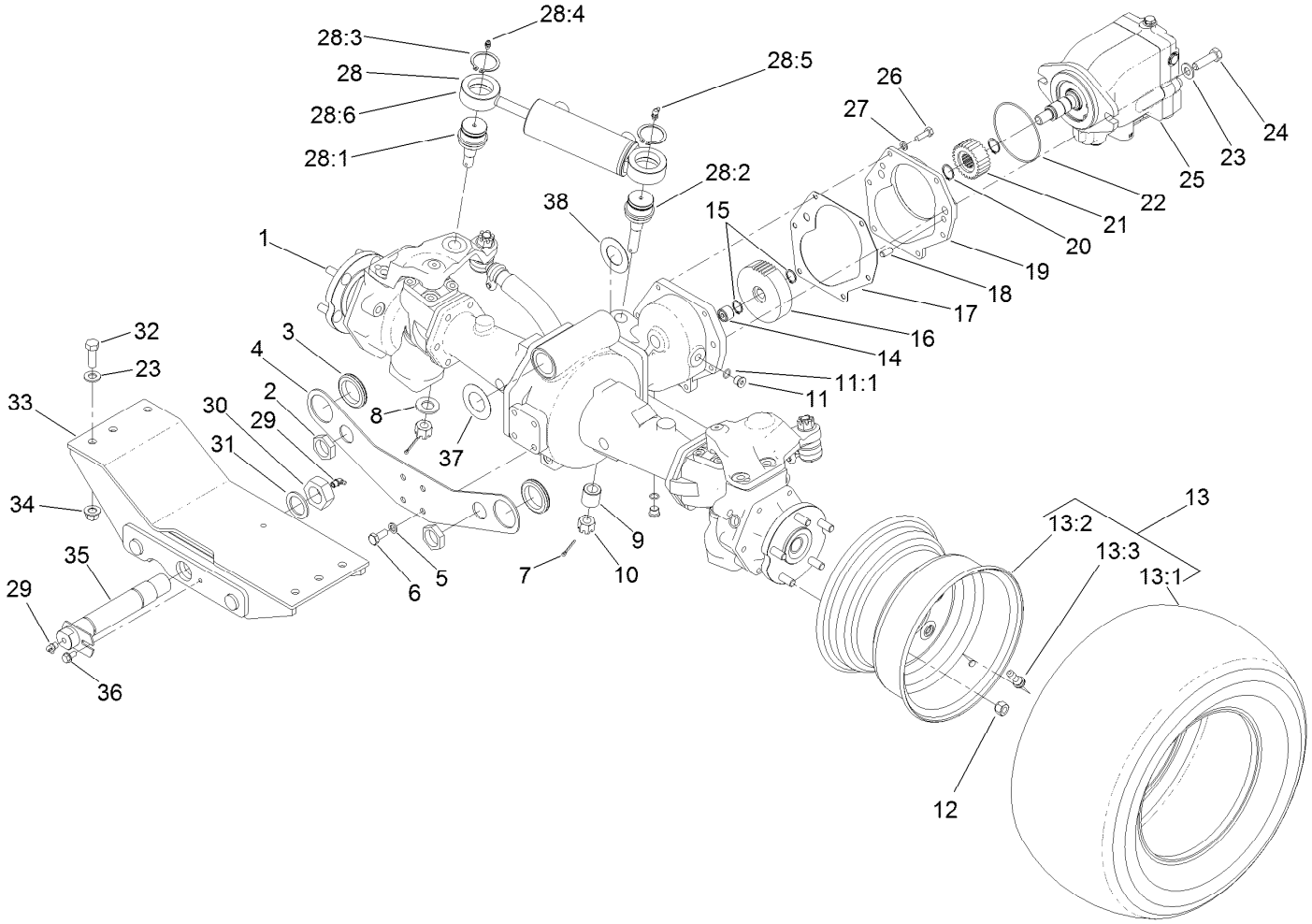

Rear Axle and Steering Cylinder Assembly (continued)

Ref.	Part Number	Qty.	Description
28:5	302-60	1	Fitting-Grease
28:6	121-1534	1	HYD Steering Cylinder ASM
29	302-33	2	Fitting-Grease
30	3296-68	1	Nut-Lock, NI
31	92-1765	1	Washer-Thrust
32	325-6	6	Screw-HH

Ref.	Part Number	Qty.	Description
33	130-2744-03	1	Mount-Rear
34	99-5107	6	Nut-Lock
35	98-7077	1	Pin-Axle, Rear
36	32144-14	1	Screw-HWHTF
37	99-8431	2	Washer-Thrust
38	99-8432	2	Washer-Thrust

● Not serviced separately

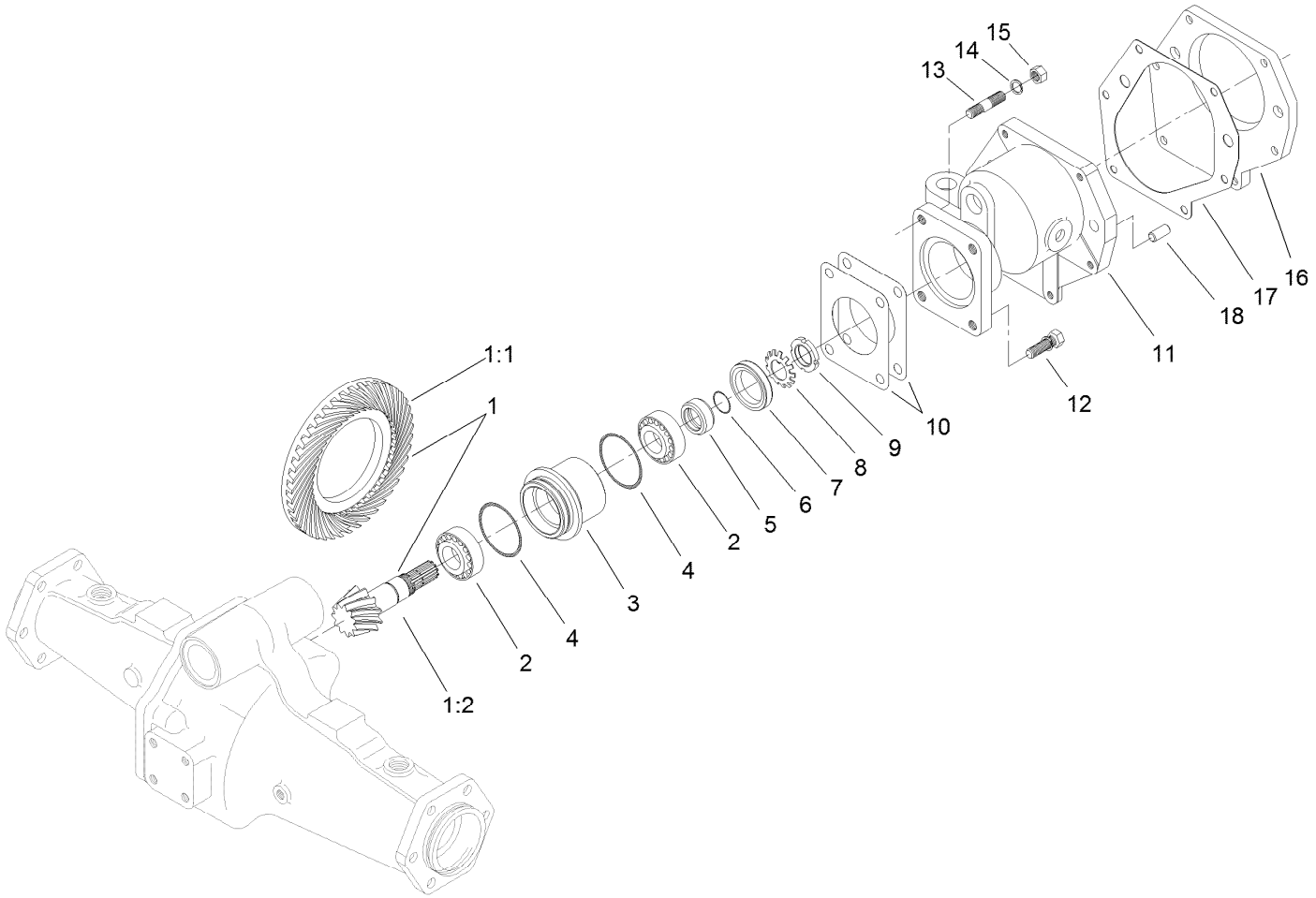

Bevel Pinion Shaft Assembly
Rear Axle Assembly No. 110-4750

Ref.	Part Number	Qty.	Description
1	106-1093	1	Ring And Pinion Set
1:1	95-7504	1	Gear-43 Tooth, Bevel Spiral
1:2	106-1092	1	Pinion-Spiral, Bevel
2	99-7570	2	Bearing-Roller, Taper
3	95-7534	1	Case-Bearing
4	106-1065	2	O-Ring
5	99-7572	1	Collar-Seal, Oil
6	106-1066	1	O-Ring
7	99-7574	1	Seal-Oil
8	99-7559	1	Washer-Lock
9	99-7560	1	Nut-Lock

Ref.	Part Number	Qty.	Description
10	99-7550	2	Shim 0.1
10	99-7551	2	Shim 0.2
11	95-7533	1	Case-Gear
12	99-7575	2	Bolt
13	98-7735	2	Stud
14	99-7527	2	Washer-Spring
15	99-7526	2	Nut
16	95-7541	1	Plate-Cover
17	106-1140	1	Gasket
18	104-2353	2	Pin-Dowel

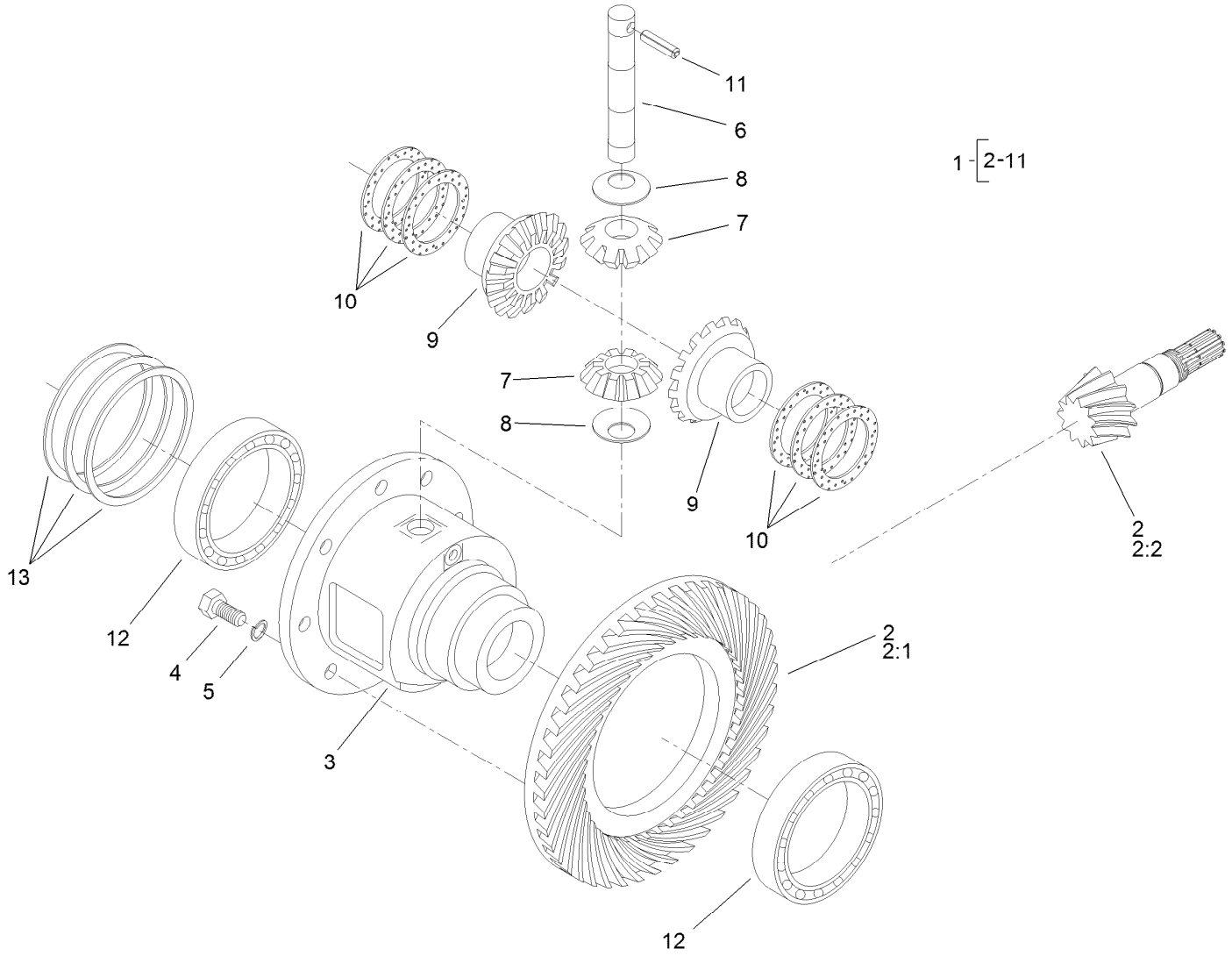

Differential Assembly
Rear Axle Assembly No. 110-4750

Ref.	Part Number	Qty.	Description
1	95-7503	1	Differential ASM
2	106-1093	1	Ring And Pinion Set
2:1	95-7504	1	Gear-43 Tooth, Bevel Spiral
2:2	106-1092	1	Pinion-Spiral, Bevel
3	95-7502	1	Case-Differential
4	99-7576	8	Bolt
5	3253-4	8	Washer-Lock
6	99-7578	1	Shaft-Differential
7	99-7579	2	Pinion-Differential
8	99-7580	2	Washer-Differential
9	99-7581	2	Gear-Differential
10	99-7582	2	Washer-Differential
10	99-7583	2	Washer-Differential
10	99-7584	2	Washer-Differential
11	99-7588	1	Pin-Spring
12	99-7562	2	Bearing-Ball
13	99-7585	2	Shim 0.1
13	99-7586	2	Shim 0.2
13	99-7587	2	Shim 0.4

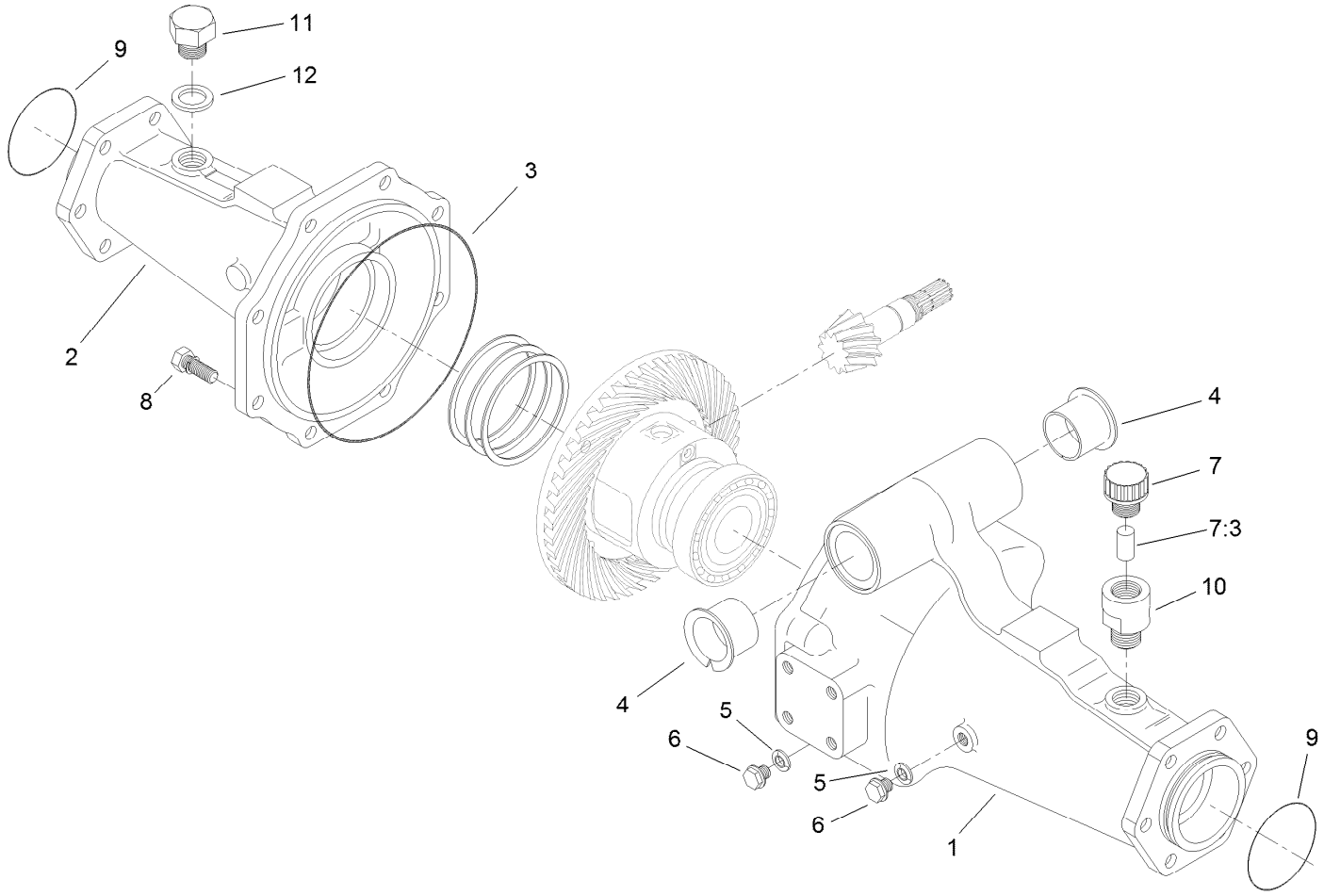

Axle Support Assembly
Rear Axle Assembly No. 110-4750

Ref.	*Part Number*	*Qty.*	*Description*
1	95-7508	1	Support-Axle
2	95-7506	1	Support-Axle
3	106-1067	1	O-Ring
4	95-7537	2	Bushing-Flanged
5	99-7590	2	Washer-Seal
6	99-7589	2	Plug
7	110-4812	1	Axle Vent ASM
7:3	110-4815	1	Insert-Filter, Foam
8	99-7592	8	Bolt
9	106-1068	2	O-Ring
10	104-2377	1	Extension-Vent
11	104-8643	1	Plug
12	104-8644	1	O-Ring

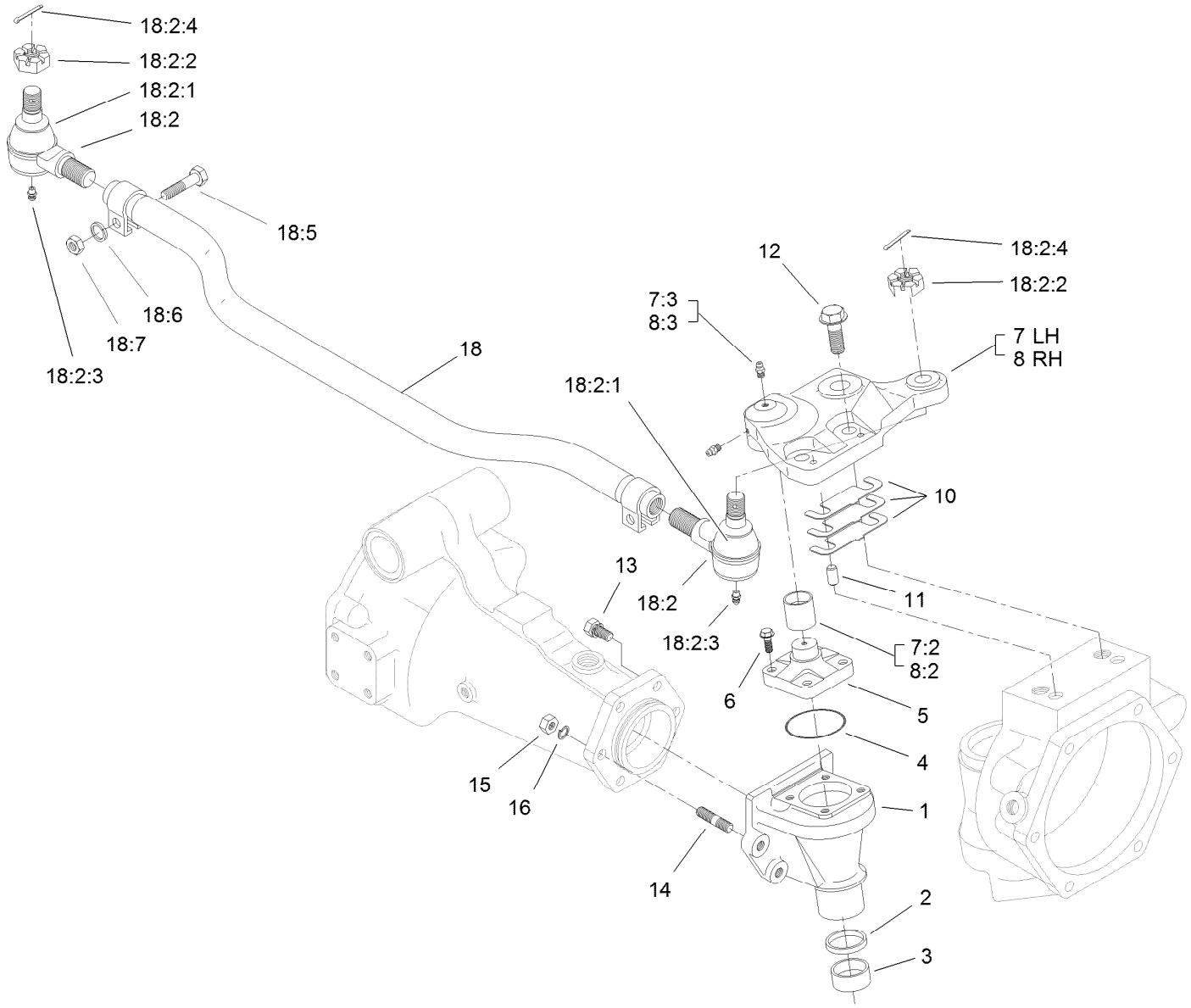

Bevel Gear Case Assembly
Rear Axle Assembly No. 110-4750

Ref.	Part Number	Qty.	Description
1	110-4752	2	Case-Gear, Bevel
2	110-4754	2	Seal-Oil
3	104-2378	2	Bushing
4	106-1069	2	O-Ring
5	104-2373	2	Knuckle
6	104-2374	8	Bolt
7	100-3768	1	LH Steering Arm ASM
7:2	104-8634	1	Bushing
7:3	106-1104	2	Fitting-Grease
8	100-3766	1	RH Steering Arm ASM
8:2	104-8634	1	Bushing
8:3	106-1104	2	Fitting-Grease
10	95-7547	2	Shim 0.1
10	95-7548	2	Shim 0.2
10	95-7549	2	Shim 0.3
11	99-7597	4	Pin-Dowel

Ref.	Part Number	Qty.	Description
12	104-2375	4	Bolt
13	99-7599	8	Bolt
14	99-7525	4	Stud
15	99-7526	4	Nut
16	99-7527	4	Washer-Spring
18	106-1141	1	Steering Tie Rod ASM
18:2	106-1113	2	Tie Rod End ASM - RH Thread
18:2:1	100-3853	1	Cover-Dust
18:2:2	100-3854	1	Nut-Castle
18:2:3	110-4755	1	Fitting-Grease
18:2:4	3272-11	1	Pin-Cotter
18:5	100-3855	2	Bolt
18:6	99-7527	2	Washer-Spring
18:7	99-7526	2	Nut

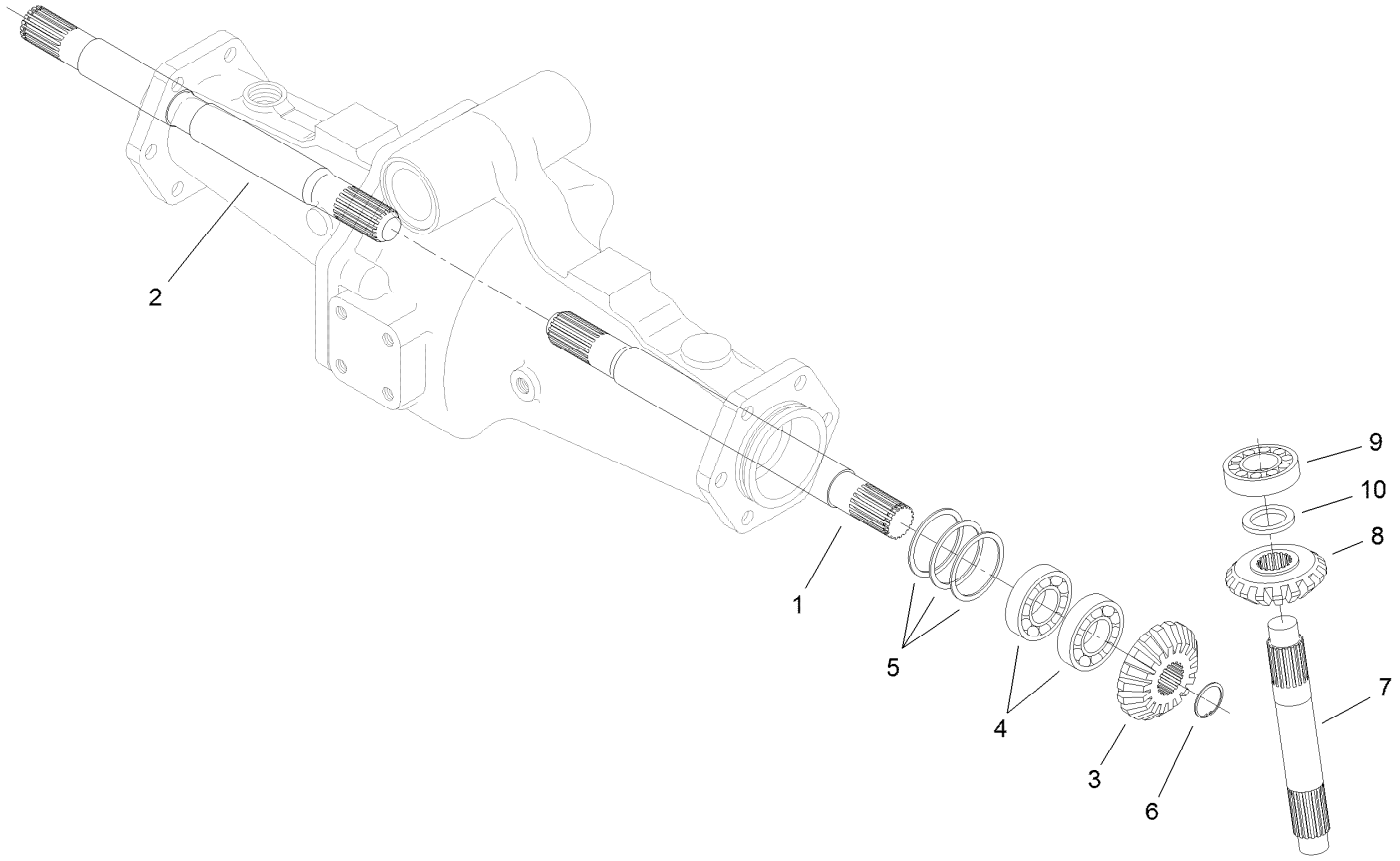

Bevel Gear Shaft Assembly
Rear Axle Assembly No. 110-4750

Ref.	*Part Number*	*Qty.*	*Description*
1	95-7509	1	Shaft-Gear, Differential
2	95-7512	1	Shaft-Gear, Differential
3	95-7517	2	Gear-Bevel, 15 Tooth
4	99-7530	4	Bearing-Ball
5	99-7552	2	Shim 0.1
5	99-7553	2	Shim 0.2
5	99-7554	2	Shim 0.5
6	99-7531	2	Clip
7	110-4753	2	Shaft-Gear, Bevel
8	95-7519	2	Gear-Bevel, 17 Tooth
9	99-7532	2	Bearing-Roller, Taper
10	99-7558	2	Collar

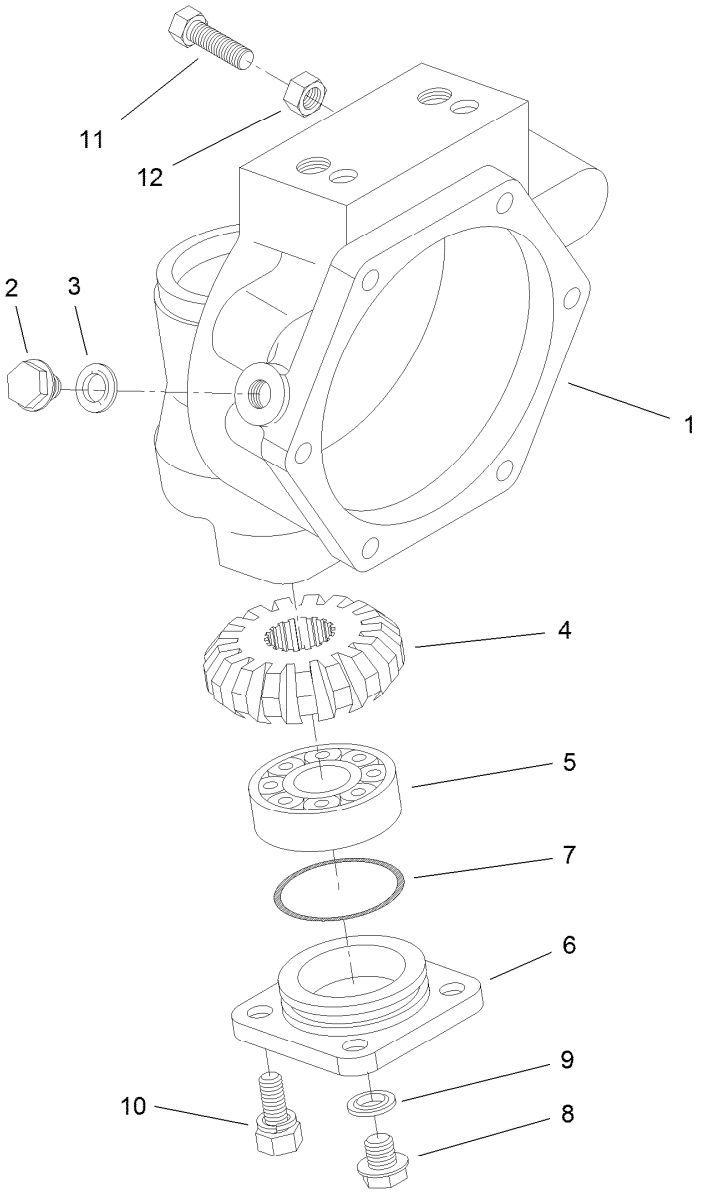

Axle Case Assembly
Rear Axle Assembly No. 110-4750

Ref.	*Part Number*	*Qty.*	*Description*
1	110-4751	2	Case-Axle
2	99-7535	2	Plug
3	99-7536	2	Washer-Seal
4	95-7527	2	Gear-Bevel, 17 Tooth
5	99-7532	2	Bearing-Roller, Taper
6	100-2560	2	Cover
7	106-1070	2	O-Ring
8	99-7589	2	Plug
9	99-7590	2	Washer-Seal
10	100-2562	8	Bolt
11	106-1102	2	Bolt-Stop
12	106-1103	2	Nut

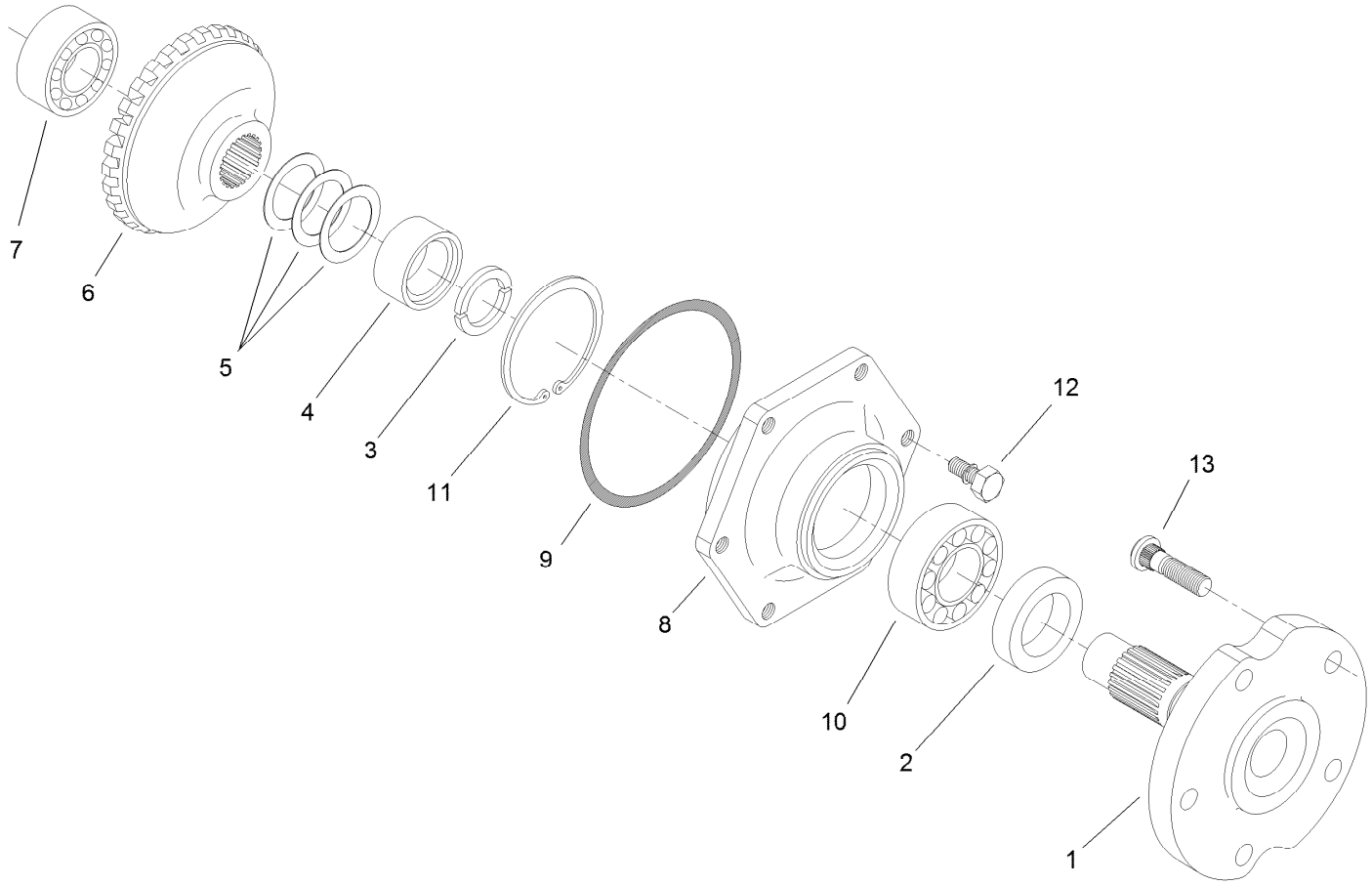

Axle Assembly
Rear Axle Assembly No. 110-4750

Ref.	*Part Number*	*Qty.*	*Description*
1	95-7522	2	Axle
2	99-7564	2	Seal-Oil
3	95-7544	4	Clip
4	95-7523	2	Spacer
5	99-7555	2	Shim 0.3
5	99-7556	2	Shim 0.2
5	99-7557	2	Shim 0.5
6	95-7524	2	Gear-Bevel, 29 Tooth
7	99-7534	2	Bearing-Ball
8	95-7521	2	Cover-Axle
9	106-1071	2	O-Ring
10	99-7561	2	Bearing-Ball
11	99-7539	2	Clip
12	99-7596	12	Bolt
13	99-7563	10	Stud

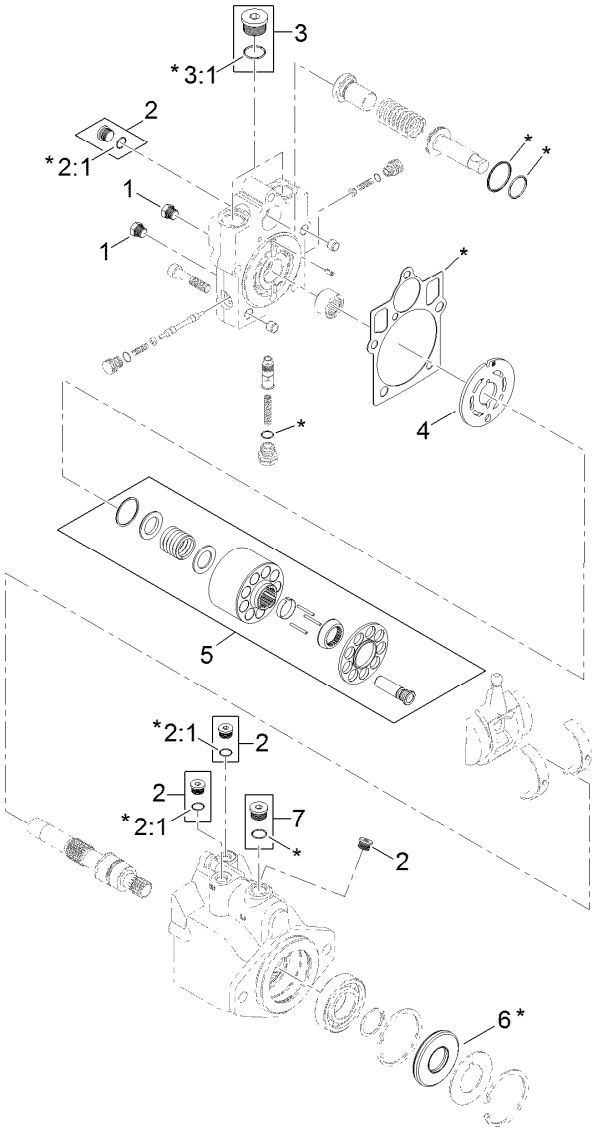

8 = all items with * are included in overhaul seal kit

Hydraulic Motor Assembly No. 120-8814

Ref.	*Part Number*	*Qty.*	*Description*
1	92-1352	2	Plug
2	69-3080	5	Plug
2:1		1	O-Ring ●
3	69-3130	2	Plug
3:1		1	O-Ring ●
4	121-1734	1	Plate-Valve
5	110-6472	1	Cylinder Block Kit ASM
6	69-3190	1	Seal-Lip
7	67-9090	1	Plug
8	121-1736	1	Overhaul Seal Kit

● Not serviced separately

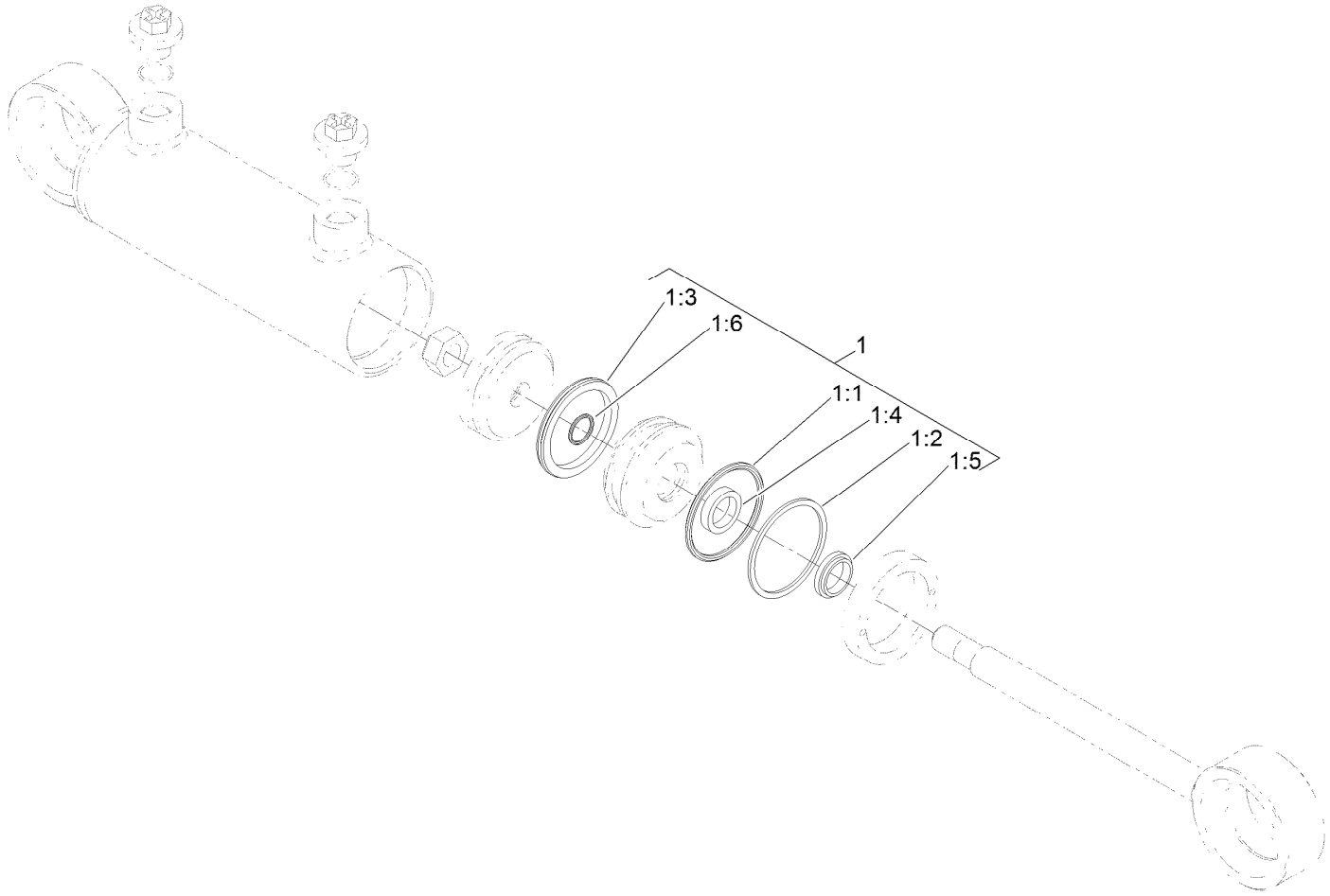

Steering Cylinder Assembly No. 121-1534

Ref.	*Part Number*	*Qty.*	*Description*
1	125-4302	1	Seal Kit
1:1		1	O-Ring ●
1:2		1	Backup ●
1:3		1	Bp Seal ●
1:4		1	Bt Seal ●
1:5		1	Dust Seal ●
1:6		1	O-Ring ●

● Not serviced separately

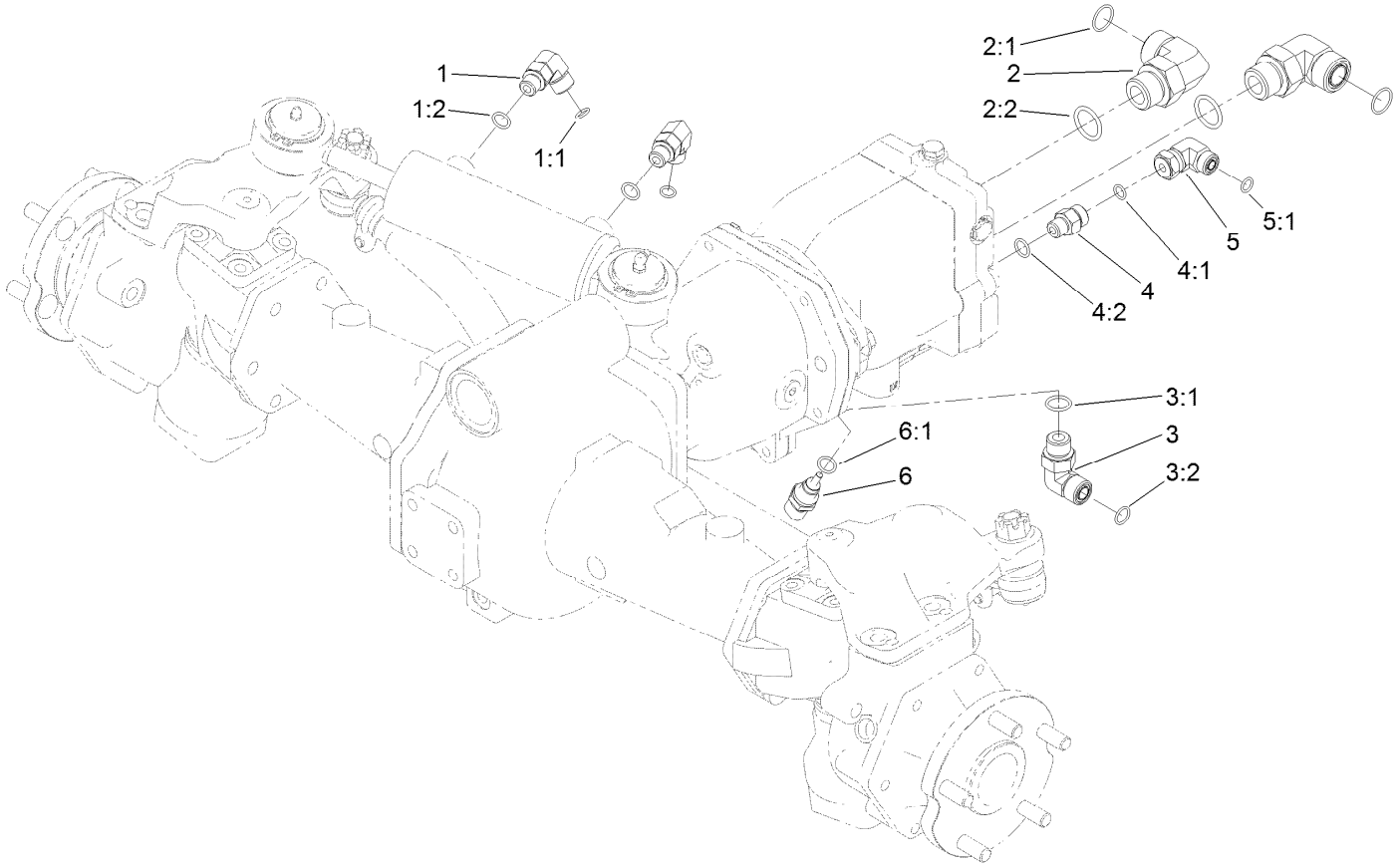

Hydraulic Fitting Assembly

Ref.	Part Number	Qty.	Description
1	340-77	2	Fitting-Elbow, 90 DEG
1:1	237-22	1	O-Ring
1:2	237-42	1	O-Ring
2	340-142	2	Fitting-Elbow, 90 DEG
2:1	237-58	1	O-Ring
2:2	237-81	1	O-Ring
3	340-98	1	Fitting-Elbow, 90 DEG
3:1	237-79	1	O-Ring

Ref.	Part Number	Qty.	Description
3:2	237-30	1	O-Ring
4	340-2	1	Fitting-Straight
4:1	237-22	1	O-Ring
4:2	237-42	1	O-Ring
5	340-159	1	Elbow-90
5:1	237-22	2	O-Ring
6	110-8829	1	Sender-Temperature
6:1	237-42	1	O-Ring

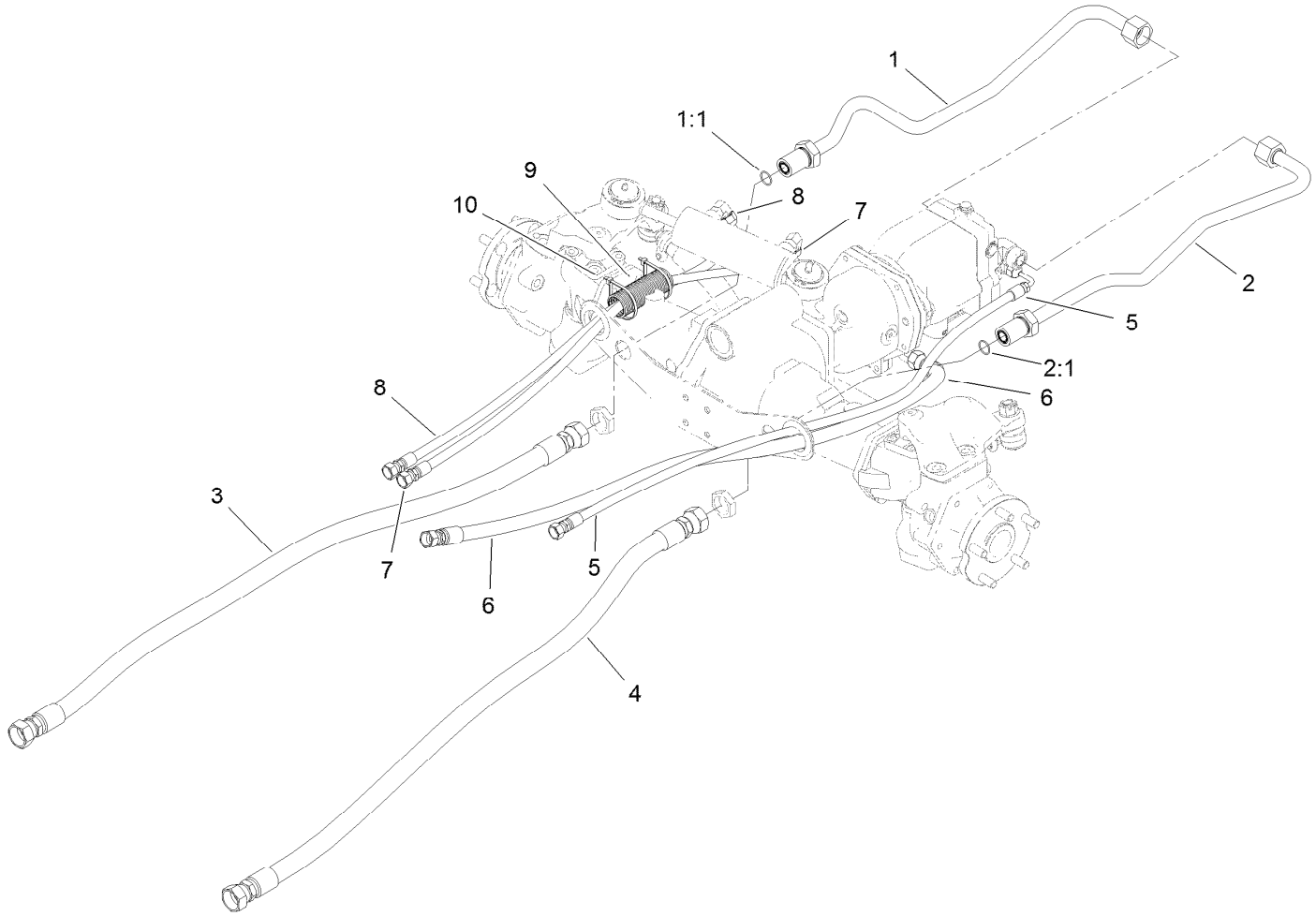

Hose and Tube Routing Assembly

Ref.	*Part Number*	*Qty.*	*Description*
1	120-9067	1	HYD Tube ASM
1:1	237-58	1	O-Ring
2	120-9068	1	Tube ASM
2:1	237-58	1	O-Ring
3	121-1502	1	Hose-HYD
4	114-0024	1	Hose-HYD
5	121-1459	1	Hose-HYD
6	121-1458	1	Hose-HYD
7	121-1500	1	Hose-HYD
8	121-1501	1	Hose-HYD
9	121-1544	2	Cover-Hose
10	3290-379	4	Tie-Cable

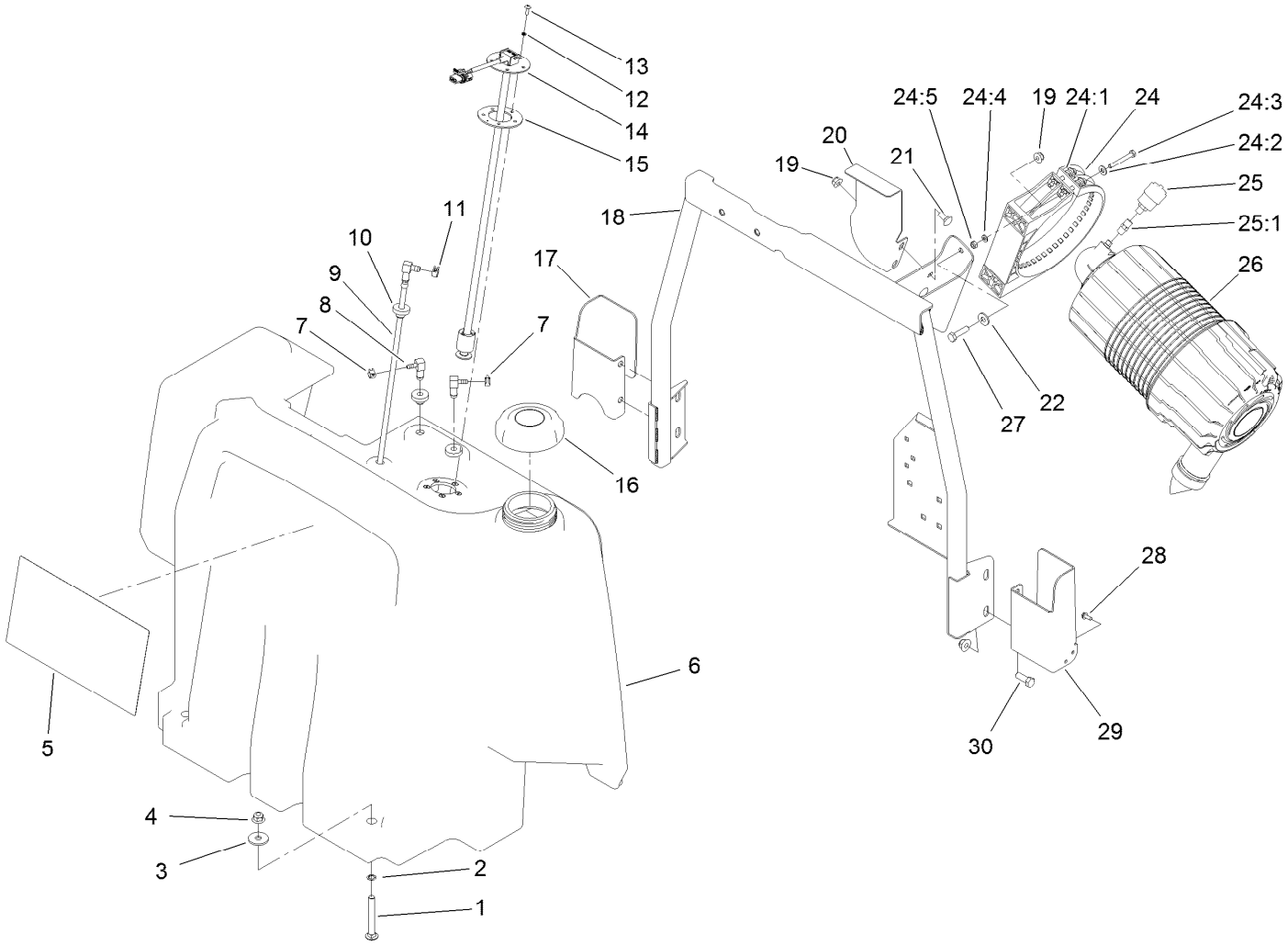

Fuel Tank and Air Cleaner Assembly

Ref.	Part Number	Qty.	Description
1	3231-10	2	Screw-CARR
2	32151-72	2	Ring-Retaining
3	63-8410	2	Washer
4	104-8301	6	Nut-HF, NI
5	130-6042	1	Decal-Service
5	130-6043	1	Decal-Service
6	120-4195	1	Tank-Fuel
7	2412-98	2	Clamp-Hose
8	104-5228	2	Fitting-Elbow, 90 DEG
9	120-8908	1	Pipe-Stand
10	46-6560	3	Bushing
11	92-2379	1	Clamp-Hose
12	3253-15	5	Washer-Lock
13	32122-24	5	Screw-PTH
14	121-1688	1	Gauge-Fuel
15	121-1707	1	Gasket-Fuel, Viton
16	119-8266	1	Cap-Fuel (Biodiesel)
16	125-9171	1	Cap-Fuel
17	121-1514-03	1	Bracket-Latch, RH

Ref.	Part Number	Qty.	Description
18	120-4190-03	1	Support-Tank
19	104-8300	4	Nut-HF, NI
20	120-4193-03	1	Bracket-Fuel Tank
21	3230-1	2	Bolt-CARR
22	3256-3	2	Washer-Flat
24	99-5414	1	Strap-Cleaner, Air
24:1	108-1512	2	Spring
24:2	3256-22	2	Washer-Flat
24:3	33113-050	2	Screw-HH
24:4	33093-00	2	Washer-Flat
24:5	33023-00	2	Nut-Lock
25	104-3563	1	Indicator
25:1	94-1416	1	Adapter-Indicator
26	99-5410	1	Air Cleaner ASM
27	322-6	2	Screw-HH
28	32144-1	4	Screw-Taptite
29	121-1513-03	1	Bracket-Latch, LH
30	323-6	4	Screw-HH

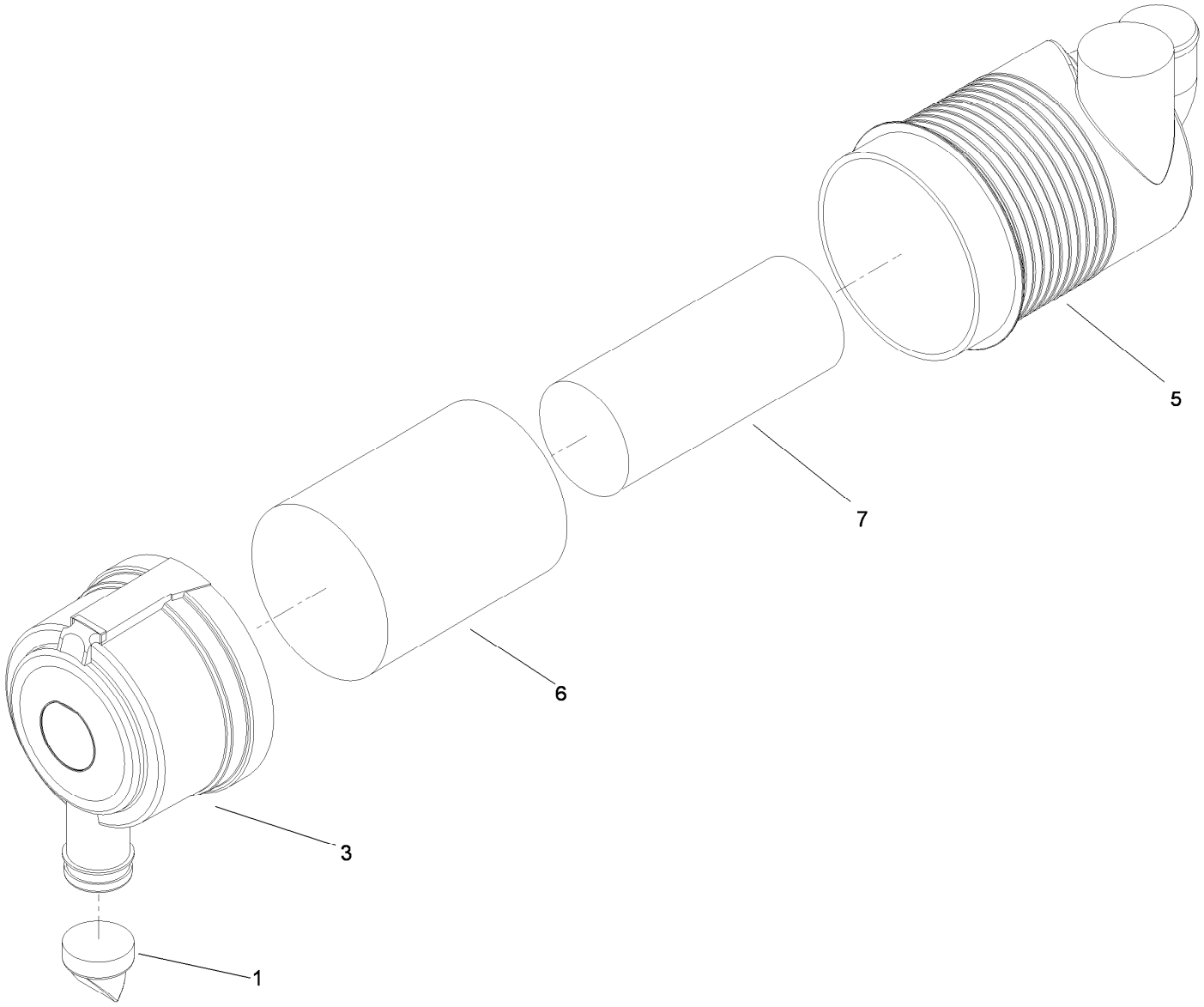

Air Cleaner Assembly No. 99-5410

Ref.	*Part Number*	*Qty.*	*Description*
1	104-4258	1	Valve-Vacuator
3	104-4259	1	Cover
5		1	Body ASM ●
6	108-3814	1	Filter-Air
7	108-3816	1	Filter-Air

● Not serviced separately

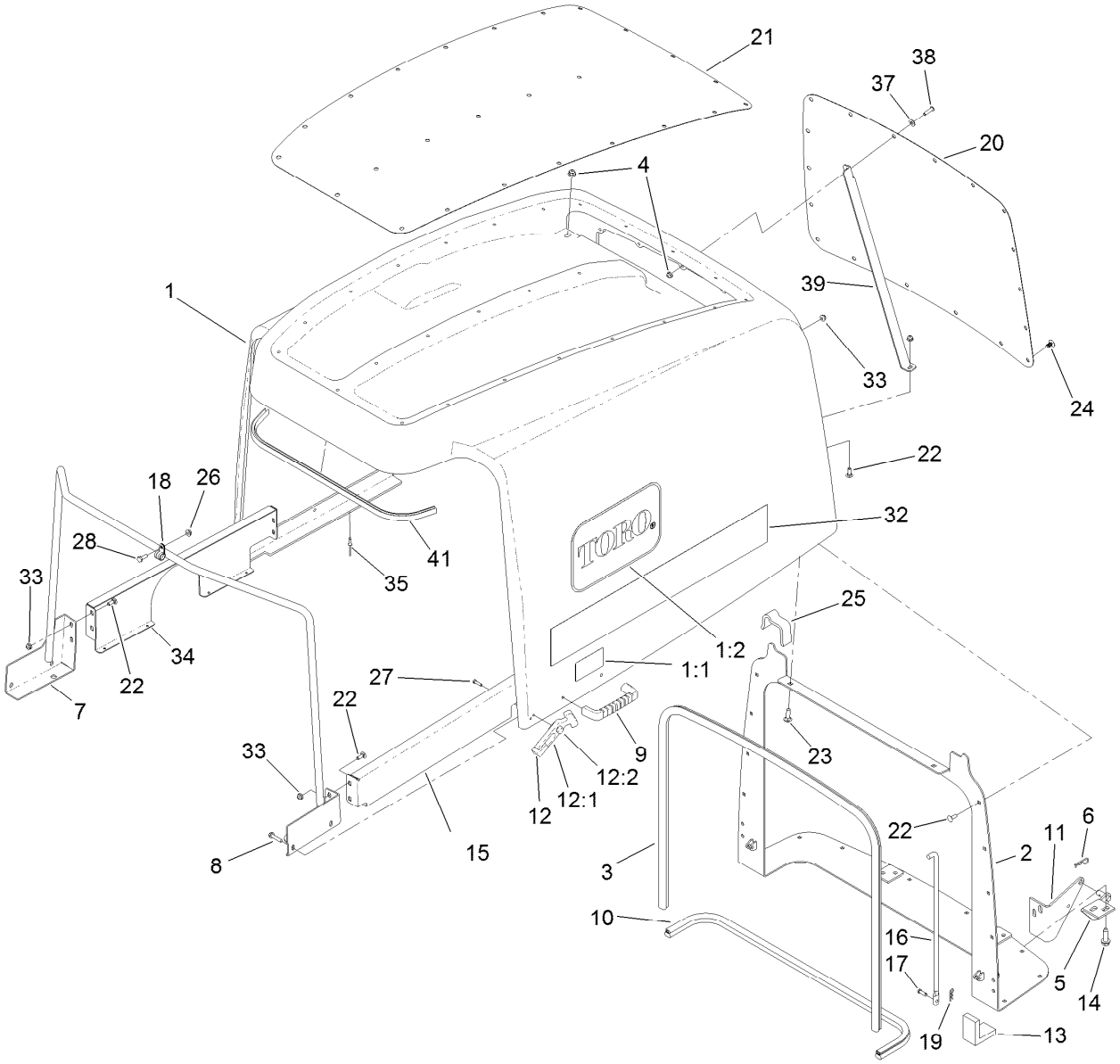

Hood Assembly

Ref.	Part Number	Qty.	Description
1	120-9090	1	Hood ASM
1:1	106-6754	2	Decal-Danger
1:2	66-1210	2	Decal
2	120-9099-03	1	Pivot-Hood
3	114-3823	1	Seal-Bulb
4	104-8300	2	Nut-HF, NI
5	121-1470	2	Pivot-Screen
6	3290-467	2	Pin-Hair
7	120-4196-03	1	Support-Hood
8	46-8092	4	Screw-Plastite
9	65-5100	2	Handle-Door
10	104-3590	1	Seal-Bulb
11	104-3588-03	2	Pivot-Screen
12	94-5626	2	Flexible Draw Latch ASM
12:1	103-4080	1	Latch-Rubber
12:2	103-4081	1	Latch-Keeper
13	104-3580	2	Seal-Corner, Screen
14	32144-109	8	Screw-Thd
15	120-8949-03	1	Support-Hood, LH
16	104-8313	2	Rod-Hood

Ref.	Part Number	Qty.	Description
17	283-67	2	Pin-Clevis
18	2412-134	2	Clamp-R
19	3290-307	2	Pin-Cotter
20	120-9096-03	1	Screen-Hood, Rear
21	120-9097-03	1	Screen-Hood, Top
22	3229-1	24	Screw-CARR
23	3230-2	2	Bolt-CARR
24	117-2382	42	Plug-Plastic
25	120-9087	2	Seal-Foam
26	32128-33	2	Nut-HF
27	32104-4	2	Screw
28	321-4	2	Screw-HH
32	119-0054	2	Decal-Hood
33	104-7201	25	Nut-HF, NI
34	120-8948-03	1	Support-Hood, RH
35	3269-4	8	Rivet-Pop
37	3256-1	1	Washer-Flat
38	3274-65	1	Screw-HSBH
39	127-3707-03	1	Support-Hood
41	132-6181	1	Trim

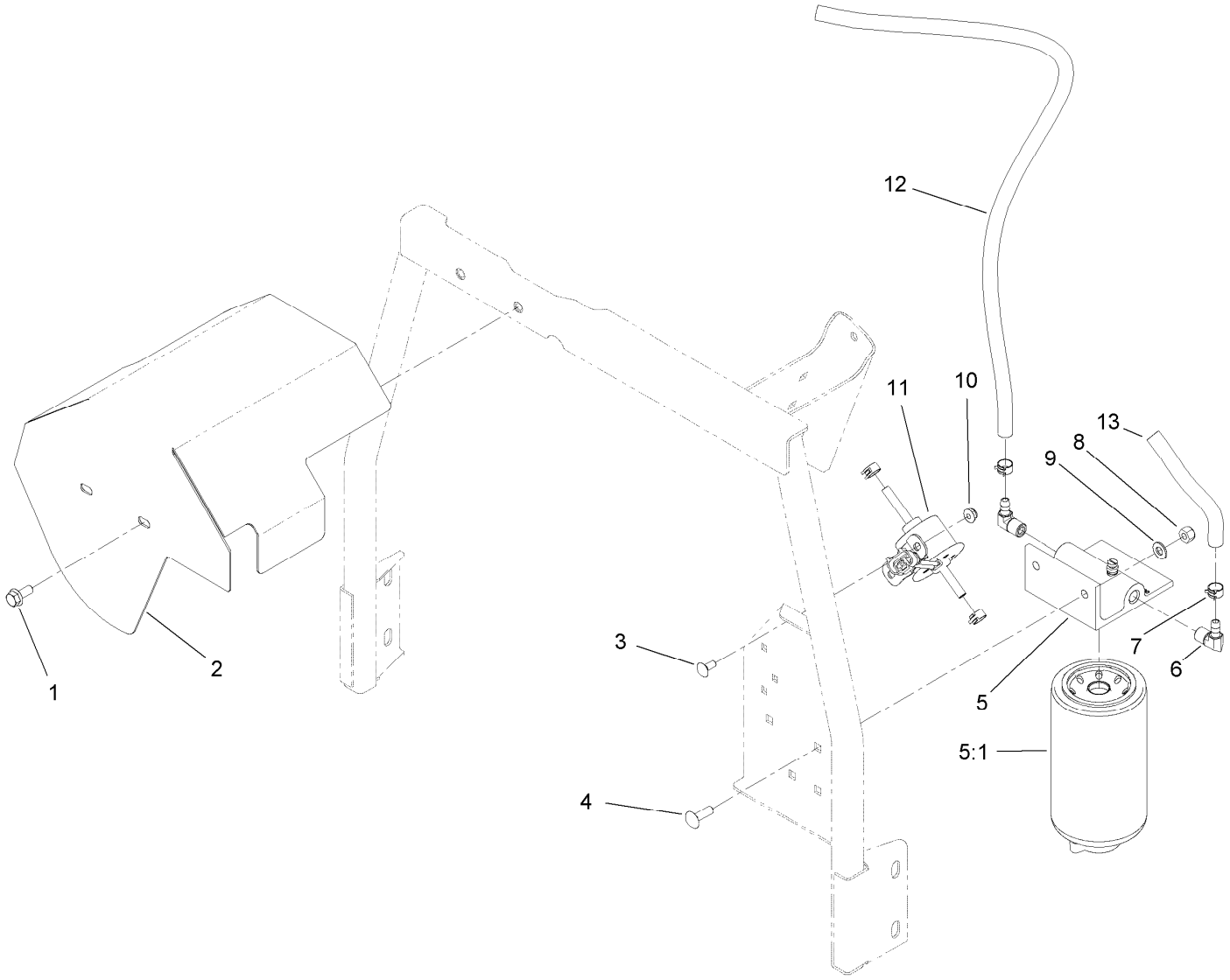

Fuel/Water Separator and Shield Assembly

Ref.	*Part Number*	*Qty.*	*Description*
1	3234-47	2	Screw-HHF
2	120-4188-03	1	Bracket-Guard, Fuel Tank
3	3229-11	2	Screw-CARR
4	3230-22	2	Screw-CARR
5	125-2914	1	Filter-Separator
5:1	125-2915	1	Filter-Fuel/Water Separator
6	353-781	2	Fitting-HYD, 90
7	92-2379	4	Clamp-Hose
8	3296-29	2	Nut-Lock, NI
9	3256-23	2	Washer-Plain
10	104-7201	2	Nut-HF, NI
11	121-5613	1	Pump-Fuel, Electric
12	109-0309	1	Hose-Fuel
13	110-3256	1	Hose-Fuel

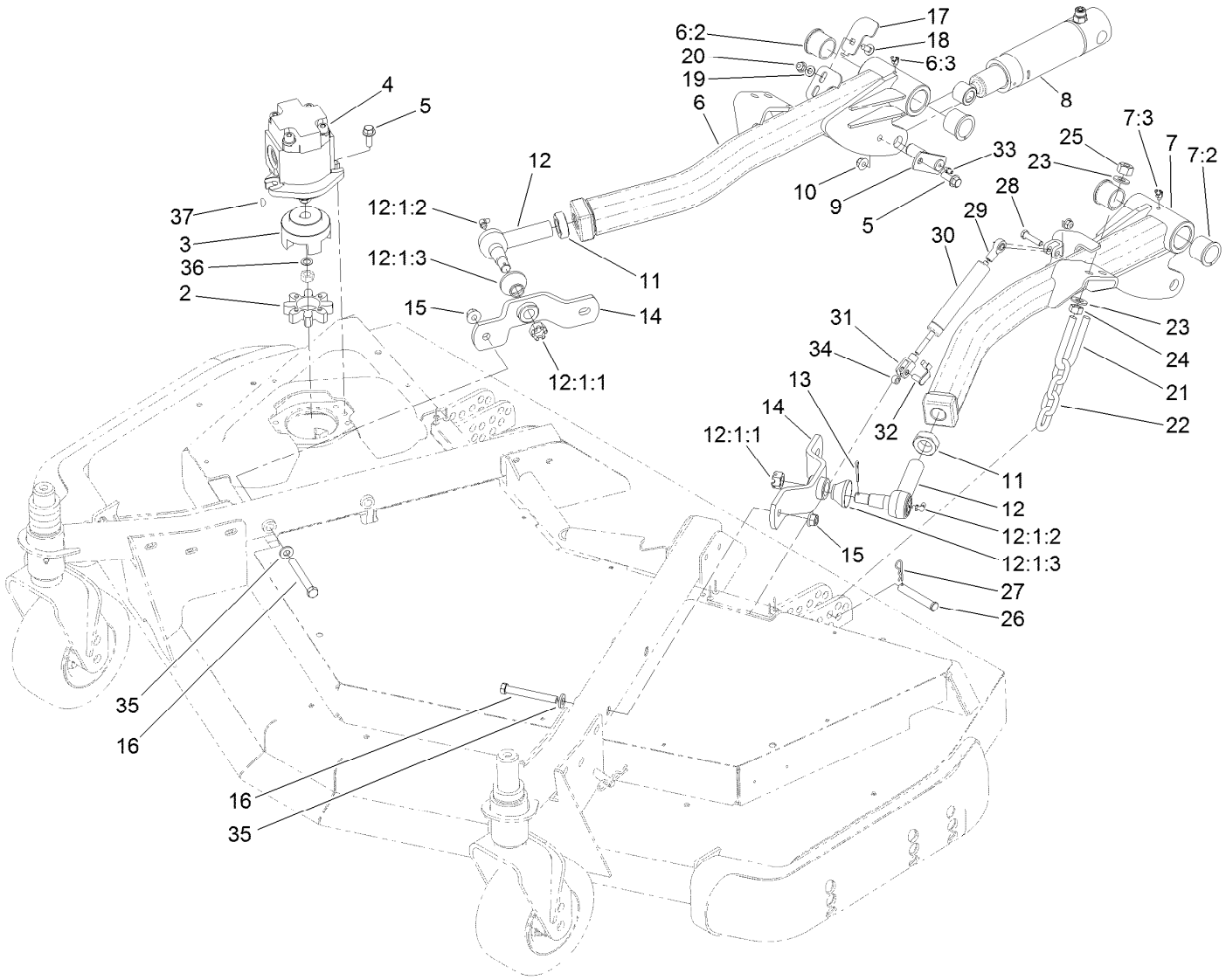

Front Deck Installation Assembly

Ref.	Part Number	Qty.	Description
2	104-3542	1	Spider
3	104-3541	1	Hub-Spider
4	127-3694	1	HYD Motor ASM
5	3234-42	4	Screw-HHF
6	120-8878	1	RH Lift Arm ASM
6:2	104-0015	2	Bushing-Flange
6:3	302-11	1	Fitting-Lube, 45 DEG
7	120-8879	1	LH Lift Arm ASM
7:2	104-0015	2	Bushing-Flange
7:3	302-11	1	Fitting-Lube, 45 DEG
8	120-8802	2	HYD Cylinder ASM
9	100-3020	2	Pin
10	104-8301	2	Nut-HF, NI
11	21-3001	2	Nut-Jam
12	86-8101-01	2	Joint-Ball, LH
12:1:1	32136-2	1	Nut-SHH
12:1:2	302-40	1	Fitting-Grease, 90 DEG
12:1:3	114-2874	1	Seal-Ball Joint
13	3272-12	2	Pin-Cotter
14	93-4583-01	2	Mount-Joint, Ball
15	114-8417	4	Nut-HF, NI

Ref.	Part Number	Qty.	Description
16	324-19	4	Screw-HH
17	120-8893	1	Plate-Sensor
18	3230-23	1	Bolt-CARR
19	3256-23	1	Washer-Plain
20	104-8300	2	Nut-HF, NI
21	104-0108	2	U-Bolt
22	95-6231	2	Chain-HOC
23	3256-26	8	Washer-Flat
24	3217-9	4	Nut-HH
25	3296-25	4	Nut-Lock, NI
26	283-55	2	Pin-Clevis
27	3290-467	2	Pin-Hair
28	322-17	1	Screw-HH
29	104-8331	1	End-Rod, Spherical
30	105-3249	1	Damper
31	115-5455	1	End-Rod, Clevis
32	115-5454	1	Pin-Spring
33	302-5	2	Fitting-Grease
34	115-2142	1	Spacer
35	87-7480	4	Washer

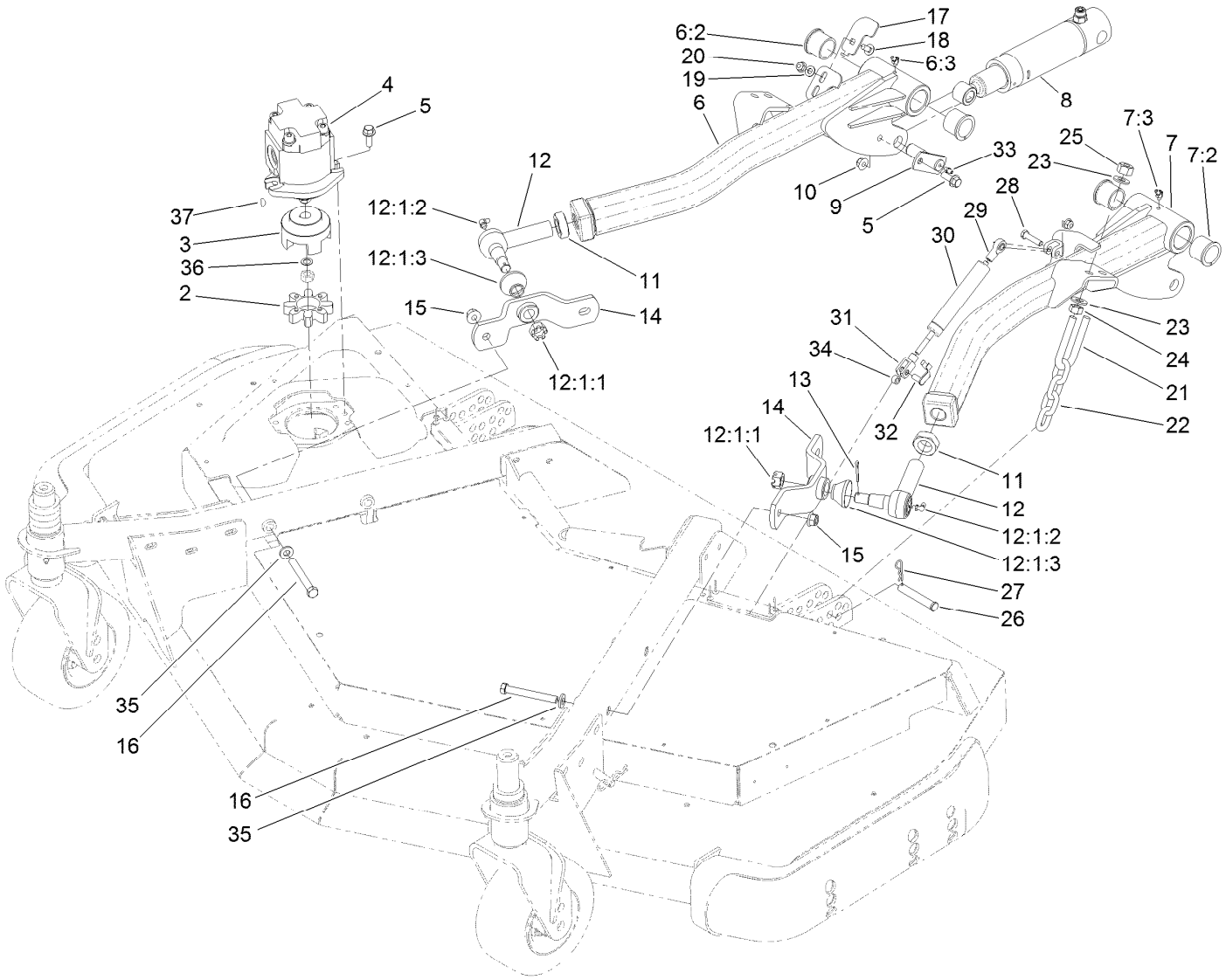

Front Deck Installation Assembly (continued)

Ref.	*Part Number*	*Qty.*	*Description*
36	112-6957	1	Washer-Hardened
37	3257-3	1	Key-Woodruff

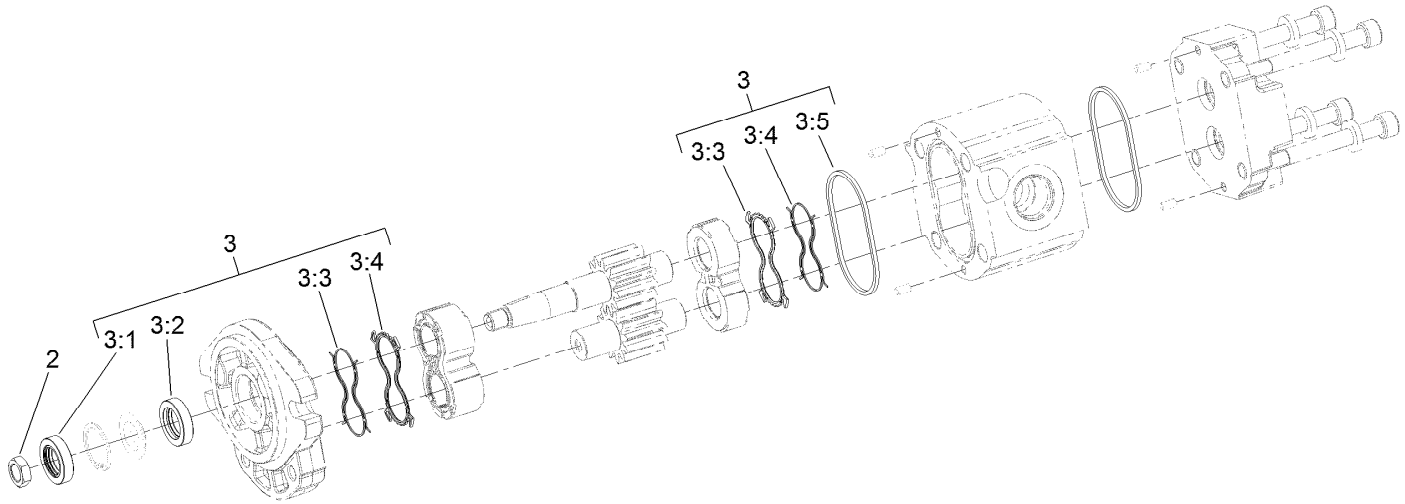

Hydraulic Motor Assembly No. 127-3694

Ref.	*Part Number*	*Qty.*	*Description*
2	110-8815	1	Nut-Hex
3	114-5620	1	Seal Kit
3:1		1	Seal-Shaft ●
3:2		1	Seal-Shaft ●
3:3		2	Seal-Anti Extrusion ●
3:4		2	Seal-Plate, Balancing ●
3:5		2	O Ring-Housing ●

● Not serviced separately

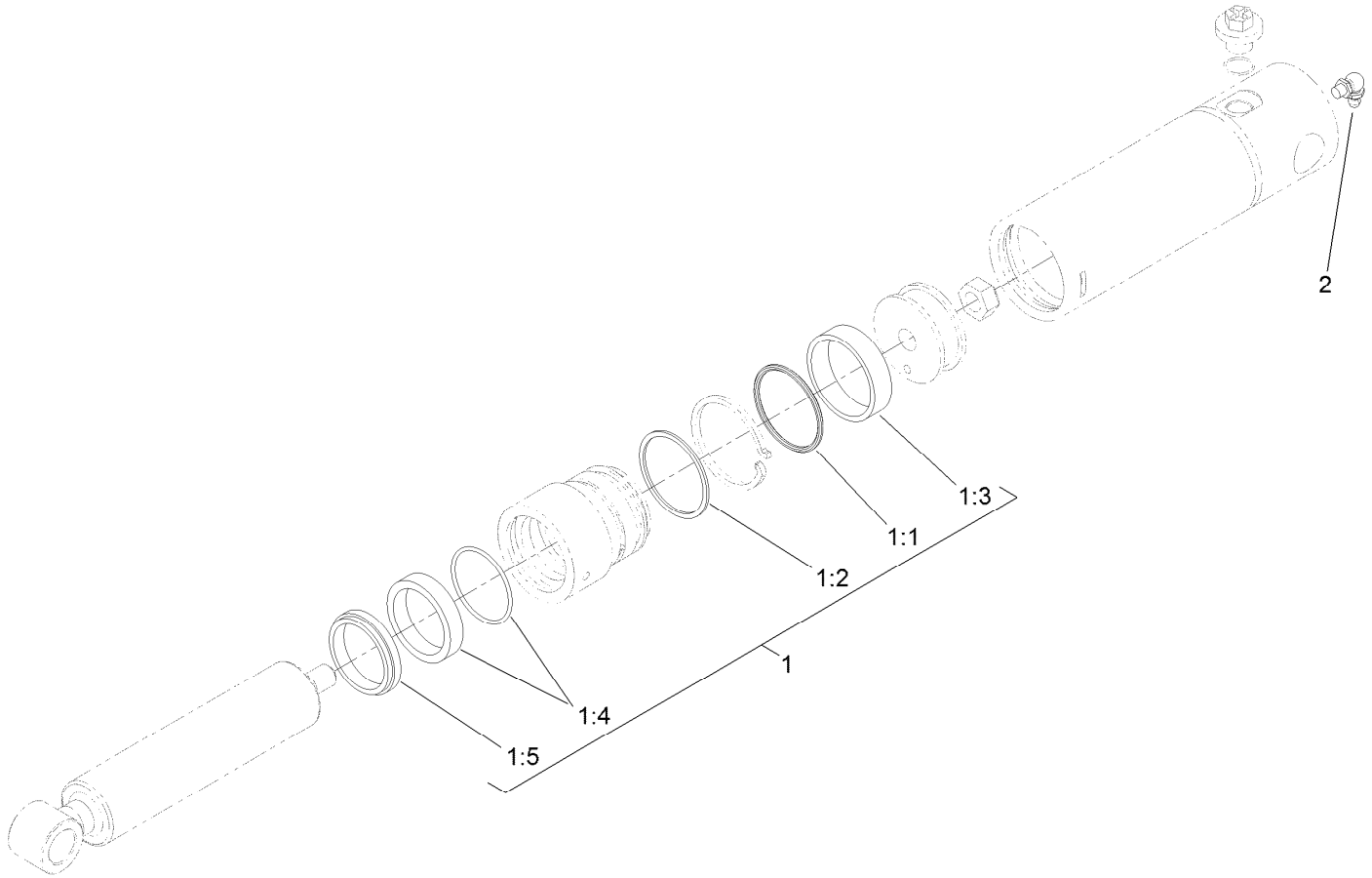

Lift Cylinder Assembly No. 120-8802

Ref.	*Part Number*	*Qty.*	*Description*
1	125-4301	1	Seal Kit
1:1		1	O-Ring ●
1:2		1	Backup ●
1:3		1	Wear Ring ●
1:4		1	Bds Seal ●
1:5		1	Dust Seal ●
2	302-60	1	Fitting-Grease

● Not serviced separately

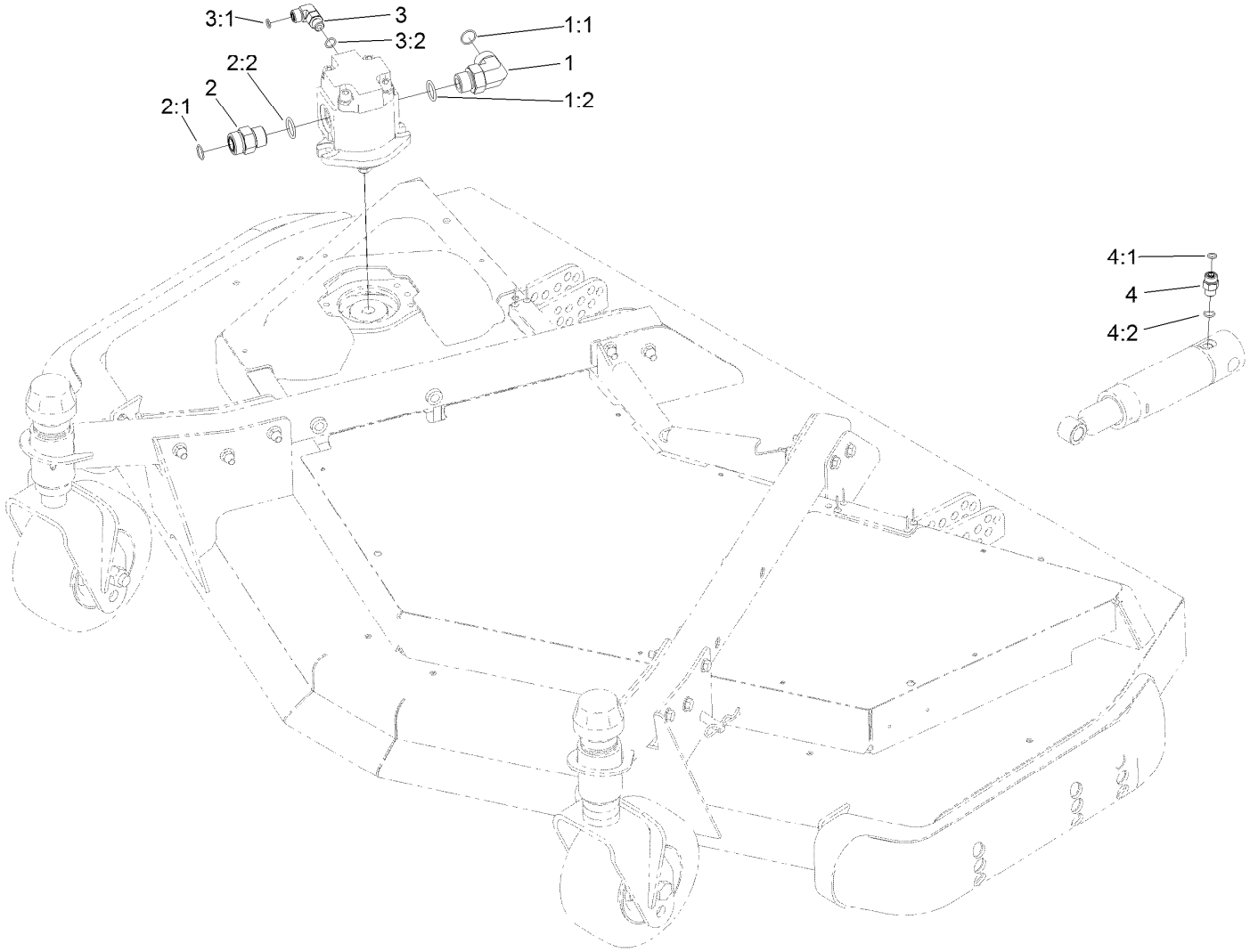

Front Deck Hydraulic Fitting Assembly

Ref.	*Part Number*	*Qty.*	*Description*
1	340-142	1	Fitting-Elbow, 90 DEG
1:1	237-58	1	O-Ring
1:2	237-81	1	O-Ring
2	340-9	1	Fitting-STR
2:1	237-58	1	O-Ring
2:2	237-81	1	O-Ring
3	340-77	1	Fitting-Elbow, 90 DEG
3:1	237-22	1	O-Ring
3:2	237-42	1	O-Ring
4	340-2	2	Fitting-Straight
4:1	237-22	1	O-Ring
4:2	237-42	1	O-Ring

Front Deck Hose Routing Assembly

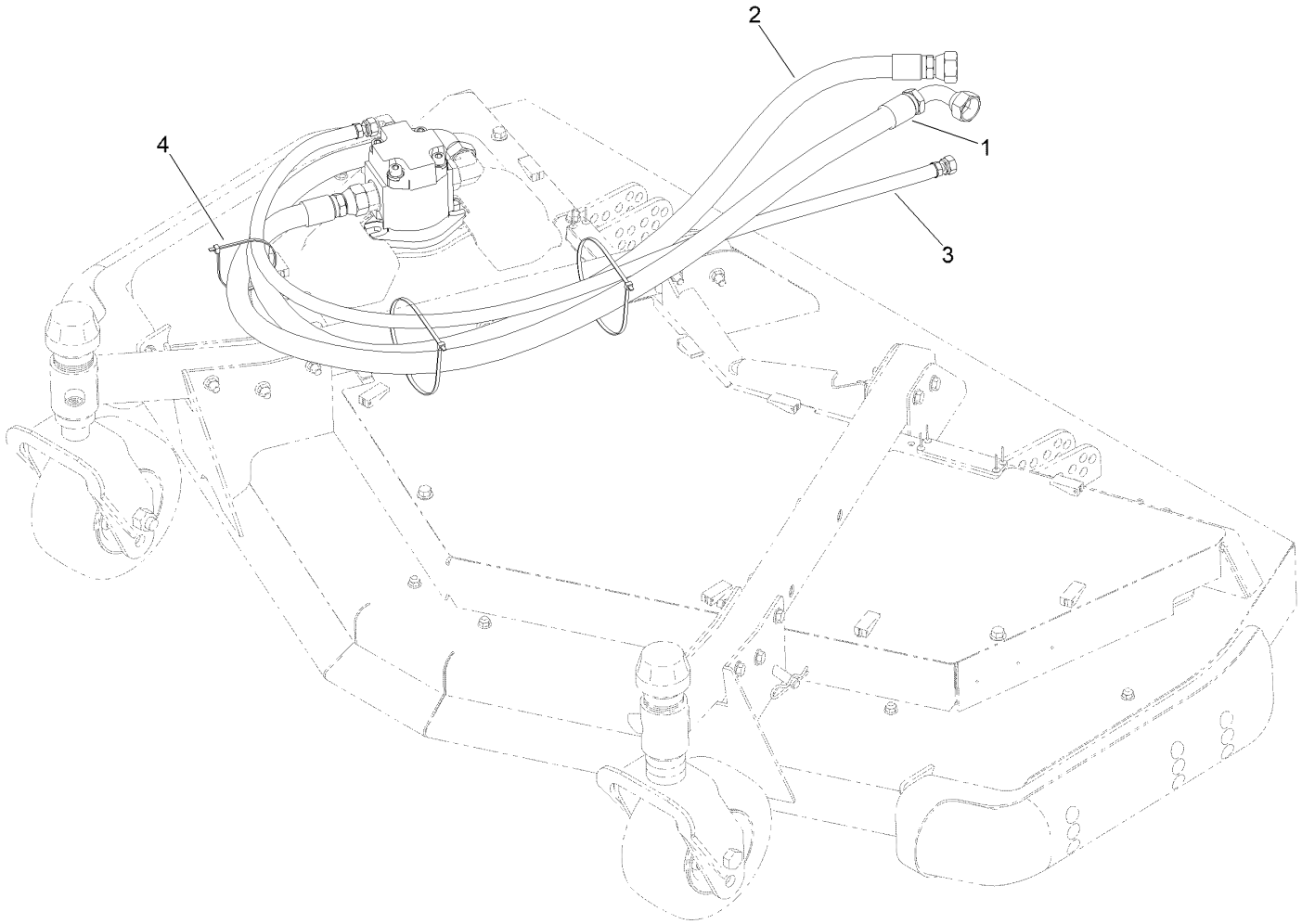

Front Deck Hose Routing Assembly (continued)

Ref.	Part Number	Qty.	Description
1	120-8987	1	Hose-HYD
2	120-8988	1	Hose-HYD
3	120-8989	1	Hose-HYD
4	3290-379	3	Tie-Cable

Front Deck Idler and Skid Assembly

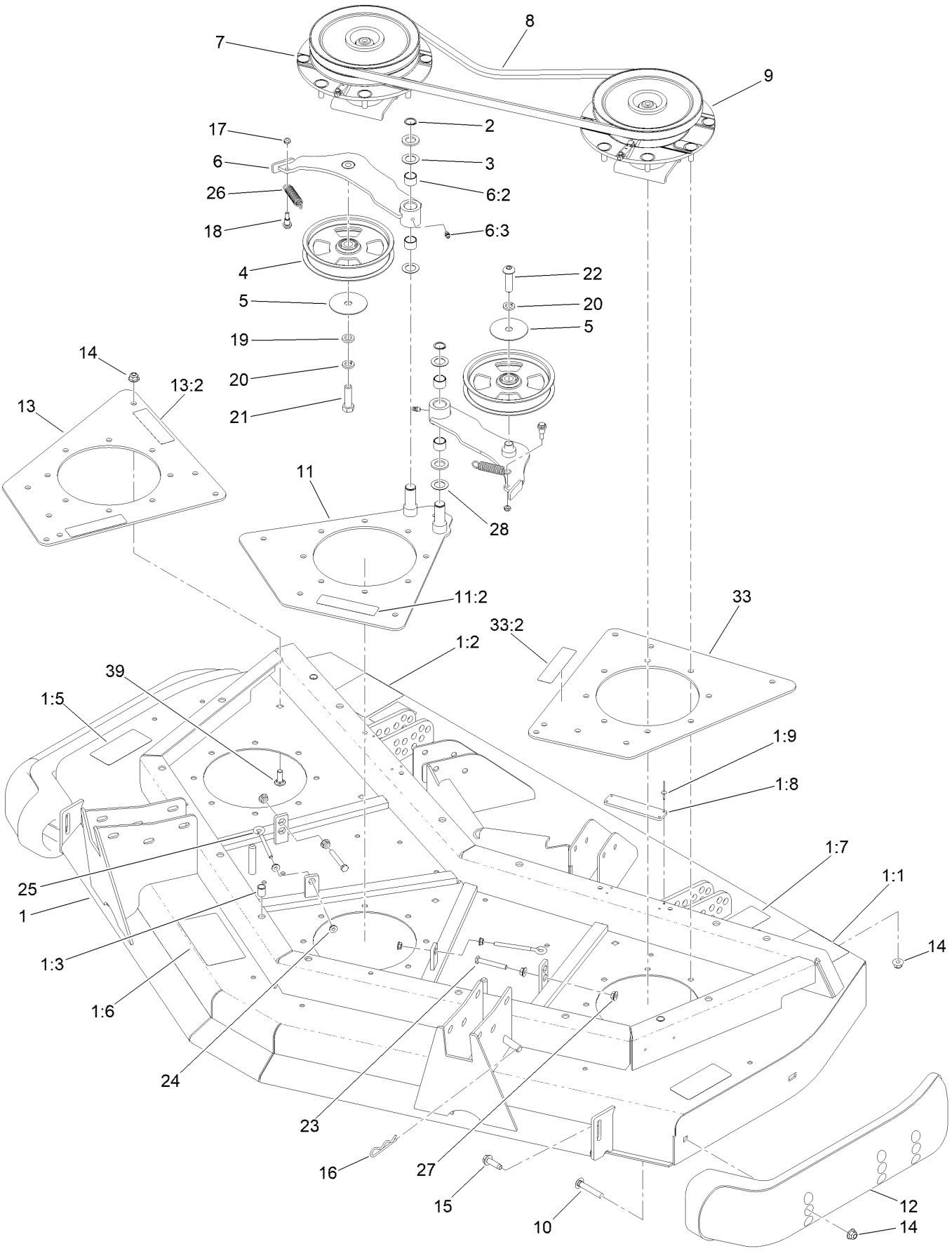

Front Deck Idler and Skid Assembly (continued)

Ref.	Part Number	Qty.	Description
1	131-1234	1	Front Deck ASM
1:1	120-6604	2	Decal-Danger
1:2	100-5624	1	Decal-HOC, RH
1:3	32148-9	3	Nut-Clinch
1:5	93-7818	2	Decal-Torque, Blade Bolt
1:6	100-5622	1	Decal-HOC
1:7	104-3578	1	Decal-HOC, LH
1:8	105-0786	2	Pad-Plastic
1:9	3269-8	8	Rivet-Blind
2	32120-72	2	Ring-Snap
3	3-6498	4	Washer-Thrust
4	132-9421	2	Pulley-Idler, Flat
5	100-3102	2	Washer-Flat
6	110-6128	2	Idler Arm ASM
6:2	256-76	2	Bushing
6:3	302-5	1	Fitting-Grease
7	119-4548	1	Double Driven Spindle ASM
8	108-8076	2	V-Belt, Deck
9	119-4549	1	High-Driven Spindle ASM
10	3231-33	4	Screw-CARR
11	131-1237	1	Plate-Spindle, Front Center
11:2	100-6578	1	Decal-Danger

Ref.	Part Number	Qty.	Description
12	112-1479	2	Skid-Bumper, Deck
13	131-1238	1	Plate-Spindle, Front Right
13:2	100-6578	2	Decal-Danger
14	104-8301	36	Nut-HF, NI
15	9136144	2	Screw-HWHTF
16	3290-355	1	Pin-Hair
17	3296-56	2	Nut-Lock, NI
18	104-0858	2	Bolt-Shoulder
19	9202424	1	Spacer
20	3253-7	2	Washer-Lock
21	325-7	1	Screw-HH
22	108-1993	1	Screw-HSBH
23	9114524	2	Bolt-TAP, HH
24	32128-14	4	Nut-HF
25	68-0090	2	Screw-Adjusting
26	107938	2	Spring-Extension
27	32128-26	4	Nut-HF
28	70-1160	2	Washer
33	131-1239	1	Plate-Spindle, Front Left
33:2	100-6578	1	Decal-Danger
39	3231-22	12	Screw-CARR

Double Driven Spindle Assembly No. 119-4548

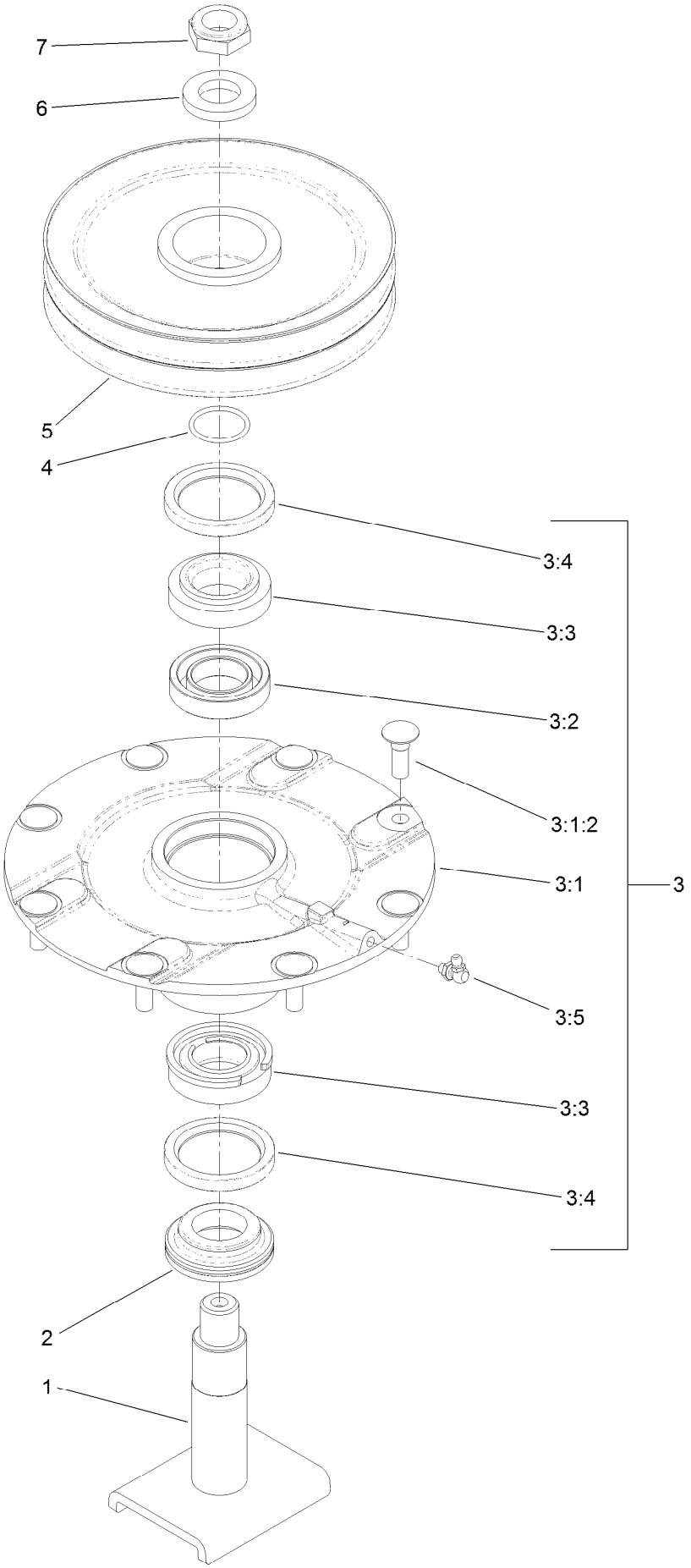

Double Driven Spindle Assembly No. 119-4548 (continued)

Ref.	Part Number	Qty.	Description
1	104-3554	1	Shaft-Spindle
2	69-6950	1	Spacer-Shaft, Spindle
3	119-4775	1	Spindle Housing ASM
3:1		1	Spindle ASM ●
3:1:2	114-8195	8	Bolt-Neck, Ribbed
3:2	120-5577	1	Bearing Spacer Set
3:3	110-8297	1	Bearing ASM
3:4	253-154	2	Seal-Oil
3:5	302-60	1	Fitting-Grease
4	106-7159	1	O-Ring
5	104-3547	1	Pulley-Driven, Double
6	120-5576	1	Washer-Hardened
7	3296-60	1	Nut-Lock, NI

● Not serviced separately

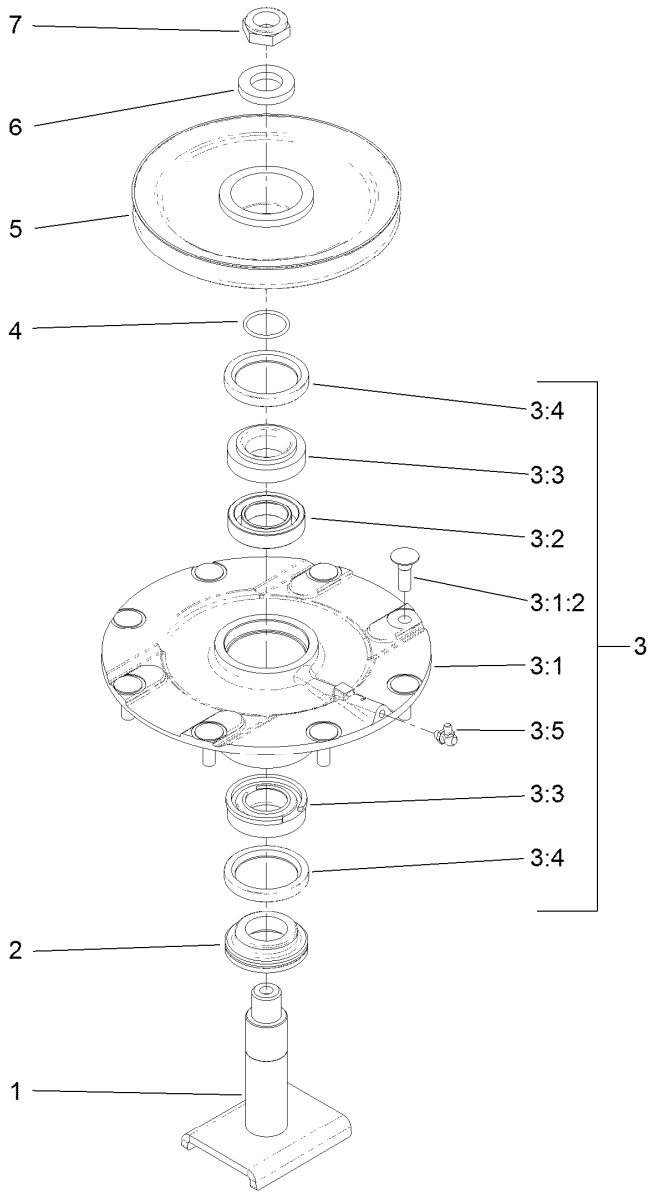

High Driven Spindle Assembly No. 119-4549

Ref.	Part Number	Qty.	Description
1	104-3554	1	Shaft-Spindle
2	69-6950	1	Spacer-Shaft, Spindle
3	119-4775	1	Spindle Housing ASM
3:1		1	Spindle ASM ●
3:1:2	114-8195	8	Bolt-Neck, Ribbed
3:2	120-5577	1	Bearing Spacer Set
3:3	110-8297	1	Bearing ASM
3:4	253-154	2	Seal-Oil
3:5	302-60	1	Fitting-Grease
4	106-7159	1	O-Ring
5	104-3548	1	Pulley-Driven, High
6	120-5576	1	Washer-Hardened
7	3296-60	1	Nut-Lock, NI

● Not serviced separately

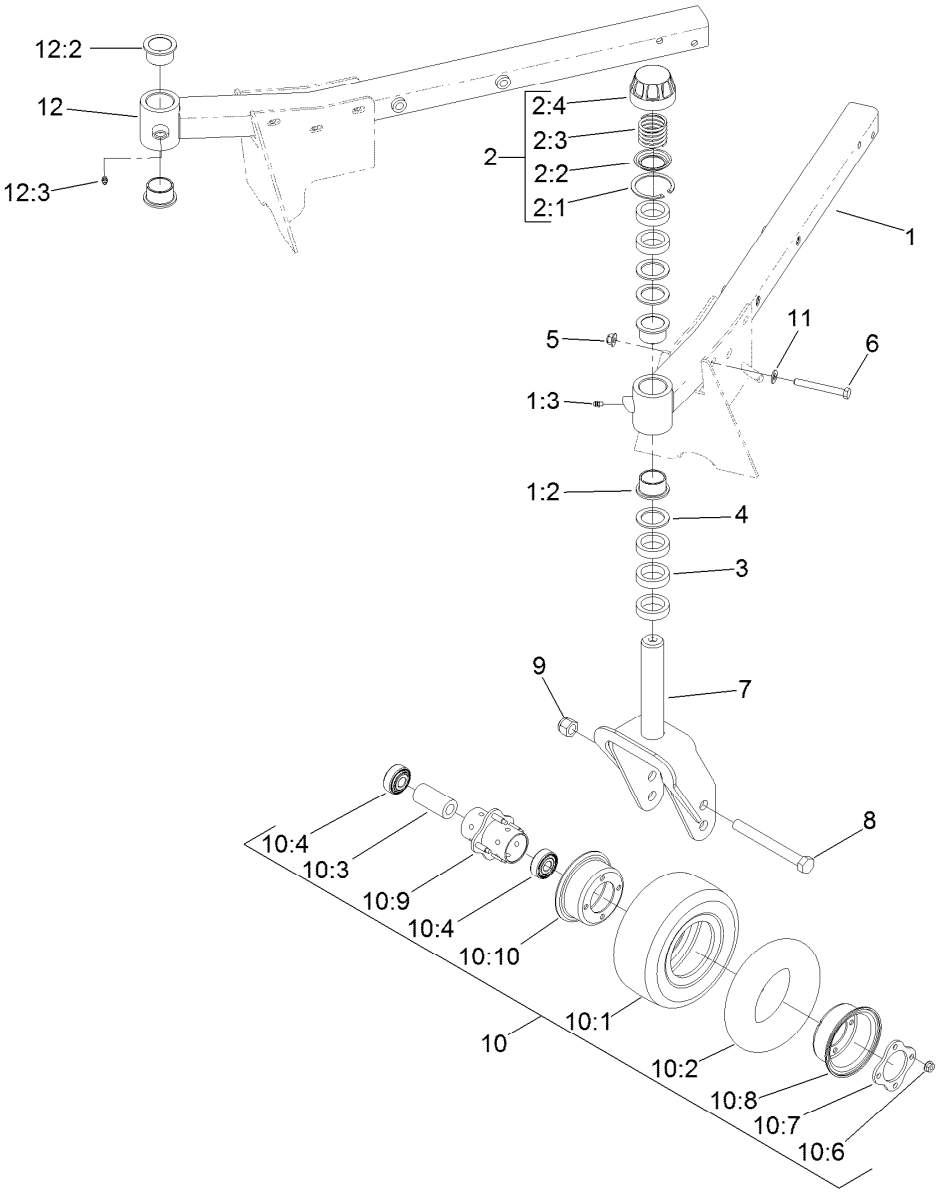

Front Deck Caster Arm and Wheel Assembly

Ref.	Part Number	Qty.	Description
1	132-6169	1	LH Caster Arm ASM
1:2	69-6470	2	Bushing-Caster
1:3	302-5	1	Fitting-Grease
2	92-9727	2	HOC Cap ASM
2:1	92-5581	1	Ring-Rtng,Snap,Int,Flat
2:2	92-5583	1	Washer-Cap
2:3	92-9726	1	Spring-Compression
2:4	92-8861	1	Cap-HOC
3	69-1510	10	Spacer
4	69-6860	6	Washer-Thrust
5	104-8301	10	Nut-HF, NI
6	323-20	10	Screw-HH
7	130-2736-01	2	Fork-Caster
8	327-24	2	Screw-HH
9	3296-53	2	Nut-Lock, NI
10	93-5974	2	8 Inch Foam Filled Wheel ASM ●

Ref.	Part Number	Qty.	Description
10	93-9938	2	Wheel ASM
10:1	93-9939	1	Tire
10:2	68-8950	1	Tube-Inner (W/Valve)
10:3	93-4241	1	Spacer-Bearing, Inner
10:4	120-3366	2	Bearing
10:6	32128-16	4	Nut-HHF
10:7	93-4242	1	Plate
10:8	93-4239	1	Rim-Wheel, Half
10:9	93-5980	1	Hub
10:10	95-2741	1	Rim-Wheel, Half
11	3256-24	10	Washer-Plain
12	132-6176	1	RH Caster Arm ASM
12:2	69-6470	2	Bushing-Caster
12:3	302-5	1	Fitting-Grease

● Optional Equipment

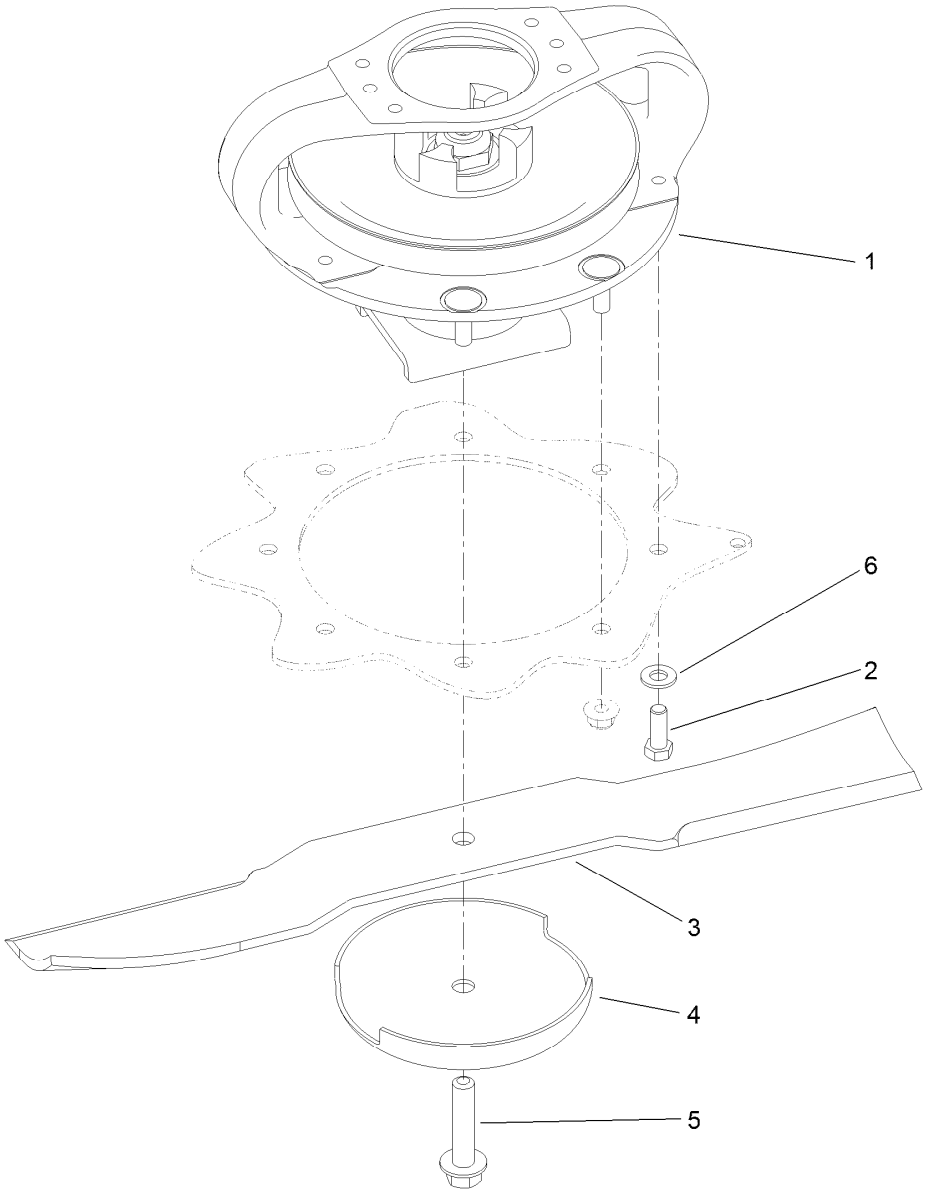

Driving Spindle Assembly

Ref.	Part Number	Qty.	Description
1	119-4547	1	Driving Spindle ASM
2	323-6	4	Screw-HH
3	92-5608-03	3	Blade
4	72-9361	3	Cup-Scalp, Anti
5	92-5816	3	Bolt-Blade
6	3256-24	4	Washer-Plain

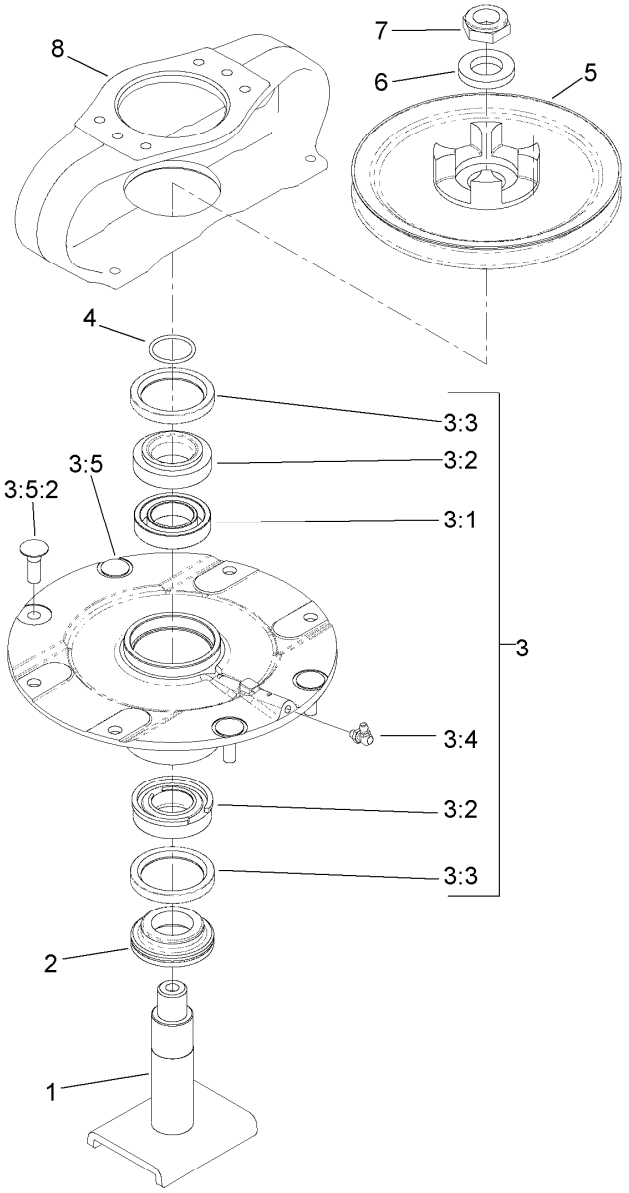

Driving Spindle Assembly No. 119-4547

Ref.	Part Number	Qty.	Description
1	104-3554	1	Shaft-Spindle
2	69-6950	1	Spacer-Shaft, Spindle
3	119-4546	1	Spindle Housing ASM
3:1	120-5577	1	Bearing Spacer Set
3:2	110-8297	1	Bearing ASM
3:3	253-154	2	Seal-Oil
3:4	302-60	1	Fitting-Grease
3:5		1	Spindle ASM ●
3:5:2	114-8195	4	Bolt-Neck, Ribbed
4	106-7159	1	O-Ring
5	104-3545	1	Pulley-Driving
6	120-5576	1	Washer-Hardened
7	3296-60	1	Nut-Lock, NI
8	104-3544	1	Mount-Motor, Drive

● Not serviced separately

Cutting Chamber, Cover and Roller Assembly

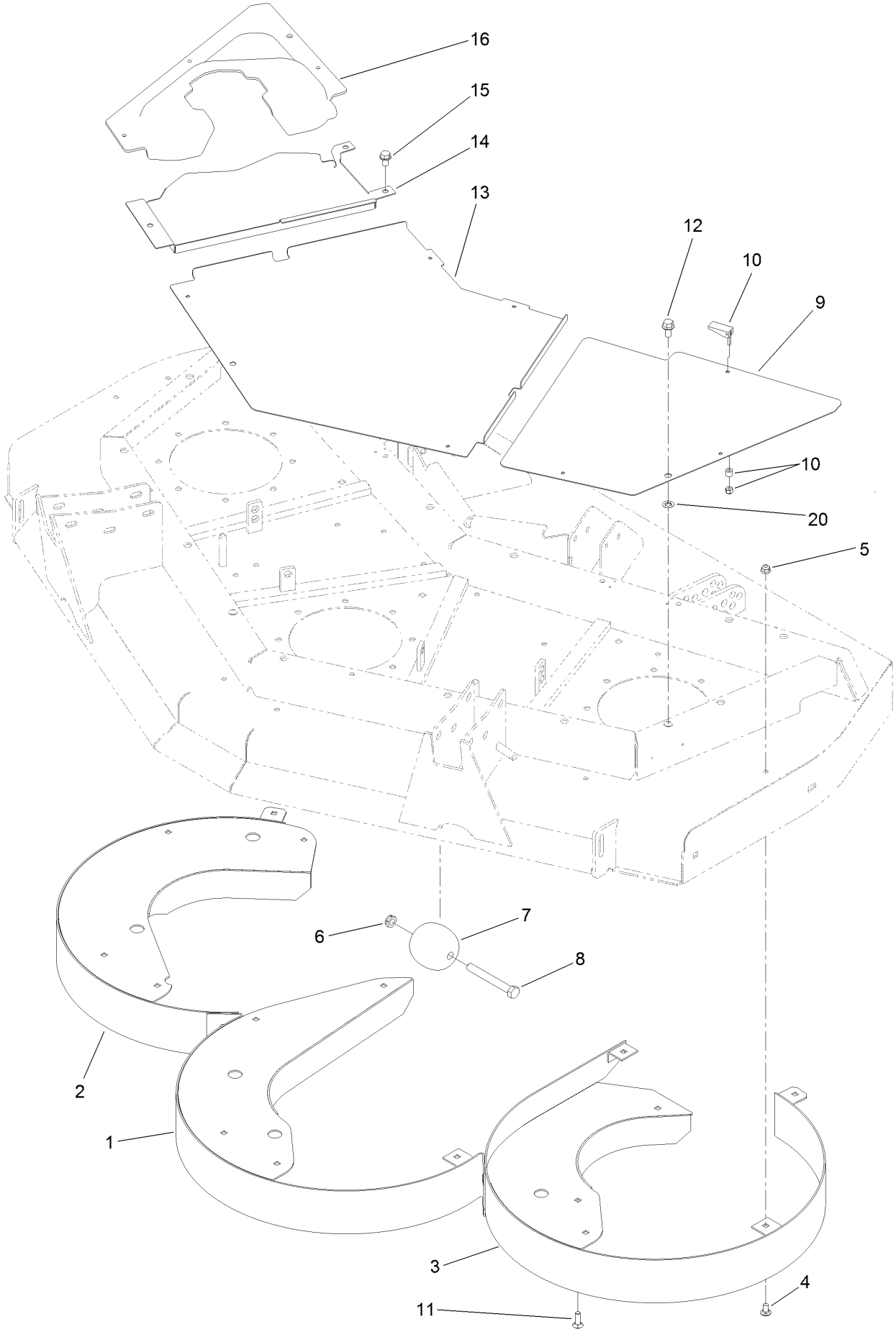

Cutting Chamber, Cover and Roller Assembly (continued)

Ref.	Part Number	Qty.	Description
1	130-2650-01	1	Chamber-Center
2	130-2674-01	1	Chamber-RH
3	130-2675-01	1	Chamber-LH
4	3230-18	15	Screw-CARR
5	104-8300	18	Nut-HF, NI
6	3296-45	2	Nut-Hex
7	29-4820	2	Roller
8	325-17	2	Screw-HH
9	100-5663-03	1	Cover-Front, LH
10	74-5950	10	Latch-Swell
11	3230-22	3	Screw-CARR
12	3234-1	3	Screw-HHF
13	100-5660-03	1	Cover-Front, Center
14	100-5662-03	1	Cover-Front, RH
15	32144-69	3	Screw-HWHTF
16	100-5661	1	Cover-Front, Center
20	107-3154	3	Nut-Push

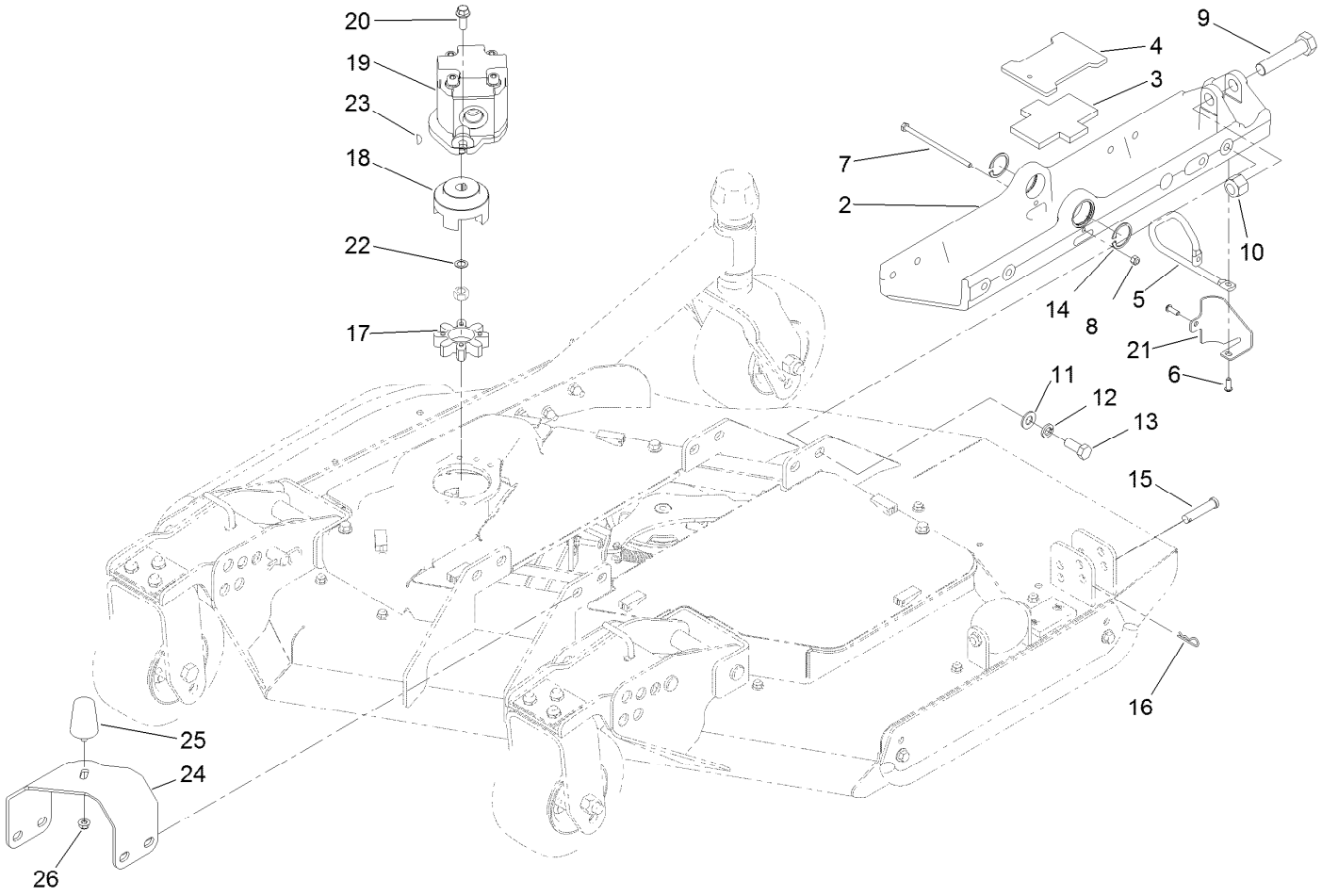

Right Deck Mount Assembly

Ref.	Part Number	Qty.	Description
2	107-4348-03	1	Mount-Deck, RH
3	104-8348	1	Plate-Rubber
4	108-1528-03	1	Plate
5	108-1529	1	Support-Hose
6	3274-69	2	Screw-HSBH
7	321-47	1	Screw-HH
8	3296-42	1	Nut-Lock, NI
9	328-5	1	Screw-HH
10	3296-51	1	Nut-Lock, NI
11	3256-26	8	Washer-Flat
12	3253-7	8	Washer-Lock
13	325-5	8	Screw-HH
14	32120-42	2	Ring-Retaining

Ref.	Part Number	Qty.	Description
15	92-2739	1	Pin-Clevis
16	3290-467	1	Pin-Hair
17	104-3542	1	Spider
18	104-3541	1	Hub-Spider
19	127-3694	1	HYD Motor ASM
20	3234-42	2	Screw-HHF
21	120-0480-03	1	Guide-Hose, RH
22	112-6957	1	Washer-Hardened
23	3257-3	1	Key-Woodruff
24	130-5966-03	1	Bracket-Bumper, RH
25	110-5070	1	Bumper
26	104-8300	1	Nut-HF, NI

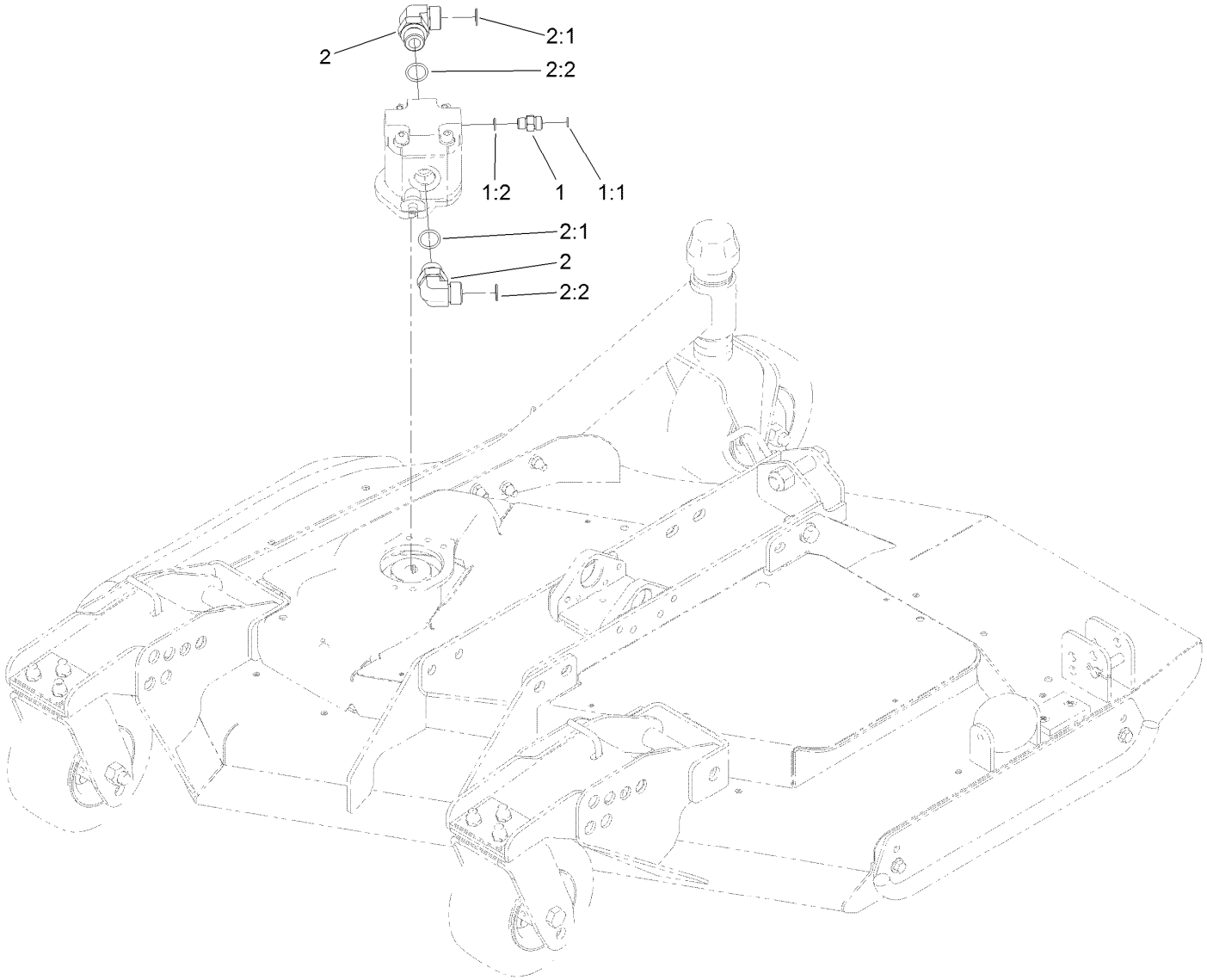

Right Deck Hydraulic Fitting Assembly

Ref.	*Part Number*	*Qty.*	*Description*
1	340-2	1	Fitting-Straight
1:1	237-22	1	O-Ring
1:2	237-42	1	O-Ring
2	340-142	2	Fitting-Elbow, 90 DEG
2:1	237-58	1	O-Ring
2:2	237-81	1	O-Ring

Right Deck Hose Assembly

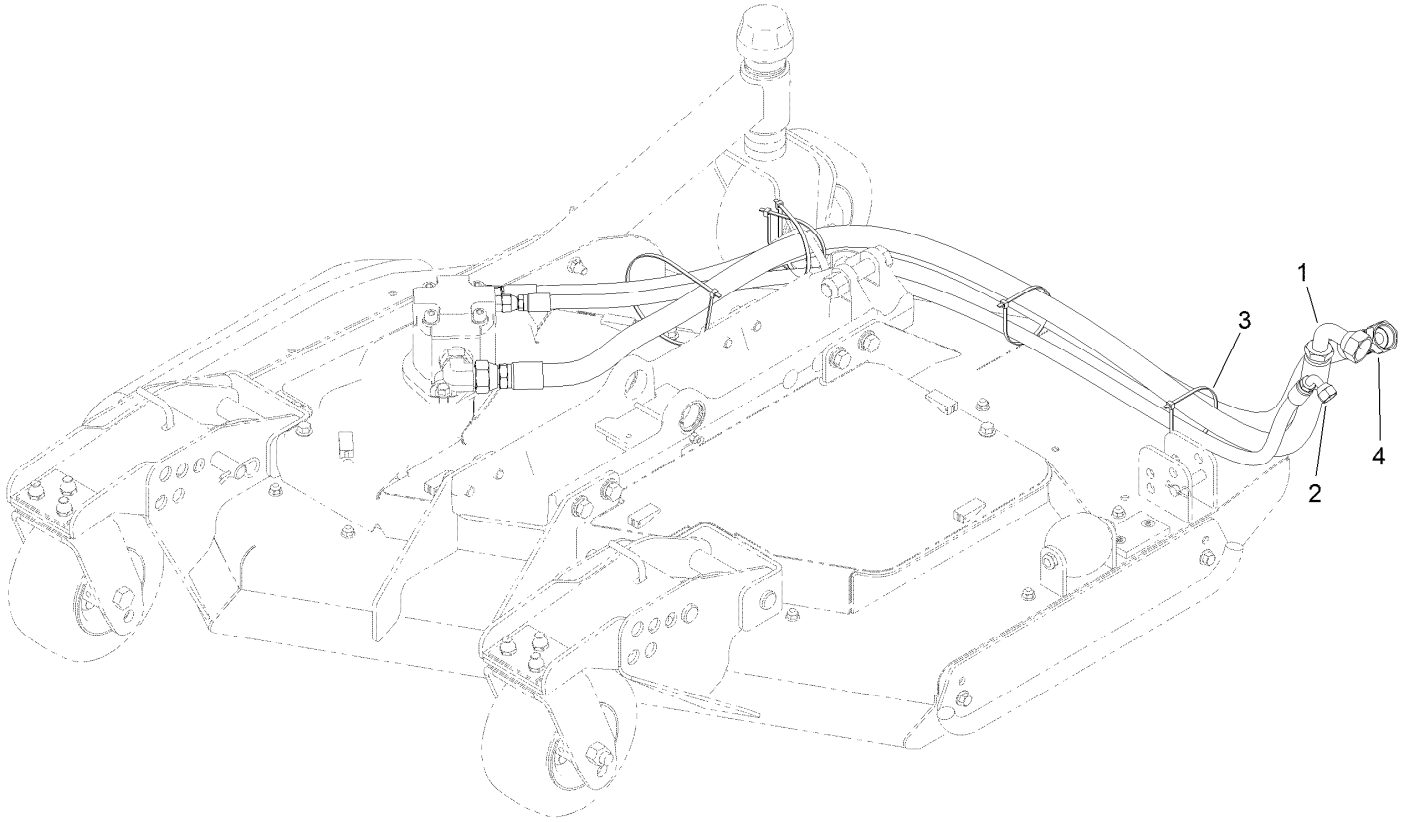

Right Deck Hose Assembly (continued)

Ref.	Part Number	Qty.	Description
1	120-8959	1	Hose-HYD
2	104-2265	1	Hose-HYD
3	3290-379	5	Tie-Cable
4	132-6116	1	Hose-HYD

Right Deck, Idler and Skid Assembly

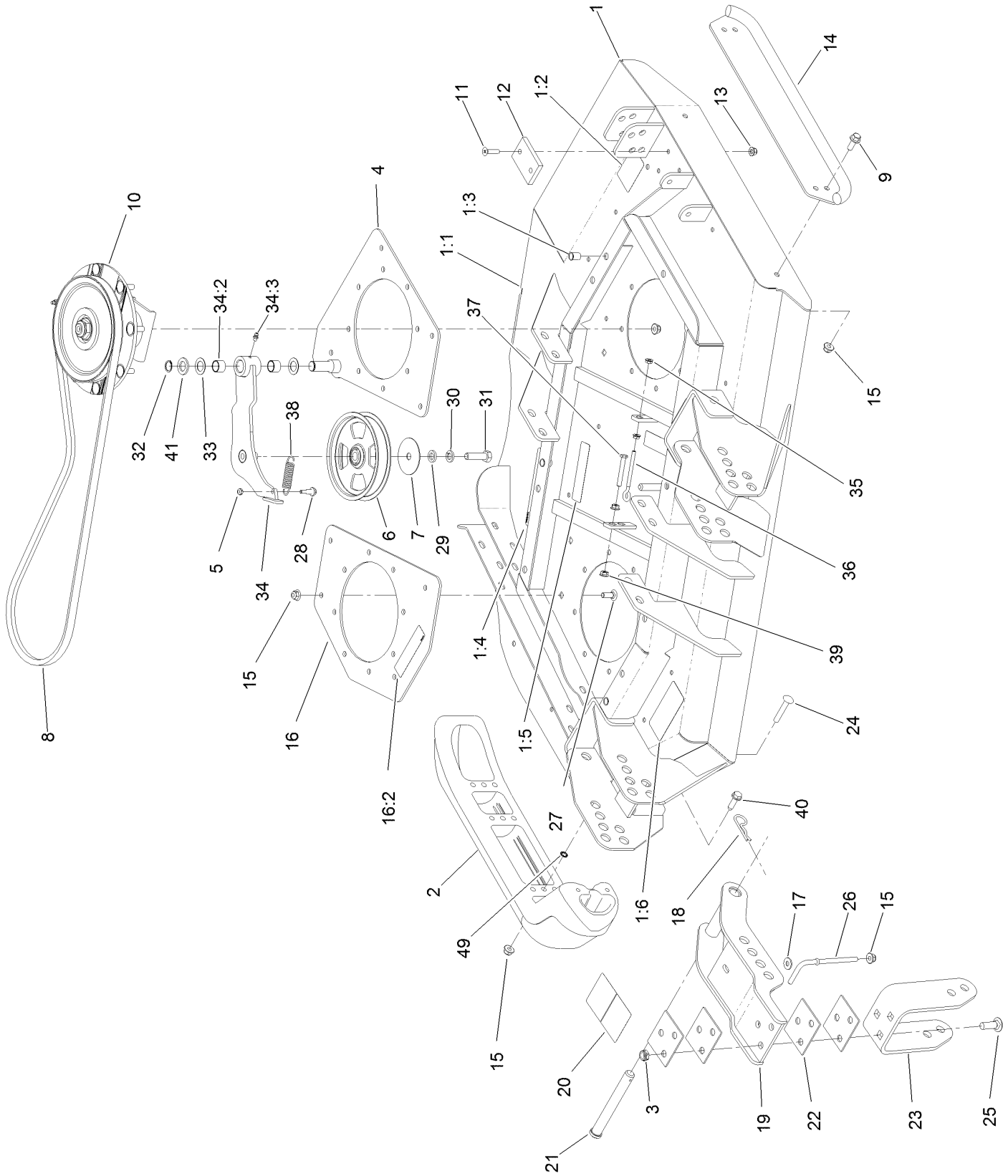

Right Deck, Idler and Skid Assembly (continued)

Ref.	Part Number	Qty.	Description
1	131-1235	1	Right Deck ASM
1:1	120-6604	1	Decal-Danger
1:2	100-5694	1	Decal-Rear HOC, RH
1:3	32148-9	3	Nut-Clinch
1:4	100-5622	1	Decal-HOC
1:5	100-6578	2	Decal-Danger
1:6	93-7818	1	Decal-Torque, Blade Bolt
2	112-1479	1	Skid-Bumper, Deck
3	3296-45	6	Nut-Hex
4	131-1231-01	1	Plate-Stiffener
5	3296-56	1	Nut-Lock, NI
6	132-9421	1	Pulley-Idler, Flat
7	100-3102	1	Washer-Flat
8	108-8076	1	V-Belt, Deck
9	3234-42	2	Screw-HHF
10	119-4776	1	Low-Driven Spindle ASM
11	32108-103	2	Screw-FH
12	69-9290	1	Pad-Bumper
13	104-8300	2	Nut-HF, NI
14	104-2250-01	1	Skid-Side
15	104-8301	26	Nut-HF, NI
16	131-1243	1	Plate-Spindle
16:2	100-6578	1	Decal-Danger
17	3256-3	2	Washer-Flat
18	3290-343	4	Pin-Hair
19	132-6150-01	2	Bracket-Caster
20	100-5623	1	Decal-HOC
21	120-5587	4	Pin-Clevis
22	104-7524	8	Shim
23	132-6157-01	2	Bracket-Fork
24	3231-33	2	Screw-CARR
25	3233-2	6	Screw-CARR
26	106-2047	2	Rod-Tension
27	3231-22	8	Screw-CARR
28	104-0858	1	Bolt-Shoulder
29	9202424	1	Spacer
30	3253-7	1	Washer-Lock
31	325-7	1	Screw-HH
32	32120-72	1	Ring-Snap
33	3-6498	2	Washer-Thrust
34	110-6128	1	Idler Arm ASM
34:2	256-76	2	Bushing
34:3	302-5	1	Fitting-Grease
35	32128-14	2	Nut-HF
36	68-0090	1	Screw-Adjusting
37	9114524	1	Bolt-TAP, HH
38	107938	1	Spring-Extension
39	32128-26	2	Nut-HF
40	9136144	1	Screw-HWHTF
41	70-1160	1	Washer
49	32151-72	2	Ring-Retaining

Low Driven Spindle Assembly No. 119-4776

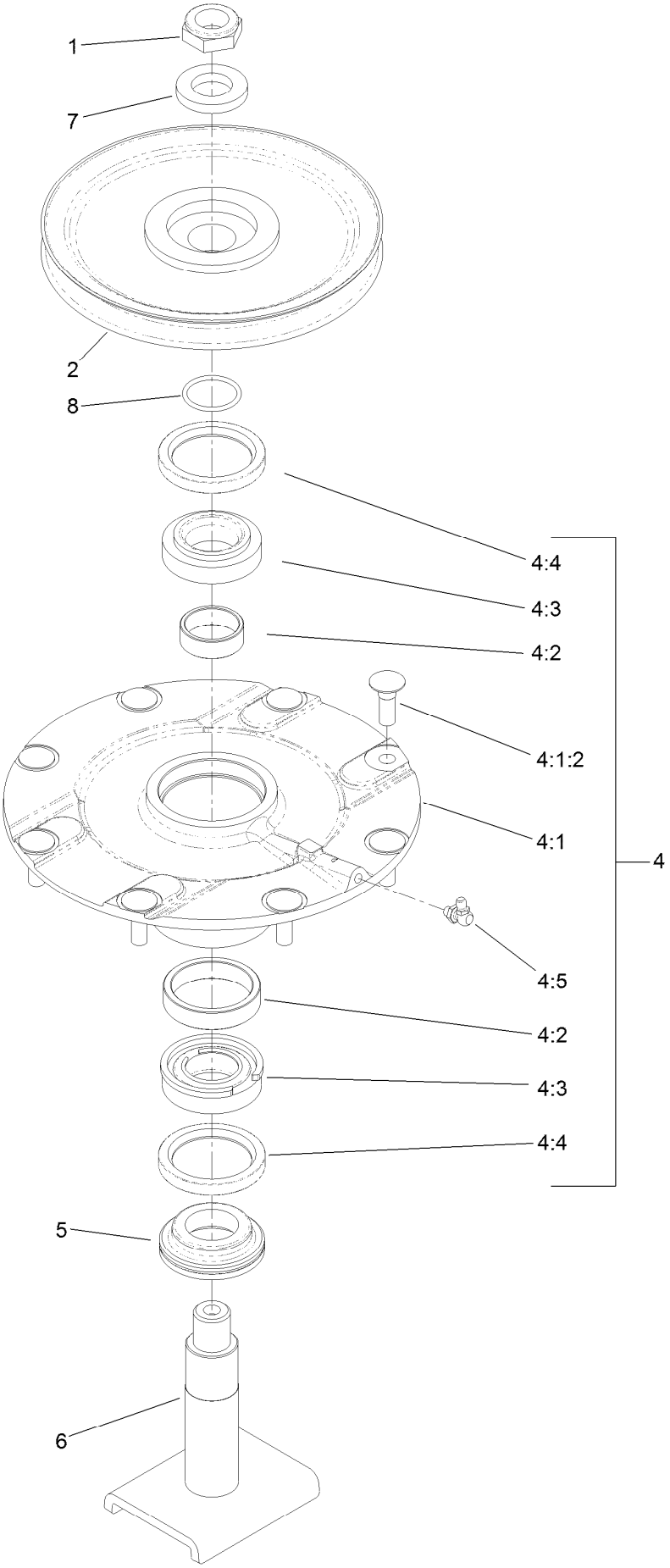

Low Driven Spindle Assembly No. 119-4776 (continued)

Ref.	Part Number	Qty.	Description
1	3296-60	1	Nut-Lock, NI
2	104-3546	1	Pulley-Driven, Low
4	119-4775	1	Spindle Housing ASM
4:1		1	Spindle ASM ●
4:1:2	114-8195	8	Bolt-Neck, Ribbed
4:2	120-5577	1	Bearing Spacer Set
4:3	110-8297	1	Bearing ASM
4:4	253-154	2	Seal-Oil
4:5	302-60	1	Fitting-Grease
5	69-6950	1	Spacer-Shaft, Spindle
6	104-3554	1	Shaft-Spindle
7	120-5576	1	Washer-Hardened
8	106-7159	1	O-Ring

● Not serviced separately

Right Hand and Left Hand Castor Arm and Wheel Assembly

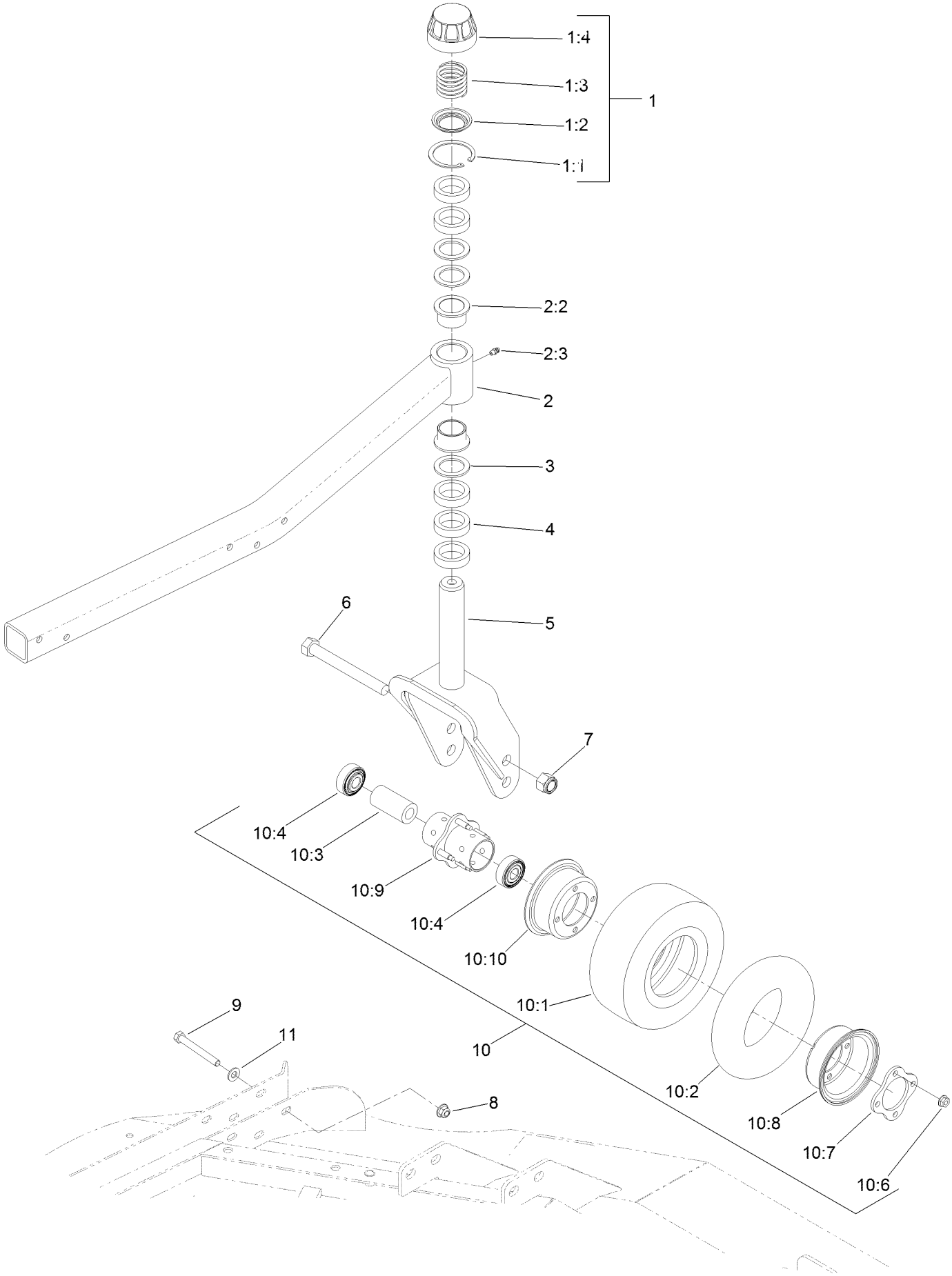

Right Hand and Left Hand Castor Arm and Wheel Assembly (continued)

Ref.	Part Number	Qty.	Description
1	92-9727	1	HOC Cap ASM
1:1	92-5581	1	Ring-Rtng,Snap,Int,Flat
1:2	92-5583	1	Washer-Cap
1:3	92-9726	1	Spring-Compression
1:4	92-8861	1	Cap-HOC
2	132-6167	1	Caster Arm ASM
2:2	69-6470	2	Bushing-Caster
2:3	302-5	1	Fitting-Grease
3	69-6860	3	Washer-Thrust
4	69-1510	5	Spacer
5	130-2736-01	1	Fork-Caster
6	327-24	3	Screw-HH
7	3296-53	3	Nut-Lock, NI
8	104-8301	5	Nut-HF, NI
9	323-20	5	Screw-HH
10	93-5974	3	8 Inch Foam Filled Wheel ASM ●
10	93-9938	3	Wheel ASM
10:1	93-9939	1	Tire
10:2	68-8950	1	Tube-Inner (W/Valve)
10:3	93-4241	1	Spacer-Bearing, Inner
10:4	120-3366	2	Bearing
10:6	32128-16	4	Nut-HHF
10:7	93-4242	1	Plate
10:8	93-4239	1	Rim-Wheel, Half
10:9	93-5980	1	Hub
10:10	95-2741	1	Rim-Wheel, Half
11	3256-24	5	Washer-Plain

● Optional Equipment

Right Deck Discharge Chamber and Cover Assembly

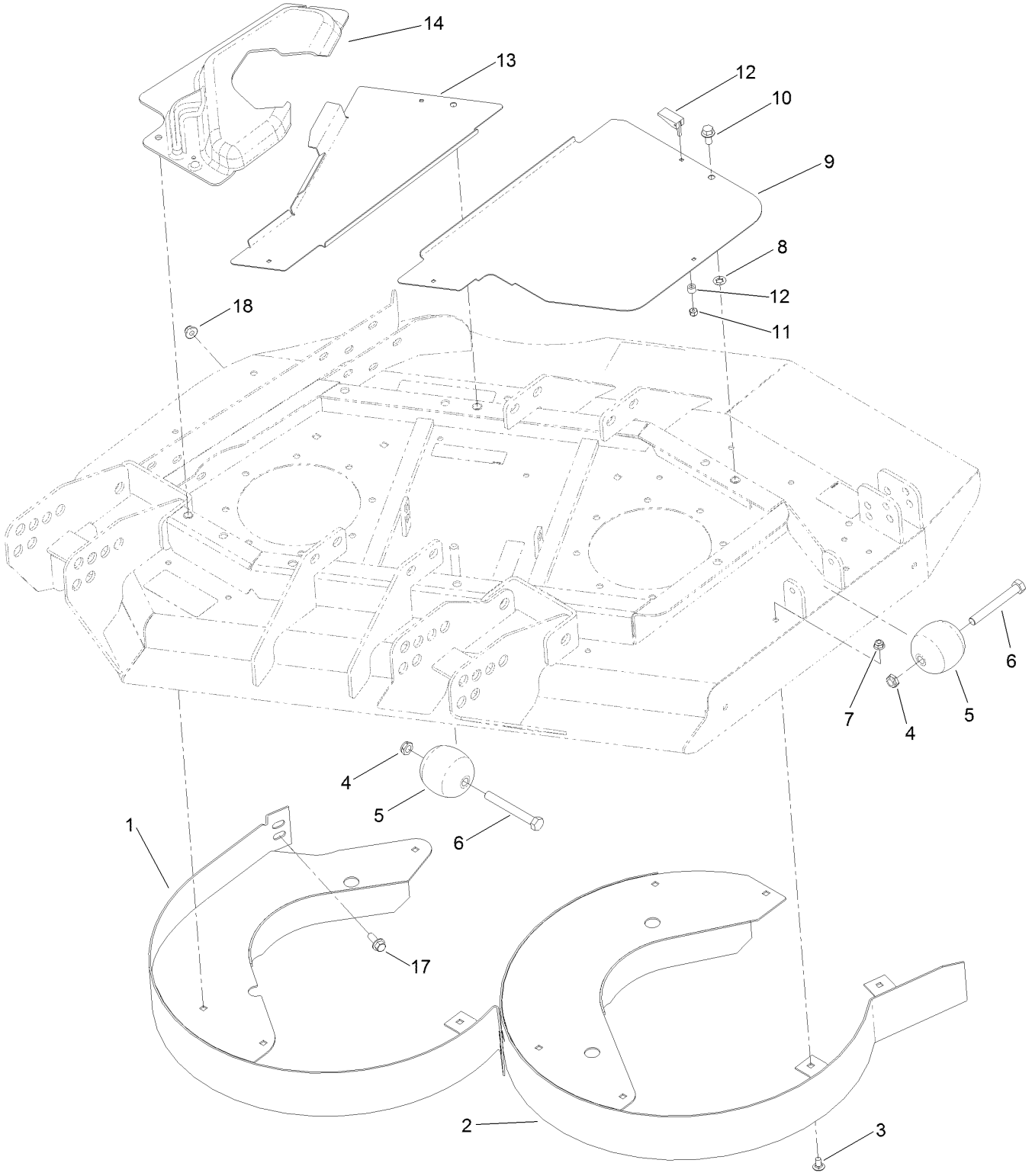

Right Deck Discharge Chamber and Cover Assembly (continued)

Ref.	Part Number	Qty.	Description
1	130-2680-01	1	Chamber-Outer
2	130-2681-01	1	Chamber-Inner
3	3230-18	11	Screw-CARR
4	3296-45	2	Nut-Hex
5	29-4820	2	Roller
6	325-17	2	Screw-HH
7	104-8300	11	Nut-HF, NI
8	107-3154	3	Nut-Push
9	100-5668-03	1	Plate-Cover, RH Side
10	3234-1	3	Screw-HHF
11	1-804254	7	Nut-Lock, HH
12	74-5950	7	Latch-Swell
13	100-5665-03	1	Plate-Cover, RH
14	100-5666	1	Cover-Motor, RH Deck
17	3234-42	1	Screw-HHF
18	104-8301	1	Nut-HF, NI

LH and RH Deck Driving Spindle Assembly

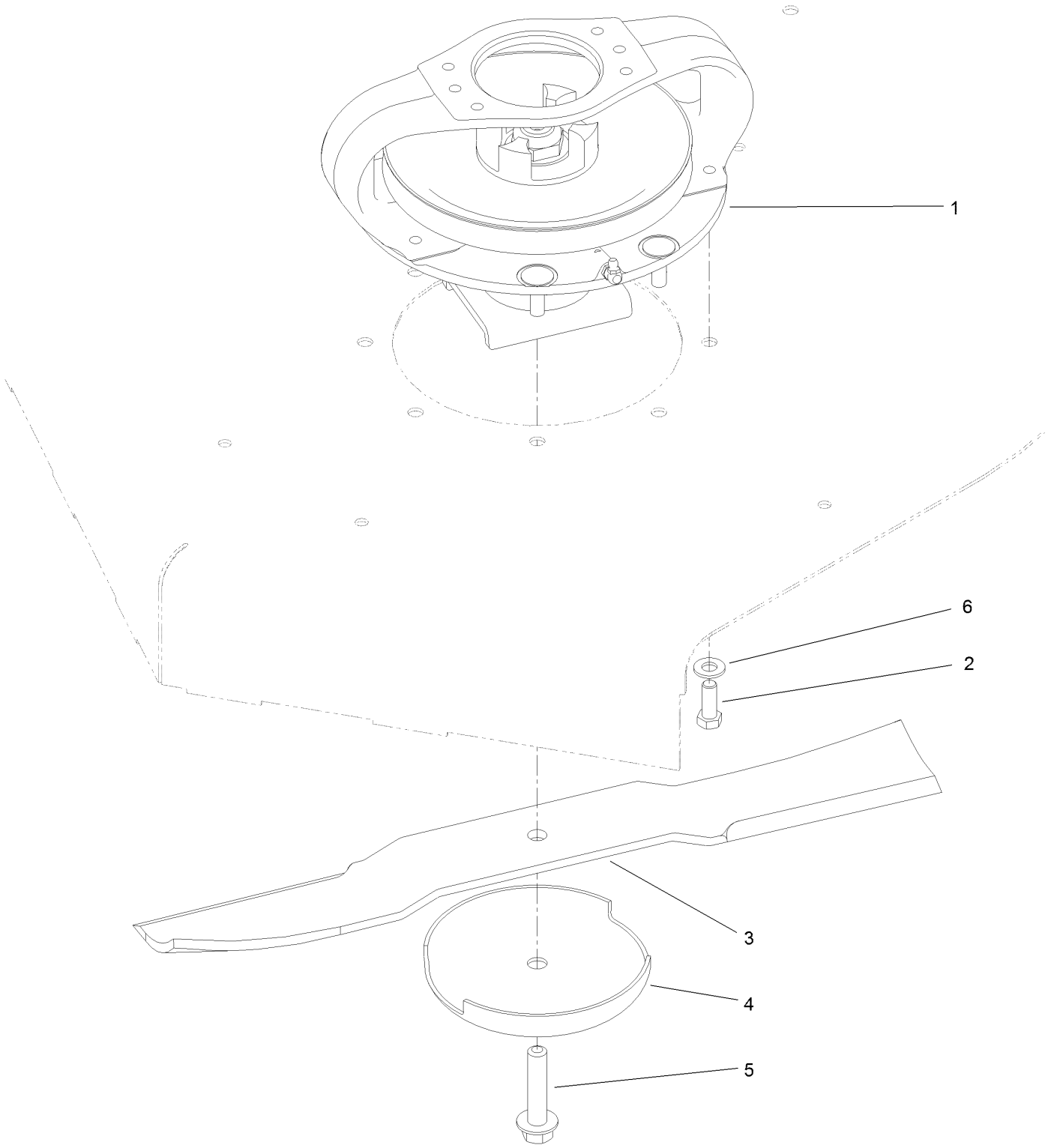

LH and RH Deck Driving Spindle Assembly (continued)

Ref.	Part Number	Qty.	Description
1	119-4547	1	Driving Spindle ASM
2	323-6	4	Screw-HH
3	92-5608-03	2	Blade
4	72-9361	2	Cup-Scalp, Anti
5	92-5816	2	Bolt-Blade
6	3256-24	4	Washer-Plain

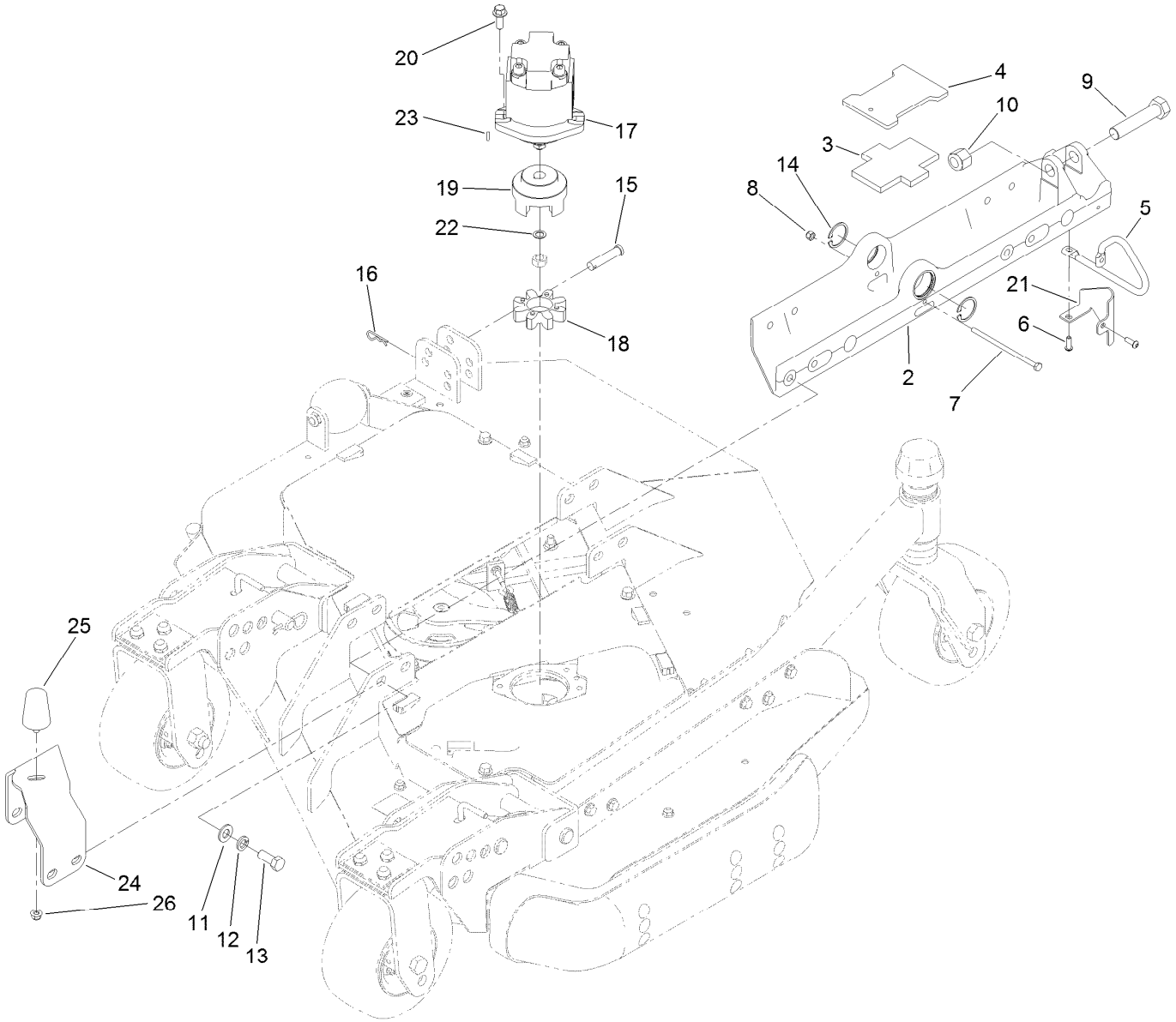

Left Deck Mount Assembly

Ref.	Part Number	Qty.	Description
2	107-4349-03	1	Mount-Deck, LH
3	104-8348	1	Plate-Rubber
4	108-1528-03	1	Plate
5	108-1529	1	Support-Hose
6	3274-69	2	Screw-HSBH
7	321-47	1	Screw-HH
8	3296-42	1	Nut-Lock, NI
9	328-5	1	Screw-HH
10	3296-51	1	Nut-Lock, NI
11	3256-26	8	Washer-Flat
12	3253-7	8	Washer-Lock
13	325-5	8	Screw-HH
14	32120-42	2	Ring-Retaining

Ref.	Part Number	Qty.	Description
15	92-2739	1	Pin-Clevis
16	3290-467	1	Pin-Hair
17	127-3694	1	HYD Motor ASM
18	104-3542	1	Spider
19	104-3541	1	Hub-Spider
20	3234-42	2	Screw-HHF
21	120-0481-03	1	Guide-Hose, LH
22	112-6957	1	Washer-Hardened
23	3257-3	1	Key-Woodruff
24	130-5965-03	1	Bracket-Bumper, LH
25	110-5070	1	Bumper
26	104-8300	1	Nut-HF, NI

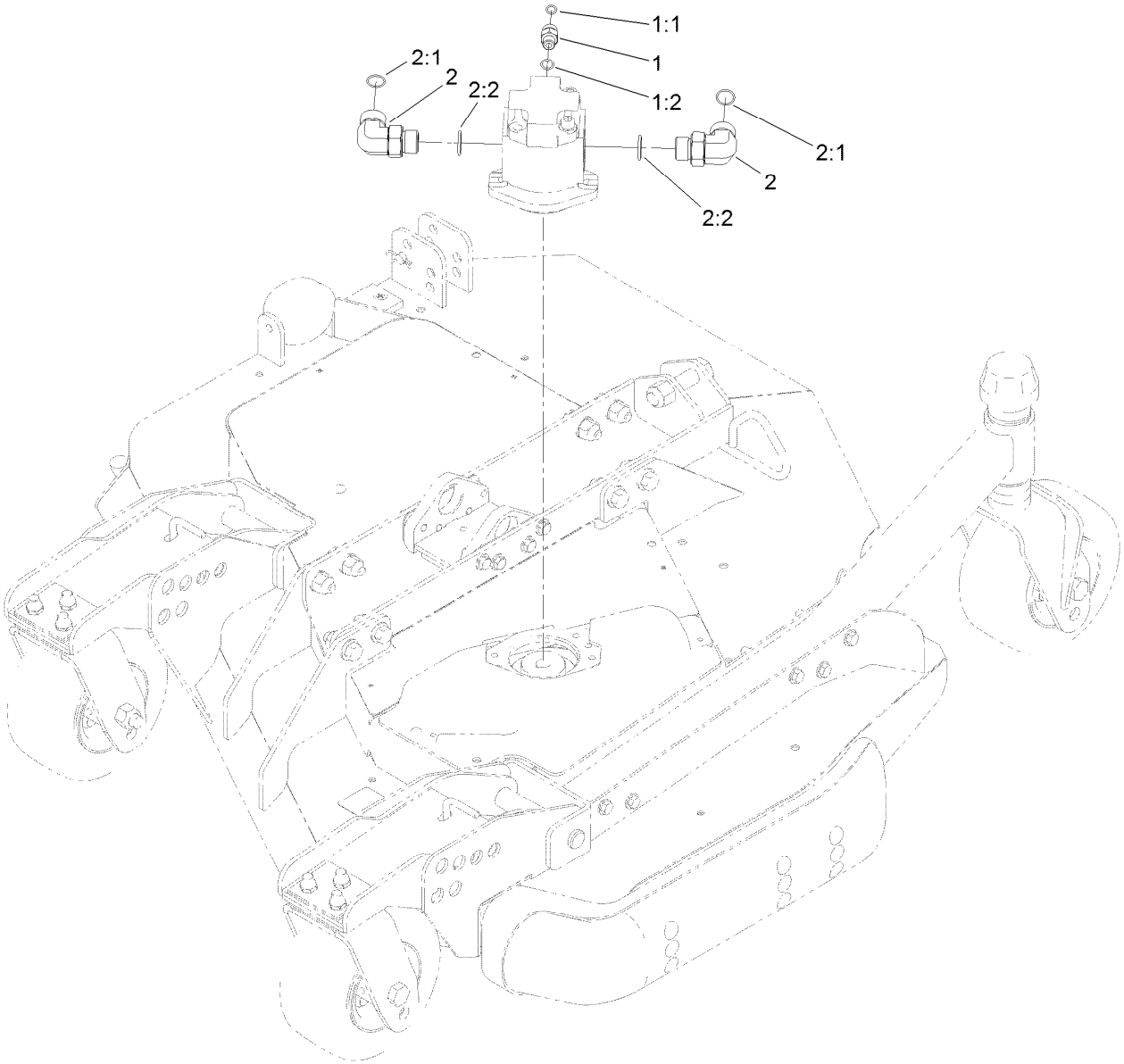

Left Deck Hydraulic Fitting Assembly

Ref.	*Part Number*	*Qty.*	*Description*
1	340-2	1	Fitting-Straight
1:1	237-22	1	O-Ring
1:2	237-42	1	O-Ring
2	340-142	2	Fitting-Elbow, 90 DEG
2:1	237-58	1	O-Ring
2:2	237-81	1	O-Ring

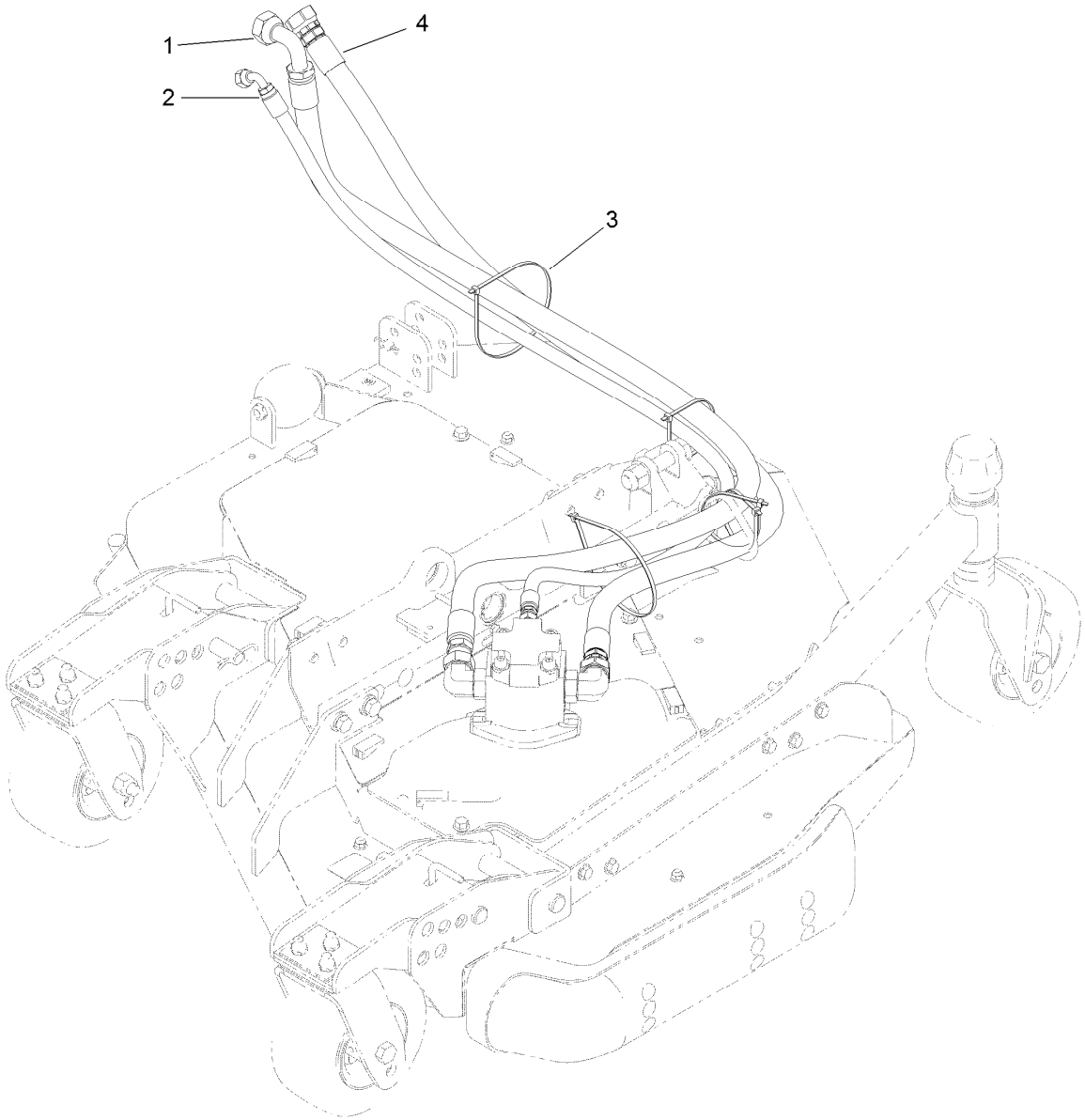

Left Deck Hose Assembly

Ref.	Part Number	Qty.	Description
1	120-8959	1	Hose-HYD
2	104-2265	1	Hose-HYD
3	3290-379	5	Tie-Cable
4	132-6116	1	Hose-HYD

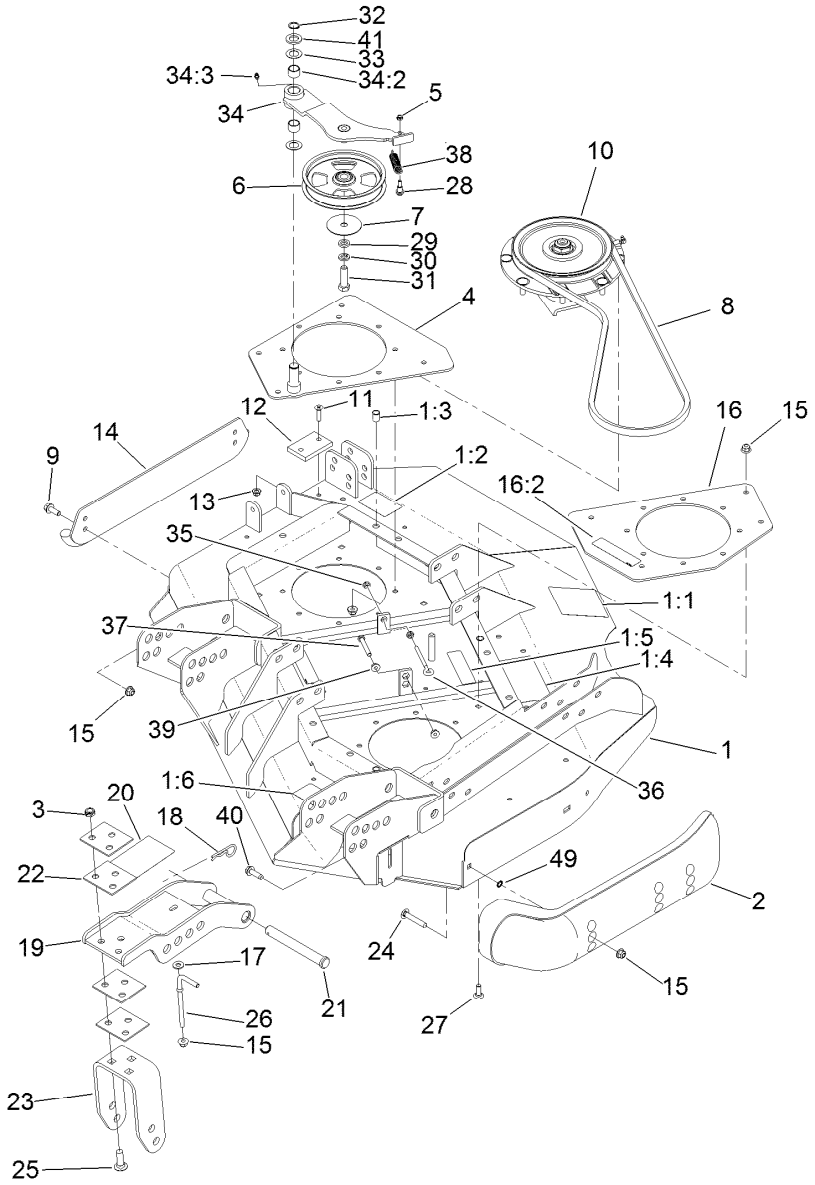

Left Deck, Idler and Skid Assembly

Ref.	Part Number	Qty.	Description
1	131-1236	1	Left Deck ASM
1:1	120-6604	1	Decal-Danger
1:2	100-5693	1	Decal-Rear HOC, LH
1:3	32148-9	3	Nut-Clinch
1:4	100-5622	1	Decal-HOC
1:5	100-6578	2	Decal-Danger
1:6	93-7818	1	Decal-Torque, Blade Bolt
2	112-1479	1	Skid-Bumper, Deck
3	3296-45	6	Nut-Hex
4	131-1233-01	1	Plate-Stiffener
5	3296-56	1	Nut-Lock, NI
6	132-9421	1	Pulley-Idler, Flat
7	100-3102	1	Washer-Flat
8	108-8076	1	V-Belt, Deck
9	3234-42	2	Screw-HHF
10	119-4776	1	Low-Driven Spindle ASM
11	32108-103	2	Screw-FH
12	69-9290	1	Pad-Bumper
13	104-8300	2	Nut-HF, NI
14	104-2250-01	1	Skid-Side
15	104-8301	26	Nut-HF, NI

Ref.	Part Number	Qty.	Description
16	131-1244	1	Plate-Spindle
16:2	100-6578	1	Decal-Danger
17	3256-3	2	Washer-Flat
18	3290-343	4	Pin-Hair
19	132-6150-01	2	Bracket-Caster
20	104-3579	1	Decal-HOC
21	120-5587	4	Pin-Clevis
22	104-7524	8	Shim
23	132-6157-01	2	Bracket-Fork
24	3231-33	2	Screw-CARR
25	3233-2	6	Screw-CARR
26	106-2047	2	Rod-Tension
27	3231-22	8	Screw-CARR
28	104-0858	1	Bolt-Shoulder
29	9202424	1	Spacer
30	3253-7	1	Washer-Lock
31	325-7	1	Screw-HH
32	32120-72	1	Ring-Snap
33	3-6498	2	Washer-Thrust
34	110-6128	1	Idler Arm ASM
34:2	256-76	2	Bushing

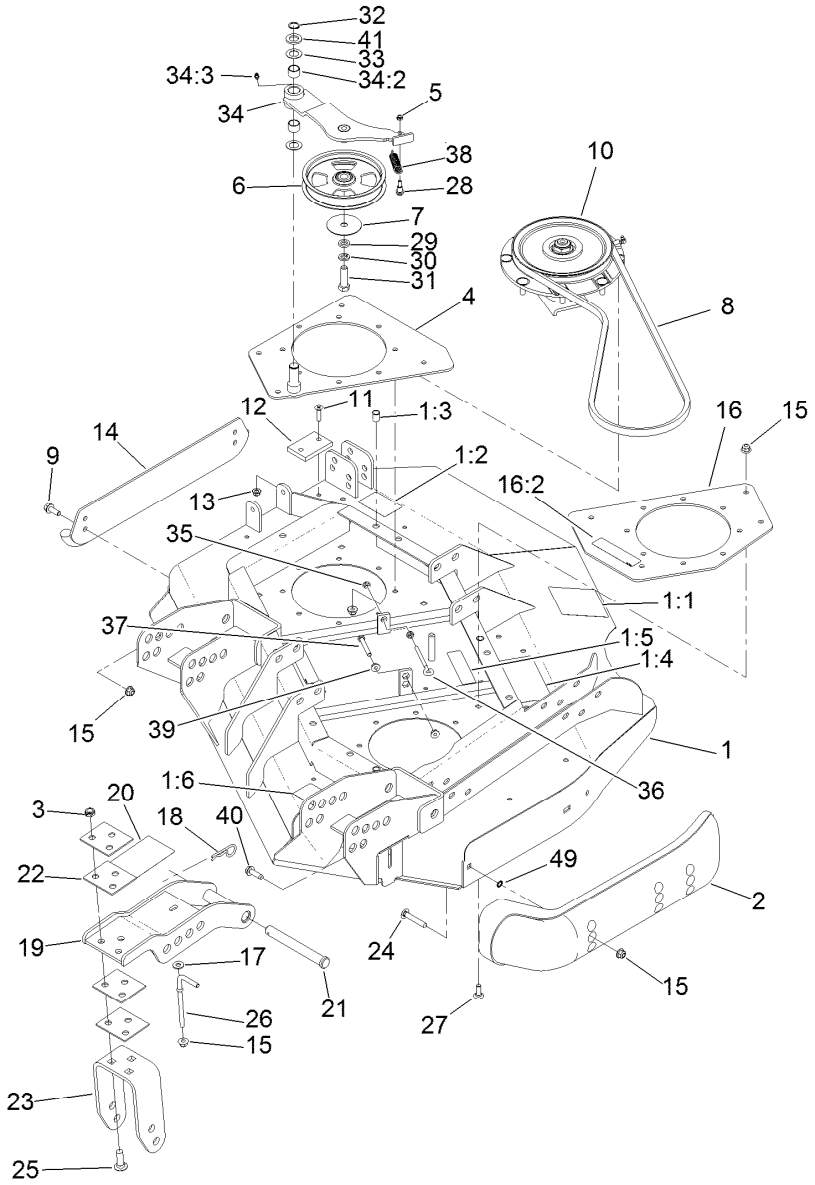

Left Deck, Idler and Skid Assembly (continued)

Ref.	Part Number	Qty.	Description
34:3	302-5	1	Fitting-Grease
35	32128-14	2	Nut-HF
36	68-0090	1	Screw-Adjusting
37	9114524	1	Bolt-TAP, HH
38	107938	1	Spring-Extension

Ref.	Part Number	Qty.	Description
39	32128-26	2	Nut-HF
40	9136144	1	Screw-HWHTF
41	70-1160	1	Washer
49	32151-72	2	Ring-Retaining

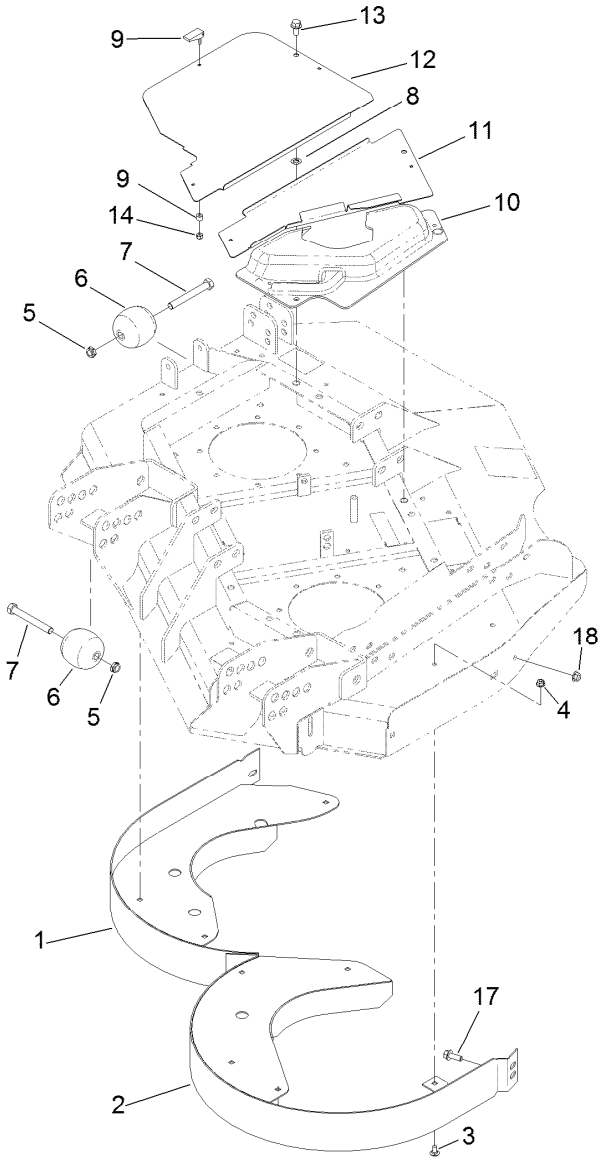

Left Deck Discharge Chamber and Cover Assembly

Ref.	Part Number	Qty.	Description
1	130-2682-01	1	Chamber-Outer
2	130-2683-01	1	Chamber-Inner
3	3230-18	9	Screw-CARR
4	104-8300	9	Nut-HF, NI
5	3296-45	2	Nut-Hex
6	29-4820	2	Roller
7	325-17	2	Screw-HH
8	107-3154	3	Nut-Push

Ref.	Part Number	Qty.	Description
9	74-5950	7	Latch-Swell
10	100-5669	1	Cover-Motor, LH Deck
11	100-5664-03	1	Plate-Cover, LH
12	100-5667-03	1	Plate-Cover, LH Side
13	3234-1	3	Screw-HHF
14	1-804254	7	Nut-Lock, HH
17	3234-42	1	Screw-HHF
18	104-8301	1	Nut-HF, NI

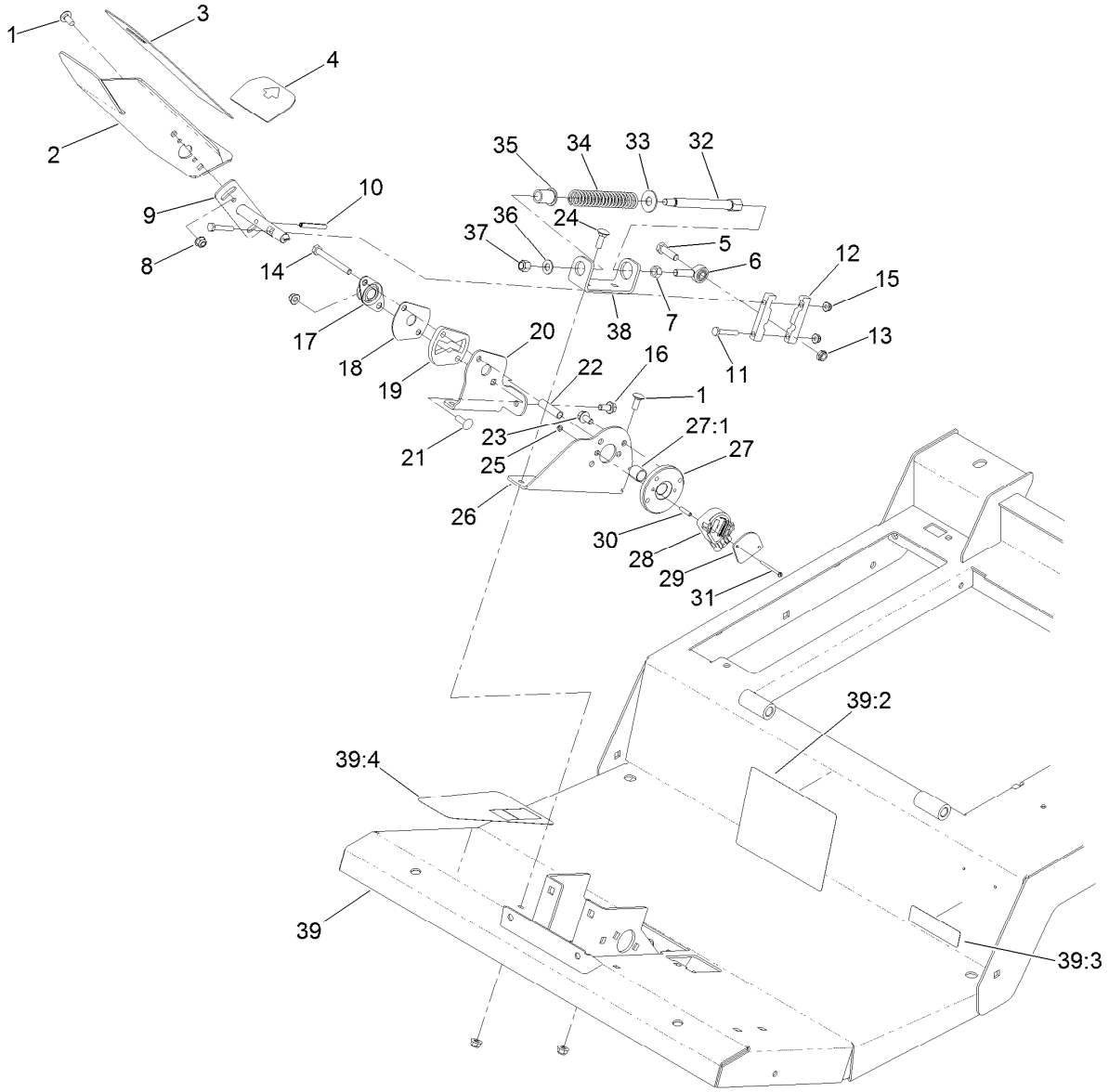

Traction Pedal and Platform Assembly

Ref.	Part Number	Qty.	Description
1	3230-23	5	Bolt-CARR
2	136-4368-01	1	Pedal-Traction
3	93-5347	1	Abrasive-Pedal
4	93-5368	1	Abrasive-Pedal
5	323-7	1	Screw-HH
6	2411-36	1	Bearing-End, Rod
7	3219-3	1	Nut-Hex
8	104-8300	9	Nut-HF, NI
9	131-2245	1	Shaft-Pedal, Traction
10	32121-78	1	Pin-Roll
11	321-37	2	Screw-HH
12	117-5459	2	Block-Clamp
13	3296-59	1	Nut-Lock, NI
14	322-14	1	Screw-HH
15	104-7201	2	Nut-HF, NI
16	3234-47	1	Screw-HHF
17	256-236	1	Bearing-Mount, Flange
18	117-5455	1	Plate-Cover
19	117-5454	1	Plate-Butterfly
20	131-2250-01	1	Bracket-Butterfly
21	3230-22	1	Screw-CARR

Ref.	Part Number	Qty.	Description
22	93-7960	1	Spacer
23	114-7728	2	Screw-HHF, Patch
24	3230-2	2	Bolt-CARR
25	3296-9	2	Nut-Hex
26	136-4384-01	1	Bracket-Sender
27	117-5445	1	Bushing Hub ASM
27:1	95-7497	1	Bushing-Wheel
28	114-5609	1	Sensor-Position
29	114-5595	1	Plate-Capture
30	114-5608	2	Spacer-Standoff
31	32105-25	2	Screw-SHH
32	117-5446	1	Shaft-Spring
33	3256-5	1	Washer-Flat
34	84-9100	1	Spring
35	92-7610	1	Retainer-Spring
36	3256-24	1	Washer-Plain
37	3296-6	1	Nut-Lock
38	131-2252-01	1	Bracket-Spring
39	132-6251	1	Platform ASM
39:2	114-0846	1	Decal-Instructions, Operating

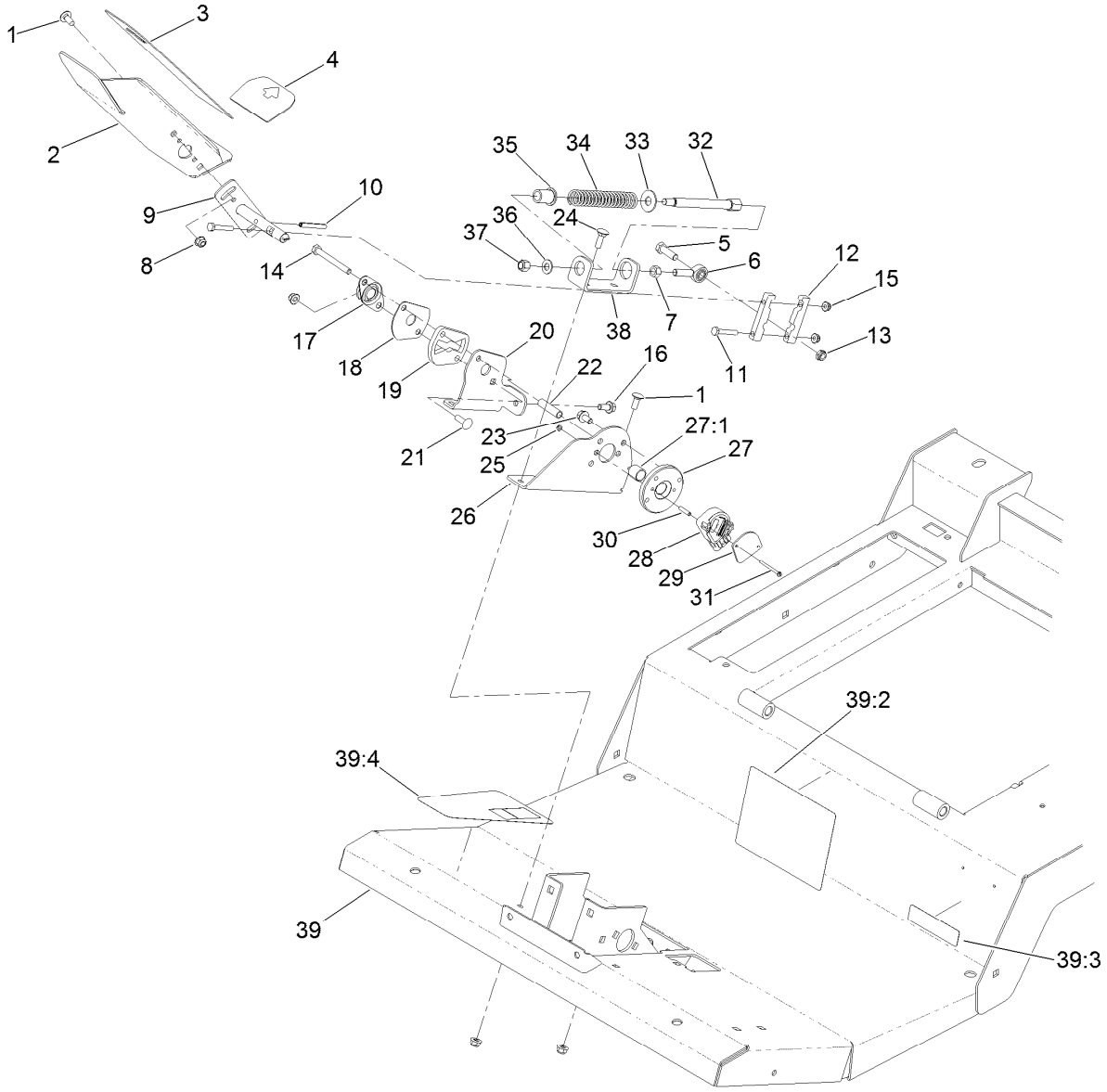

Traction Pedal and Platform Assembly (continued)

Ref.	*Part Number*	*Qty.*	*Description*
39:3	117-2718	1	Decal-Arrester, Spark
39:4	114-0849	1	Decal-Pedal, Traction

Brake Pedal Assembly

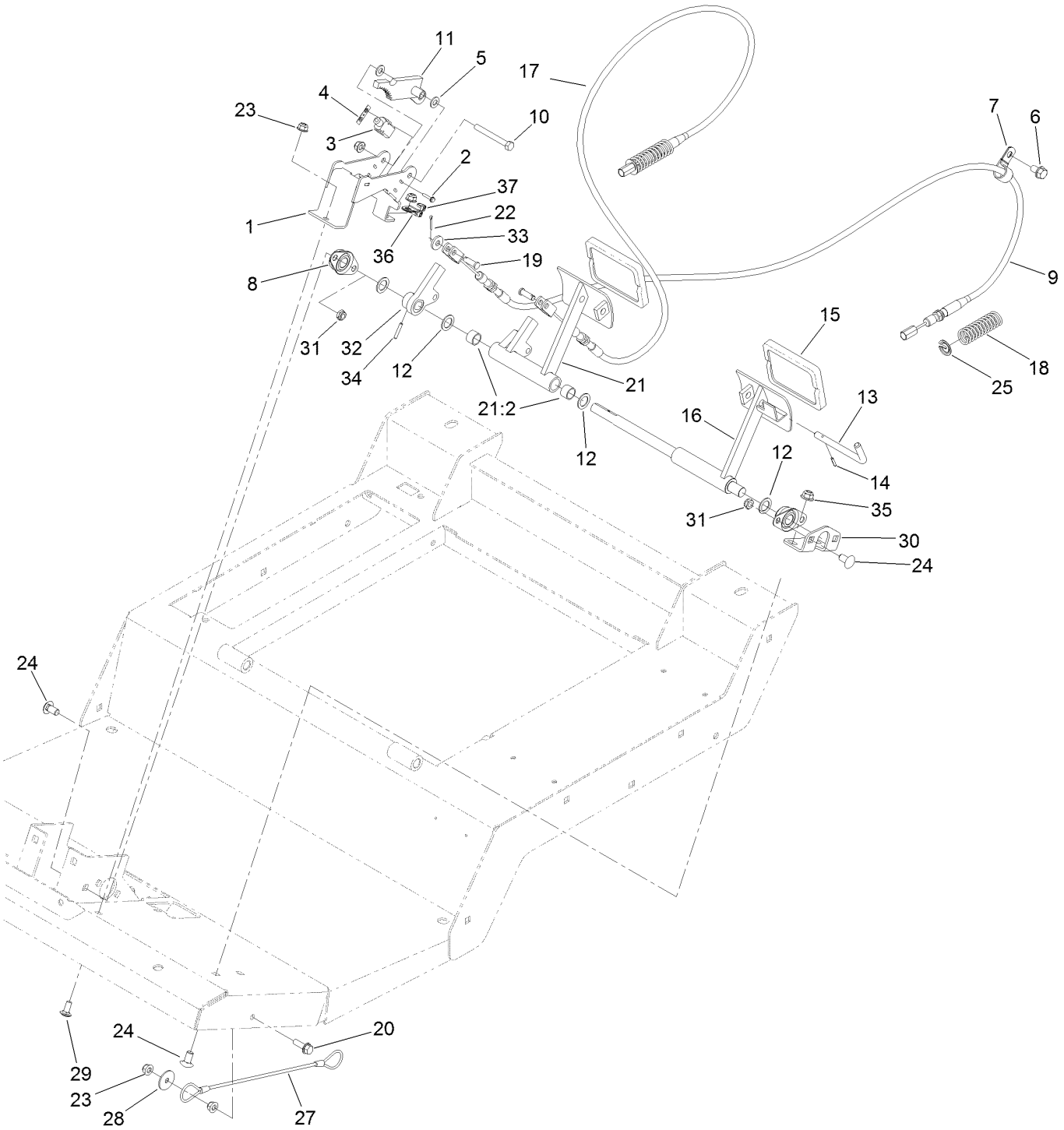

Brake Pedal Assembly (continued)

Ref.	Part Number	Qty.	Description
1	132-6259-03	1	Mount-Switch
2	117-5458	4	Screw-HHF
3	99-3410	2	Switch
4	108-9824	2	Nut-Switch
5	3256-23	2	Washer-Plain
6	32144-69	2	Screw-HWHTF
7	2412-4	2	Clamp-R
8	256-236	2	Bearing-Mount, Flange
9	120-8899	1	Cable-Brake, LH
10	322-13	1	Screw-HH
11	132-6290-03	1	Rack
12	3256-69	4	Washer-Flat
13	63-7880	1	Pin-Latch, Brake
14	32121-50	1	Pin-Spring
15	93-8742	2	Footpad-Brake
16	132-6288-01	1	Pedal-Brake, LH
17	120-8898	1	Cable-Brake, RH
18	94-3088	2	Spring-Compression
19	120-9694	2	Pin-Clevis
20	3234-29	1	Screw-HHF
21	132-6252	1	Pedal-Brake, RH
21:2	256-42	2	Bushing
22	3272-6	2	Pin-Cotter
23	104-8300	8	Nut-HF, NI
24	3231-21	6	Screw-CARR
25	94-3050	2	Plate-Spring
27	110-4896	1	Lanyard
28	3256-57	1	Washer-Flat
29	3230-23	2	Bolt-CARR
30	132-6247-01	1	Mount-Bearing
31	3296-59	4	Nut-Lock, NI
32	132-6229	1	Arm-Cable, Brake
33	4-2390	2	Washer-Flat
34	32121-125	1	Pin-Roll
35	104-8301	2	Nut-HF, NI
36	88-7970	1	Clip
37	1-303287	2	Tie-Cable

Seat Base and Seat Assembly

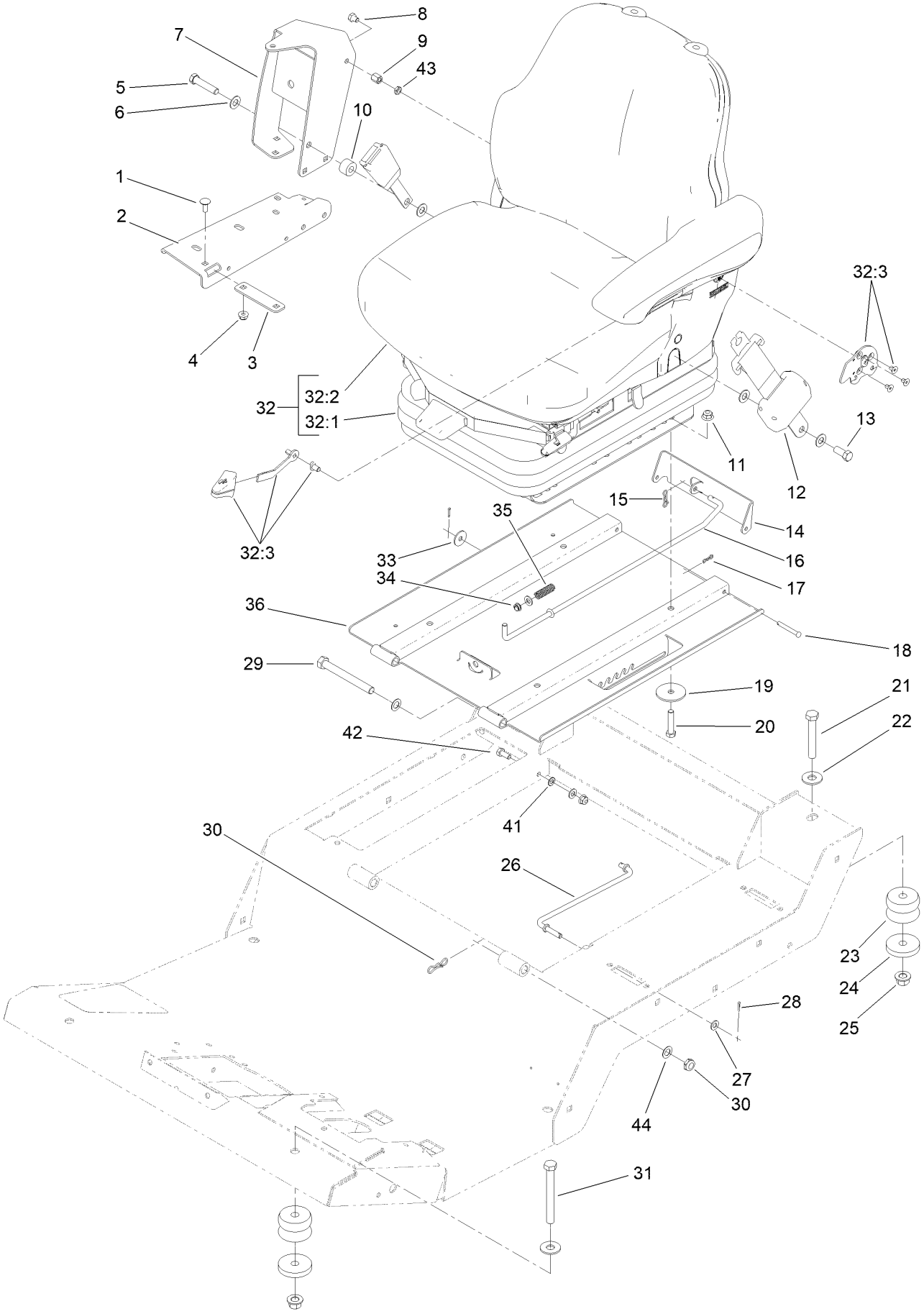

Seat Base and Seat Assembly (continued)

Ref.	Part Number	Qty.	Description
1	3230-23	6	Bolt-CARR
2	119-0000-03	1	Channel-Support
3	112-7449-03	1	Bracket-Support
4	104-8300	7	Nut-HF, NI
5	3212-8	1	Screw-HH
6	3256-25	4	Washer-Flat
7	117-4798-03	1	Arm-Support
8	108-8646	1	Screw-HH, Lock
9	112-7405	1	Nut-Hex, Coupling
10	17-7190	1	Spacer-Finger
11	104-8301	4	Nut-HF, NI
12	110-0413	1	Seatbelt-Retractable
13	3212-4	1	Screw-HH
14	120-9017-03	1	Latch-Seat
15	119-1415	1	Pin-Cotter, Locking
16	120-9018	1	Rod-Latch
17	119-1414	2	Pin-Cotter, Locking
18	283-57	2	Pin-Clevis
19	83-1040	4	Washer-Flat
20	323-9	4	Screw-HH
21	112-7264	2	Screw-HH
22	3256-6	4	Washer-Flat
23	110-5954	4	Mount-Center, Bonded
24	115-5519	4	Washer-Plain
25	99-5107	4	Nut-Lock
26	93-5338	1	Rod-Prop
27	3256-23	3	Washer-Plain
28	3272-5	2	Pin-Cotter
29	325-18	2	Screw-HH
30	3296-45	2	Nut-Hex
31	702093	2	Screw-HH
32	130-2700	1	Seat And Suspension ASM
32:1	130-2702	1	Air Ride Seat Suspension
32:2	117-9429	1	Matrix Cloth Seat ASM
32:3	132-1304	1	Backrest Adjustment Kit
33	3256-82	1	Washer-Flat
34	5979	1	Bushing-Nyliner
35	95-1821-03	1	Spring-Compression
36	130-6019-03	1	Plate-Seat
41	3255-8	1	Washer-Lock
42	322-3	1	Screw-HH
43	117-4059	1	Nut-Hex
44	36-4780	4	Washer-Plain

Cloth Premium Seat Assembly No. 117-9429

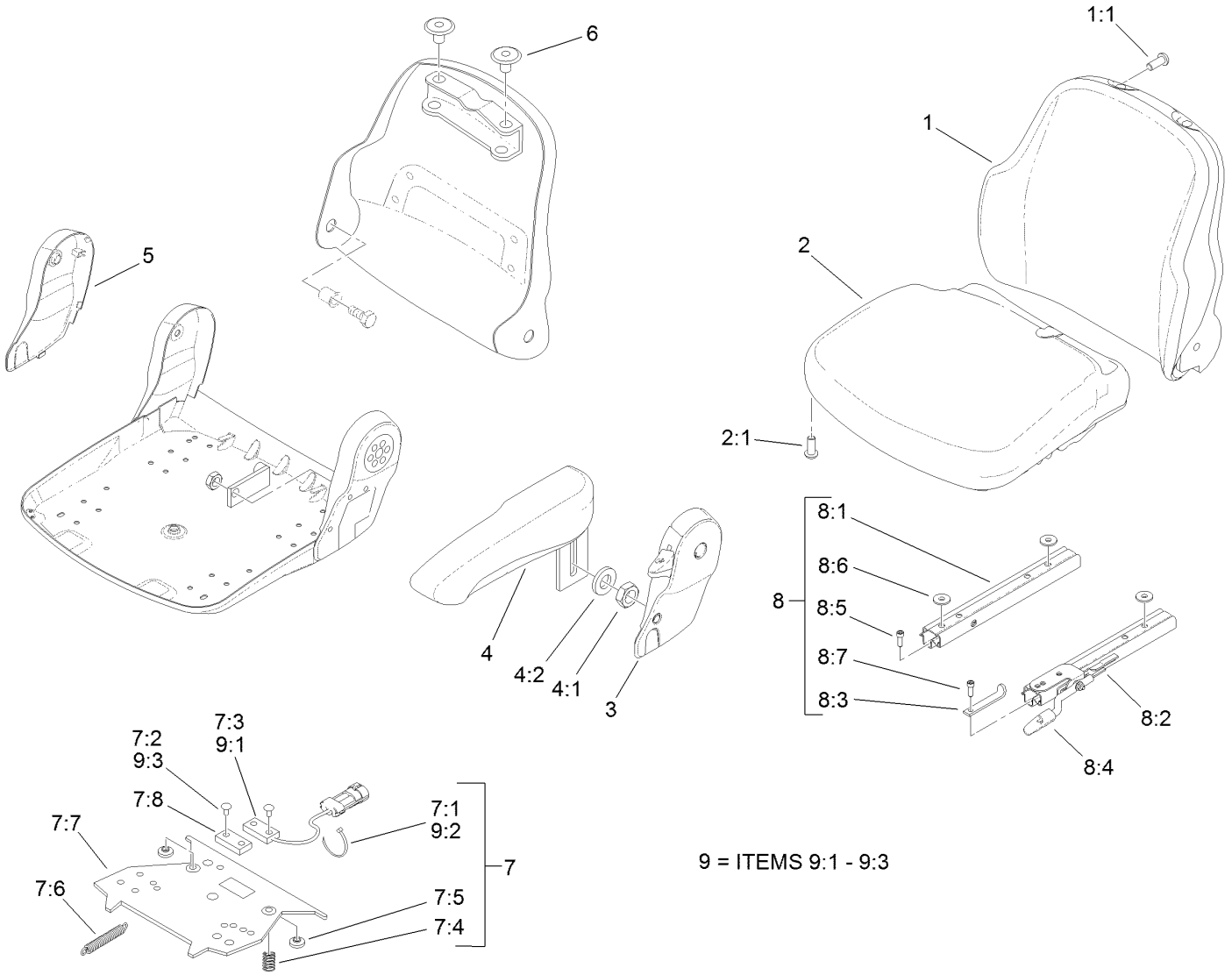

Cloth Premium Seat Assembly No. 117-9429 (continued)

Ref.	Part Number	Qty.	Description
1	117-9415	1	Backrest Cushion ASM Matrix Cloth
1:1	119-7742	4	Screw-Cushion
2	117-9416	1	Seat Cushion ASM Matrix Cloth
2:1	119-7742	3	Screw-Cushion
3	108-8018	1	Cover-Armrest
4	108-8019	1	LH Armrest ASM
4:1	82-9650	1	Nut
4:2	107-1198	1	Washer
5	108-8021	1	Cover-Armrest
6	108-8022	2	Cover-Black
7	108-8024	1	Switch Kit
7:1		3	Wire Tie ●
7:2		4	Rivet ●
7:3		1	Sensor-Seat Switch ●
7:4		2	Spring-Compression ●
7:5		2	Bumper-Pressure Plate ●
7:6		1	Spring-Extension ●
7:7		1	Plate-Mounting ●
7:8		1	Magnet ●
8	108-8025	1	Adjustment Rail Set
8:1		1	Rail-Adjustment, RH ●
8:2		1	Rail-Adjustment, LH ●
8:3		1	Stop-Rail ●
8:4		1	Handle ●
8:5		3	Screw ●
8:6		3	Washer ●
8:7		1	Screw ●
9	110-6189	1	Switch Kit
9:1		1	Switch ●
9:2		3	Wire Tie ●
9:3		2	Rivet ●

● Not serviced separately

Seat Suspension Assembly No. 130-2702

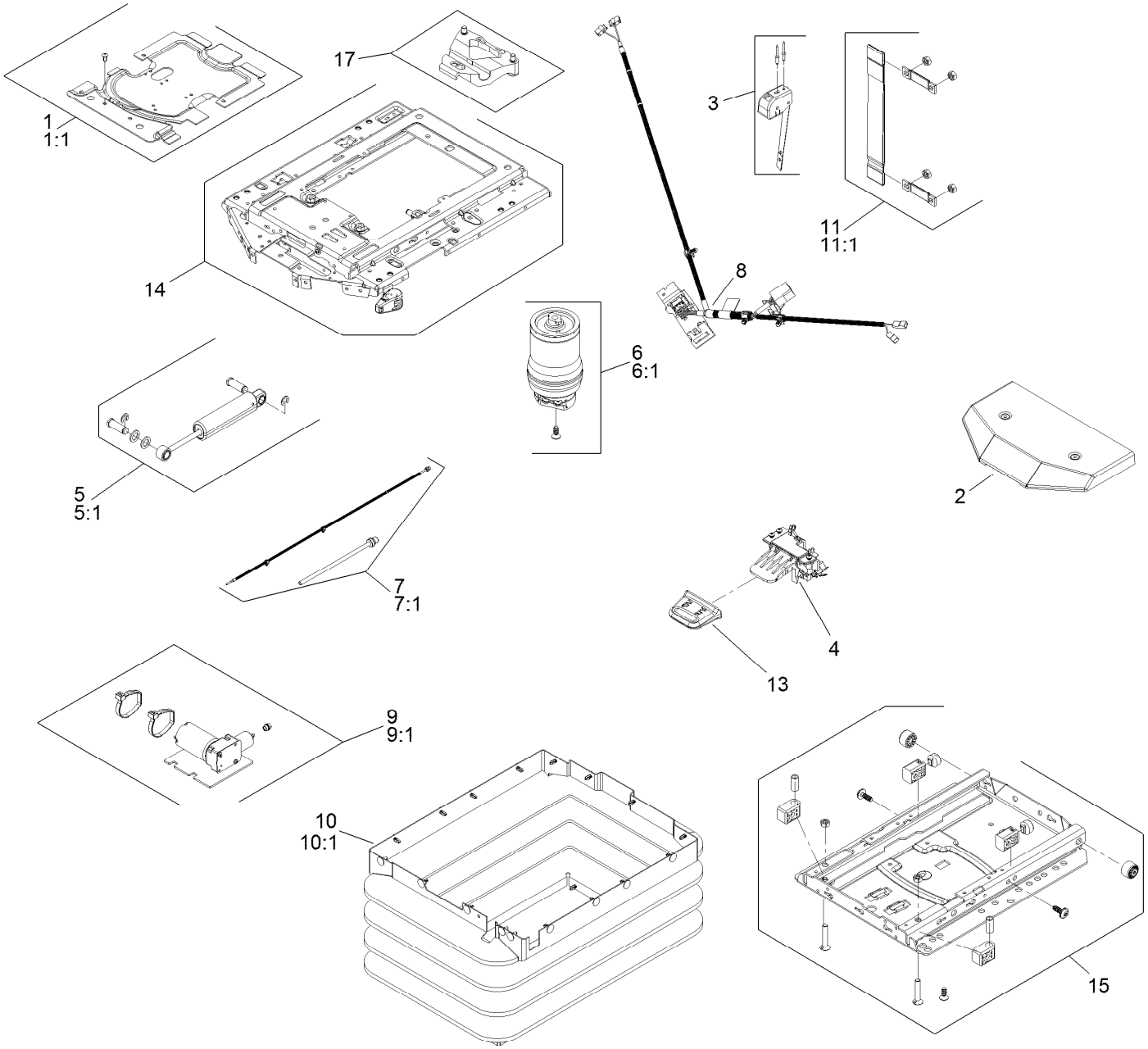

Seat Suspension Assembly No. 130-2702 (continued)

Ref.	Part Number	Qty.	Description
1	130-2709	1	Cover ASM
1:1	130-2710	1	Cover Kit
2	108-8027	1	Cover
3	130-2711	1	Control-Level
4	108-8029	1	Valve-Control, Air
5	130-2712	1	Shock Absorber ASM
5:1	130-2713	1	Shock Absorber Kit
6	130-2714	1	Air Spring ASM
6:1	130-2715	1	Air Spring Kit
7	130-2716	1	Air Tube ASM
7:1	130-2717	1	Air Tube Kit
8	130-2718	1	Harness-Wire
9	130-2719	1	Compressor
9:1	130-2720	1	Compressor Kit
10	130-2721	1	Bellows ASM
10:1	130-2722	1	Bellows Kit
11	130-2723	1	Tether
11:1	130-2724	1	Tether Kit
12	130-2725	1	Wear Parts Kit ●
13	130-2726	1	Handle
14	130-2727	1	Upper Suspension Kit
15	130-2728	1	Lower Suspension Kit
16	130-2729	1	Adjuster Mounting Kit ●
17	130-2730	1	Limiter-Thrust

● Not illustrated

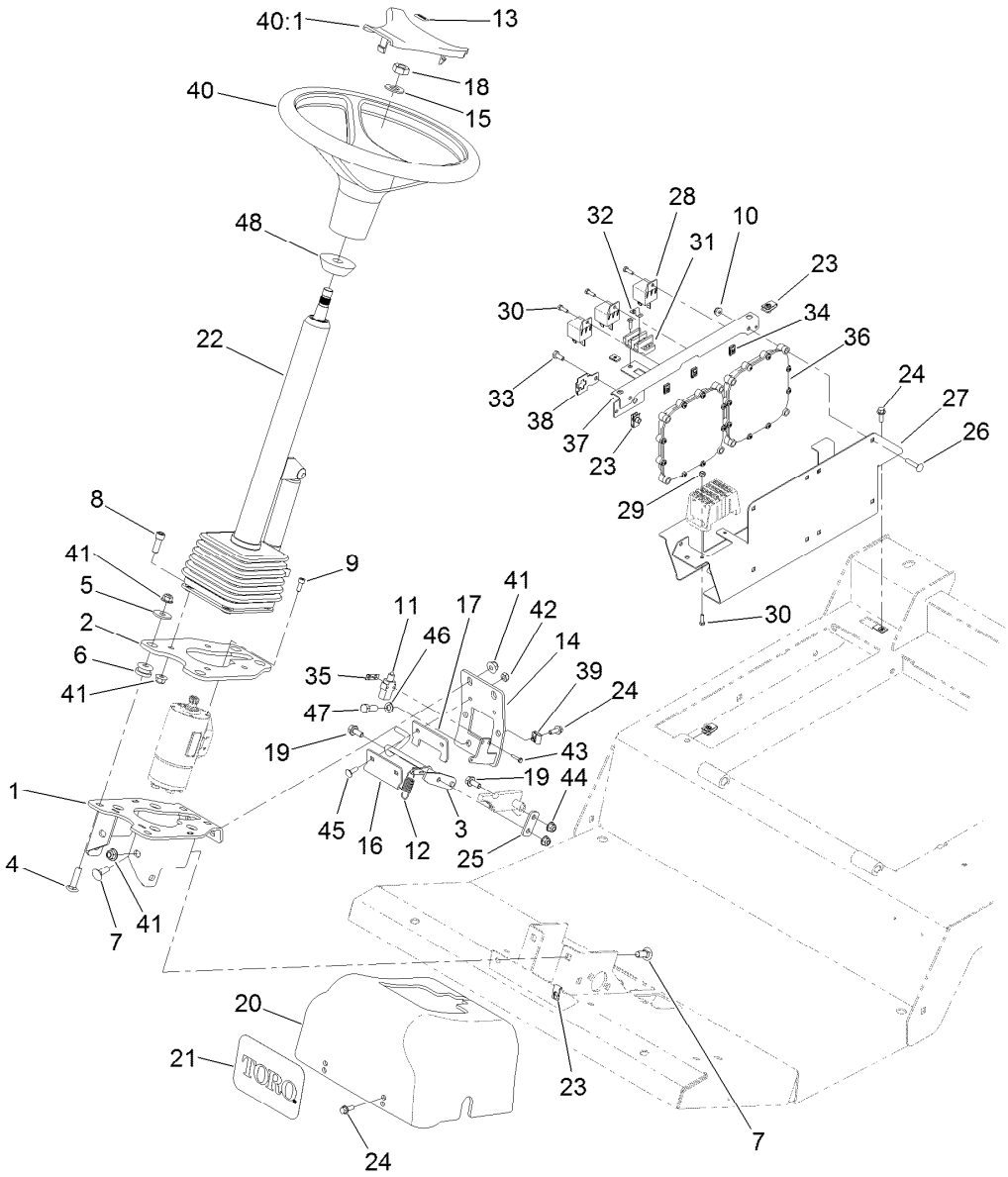

Steering and Controller Assembly

Ref.	Part Number	Qty.	Description
1	132-6260-03	1	Mount
2	132-6266-03	1	Plate-Mount, Column
3	132-6285	1	Rod-Brake
4	3231-26	4	Screw-CARR
5	63-8410	4	Washer
6	63-9750	4	Mount
7	3231-2	6	Bolt-CARR
8	3274-7	4	Screw-HSH
9	105-2409	4	Screw-HSH
10	104-7201	8	Nut-HF, NI
11	99-3410	1	Switch
12	119-7676	1	Spring-Extension
13	98-1459	1	Decal
14	132-6225-03	1	Support-Rear
15	3256-27	1	Washer-Flat
16	132-6283	1	Plate-Brake
17	132-6284	1	Plate-Brake
18	3296-33	1	Nut-Lock, NI
19	3234-47	2	Screw-HHF
20	132-6244	1	Cover-Steering
21	105-1217	1	Decal

Ref.	Part Number	Qty.	Description
22	132-6230	1	Steering Tilt Column ASM
23	107069	7	Clip
24	3234-4	6	Screw-HHF
25	119-0110	1	Link-Brake
26	3229-3	8	Screw-CARR
27	120-4093-03	1	Mount-Power
28	99-7435	3	Relay
29	3296-12	2	Nut-Lock, NI
30	3290-134	7	Screw
31	42862	1	Block-Terminal, Ground
32	42863	1	Strip-Jumper
33	321-3	1	Screw-HH
34	107-1013	5	Nut-Speed
35	108-9824	1	Nut-Switch
36	114-3321	2	Controller-Tec
37	120-4127-03	1	Mount-Relay
38	114-5502	1	Clip-Fuse
39	609900	2	Nut-Speed
40	98-1471	1	Wheel-Steering
40:1	98-1468	1	Cover-Wheel, Steering
41	104-8301	14	Nut-HF, NI

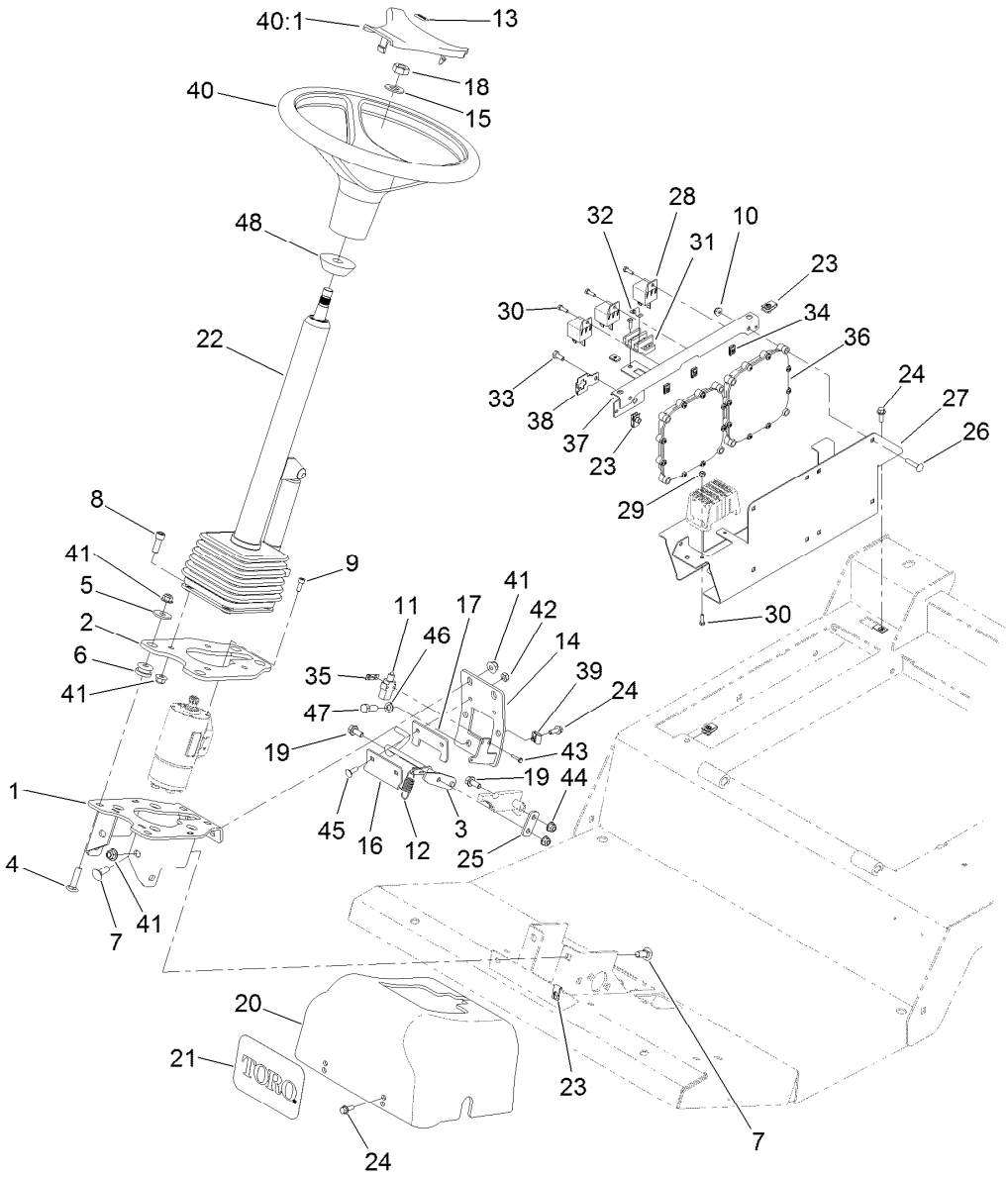

Steering and Controller Assembly (continued)

Ref.	Part Number	Qty.	Description
42	3296-16	2	Nut-Lock, NI
43	117-5458	2	Screw-HHF
44	104-8300	2	Nut-HF, NI
45	1-807512	2	Bolt-CARR
46	3253-21	2	Washer-Lock
47	323-6	2	Screw-HH
48	93-5429	1	Collar-Foam

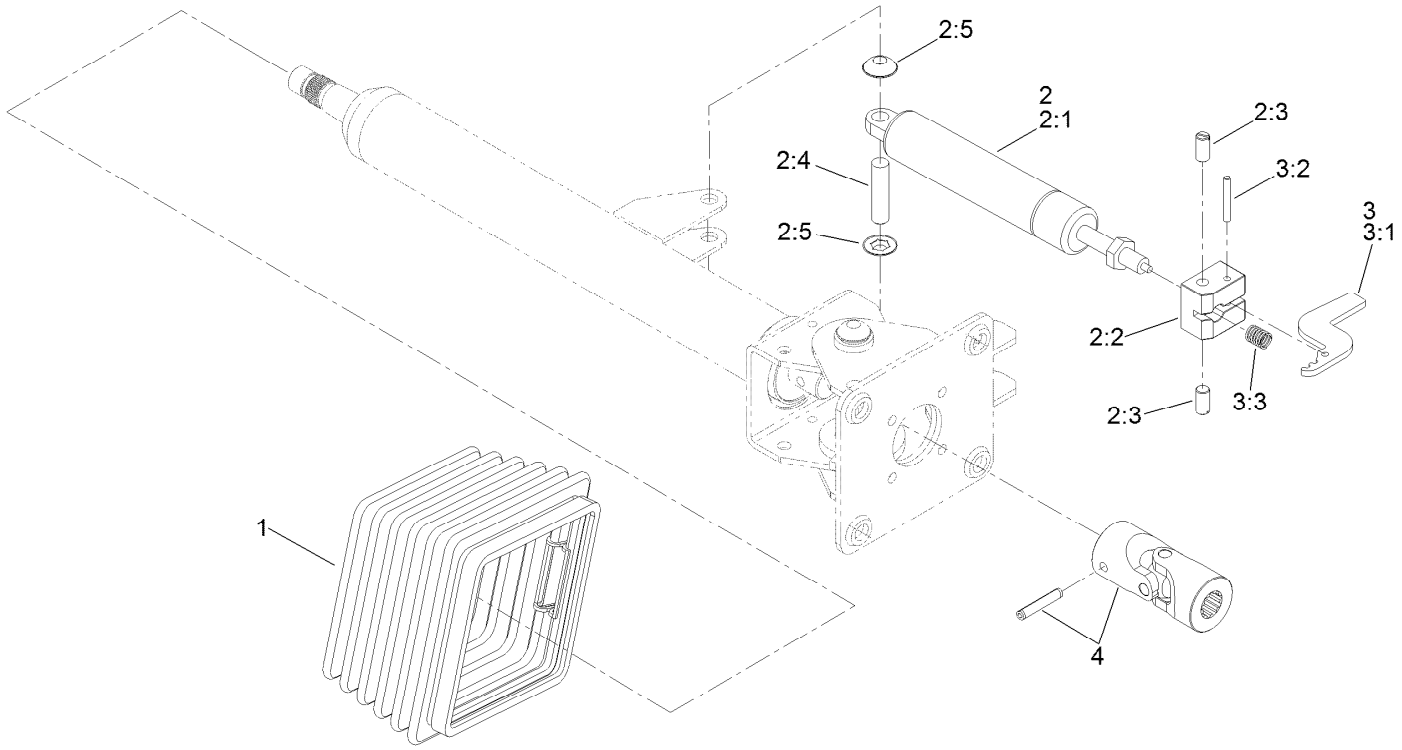

Steering Column Assembly No. 132-6230

Ref.	Part Number	Qty.	Description
1	110-6462	1	Bellows-Rubber
2	110-6463	1	Cylinder Service Kit
2:1		1	Cylinder-Gas ●
2:2		1	Block-Pedal ●
2:3		2	Bolt ●
2:4		1	Pin ●
2:5		2	Washer-Lock ●
3	136-4385	1	Pedal Service Kit
3:1		1	Pedal ●
3:2		1	Pin ●
3:3		1	Spring ●
4	120-6256	1	Universal Joint Kit

● Not serviced separately

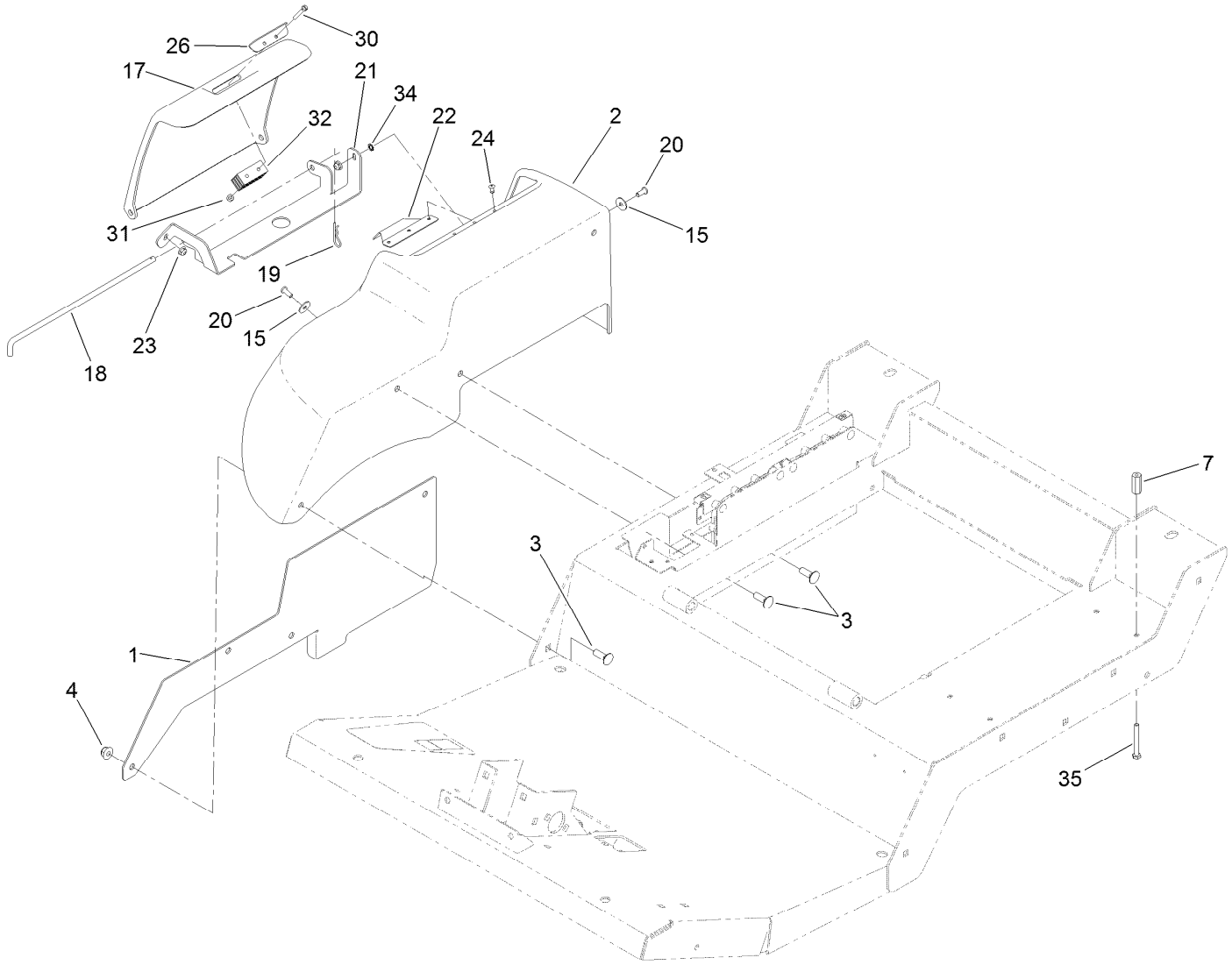

RH Fender Assembly

Ref.	Part Number	Qty.	Description
1	121-1579-03	1	Plate-Fender, RH
2	120-4113	1	Fender-RH
3	3231-38	4	Screw-CARR
4	104-8301	4	Nut-HF, NI
15	87-6630	2	Washer-Plain
7	136-4358	4	Nut-Coupling
17	120-4115	1	Cover-Battery
18	121-1588	1	Rod-Hinge
19	3290-467	1	Pin-Hair
20	3274-31	2	Screw-HSBH

Ref.	Part Number	Qty.	Description
21	121-1586-03	1	Mount-Cover
22	127-3706	1	Plate-Cover
23	104-7201	2	Nut-HF, NI
24	3269-23	3	Rivet-Pop
26	127-3705	1	Plate-Cover
30	32105-1	2	Screw-SHH
31	3296-2	2	Nut-Lock, NI
32	69-6260	1	Magnet
34	3255-7	1	Washer-Lock/EXT
35	100-5858	4	Screw-HH

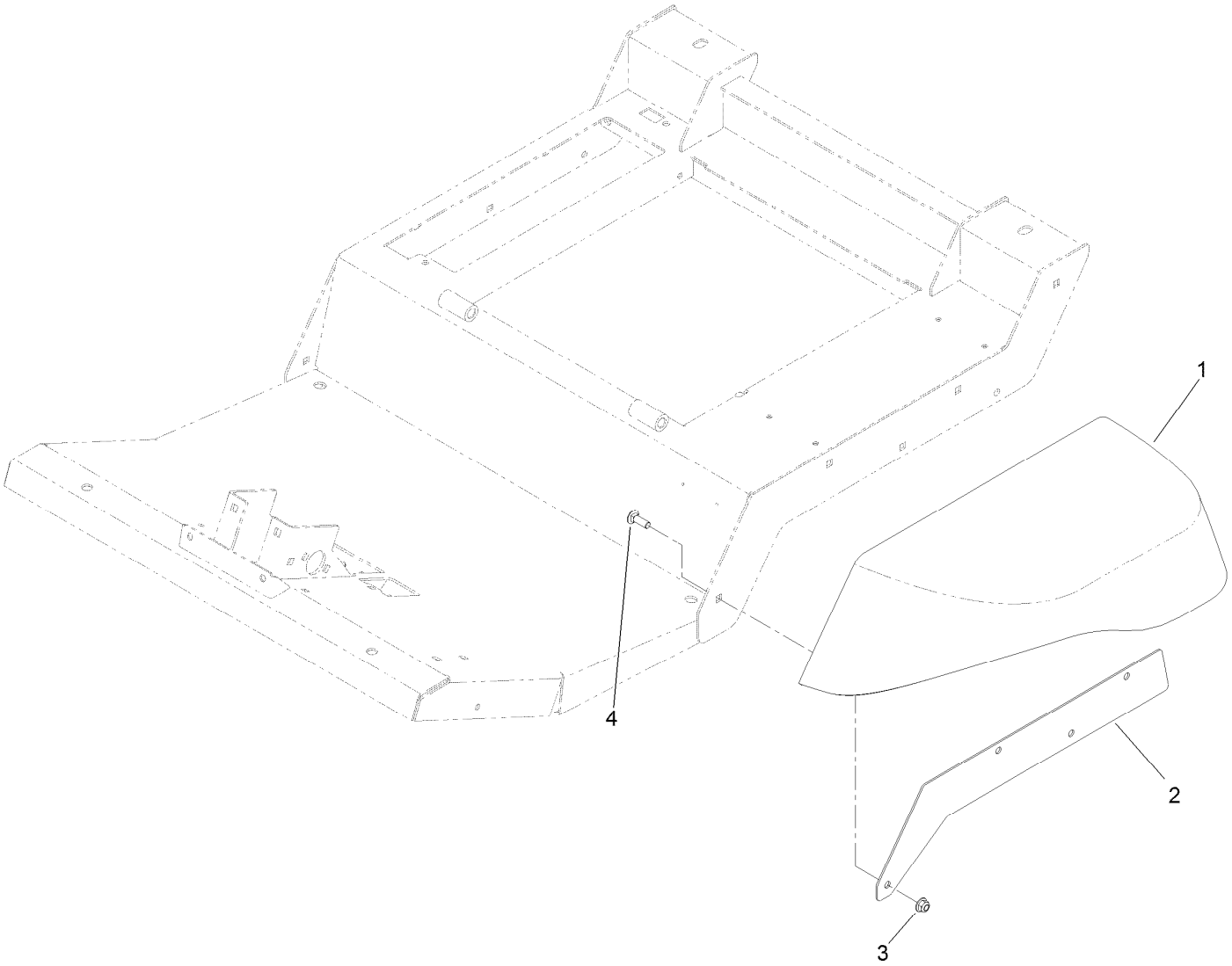

LH Fender Assembly

Ref.	Part Number	Qty.	Description
1	120-4114	1	Fender-LH
2	121-1580-03	1	Plate-Fender, LH
3	104-8301	4	Nut-HF, NI
4	3231-38	4	Screw-CARR

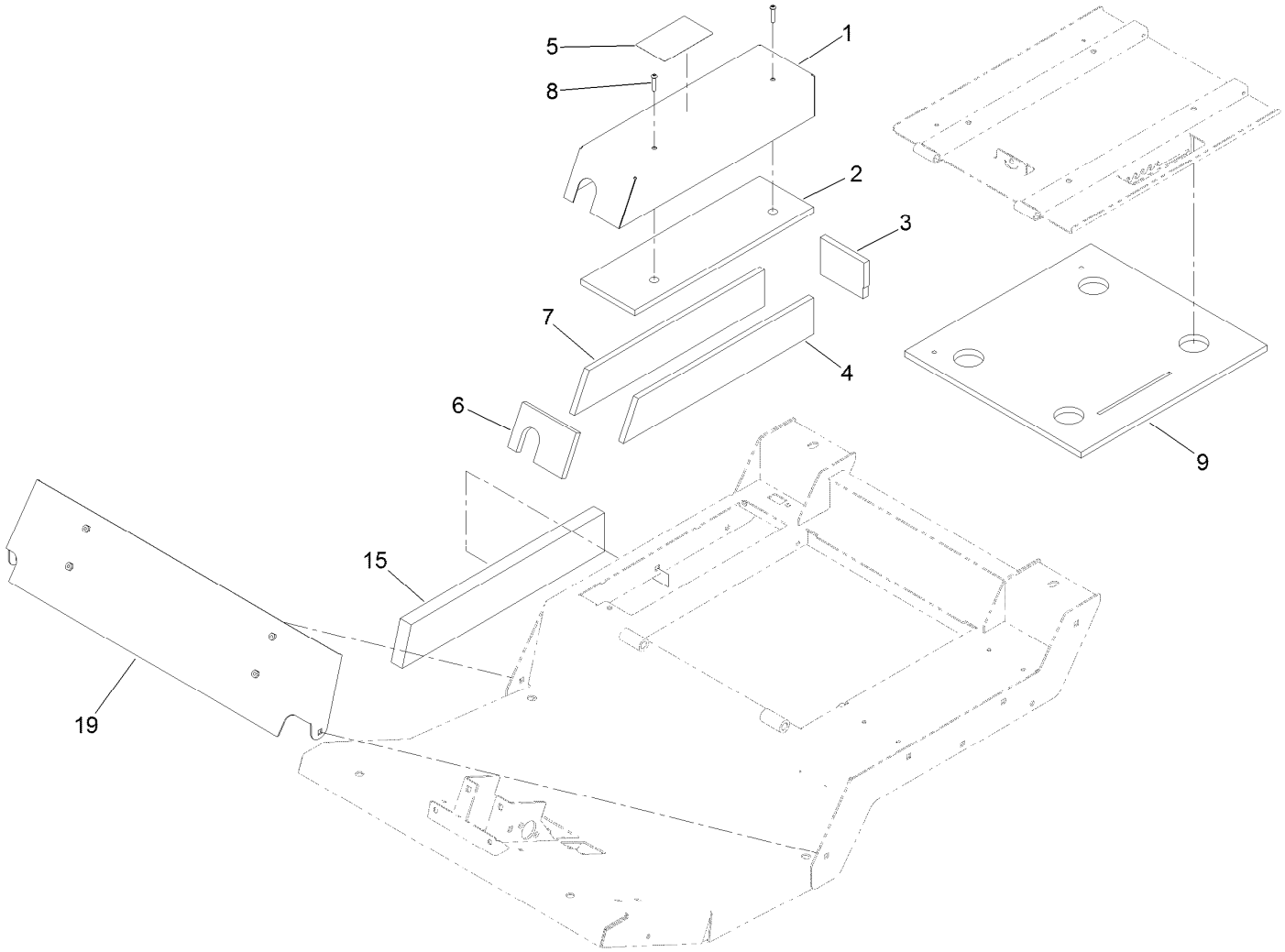

Acoustic Foam, Panel and Cover Assembly

Ref.	*Part Number*	*Qty.*	*Description*
1	136-4386-03	1	Cover-Controller
2	136-4378	1	Foam-Cover, Top
3	136-4375	1	Foam-Cover, Rear
4	136-4376	1	Foam-Cover, Left
5	136-4436	1	Decal-Fuses
6	136-4374	1	Foam-Cover, Front
7	136-4377	1	Foam-Cover, Right
8	120-0834	2	Screw-HSBH
9	127-3696	1	Foam-Seat
15	127-3708	1	Foam-Right
19	136-4373-01	1	Plate-Foot

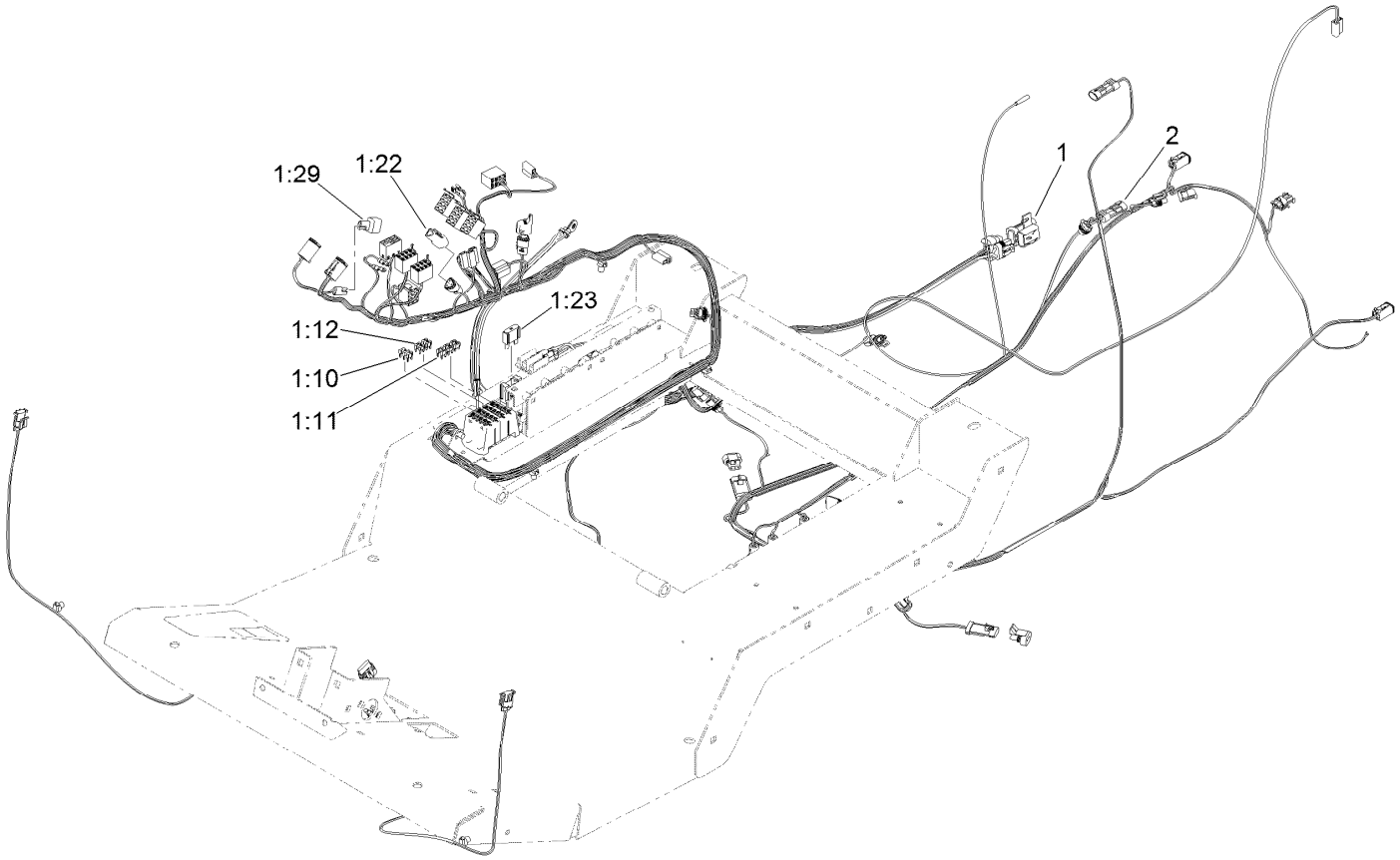

Platform Wire Harness and Fuse Assembly

Ref.	*Part Number*	*Qty.*	*Description*
1	122-0973	1	Harness-Wire, Platform
1:10	121-8861	3	Fuse-Mini Blade, 2 Amp
1:11	121-8865	6	Fuse-Mini Blade, 7.5 Amp
1:12	121-8866	4	Fuse-Mini Blade, 10 Amp
1:22	32180-043	1	Resistor-120 Ohm
1:23	114-3342	1	Fuse-Maxi, 60 Amp
1:29	104-4022	1	Resistor-75 Ohm
2	122-0353	1	Harness-Wire

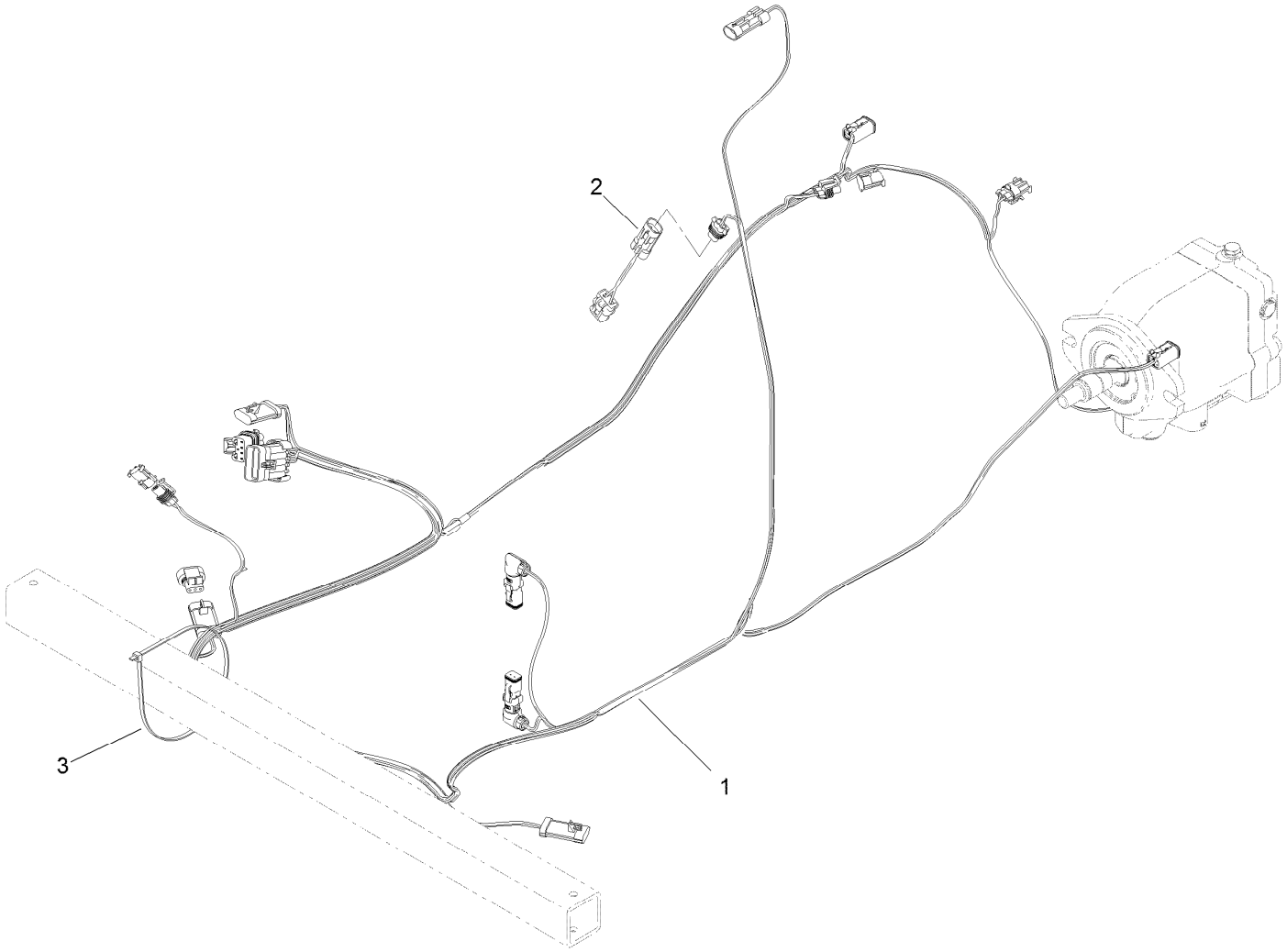

Rear Wire Harness Assembly

Ref.	*Part Number*	*Qty.*	*Description*
1	122-0974	1	Harness-Wire, Rear
2	115-1931	1	Harness-Wire, Fuel Pump Adapter
3	3290-379	1	Tie-Cable

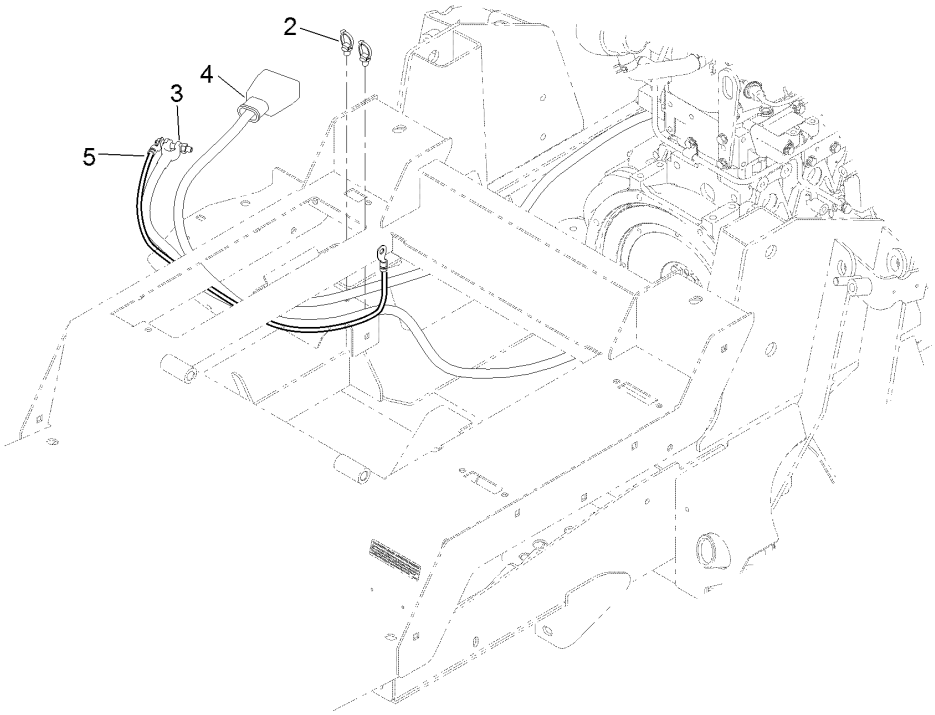

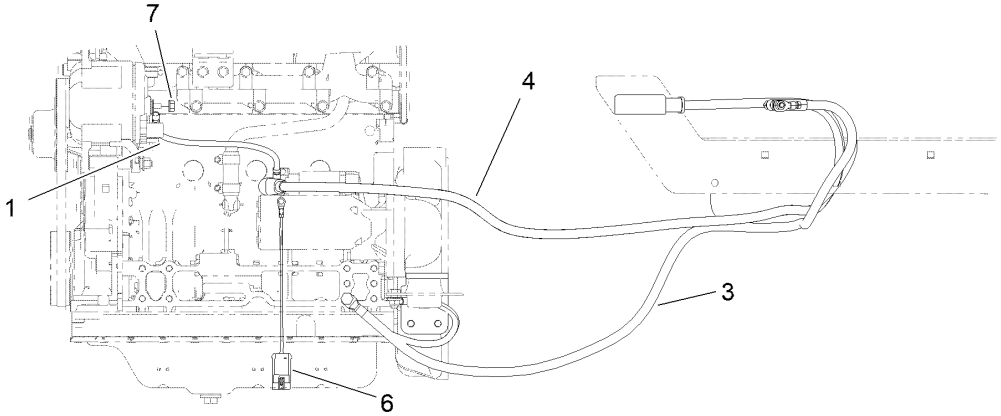

Battery Cable and Ground Assembly

Ref.	*Part Number*	*Qty.*	*Description*
1	122-0071	1	Cable-Battery, Positive
2	32180-030	2	Clip-Tie
3	121-8898	1	Cable-Battery, Negative
4	121-8897	1	Cable-Battery, Positive
5	54-3094	1	Cable
6	108-9470	1	Harness-Wire, Fusible Link
7	33004-00	2	Nut-HF

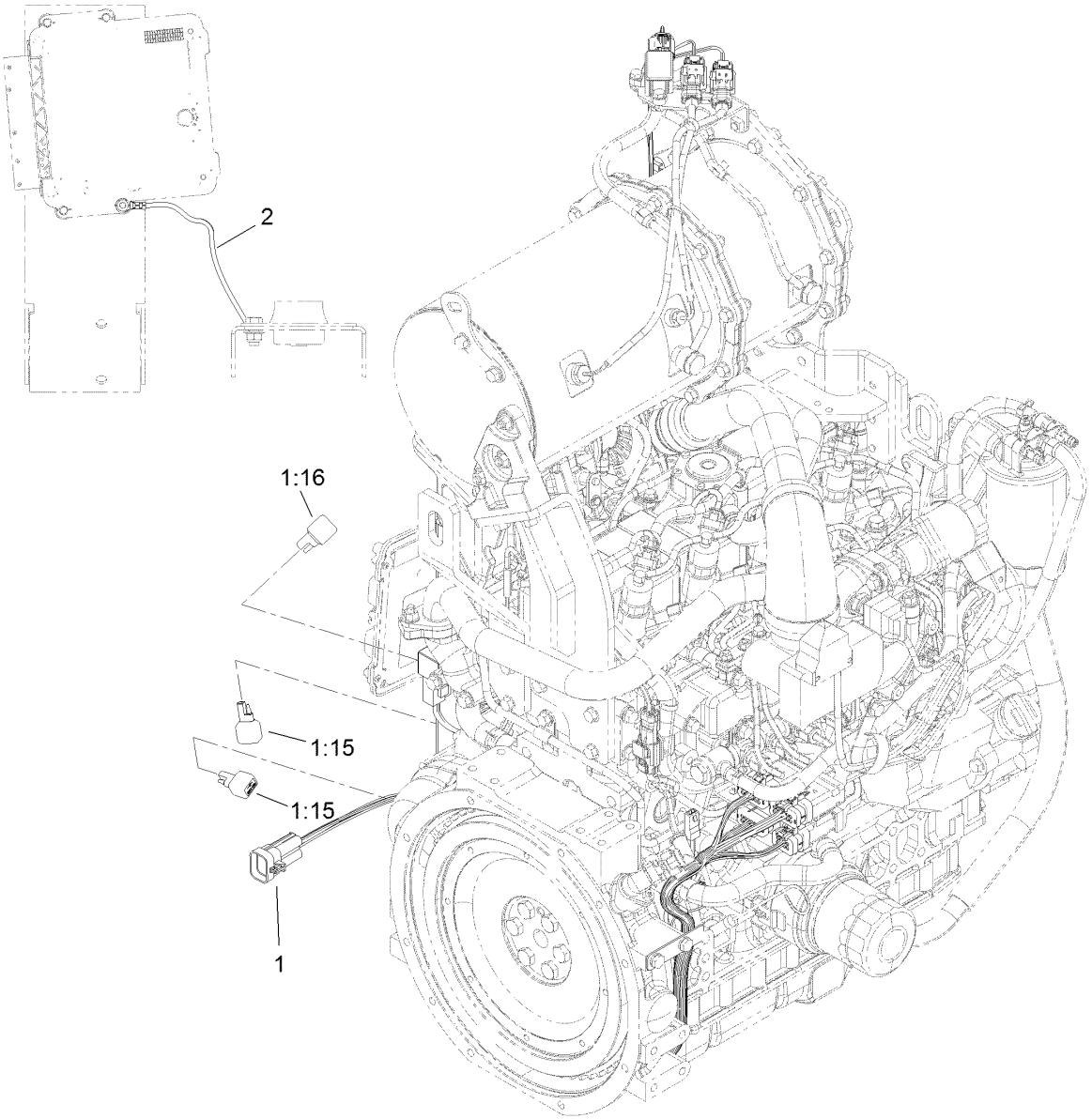

Engine Harness Assembly

Ref.	*Part Number*	*Qty.*	*Description*
1	122-0229	1	Harness-Wire, Engine
1:15	100-4918	2	Diode
1:16	121-8891	1	Resistor (1.6K Ohm)
2	122-0057	1	Harness-Wire, Ground

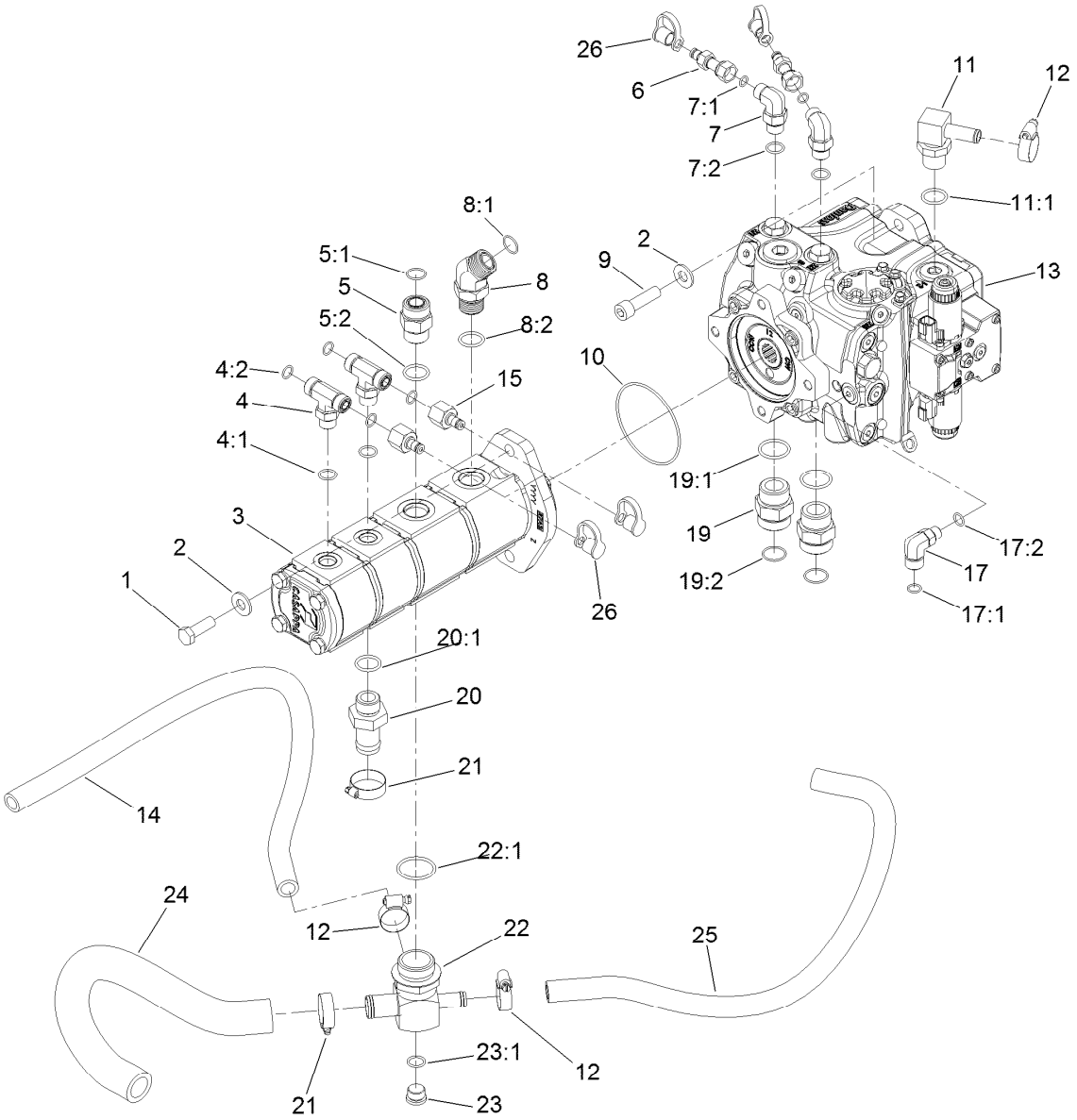

Piston Pump and Gear Pump Assembly

Ref.	Part Number	Qty.	Description
1	121-1525	2	Screw-HH
2	87-7270	4	Washer-Thrust
3	120-8904	1	4-Section Gear Pump ASM
4	340-157	2	Fitting-HYD, Tee
4:1	237-79	1	O-Ring
4:2	237-30	2	O-Ring
5	340-9	1	Fitting-STR
5:1	237-58	1	O-Ring
5:2	237-81	1	O-Ring
6	86-5480	2	Nipple-Test
7	340-18	2	Fitting-HYD, 90 DEG
7:1	237-79	1	O-Ring
7:2	237-22	1	O-Ring
8	100-5530	1	Fitting-45 DEG
8:1	237-58	1	O-Ring
8:2	237-81	1	O-Ring
9	131-0661	2	Screw-HSH
10	107-9447	1	O-Ring
11	136-4439	1	Fitting-HYD, 90
11:1	237-81	1	O-Ring

Ref.	Part Number	Qty.	Description
12	2412-129	3	Clamp-Hose
13	132-6100	1	Pump-Piston
14	121-1647	1	Hose-HYD
15	100-5616	2	Fitting
17	340-99	1	Fitting-HYD, 90 DEG
17:1	237-30	1	O-Ring
17:2	237-42	1	O-Ring
19	104-3797	2	Fitting-Straight
19:1	237-146	1	O-Ring
19:2	340-65	1	O-Ring
20	99-3017	1	Fitting
20:1	237-81	1	O-Ring
21	2412-34	2	Clamp-Hose
22	121-1682	1	Fitting-Tee
22:1	237-101	1	O-Ring
23	353-988	1	Plug-Hex
23:1	237-79	1	O-Ring
24	120-8815	1	Hose-Suction
25	120-9050	1	Hose-HYD
26	354-79	4	Cap-Dust

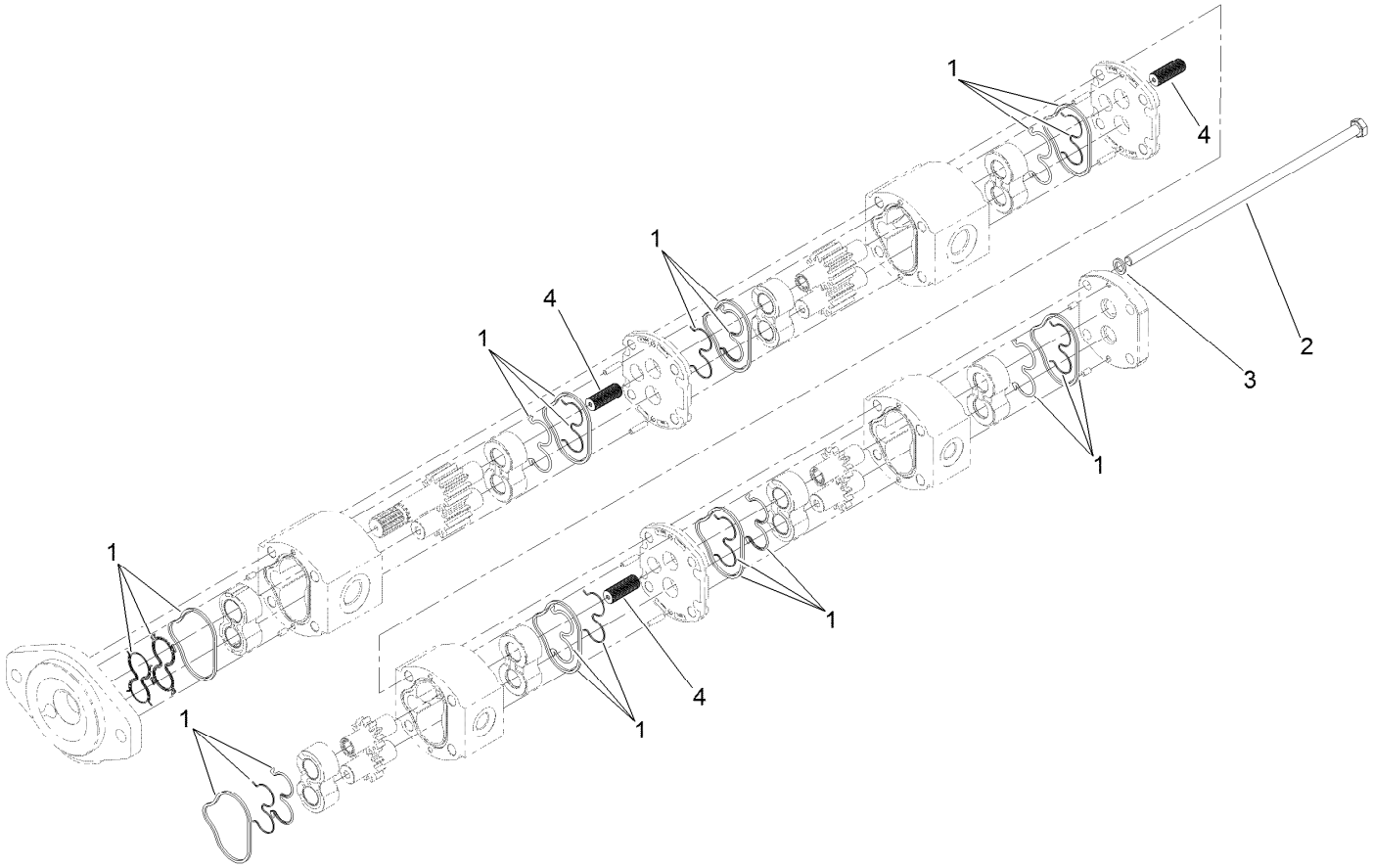

4-Section Gear Pump Assembly No. 120-8904

Ref.	*Part Number*	*Qty.*	*Description*
1	115-3776	1	Seal Kit
2	121-1721	4	Bolt
3	121-1722	4	Washer
4	120-6284	3	Hub-Connecting

Hydraulic Pump Assembly No. 132-6100

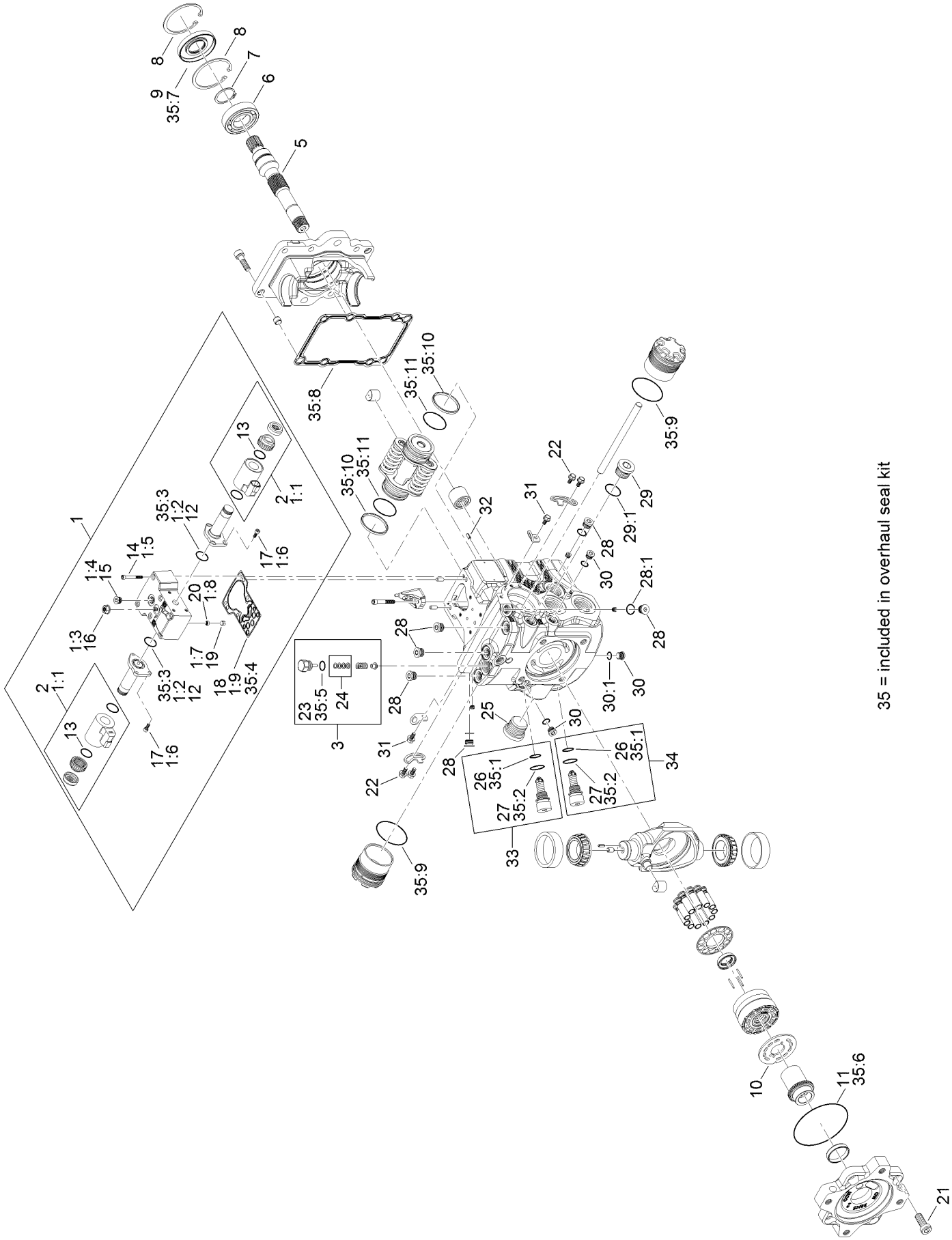

Hydraulic Pump Assembly No. 132-6100 (continued)

Ref.	Part Number	Qty.	Description
1	132-6203	1	Control Kit
1:1	132-6204	2	Coil Kit
1:2	125-5288	2	O-Ring
1:3	125-5273	1	Nut-Seal
1:4	125-5302	1	Plug
1:5	125-5274	6	Screw
1:6	125-5272	6	Screw
1:7	125-5269	1	Ring-Locking
1:8	125-5266	1	Screen
1:9	125-5283	1	Gasket-Control
2	132-6204	2	Coil Kit
3	136-4397	1	Charge Relief Kit
5	136-4399	1	Shaft
6	75-0460	1	Bearing-Ball
7	125-5280	1	Ring-Retaining
8	131-8616	2	Ring-Retaining
9	127-6214	1	Seal-Lip
10	136-4398	1	Valve Plate
11	132-6206	1	O-Ring
12	125-5288	2	O-Ring
13	131-7388	2	O-Ring
14	125-5274	6	Screw
15	125-5302	1	Plug
16	125-5273	1	Nut-Seal
17	125-5272	6	Screw
18	125-5283	1	Gasket-Control
19	125-5269	1	Ring-Locking
20	125-5266	1	Screen
21	125-5282	4	Screw
22	125-5270	4	Screw
23	125-5298	1	O-Ring
24	92-1353	1	Shim Kit
25	125-5301	1	Plug
26	75-0240	2	O-Ring
27	84-0560	2	O-Ring
28	69-3080	6	Plug
28:1		1	O-Ring ●
29	69-3130	1	Plug
29:1		1	O-Ring ●
30	75-0170	3	Plug-Thread, Straight
30:1	92-8777	1	O-Ring
31	125-5270	2	Screw
32	110-6485	1	Pin-Slotted
33	136-4393	1	Valve-Relief, High Pressure
34	136-4392	1	Valve-Relief, High Pressure
35	132-6205	1	Overhaul Seal Kit
35:1	75-0240	2	O-Ring
35:2	84-0560	2	O-Ring
35:3	125-5288	2	O-Ring
35:4	125-5283	1	Gasket-Control
35:5	125-5298	1	O-Ring
35:6	132-6206	1	O-Ring
35:7	127-6214	1	Seal-Lip
35:8		1	Gasket ●
35:9		2	O-Ring ●
35:10		2	Piston Ring ●
35:11		2	O-Ring ●

● Not serviced separately

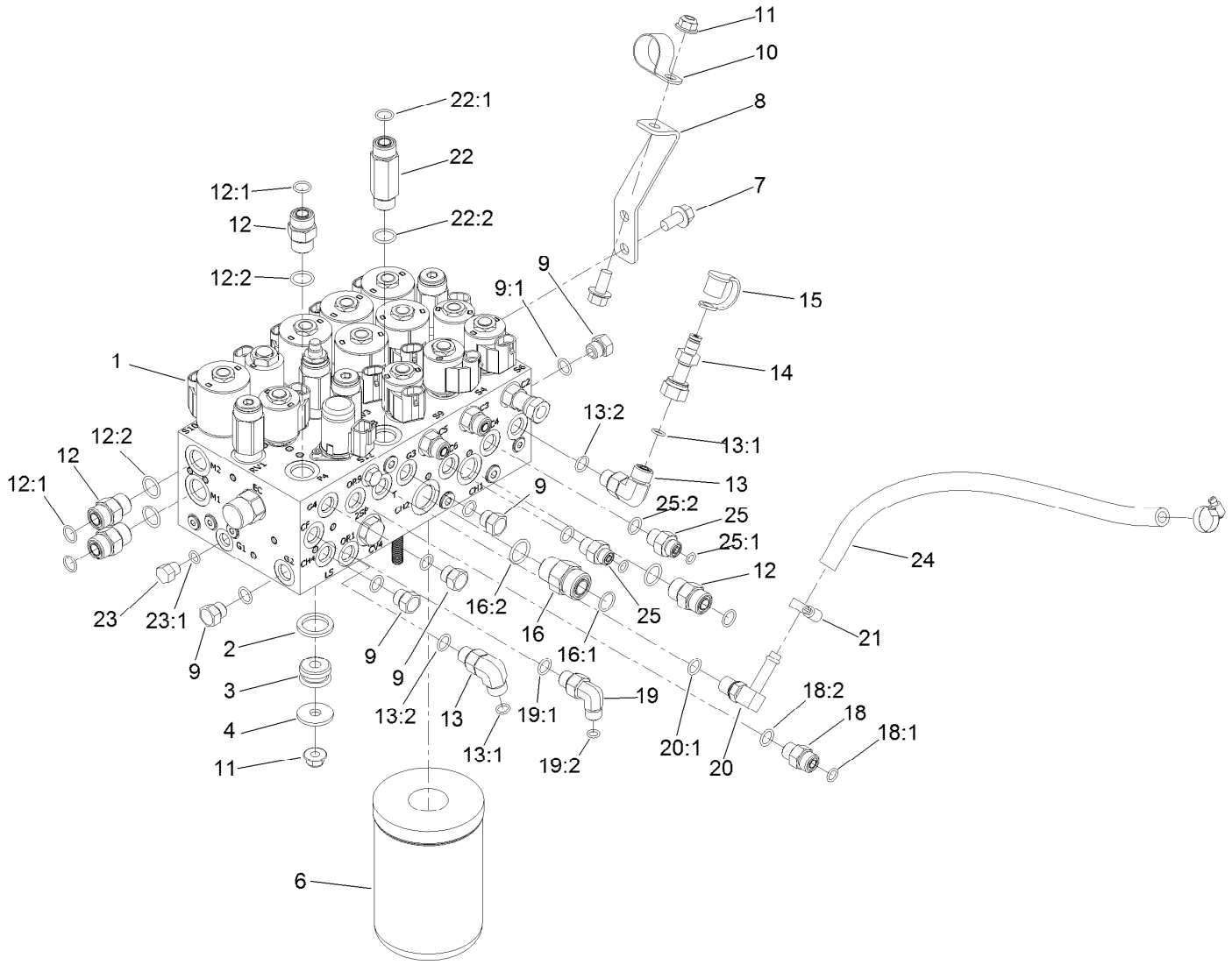

Combination Manifold Assembly

Ref.	Part Number	Qty.	Description
1	127-3650	1	HYD Combination Manifold ASM
2	92-2650	3	Spacer-Clutch
3	63-9750	3	Mount
4	63-8410	3	Washer
6	75-1310	1	Filter-HYD
7	3234-1	3	Screw-HHF
8	121-1542	1	Plate-Mount, Hose
9	353-508	5	Plug-HH
9:1	237-42	1	O-Ring
10	2412-126	1	R-Clamp
11	104-8301	4	Nut-HF, NI
12	340-4	4	Fitting-Straight
12:1	237-30	1	O-Ring
12:2	237-79	1	O-Ring
13	340-77	2	Fitting-Elbow, 90 DEG
13:1	237-22	1	O-Ring
13:2	237-42	1	O-Ring
14	86-5480	1	Nipple-Test
15	354-79	1	Cap-Dust
16	340-7	1	Fitting-Straight

Ref.	Part Number	Qty.	Description
16:1	237-65	1	O-Ring
16:2	237-80	1	O-Ring
18	340-2	1	Fitting-Straight
18:1	237-22	1	O-Ring
18:2	237-42	1	O-Ring
19	340-82	1	Fitting-Elbow, 90 DEG
19:1	237-42	1	O-Ring
19:2	237-21	1	O-Ring
20	100-4887	1	Fitting-Elbow, 90
20:1	237-42	1	O-Ring
21	2412-36	2	Clamp-Hose
22	119-4854	1	Fitting-STR
22:1	237-30	1	O-Ring
22:2	237-79	1	O-Ring
23	353-512	1	Plug
23:1	237-78	1	O-Ring
24	87-5730	1	Hose
25	340-1	2	Fitting-Straight
25:1	237-21	1	O-Ring
25:2	237-42	1	O-Ring

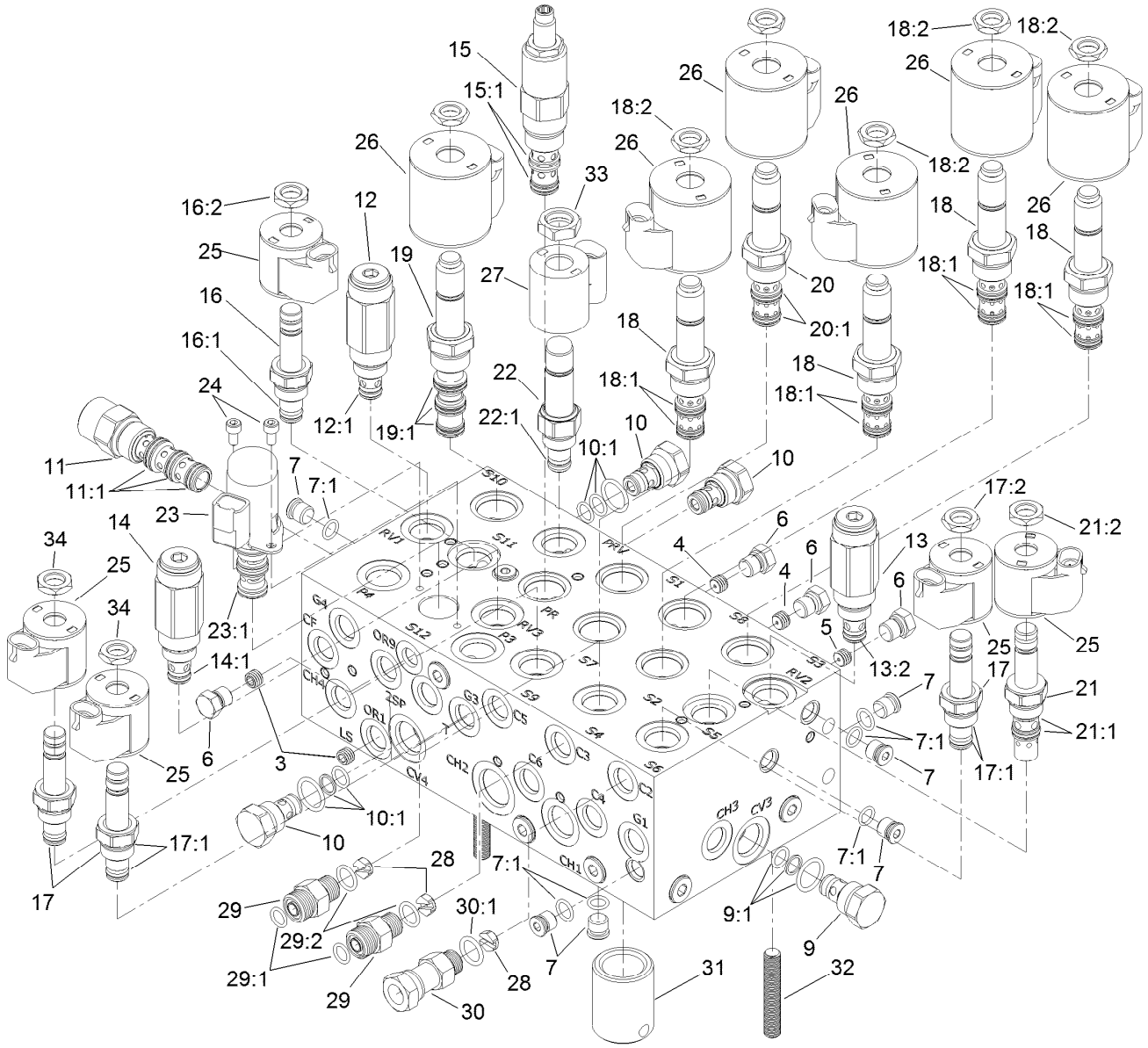

Combination Manifold Assembly No. 127-3650

Ref.	Part Number	Qty.	Description
3	136-4363	2	Orifice-0.028
4	112-6538	2	Orifice (.063 Inch)
5	110-8883	1	Plug-Orifice (0.040)
6	117-0115	4	Plug
7	353-990	14	Plug ASM
7:1	237-78	1	O-Ring
9	114-2873	1	Check Valve ASM
9:1	105-9156	1	Seal Kit
10	105-9321	3	Check Valve ASM
10:1	105-9156	1	Seal Kit
11	115-5409	1	Compensator ASM
11:1	110-8908	1	Spool Valve Seal Kit
12	125-7560	1	Relief Valve ASM
12:1	105-9156	1	Seal Kit
13	105-9844	1	Valve-Relief
13:2	105-9156	1	Seal Kit
14	125-7558	1	Relief Valve ASM
14:1	105-9156	1	Seal Kit

Ref.	Part Number	Qty.	Description
15	127-3663	1	Valve-Pressure Reducing
15:1	105-9154	1	Seal Kit
16	107-7516	1	Solenoid Valve ASM
16:1	105-9156	1	Seal Kit
16:2	110-2634	1	Nut-Coil
17	112-9206	3	Solenoid Valve ASM
17:1	105-9156	1	Seal Kit
17:2	110-2634	1	Nut-Coil
18	115-5400	4	Solenoid Valve ASM
18:1	107-7813	1	Seal Kit
18:2	110-2634	1	Nut-Coil
19	115-3023	1	Solenoid Valve ASM
19:1	110-8908	1	Spool Valve Seal Kit
20	125-7556	1	Solenoid Valve ASM
20:1	107-7813	1	Seal Kit
21	115-5405	1	Solenoid Valve ASM
21:1	115-5413	1	Seal Kit
21:2	110-2634	1	Nut-Coil

● Not illustrated

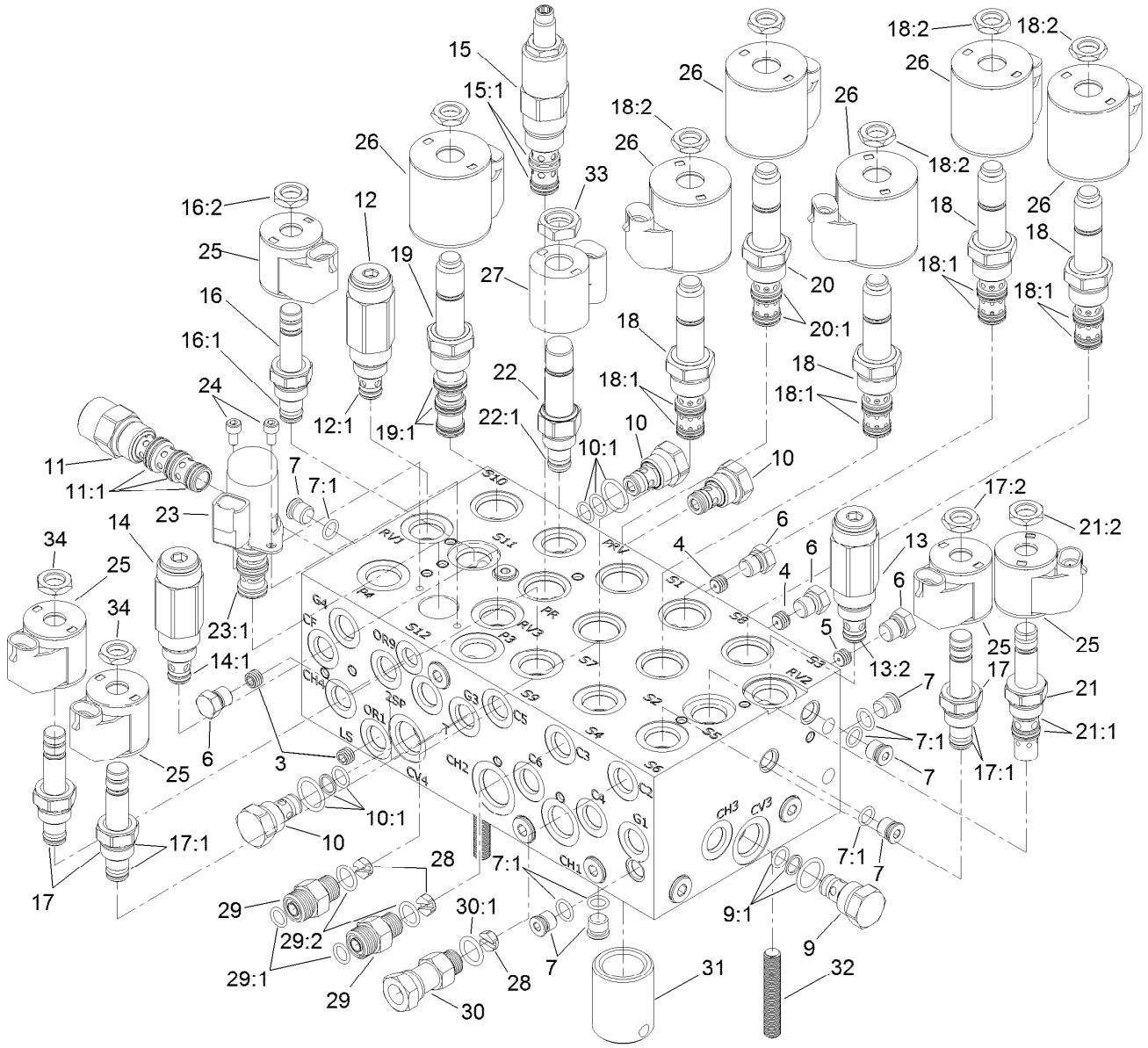

Combination Manifold Assembly No. 127-3650 (continued)

Ref.	Part Number	Qty.	Description
22	125-7555	1	Proportional Relief Valve ASM
22:1	110-6316	1	Seal Kit
23	125-7554	1	Valve-Solenoid
23:1	125-7561	1	Seal Kit ●
24	115-8733	2	Screw-HSH
25	110-0497	5	Coil-Solenoid
26	110-6344	6	Coil-12V, DC
27	125-7553	1	E-Coil, 12Vdc
28	125-7552	3	Orifice-Check, .070 DIA

Ref.	Part Number	Qty.	Description
29	340-2	2	Fitting-Straight
29:1	237-22	1	O-Ring
29:2	237-42	1	O-Ring
30	104-3779	1	Connector-Swivel, Straight
30:1	237-42	1	O-Ring
31	125-7551	1	Nipple-Filter
32	130-2661	3	Stud-Manifold
33	125-7550	1	Nut-Coil
34	110-2634	11	Nut-Coil

● Not illustrated

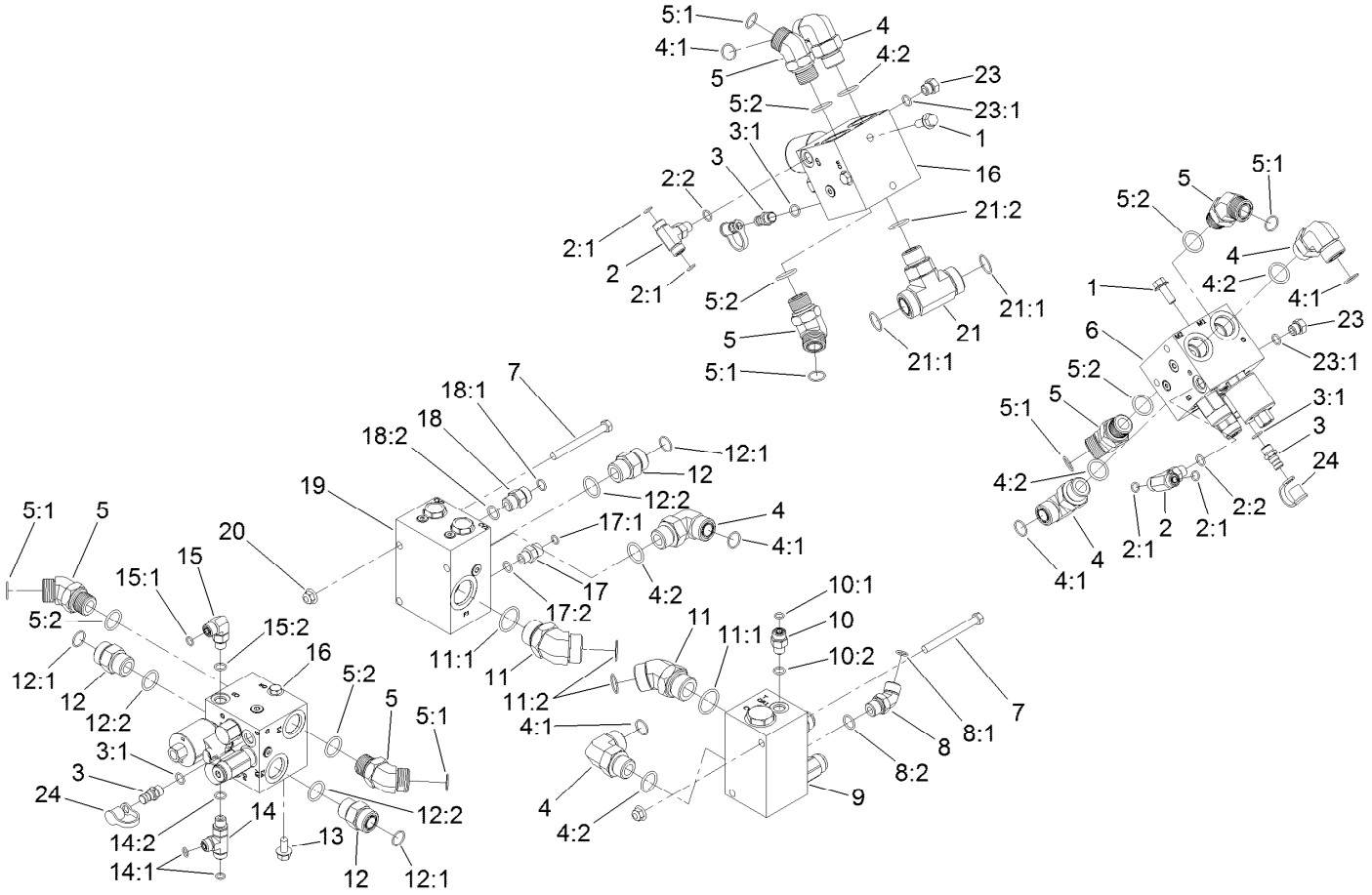

Manifold Block Assembly

Ref.	Part Number	Qty.	Description
1	3234-11	4	Screw-HHF
2	340-94	2	Adapter
2:1	237-22	2	O-Ring
2:2	237-42	1	O-Ring
3	59-7410	3	Fitting-Diagnostic
3:1	237-42	1	O-Ring
4	340-142	5	Fitting-Elbow, 90 DEG
4:1	237-58	1	O-Ring
4:2	237-81	1	O-Ring
5	100-5530	6	Fitting-45 DEG
5:1	237-58	1	O-Ring
5:2	237-81	1	O-Ring
6	131-1249	1	Manifold-PTO, Left
7	323-42	4	Screw-HH
8	340-101	1	Fitting-HYD, 45 DEG
8:1	237-30	1	O-Ring
8:2	237-79	1	O-Ring
9	121-1530	1	Manifold-Traction, Rear
10	340-2	1	Fitting-Straight
10:1	237-22	1	O-Ring
10:2	237-42	1	O-Ring

Ref.	Part Number	Qty.	Description
11	104-3509	2	Fitting-HYD, 45 DEG
11:1	237-146	1	O-Ring
11:2	340-65	1	O-Ring
12	340-9	3	Fitting-STR
12:1	237-58	1	O-Ring
12:2	237-81	1	O-Ring
13	3234-1	2	Screw-HHF
14	340-86	1	Fitting-Tee
14:1	237-22	2	O-Ring
14:2	237-42	1	O-Ring
15	340-77	1	Fitting-Elbow, 90 DEG
15:1	237-22	1	O-Ring
15:2	237-42	1	O-Ring
16	131-1248	2	Center And Right PTO Manifold ASM
17	92-9258	1	Adapter-Check
17:1	237-22	1	O-Ring
17:2	237-42	1	O-Ring
18	100-4890	1	Fitting-Check
18:1	237-79	1	O-Ring
18:2	237-30	1	O-Ring

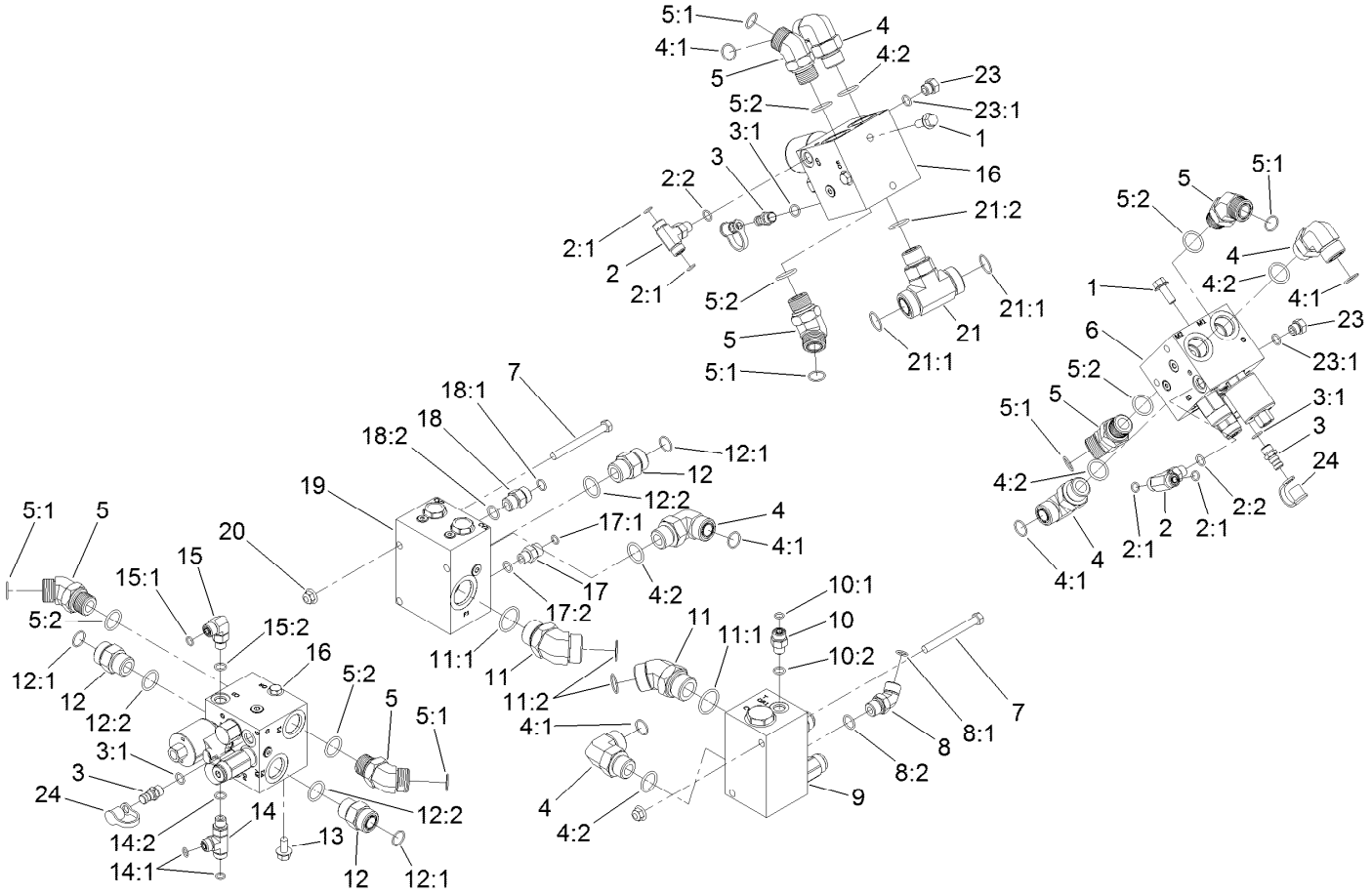

Manifold Block Assembly (continued)

Ref.	Part Number	Qty.	Description
19	121-1550	1	Flow Divider Manifold ASM
20	104-8301	4	Nut-HF, NI
21	120-8825	1	Fitting-Tee
21:1	340-65	2	O-Ring

Ref.	Part Number	Qty.	Description
21:2	237-81	1	O-Ring
23	353-508	2	Plug-HH
23:1	237-42	1	O-Ring
24	354-79	3	Cap-Dust

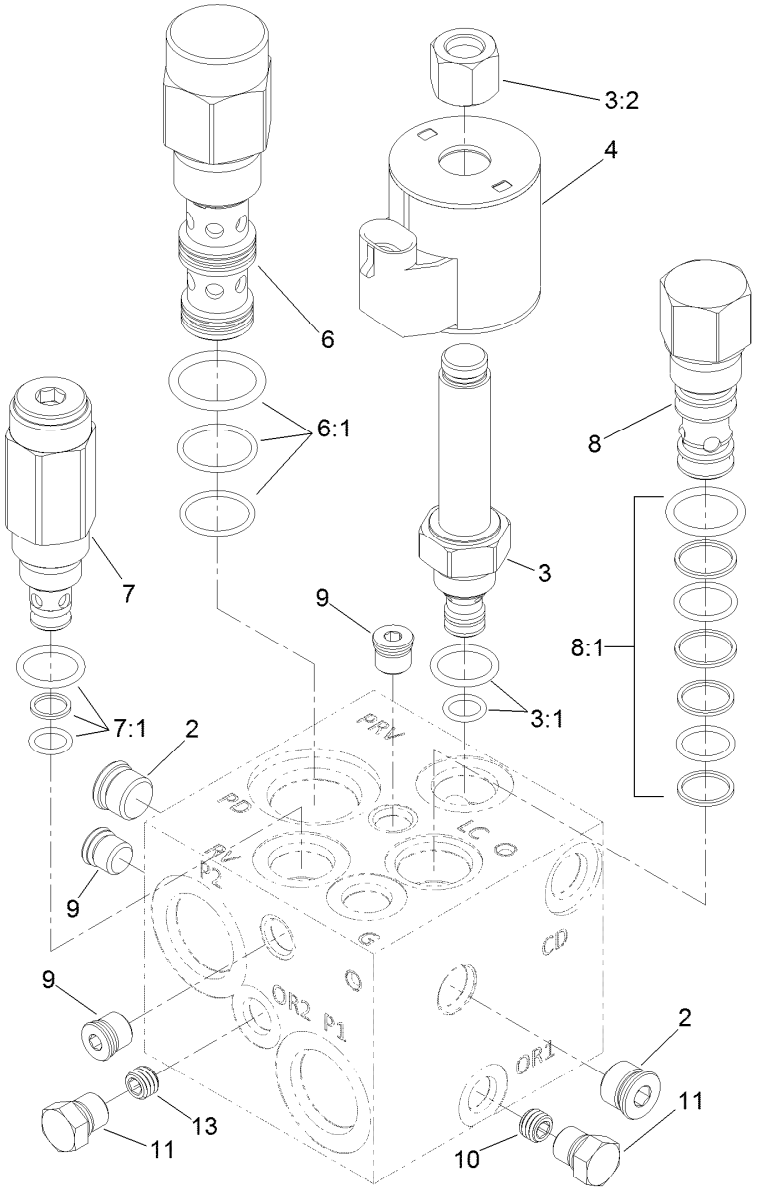

Left PTO Manifold Assembly No. 131-1249

Ref.	*Part Number*	*Qty.*	*Description*
2	112-9213	2	Plug
3	117-0227	1	Valve-Relief, Proportional
3:1	105-9156	1	Seal Kit
3:2	119-2160	1	Nut-Coil
4	110-6344	1	Coil-12V, DC
6	125-4327	1	Valve-Directional, Pilot
6:1	114-5515	1	Seal Kit
7	114-5512	1	Valve-Relief, 600 PSI
7:1	105-9156	1	Seal Kit ●
8	105-9153	1	Element-Logic, Vented
8:1	119-2159	1	Seal Kit ●
9	112-9212	3	Plug
10	117-8315	1	Orifice (.025 Inch)
11	117-0115	2	Plug
13	112-6538	1	Orifice (.063 Inch)

● Not illustrated

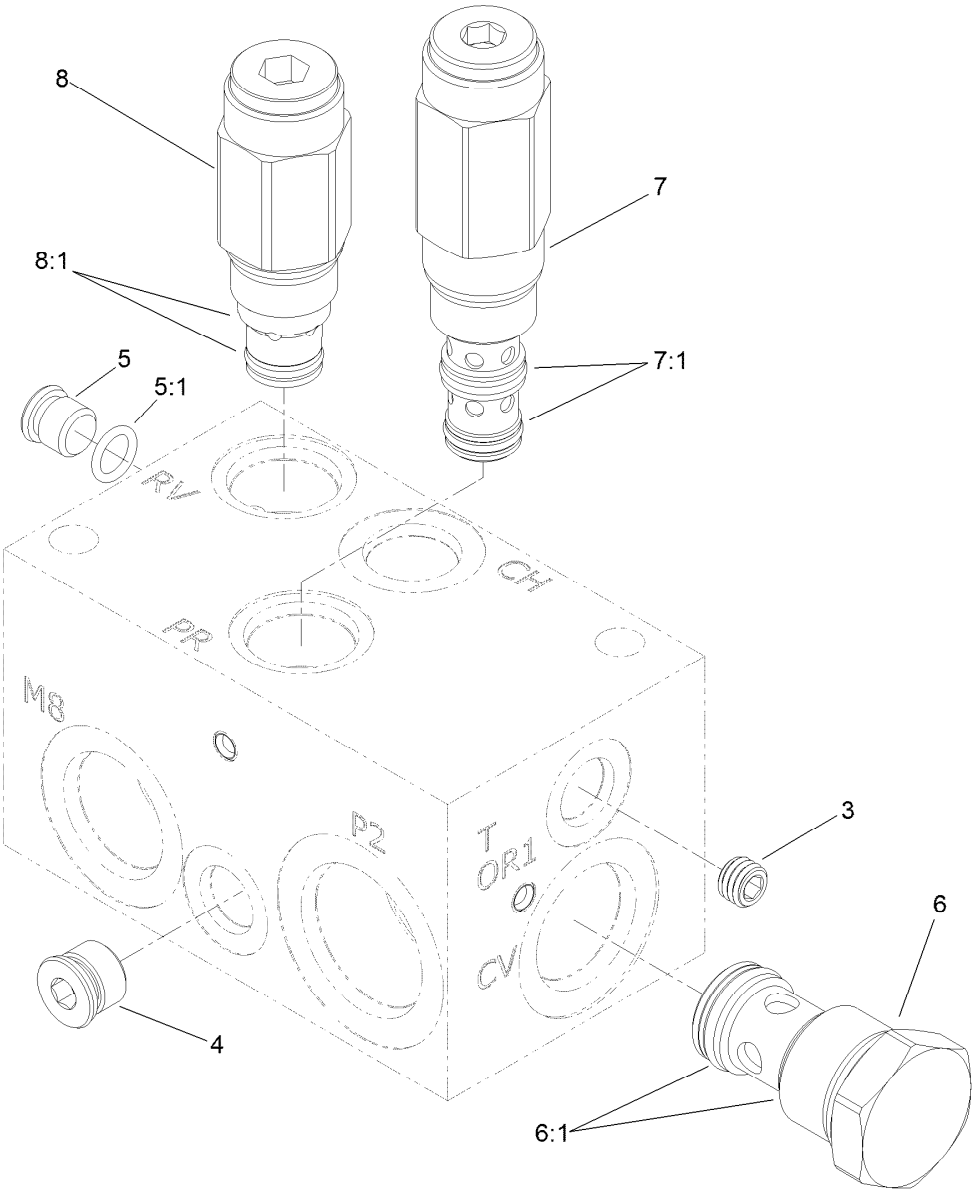

Rear Traction Manifold Assembly No. 121-1530

Ref.	*Part Number*	*Qty.*	*Description*
3	110-0495	1	Plug-Orifice (0.050 Inch)
4		1	Plug ●
5	353-990	1	Plug ASM
5:1	237-78	1	O-Ring
6	125-4328	1	Valve-Check
6:1	125-4336	1	Seal Kit
7	136-4362	1	Valve-Reducing
7:1	136-4361	1	Seal Kit
8	125-4331	1	Valve-Relief
8:1	110-6316	1	Seal Kit

● Not serviced separately

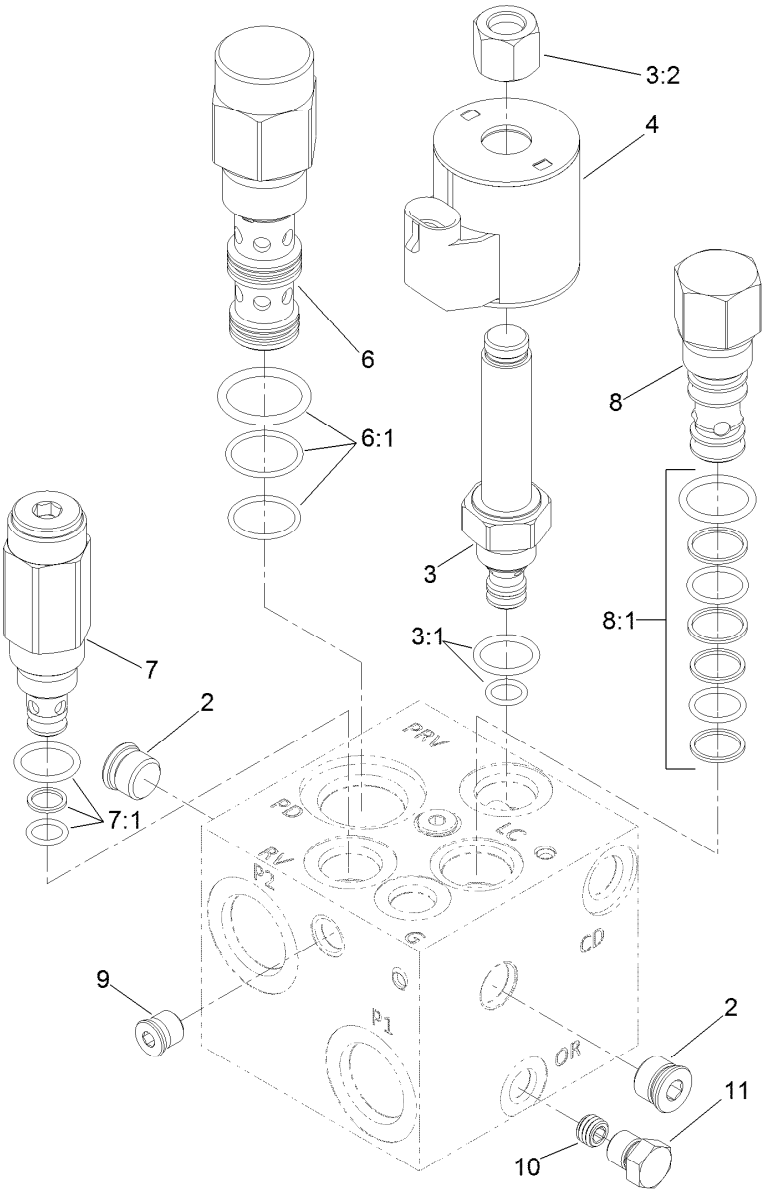

Center and Right PTO Manifold Assembly No. 131-1248

Ref.	Part Number	Qty.	Description
2	112-9213	2	Plug
3	117-0227	1	Valve-Relief, Proportional
3:1	105-9156	1	Seal Kit
3:2	119-2160	1	Nut-Coil
4	110-6344	1	Coil-12V, DC
6	125-4327	1	Valve-Directional, Pilot
6:1	114-5515	1	Seal Kit
7	114-5512	1	Valve-Relief, 600 PSI
7:1	105-9156	1	Seal Kit ●
8	105-9153	1	Element-Logic, Vented
8:1	119-2159	1	Seal Kit ●
9	112-9212	3	Plug
10	117-8315	1	Orifice (.025 Inch)
11	117-0115	1	Plug

● Not illustrated

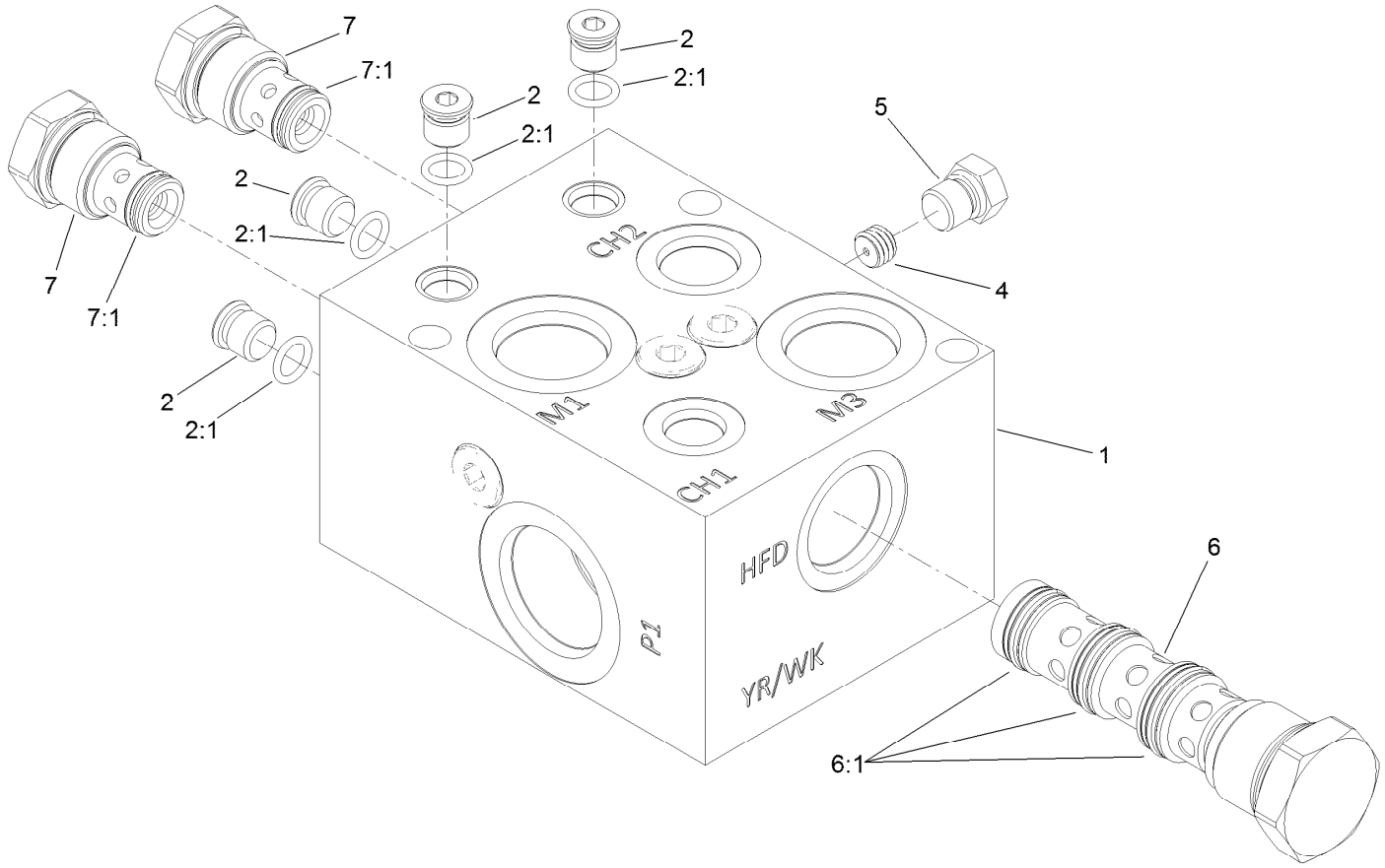

Flow Divider Manifold Assembly No. 121-1550

Ref.	*Part Number*	*Qty.*	*Description*
1		1	Manifold Block ●
2	353-990	4	Plug ASM
2:1	237-78	1	O-Ring
4	112-6538	1	Orifice (.063 Inch)
5	117-0115	1	Plug
6	125-4332	1	Valve-Flow Divider
6:1	125-4338	1	Seal Kit
7	125-4333	2	Valve-Check
7:1	125-4337	1	Seal Kit

● Not serviced separately

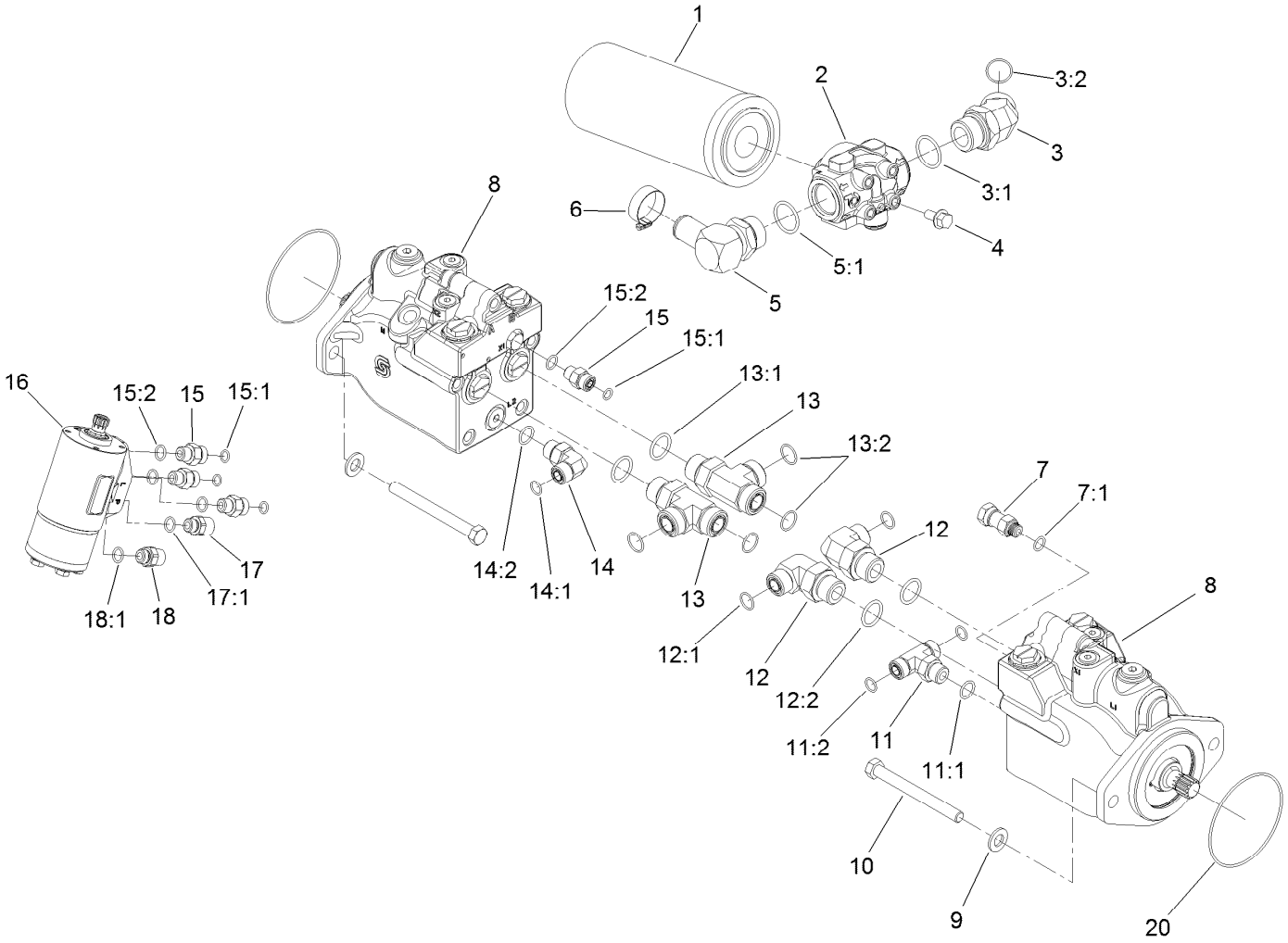

Drive Motor, Steer Valve and Filter Head Assembly

Ref.	Part Number	Qty.	Description
1	94-2621	1	Element-Filter
2	121-1577	1	Head-Filter
3	104-3509	1	Fitting-HYD, 45 DEG
3:1	237-146	1	O-Ring
3:2	340-65	1	O-Ring
4	3234-1	4	Screw-HHF
5	23-8910	1	Stem-Barb-90
5:1	237-146	1	O-Ring
6	2412-34	1	Clamp-Hose
7	104-3779	1	Connector-Swivel, Straight
7:1	237-42	1	O-Ring
8	120-8812	2	HYD Motor ASM
9	106-9888	4	Washer-Flat
10	33116-120	4	Screw-HH
11	340-157	1	Fitting-HYD, Tee
11:1	237-79	1	O-Ring
11:2	237-30	2	O-Ring
12	340-139	2	Fitting-Elbow 90

Ref.	Part Number	Qty.	Description
12:1	237-81	1	O-Ring
12:2	237-65	1	O-Ring
13	340-148	2	Fitting-Tee
13:1	237-81	1	O-Ring
13:2	237-58	2	O-Ring
14	340-98	1	Fitting-Elbow, 90 DEG
14:1	237-79	1	O-Ring
14:2	237-30	1	O-Ring
15	340-2	4	Fitting-Straight
15:1	237-22	1	O-Ring
15:2	237-42	1	O-Ring
16	132-6256	1	Valve-Steer
17	120-8979	1	Fitting-Straight
17:1	237-42	1	O-Ring
18	120-8975	1	Fitting-Straight
18:1	237-42	1	O-Ring
20	237-166	2	O-Ring

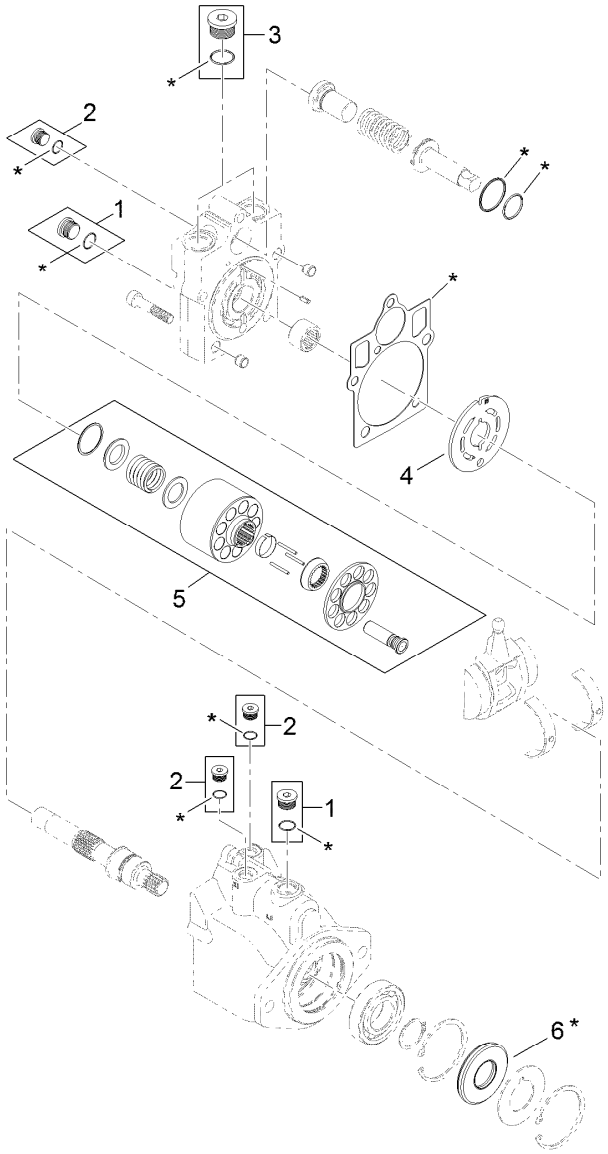

7 = all items with * are included in overhaul seal kit

Hydraulic Motor Assembly No. 120-8812

Ref.	*Part Number*	*Qty.*	*Description*
1	67-9090	2	Plug
2	75-0070	3	Plug
3	107-4352	1	Plug
4	121-1734	1	Plate-Valve
5	121-1735	1	Cylinder Block Kit
6	69-3190	1	Seal-Lip
7	121-1736	1	Overhaul Seal Kit

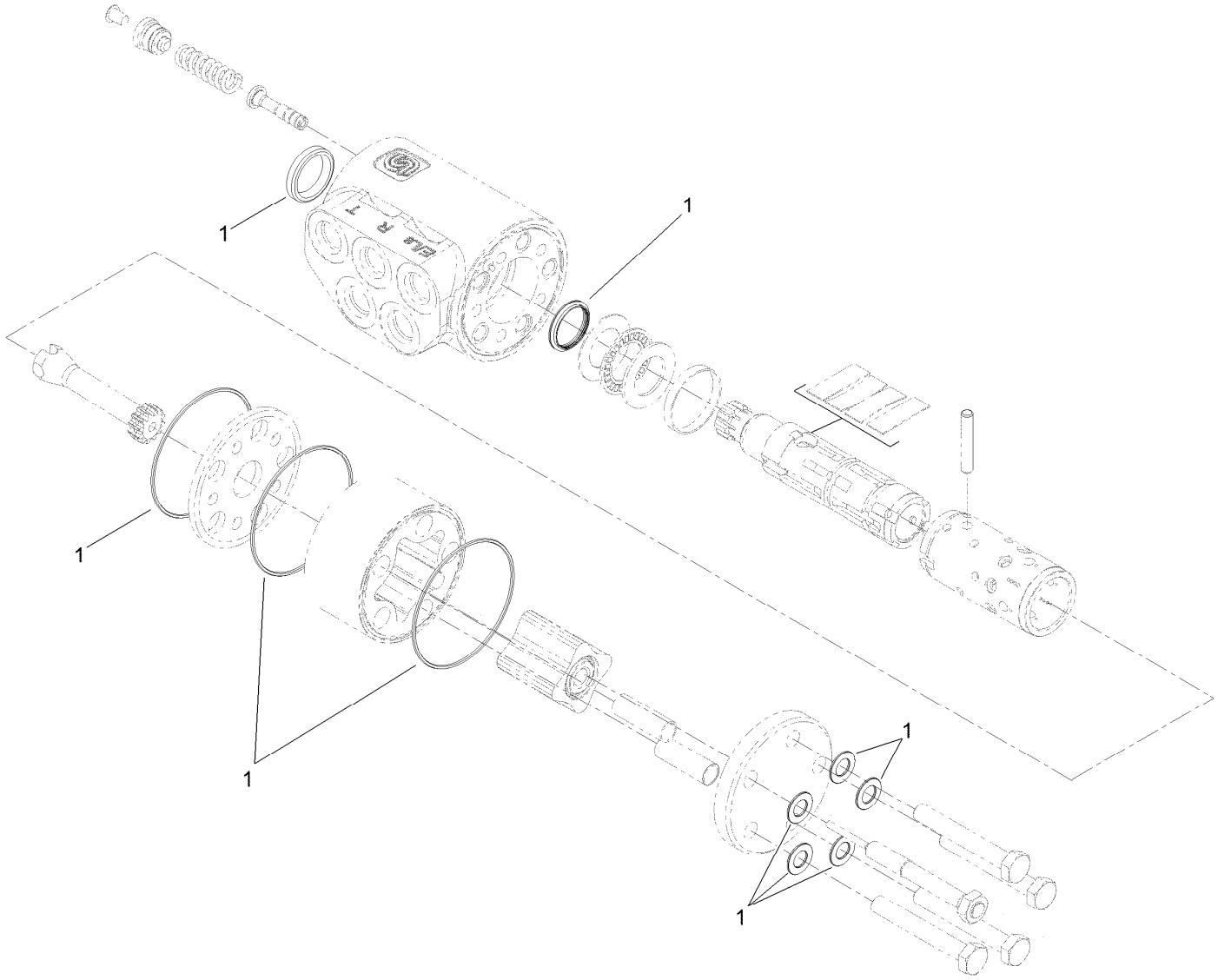

Steering Valve Assembly No. 132-6256

Ref.	*Part Number*	*Qty.*	*Description*
1	106-6716	1	Seal Kit

Lift, Steer and Fan Hydraulic Assembly

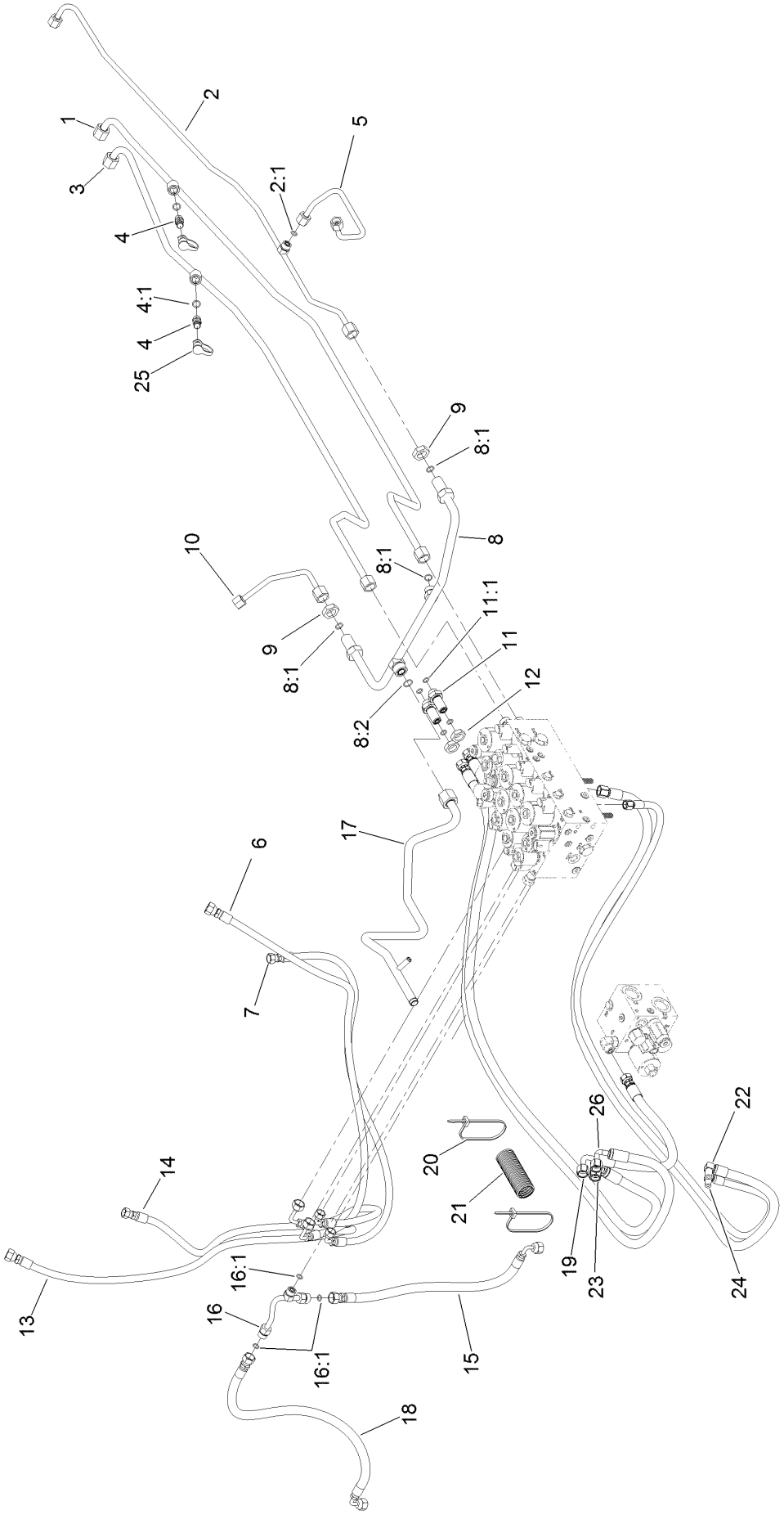

Lift, Steer and Fan Hydraulic Assembly (continued)

Ref.	Part Number	Qty.	Description
1	120-9074	1	Tube-Fan
2	120-8966	1	Tube-Drain, Fan
2:1	237-22	1	O-Ring
3	120-9075	1	Tube-Fan
4	59-7410	2	Fitting-Diagnostic
4:1	237-42	1	O-Ring
5	132-6145	1	Tube-HYD
6	127-3737	1	Hose-HYD
7	127-3738	1	Hose-HYD
8	121-1509	1	Tube-HYD
8:1	237-30	3	O-Ring
8:2	237-65	1	O-Ring
9	340-127	2	Nut-Bulkhead
10	132-6146	1	Tube-HYD
11	340-71	2	Fitting-Straight, Bulkhead
11:1	237-22	2	O-Ring

Ref.	Part Number	Qty.	Description
12	340-70	2	Nut-Lock
13	127-3736	1	Hose-HYD
14	100-3833	1	Hose-HYD
15	121-1567	1	Hose-HYD
16	121-1565	1	Tube-Tee
16:1	237-22	3	O-Ring
17	121-1510	1	Tube-HYD
18	121-1566	1	Hose-HYD
19	86-2440	1	Hose-HYD
20	3290-378	7	Tie-Cable
21	121-1544	3	Cover-Hose
22	121-1504	1	Hose-HYD
23	127-9632	1	Hose-HYD
24	121-1503	1	Hose-HYD
25	354-79	2	Cap-Dust
26	114-7702	1	Hose-HYD

Traction Hydraulic Assembly

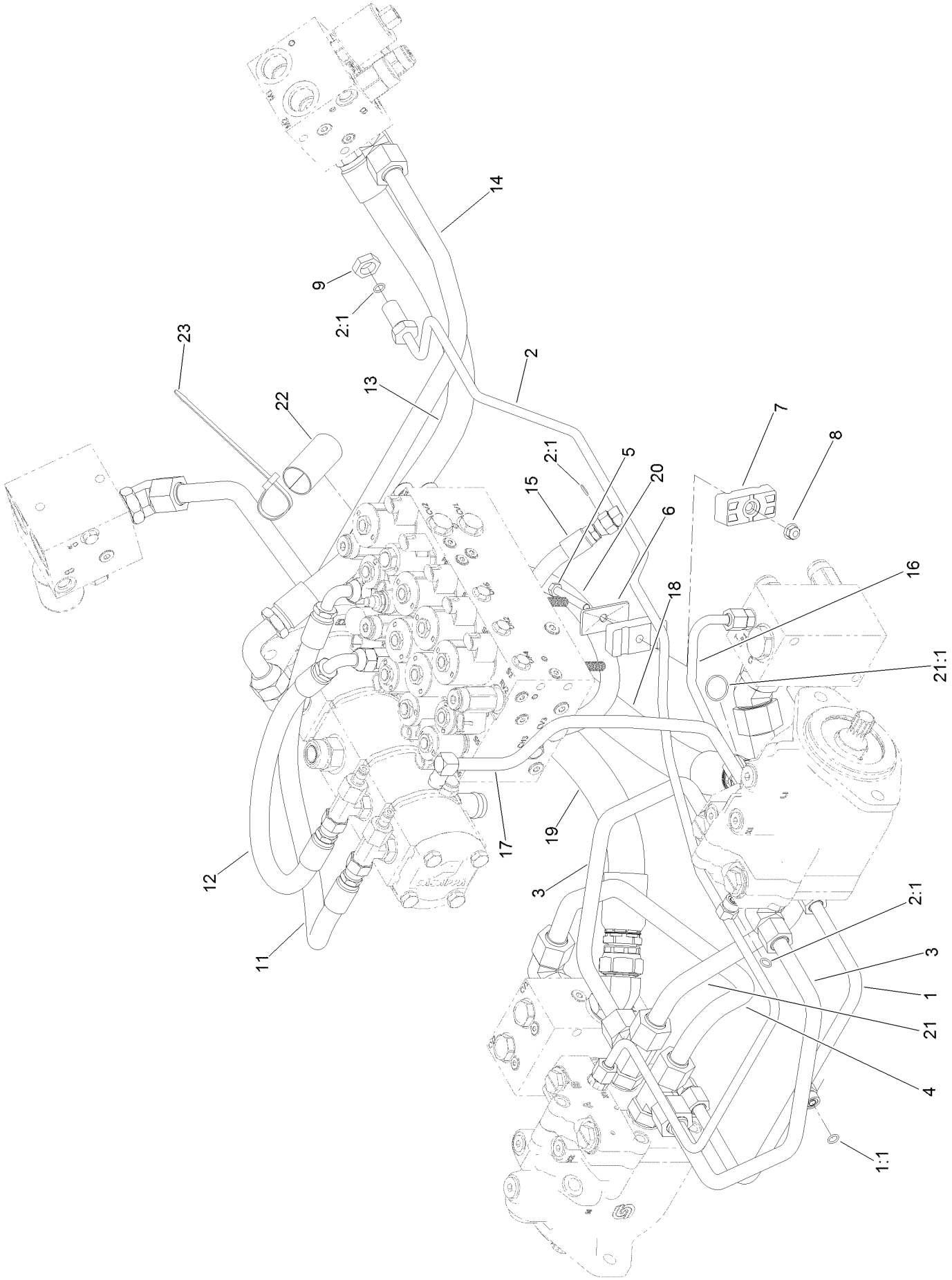

Traction Hydraulic Assembly (continued)

Ref.	Part Number	Qty.	Description
1	120-9080	1	Tube ASM
1:1	237-22	1	O-Ring
2	121-1552	1	Tube ASM
2:1	237-22	3	O-Ring
3	120-9079	2	Tube-HYD
4	121-1546	1	Tube-HYD
5	322-11	1	Screw-HH
6	69-9761	1	Plate-Cover
7	120-3200	2	Clamp-Tube
8	104-8300	1	Nut-HF, NI
9	340-70	1	Nut-Lock
11	104-2807	1	Hose-HYD
12	104-4584	1	Hose-HYD
13	115-4384	1	Hose-HYD
14	120-8834	1	Tube-PTO, LH To RH
15	104-2234	1	Hose-HYD
16	121-1480	1	Tube-HYD
17	120-8961	1	Tube-Return, Front
18	132-6142	1	Hose-HYD
19	132-6141	1	Hose-HYD
20	132-6241	1	Hose-HYD
21	121-1581	1	Tube-Tee
21:1	340-65	1	O-Ring
22	AU112950	1	Protector-Hose
23	3290-378	3	Tie-Cable

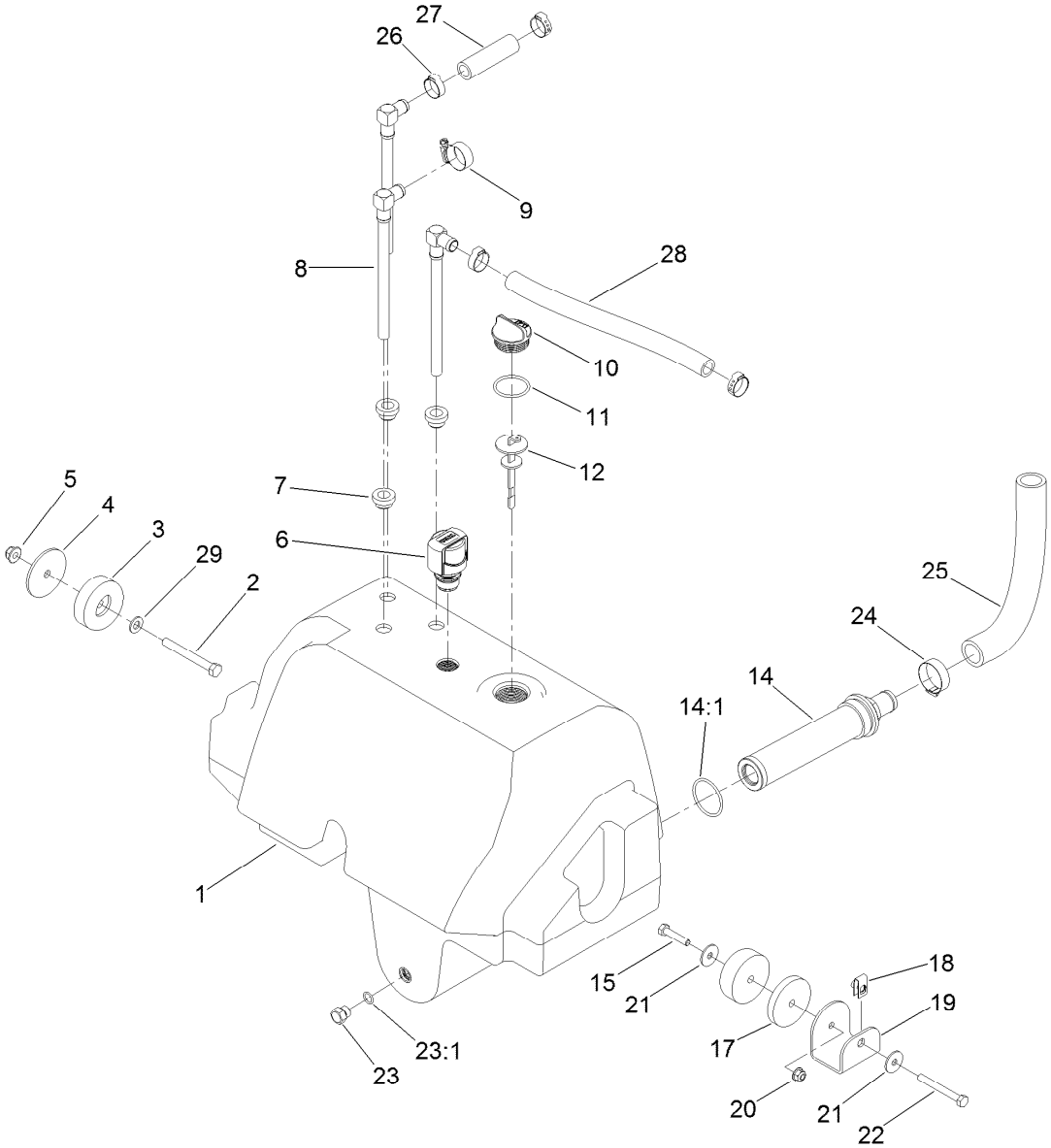

Hydraulic Reservoir Assembly

Ref.	Part Number	Qty.	Description
1	120-9077	1	Reservoir-HYD
2	323-20	1	Screw-HH
3	108-1605	2	Bumper-Recess
4	121-1456	1	Spacer-Thin
5	104-8301	1	Nut-HF, NI
6	115-9793	1	Breather
7	104-0790	3	Bushing
8	114-0002	3	Pipe-Stand
9	2412-129	1	Clamp-Hose
10	93-7498	1	Plug-Plastic
11	237-101	1	O-Ring
12	112-6365	1	Dipstick
14	104-7546	1	Tank Strainer ASM
14:1	340-136	1	O-Ring
15	322-7	1	Screw-HH

Ref.	Part Number	Qty.	Description
17	121-1533	1	Spacer-Thick
18	115-7721	1	Nut-Clip, U
19	121-1557-03	1	Mount-Tank
20	104-8300	1	Nut-HF, NI
21	3256-82	2	Washer-Flat
22	322-13	1	Screw-HH
23	353-508	1	Plug-HH
23:1	237-42	1	O-Ring
24	2412-34	1	Clamp-Hose
25	120-8810	1	Hose-Strainer
26	115-5436	4	Clamp-Hose, Crimp
27	114-4920	1	Hose
28	121-1521	1	Hose
29	3256-24	1	Washer-Plain

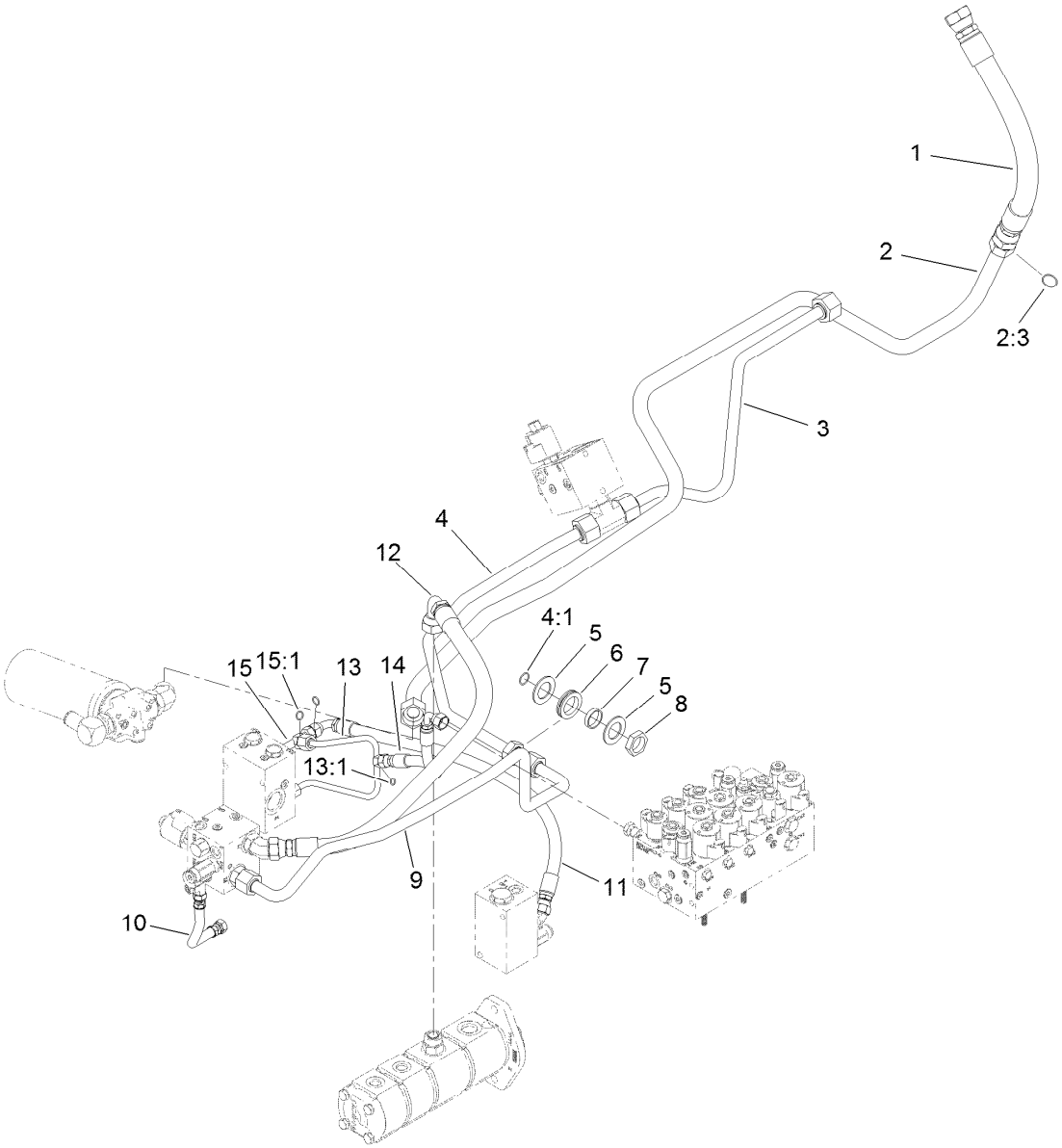

Oil Cooler Hydraulic Assembly

Ref.	Part Number	Qty.	Description
1	120-9060	1	Hose-HYD
2	121-1612	1	Tube ASM
2:3	340-65	1	O-Ring
3	121-1626	1	Tube-HYD
4	121-1507	1	Tube ASM
4:1	237-58	1	O-Ring
5	69-8910	2	Washer
6	240-7	1	Grommet-Rubber
7	69-8900	1	Spacer
8	340-126	1	Nut-Bulkhead

Ref.	Part Number	Qty.	Description
9	120-8838	1	Tube-PTO, Front Return
10	121-1572	1	Hose-HYD
11	121-1559	1	Hose-HYD
12	115-4384	1	Hose-HYD
13	121-1584	1	Tube-HYD
13:1	237-22	1	O-Ring
14	121-1583	1	Hose-HYD
15	121-1558	1	Fitting-Tee
15:1	237-30	2	O-Ring

Armrest Control Panel Assembly

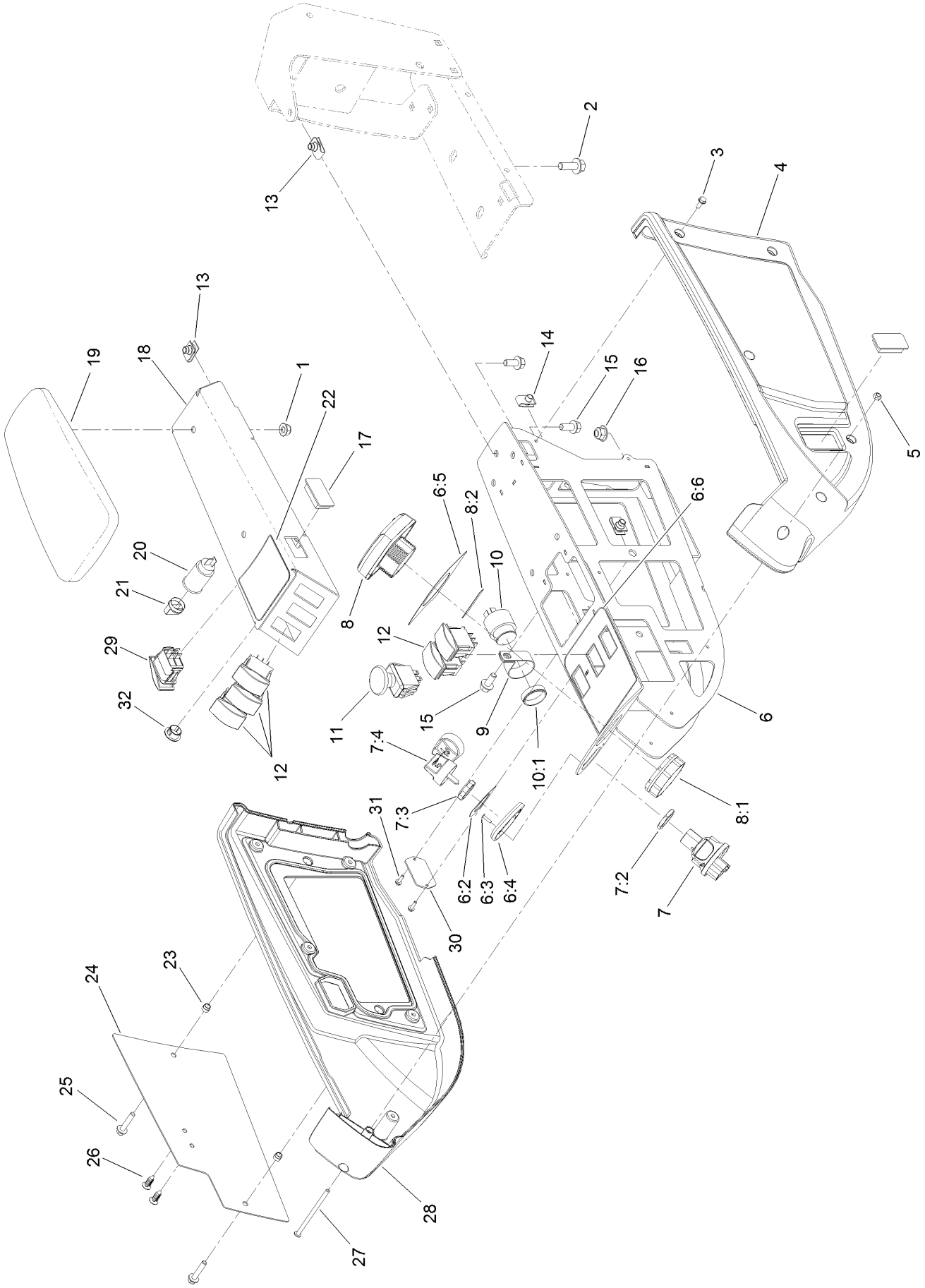

Armrest Control Panel Assembly (continued)

Ref.	Part Number	Qty.	Description
1	104-8300	2	Nut-HF, NI
2	3234-42	2	Screw-HHF
3	32144-112	10	Screw-HWH
4	108-7604	1	Cover-LH
5	3296-12	1	Nut-Lock, NI
6	120-4155	1	Panel ASM
6:2	121-3884	1	Decal-Console, Upper
6:3	3269-17	2	Rivet-Pop
6:4	121-3889	1	Step-Elevated, Switch
6:5	121-3887	1	Decal-Console, Display
6:6	120-4159	1	Decal-Console, Lower
7	121-5159	1	Switch-Ignition
7:2	121-5160	1	Nut-Hex
7:3	121-5161	1	Nut-Face
7:4	121-5162	1	Set-Key, Ignition
8	120-6310	1	LCD Display ASM Kantrak 1700
8:1	120-4630	1	Nut-Display
8:2	120-6311	1	Decal-Display
9	2412-74	1	R-Clamp
10	80-9330	1	Audio Alarm ASM
10:1	104-5107	1	Nut-Plastic, Knurled
11	93-9999	1	Switch-PTO
12	100-1535	5	Switch-Rocker, (On)-Off-(On)
13	94-2413	6	Nut-U
14	107069	2	Clip
15	3234-5	6	Screw-HHF
16	104-8301	2	Nut-HF, NI
17	99-7420	2	Plug-Hole
18	136-4389-03	1	Panel-Control
19	108-7602	1	Rest-Arm
20	99-7411	1	Point-Power
21	99-7416	1	Cap
22	127-3700	1	Decal-Lift
23	110-0542	2	Spacer-Flange
24	115-8849-03	1	Plate-Cover
25	3234-21	2	Screw-HHF
26	114-4899	2	Rivet-Push
27	3250-22	1	Screw-PPH
28	108-7605	1	Cover-RH
29	114-3329	1	Switch-Rocker
30	121-1630	1	Plate-Cover
31	32144-18	2	Screw-HWH
32	94-5627	1	Plug

Cab, Tool Box and Flooring Assembly

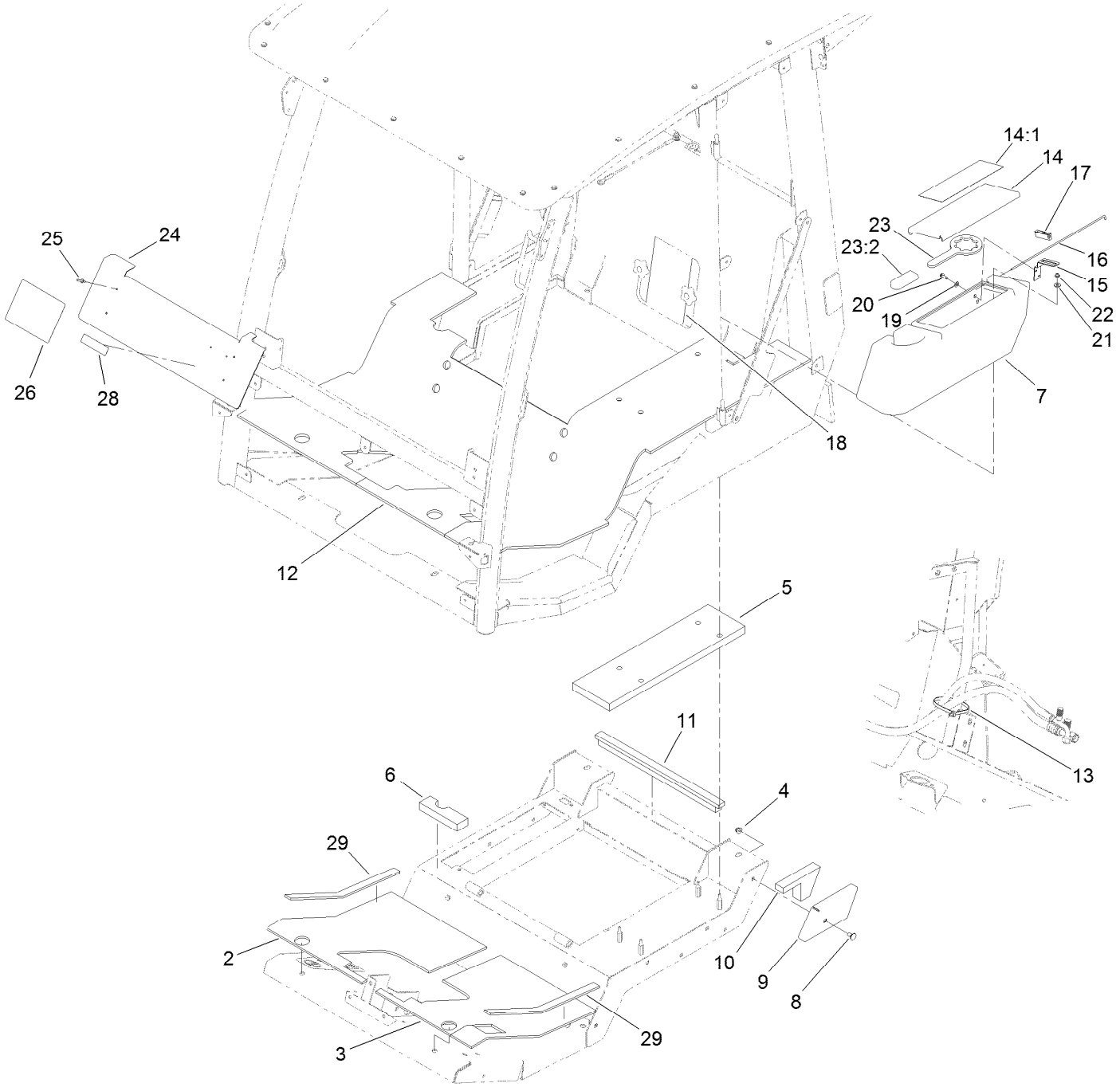

Cab, Tool Box and Flooring Assembly (continued)

Ref.	Part Number	Qty.	Description
2	136-2167	1	Tread-Floor, RH
3	136-2166	1	Tread-Floor, LH
4	104-8301	1	Nut-HF, NI
5	136-2124	1	Foam-Fill, LH
6	136-2125	1	Foam-Fill, RH
7	120-4125	1	Housing-Tool Box
8	3231-1	1	Screw-CARR
9	130-5747-03	1	Cover-Mount
10	127-9861	1	Foam-Corner
11	121-8548	1	Foam-Seal, Rear
12	136-2122	1	Tread-Floor
13	3334-945	1	Tie-Cable
14	120-4124	1	Tool Box Cover ASM
14:1	117-2766	1	Decal-Warning, CE
14:1	117-2754	1	Decal-Warning
15	104-7545	1	Bracket-Latch
16	120-4122	1	Rod-Hinge
17	58-4250	1	Catch-Magnetic
18	130-6046	1	Decal-Service
19	3256-22	2	Washer-Flat
20	32104-95	2	Screw-HWH
21	3256-2	4	Washer-Flat
22	104-7201	4	Nut-HF, NI
23	121-3874	1	Wrench ASM
23:2	119-1846	1	Grip
24	136-2123-03	1	Plate-Decal
25	3269-22	4	Rivet-Pop
26	114-0846	1	Decal-Instructions, Operating
28	117-2718	1	Decal-Arrester, Spark
29	136-2165	2	Tread-Floor, Edge

Frame, Mount and Seal Assembly

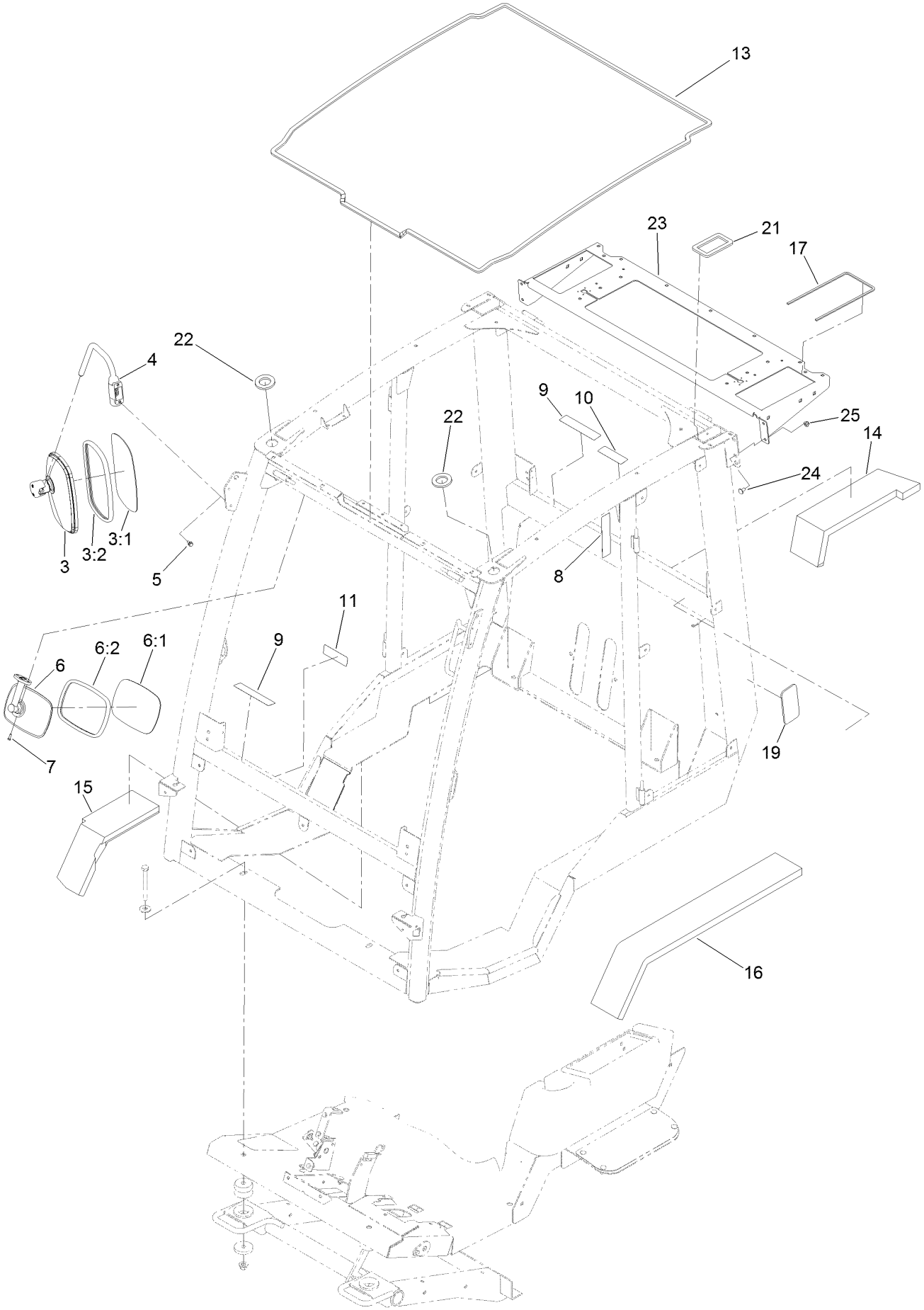

Frame, Mount and Seal Assembly (continued)

Ref.	Part Number	Qty.	Description
3	121-8341	2	Side Mirror ASM
3:1		1	Mirror-Glass ●
3:2		1	Gasket ●
4	121-8275	2	Arm-Mirror, Side
5	33103-016	4	Screw-HHF
6	121-8343	1	Interior Mirror ASM
6:1		1	Mirror ●
6:2		1	Gasket ●
7	32144-32	2	Screw-PPH
8	130-0594	1	Decal-Warning
9	130-0611	4	Decal-Window, Pin
10	130-5355	1	Decal-Window, Hood

Ref.	Part Number	Qty.	Description
11	130-5356	1	Decal-Traction Pedal
13	130-0586	1	Seal-Foam, Frame Roof
14	121-8545	1	Seal-Foam, RH-Upper
15	121-8546	1	Seal-Foam, RH
16	136-2182	1	Foam-Seal, LH
17	130-0587	2	Seal-Foam, Roof Air Filter
19	130-5923	2	Pad
21	130-5855	2	Seal-Tube, Rear
22	133-0982	2	Tube-Seal, Front
23	136-1768-03	1	Shelf-Mount, Fan
24	3230-18	4	Screw-CARR
25	104-8300	4	Nut-HF, NI

● Not serviced separately

Cab Headliner Assembly

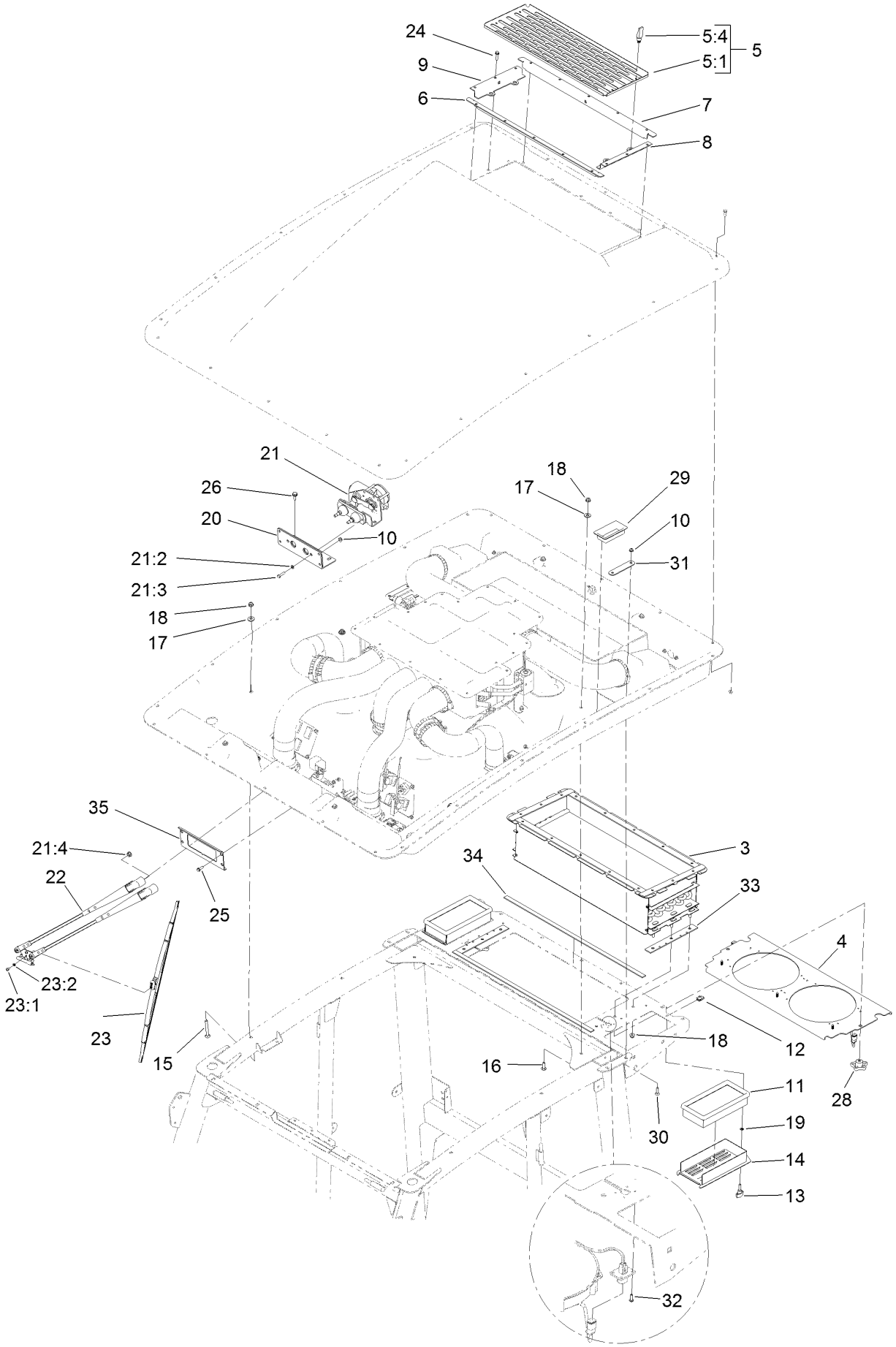

Cab Headliner Assembly (continued)

Ref.	Part Number	Qty.	Description
3	132-3468	1	A/C Duct ASM
4	132-3488	1	Panel-Fan
5		1	Screen ASM ●
5:1	132-3530-03	1	Screen
5:4	74-5950	4	Latch-Swell
6	132-3531-03	1	Seal-Front
7	132-3532-03	1	Seal-Rear
8	132-3533-03	1	Seal-Side, Left
9	132-3534-03	1	Seal-Side, Right
10	104-7201	8	Nut-HF, NI
11	121-8457	2	Filter-Air
12	107069	2	Clip
13	126-5846	2	Knob-T
14	125-9825-03	2	Cover-Air, Fresh
15	3230-9	4	Screw-CARR
16	3230-22	13	Screw-CARR
17	3256-3	17	Washer-Flat
18	104-8300	21	Nut-HF, NI
19	106-8737	2	Nut-Retainer
20	130-5871	1	Bracket-Wiper

Ref.	Part Number	Qty.	Description
21	125-7452	1	Wiper Motor ASM
21:2	3253-3	1	Washer-Lock
21:3	33113-025	1	Screw-HH
21:4	112-2844	2	Nut-HF
22	125-7453	1	Arm-Wiper
23	125-7454	1	Blade-Wiper
23:1	47-2830	2	Screw
23:2	43-5920	2	Washer-Lock, Spring
24	120-4654	16	Screw-HHF
25	32105-15	4	Screw-HWH
26	32144-11	2	Screw-HWH
28	117-5976	2	Knob-Handle
29	130-5661	2	Tube-Sleeve
30	3229-30	4	Screw-CARR
31	130-5854	2	Brace-Seal
32	363-8245	8	Screw-TAP
33	132-3608	2	Seal-Edge
34	132-3609	2	Seal-Strip
35	130-6068-03	1	Plate-Washer, Wiper Motor

● Not serviced separately

Air Conditioning Duct Assembly No. 132-3468

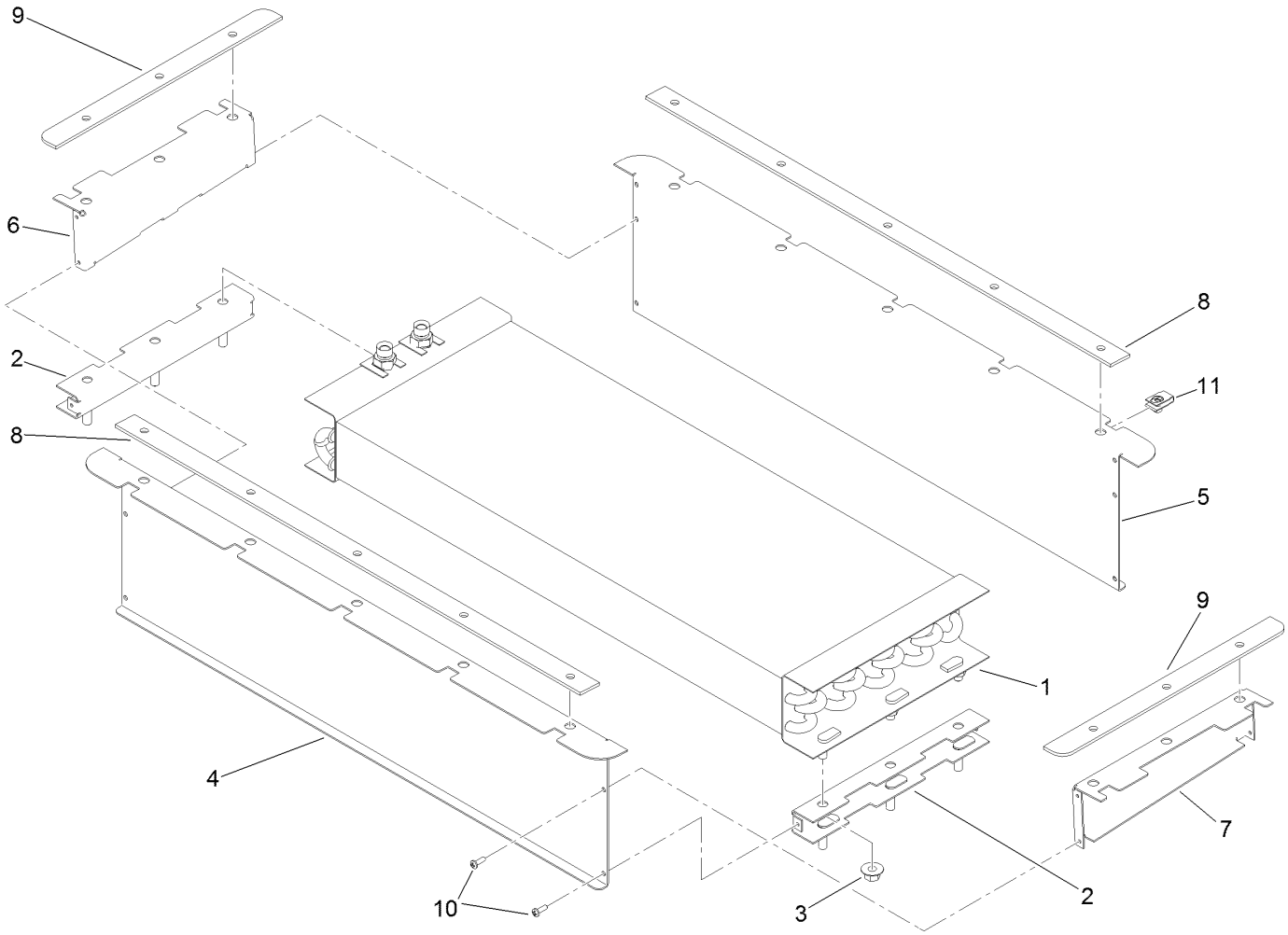

Air Conditioning Duct Assembly No. 132-3468 (continued)

Ref.	Part Number	Qty.	Description
1	121-8447	1	Core-Condenser
2	132-3469-03	2	Leg-Lower
3	32128-44	6	Nut
4	132-3462-03	1	Wall-Front
5	132-3463-03	1	Wall-Back
6	132-3464-03	1	Wall-Side, Right
7	132-3465-03	1	Wall-Side, Left
8	132-3466	2	Seal-Strip
9	132-3467	2	Seal-Edge
10	363-8245	12	Screw-TAP
11	107069	16	Clip

Fan Panel Assembly No. 132-3488

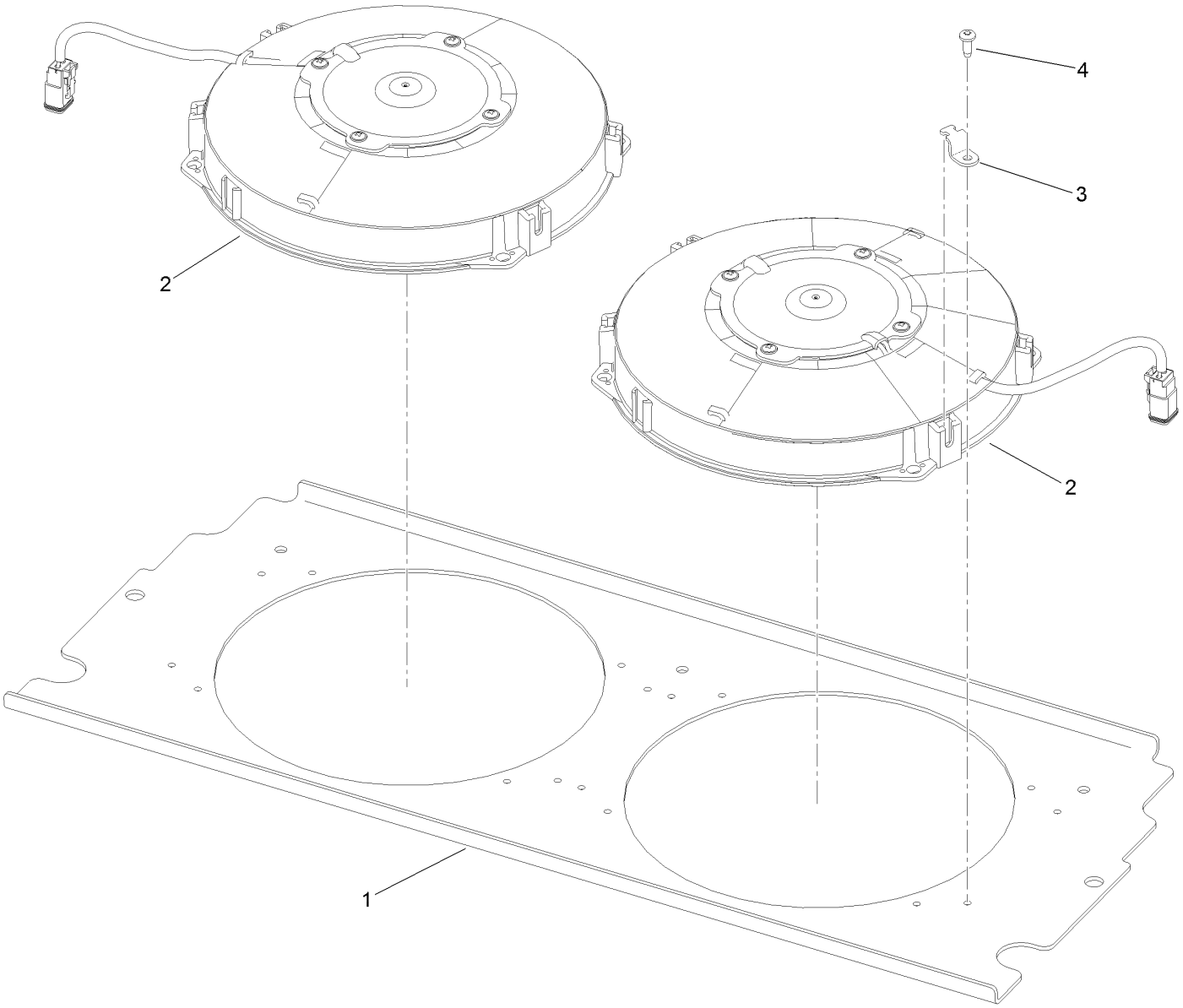

Fan Panel Assembly No. 132-3488 (continued)

Ref.	Part Number	Qty.	Description
1	132-3486-03	1	Plate-Mount, Fan
2	132-3607	2	Fan-Condenser
3	132-3606	8	Tab-Fan
4	105-6849	8	Screw-Forming, Thread

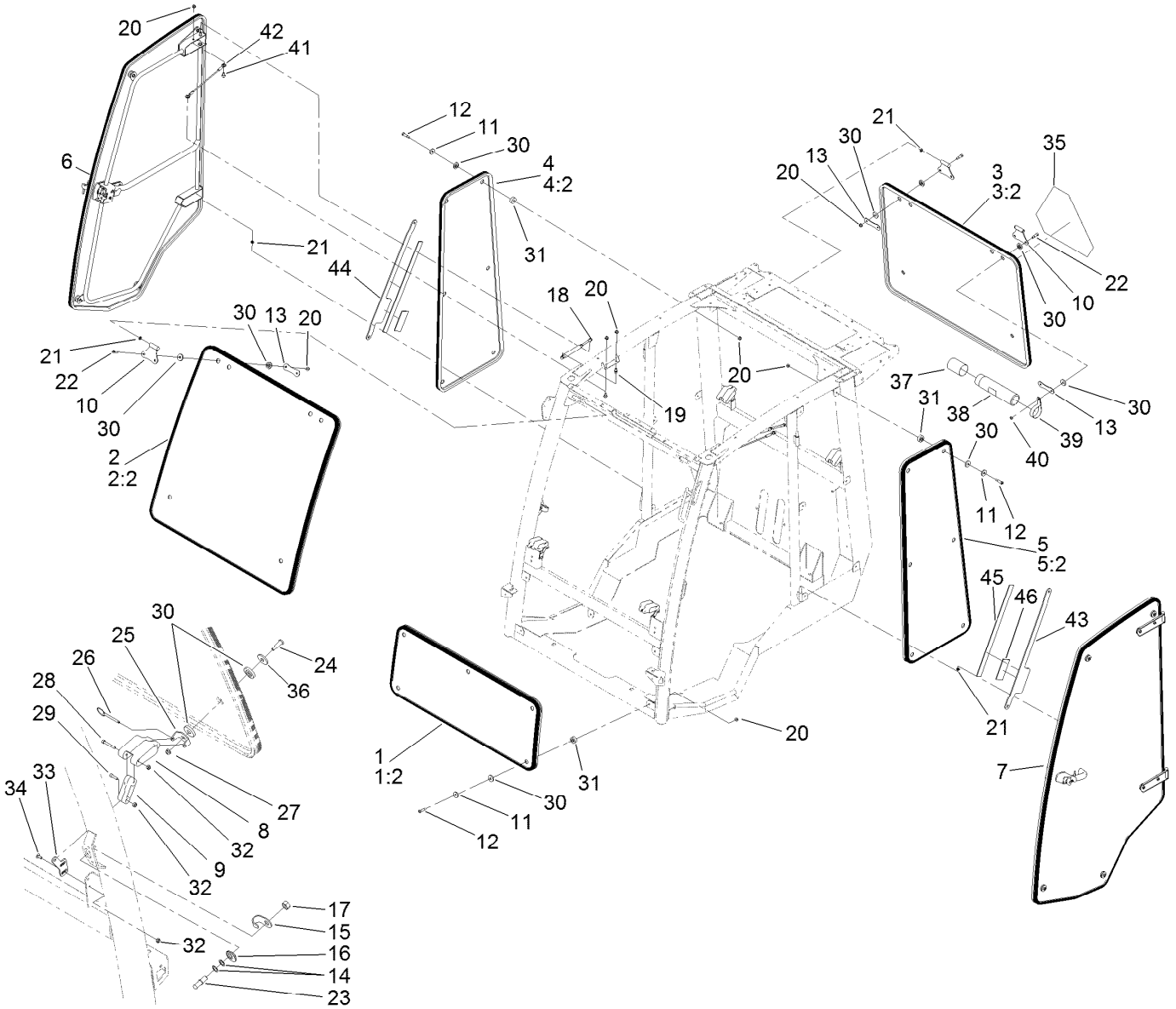

Window, Door and Striker Assembly

Ref.	Part Number	Qty.	Description
1	130-5681	1	Lower Front Window ASM
1:2	121-8211	1	Trim-Window, Front
2	130-5680	1	Upper Front Window ASM
2:2	121-8212	1	Seal-Trim
3	130-5682	1	Rear Window ASM
3:2	130-0637	1	Seal-Trim
4	130-5676	1	RH-Side Window ASM
4:2	121-8215	1	Seal-Trim
5	130-5677	1	LH-Side Window ASM
5:2	121-8215	1	Seal-Trim
6		1	RH Door ASM ■
7		1	LH Door ASM ■
8	125-9792	4	Handle-Window
9	125-9793	4	Link-Window
10	121-8535-03	4	Hinge-Window
11	130-5815	13	Washer-Backup
12	125-9521	17	Screw-Shldr HSH
13	127-9933	4	Plate-Backer, Windshield

Ref.	Part Number	Qty.	Description
14	73-0040	2	Washer-Thrust
15	121-8393	2	Guard-Striker
16	125-9992	2	Adjuster-Stud
17	106-0327	2	Nut-Hex
18	130-6083	2	Spring-Gas, Door
19	98-3104	2	Stud-Ball
20	104-8300	29	Nut-HF, NI
21	121-8441	8	Washer-Spacer
22	125-9520	8	Screw-Shoulder, HSH
23	125-9993	2	Striker-Stud
24	119-9812	4	Bolt-Shoulder
25	125-9987	4	Mount-Latch
26	127-9850	4	Pin-Release, Quick
27	104-7201	4	Nut-HF, NI
28	3274-59	4	Screw-HSH
29	3274-14	4	Screw-HSH
30	125-9982	41	Bushing-Flange
31	125-9537	17	Bushing-Flange

● Not illustrated

■ Not serviced separately

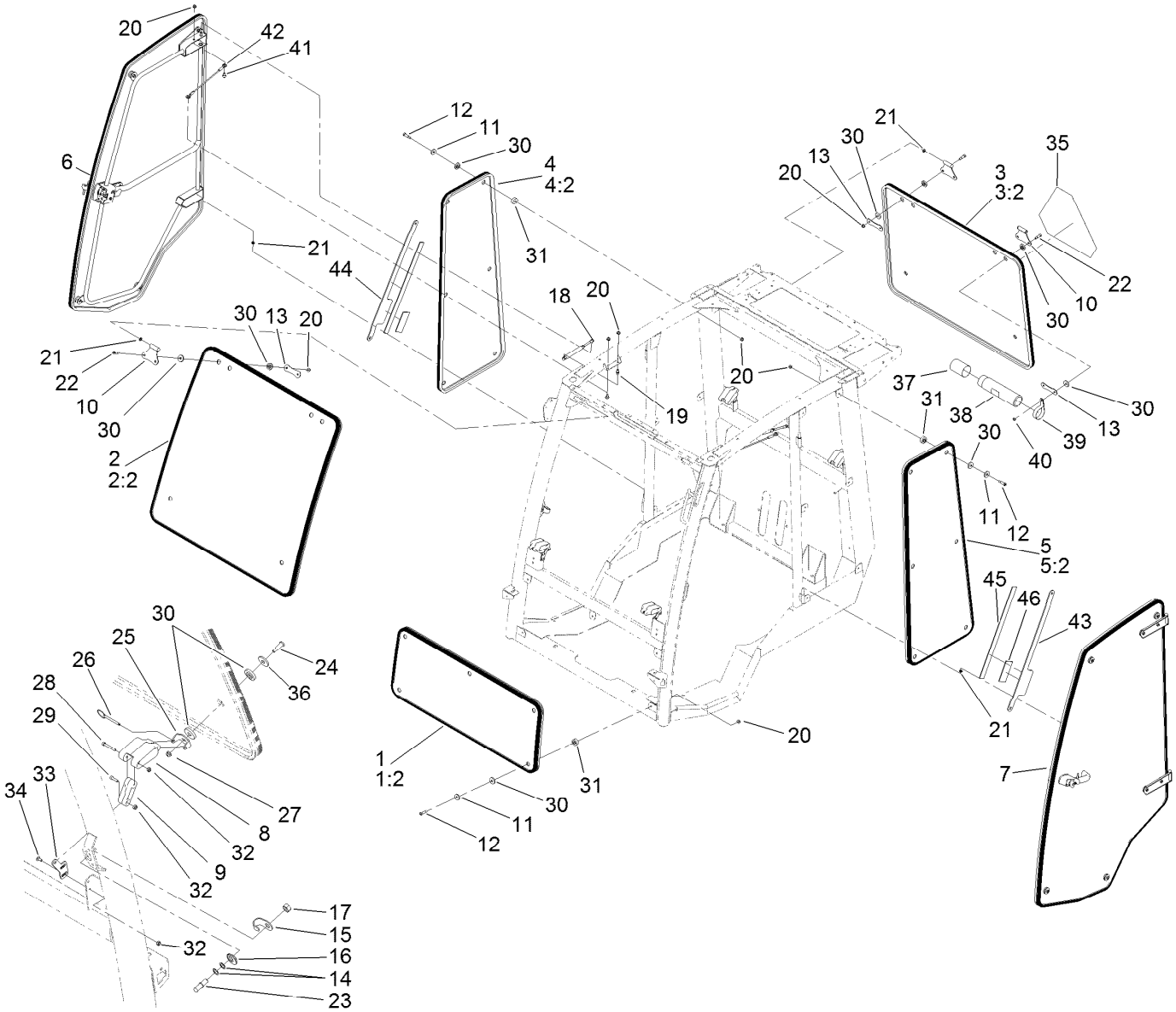

Window, Door and Striker Assembly (continued)

Ref.	Part Number	Qty.	Description
32	120-9681	16	Nut-Lock, NI
33	130-0590	4	Mount-Tab
34	1-807513	8	Bolt-CARR
35	120-0250	1	Decal-Warning
36	125-9676	4	Washer-Backup
37	104-7048	1	Cap-Housing
38	104-7050	1	Tube-Manual
39	2412-133	2	Clamp-R
40	3296-47	2	Nut-Lock,NI

Ref.	Part Number	Qty.	Description
41	120-9471	4	Bolt-Shoulder
42	130-5726	2	Lanyard
43	130-6095-03	1	Strap-Support, Left
44	130-6091-03	1	Strap-Support
45	130-6096	2	Strap-Foam, 19.5 Inch
46	130-6097	2	Strap-Foam, 4.25 Inch
48	133-1110	1	Pin-Hinge ●
49	121-8439	1	Receiver-Pivot, Hinge ●
50	121-4880	1	Bracket-Mount, Cable ●

● Not illustrated

■ Not serviced separately

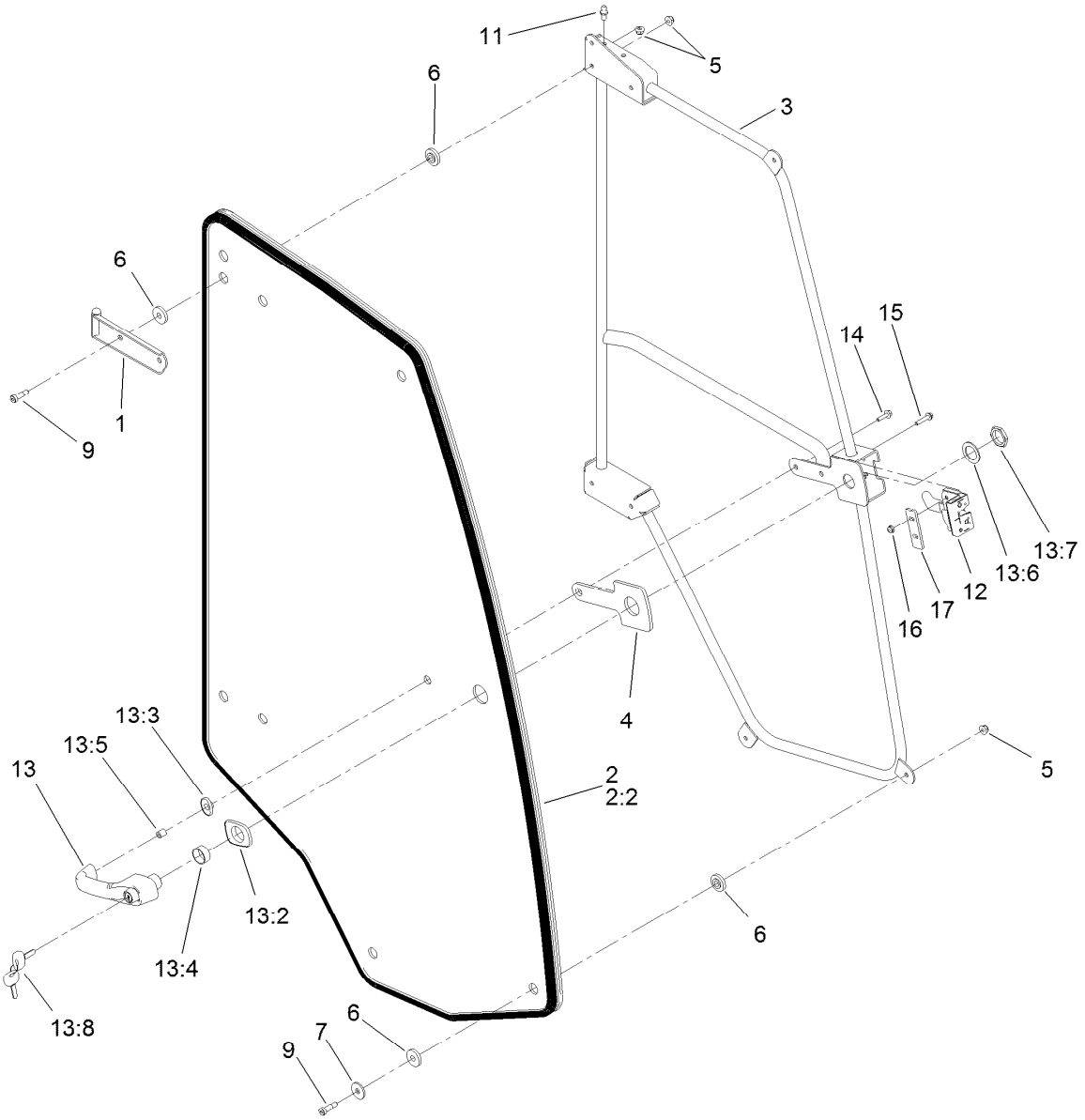

RH Door Assembly

Ref.	Part Number	Qty.	Description
1	125-9618-03	2	Hinge-Door, RH
2	130-5678	1	RH Door ASM
2:2	125-9799	1	Trim-Door
3	121-8570-03	1	Frame-Door, RH
4	121-8331	1	Gasket-Handle
5	104-8300	9	Nut-HF, NI
6	125-9982	16	Bushing-Flange
7	125-9676	4	Washer-Backup
9	125-9520	8	Screw-Shoulder, HSH
11	98-3104	1	Stud-Ball
12	121-8390	1	Latch-RH
13	121-8630	1	Handle ASM

Ref.	Part Number	Qty.	Description
13:2	121-8628	1	Cylinder-Mounting, Key
13:3	121-8322	1	Grommet-Mounting, Large
13:4	121-8327	1	Washer
13:5	121-8328	1	Nut
13:6	121-8627	1	Cylinder-Mounting, End
13:7	121-8323	1	Grommet-Mounting, Small
13:8	125-9531	1	Key-Set
14	33103-025	1	Screw-HHF
15	3234-21	2	Screw-HHF
16	104-7201	2	Nut-HF, NI
17	121-8395	1	Plate-Support, Latch

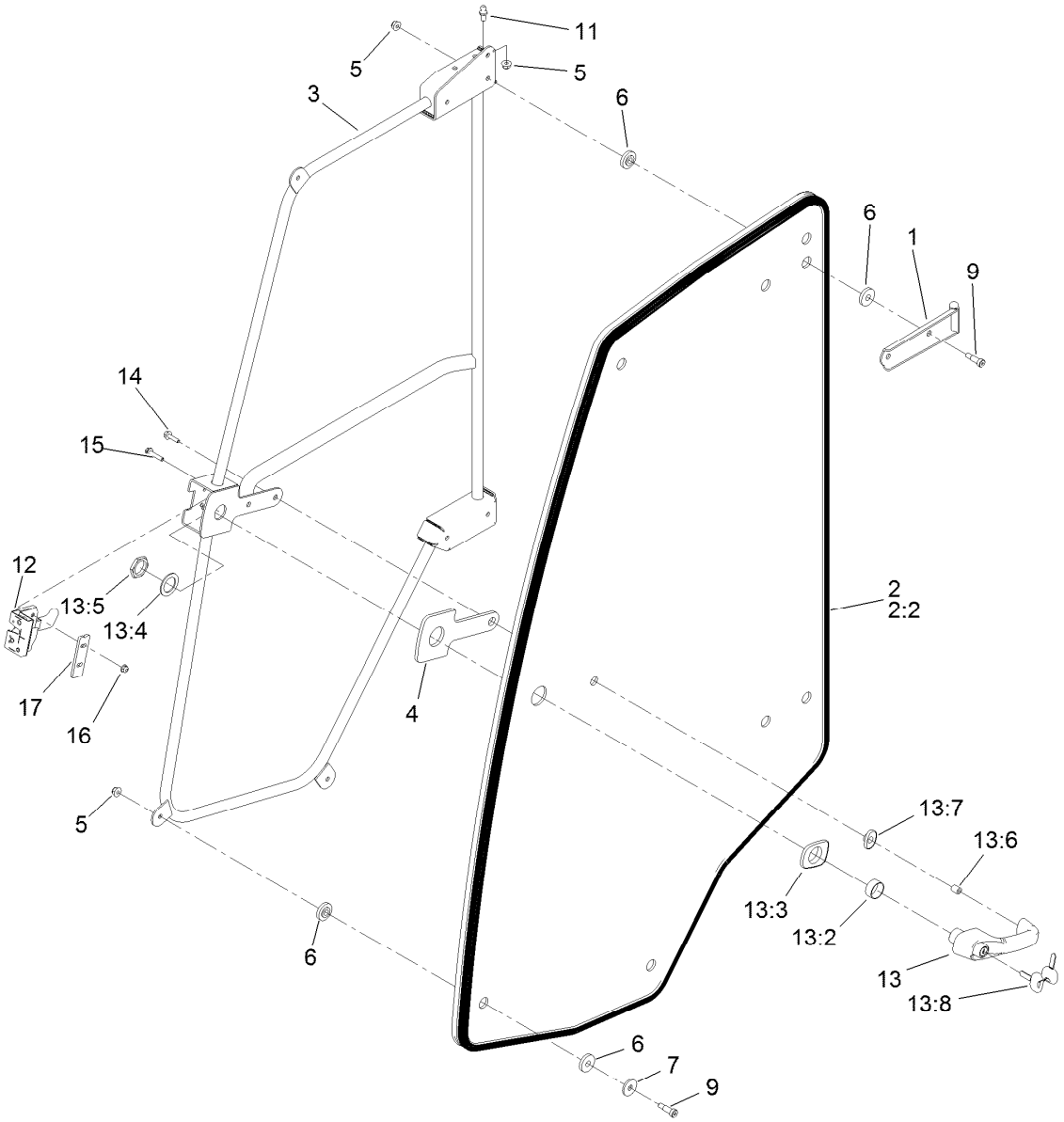

LH Door Assembly

Ref.	Part Number	Qty.	Description
1	125-9619-03	2	Hinge-Door, LH
2	130-5679	1	LH Door ASM
2:2	121-8216	1	Trim-Window
3	121-8571-03	1	Frame-Door, LH
4	121-8331	1	Gasket-Handle
5	104-8300	9	Nut-HF, NI
6	125-9982	16	Bushing-Flange
7	125-9676	4	Washer-Backup
9	125-9520	8	Screw-Shoulder, HSH
11	98-3104	1	Stud-Ball
12	121-8391	1	Latch-LH
13	121-8630	1	Handle ASM

Ref.	Part Number	Qty.	Description
13:2	121-8628	1	Cylinder-Mounting, Key
13:3	121-8322	1	Grommet-Mounting, Large
13:4	121-8327	1	Washer
13:5	121-8328	1	Nut
13:6	121-8627	1	Cylinder-Mounting, End
13:7	121-8323	1	Grommet-Mounting, Small
13:8	125-9531	1	Key-Set
14	33103-025	1	Screw-HHF
15	3234-21	2	Screw-HHF
16	104-7201	2	Nut-HF, NI
17	121-8395	1	Plate-Support, Latch

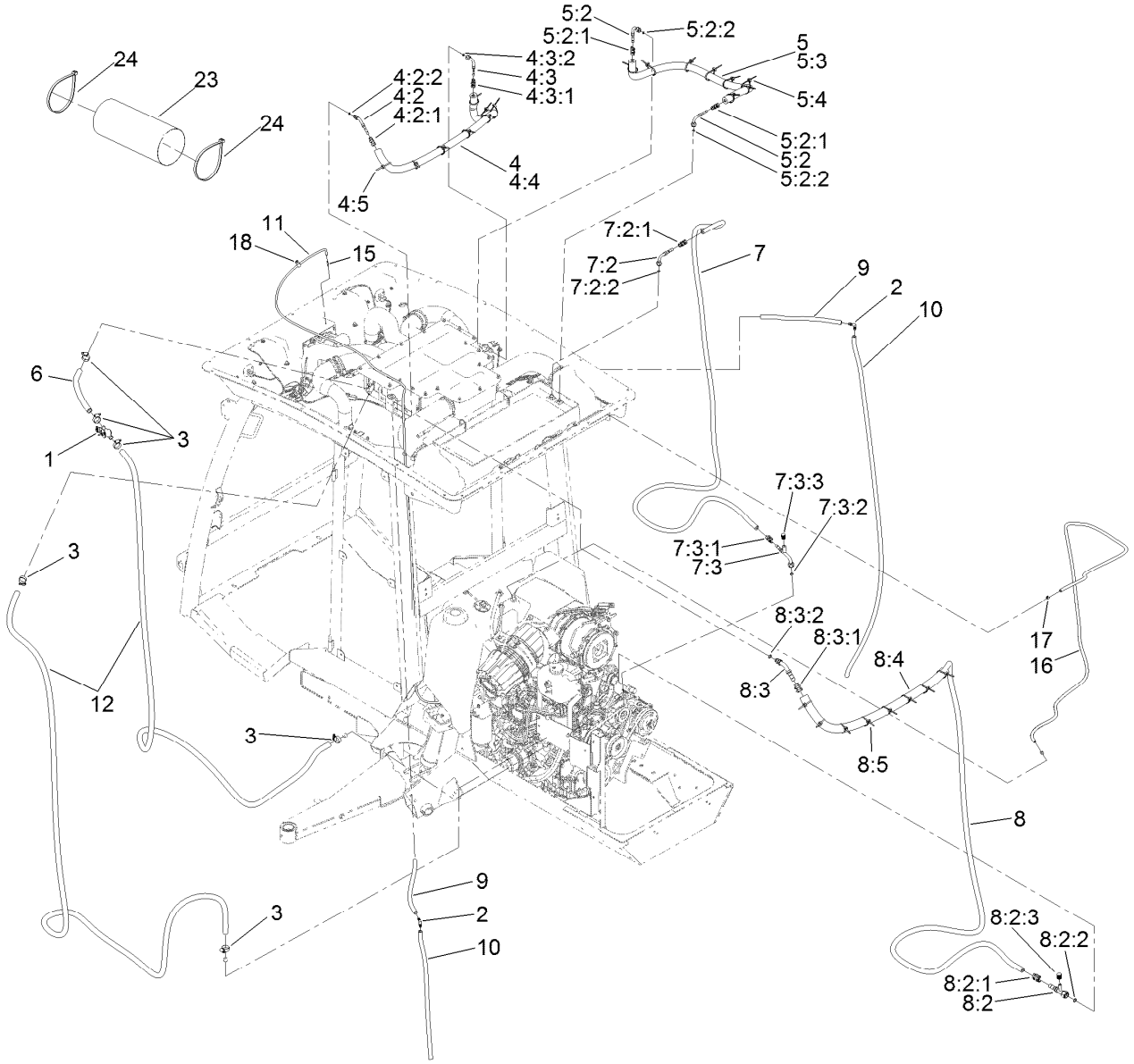

Engine Hose Routing Assembly

Ref.	Part Number	Qty.	Description
1	120-4947	1	Valve-Heater
2	130-0578	2	Fitting-Barb, 90 DEG
3	2412-129	6	Clamp-Hose
4	125-9702	1	Hose ASM
4:2	130-5753	1	Fitting-45 DEG
4:2:1	130-5772	1	Fitting Kit
4:2:2	117-2778	1	O-Ring
4:3	130-5751	1	Fitting-Female, 90 DEG
4:3:1	130-5772	1	Fitting Kit
4:3:2	117-2778	1	O-Ring
4:4	130-5958	1	Cover-Foam
4:5	3290-378	8	Tie-Cable
5	125-9703	1	Hose ASM
5:2	130-5751	2	Fitting-Female, 90 DEG
5:2:1	130-5772	1	Fitting Kit
5:2:2	117-2778	1	O-Ring
5:3	130-5958	1	Cover-Foam
5:4	3290-378	8	Tie-Cable
6	125-9706	1	Hose-Heater
7	125-9861	1	Hose ASM
7:2	130-5752	1	Fitting-Female, 90 DEG

Ref.	Part Number	Qty.	Description
7:2:1	130-5773	1	Fitting Kit
7:2:2	117-2778	1	O-Ring
7:3	130-5758	1	Fitting-Female, 90 DEG
7:3:1	130-5773	1	Fitting Kit
7:3:2	117-2779	1	O-Ring
7:3:3	117-2783	1	Cap-Side, High
8	125-9862	1	Hose ASM
8:2	130-5755	1	Fitting-Female, Straight
8:2:1	130-5775	1	Fitting Kit
8:2:2	117-2780	1	O-Ring
8:2:3	117-2784	1	Cap-Side, Low
8:3	130-5754	1	Fitting-Male, 45 DEG
8:3:1	130-5775	1	Fitting Kit
8:3:2	117-2780	1	O-Ring
8:4	130-5959	1	Cover-Foam
8:5	3290-378	16	Tie-Cable
9	125-9865	2	Hose-Drain
10	125-9866	2	Hose-Drain
11	127-9901	1	Hose-Washer Fluid
12	125-9864	2	Hose-Heater
15	127-9905	1	Fitting-Hose, Barb

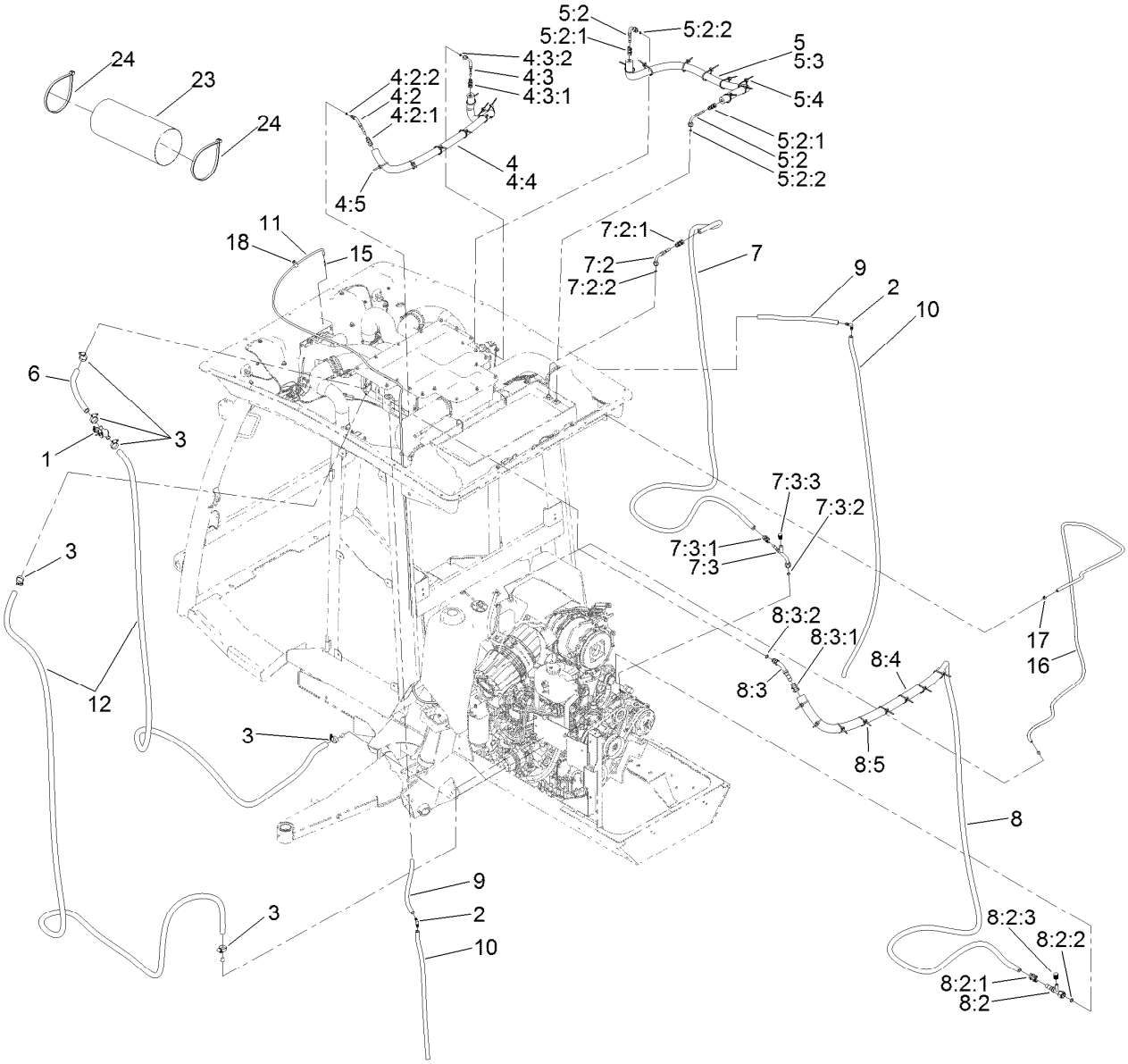

Engine Hose Routing Assembly (continued)

Ref.	Part Number	Qty.	Description
16	130-5813	1	Hose-Fuel
17	2412-98	1	Clamp-Hose
18	2412-73	1	Clamp-R

Ref.	Part Number	Qty.	Description
23	133-1025	1	Wrap-Abrasion
24	94-3890	2	Tie-Cable

Pre-Filter Screen Assembly

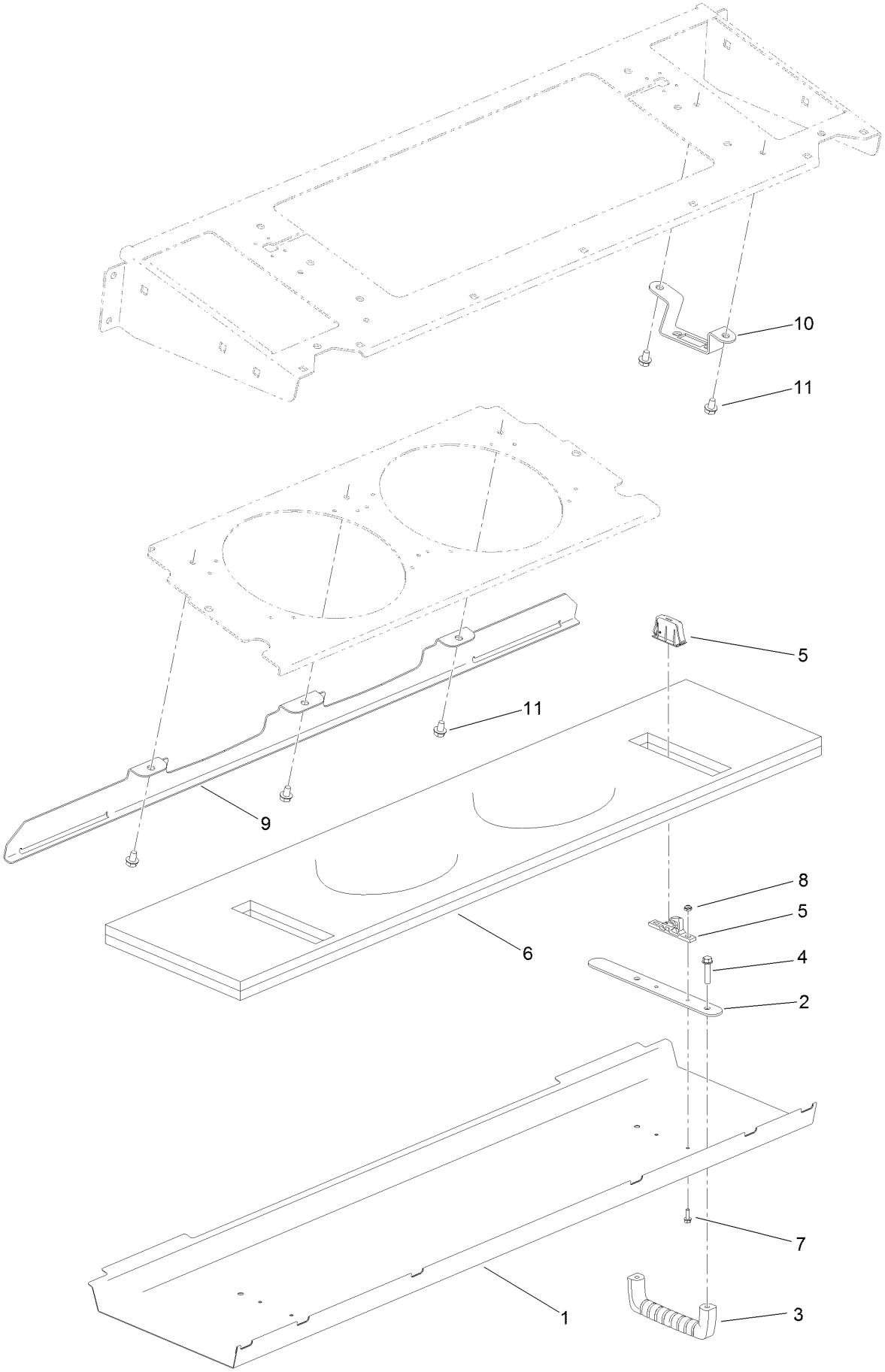

Pre-Filter Screen Assembly (continued)

Ref.	Part Number	Qty.	Description
1	130-0640-03	1	Screen
2	130-0642-03	2	Backplate
3	65-5100	2	Handle-Door
4	46-8092	4	Screw-Plastite
5	130-0643	2	Latch-Push To Close
6	130-5875	1	Pre-Filter
7	112-3169	4	Screw-HHF, Serrated
8	3296-54	4	Nut-Lock
9	132-3630-03	1	Screen-Mount, Front
10	136-2171	2	Mount-Latch
11	32104-82	7	Screw-HHF

Interior Foam Assembly

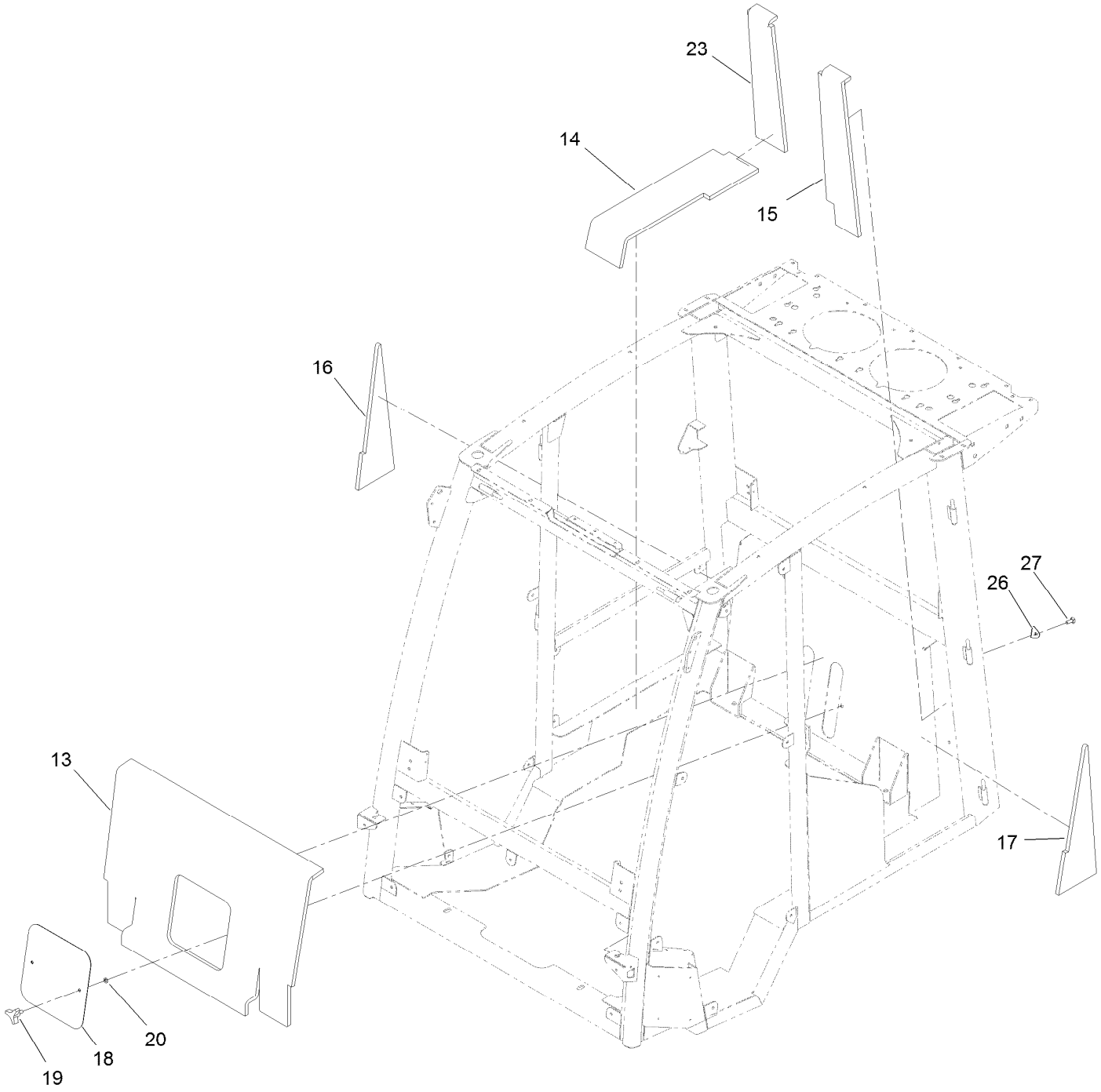

Interior Foam Assembly (continued)

Ref.	Part Number	Qty.	Description
13	130-0564	1	Foam-Upholstery, Rear
14	136-2179	1	Foam-Interior, RH (Lower)
15	136-2178	1	Foam-Upholstery, Rear (LH)
16	130-0561	1	Foam-Upholstery, Side (RH)
17	130-0570	1	Foam-Upholstery, Rear (LH)
18	121-8161-03	1	Plate-Panel, Acess

Ref.	Part Number	Qty.	Description
19	117-5976	2	Knob-Handle
20	3296-47	2	Nut-Lock,NI
23	130-5838	1	Foam-Interior, RH (Upper)
26	132-3495	2	Retainer-Cover
27	3230-22	2	Screw-CARR

Roof and Headliner Assembly

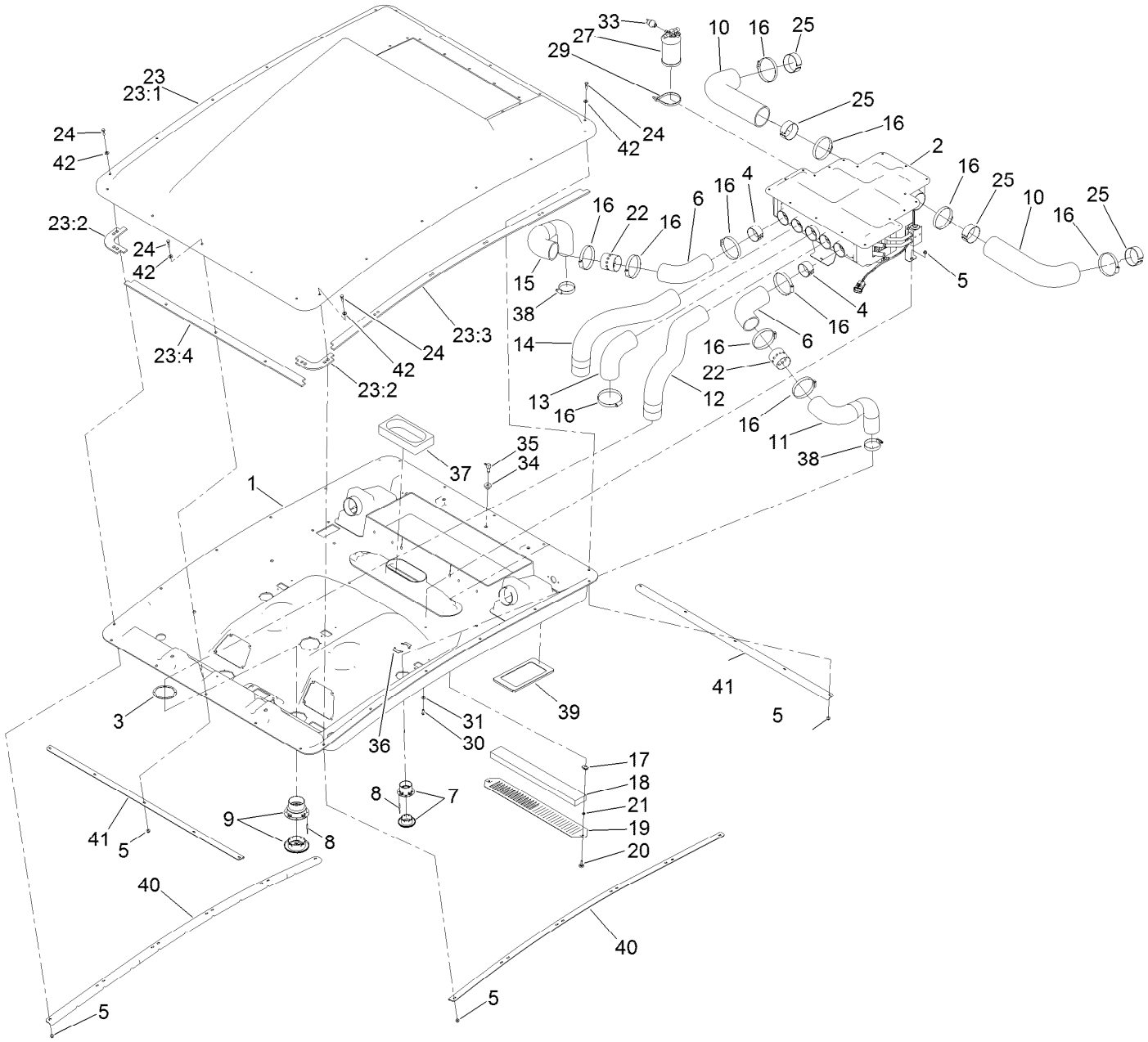

Roof and Headliner Assembly (continued)

Ref.	Part Number	Qty.	Description
1	121-8470	1	Headliner
2	121-8495	1	Box-Mixing, Heater A/C
3	130-0558	3	Backplate-Rivet
4	130-5938	2	Tube-Support
5	104-7201	24	Nut-HF, NI
6	130-5860	2	Hose-Vent
7	130-0455	2	Louver-Round, Snap-In
8	125-7503	20	Rivet-Pop
9	130-0465	3	Louver-Round, Snap-In (4 Inch)
10	121-8473	2	Hose-Intake, Fresh Air
11	130-5861	1	Hose-Vent, Outer (LH)
12	121-8477	1	Hose-Vent, Defrost (LH)
13	130-0437	1	Hose-Vent, Center
14	121-8478	1	Hose-Vent, Defrost (RH)
15	130-5862	1	Hose-Vent, Outer (RH)
16	2412-110	11	Clamp-Band/Screw
17	107069	2	Clip
18	125-9532	1	Filter-Cab, Inside
19	125-9604-03	1	Plate-Cover, Recirculation
20	125-7438	2	Knob-Screw, Thumb
21	106-8737	2	Nut-Retainer
22	130-5927	2	Adapter-Bleed
23		1	Roof ASM ●
23:1	132-3602	1	Roof
23:2	130-5961	4	Seal-Corner
23:3	130-5960	2	Seal-Side
23:4	130-5962	2	Seal-Front, Rear
24	136-8674	22	Bolt-Pivot, Eccentric
25	130-5939	4	Tube-Support
27	130-5999	1	Drier-Receiver
29	3334-945	2	Tie-Cable
30	3274-69	2	Screw-HSBH
31	3256-1	2	Washer-Flat
33	119-4501	1	Switch-Function, Dual
34	46-6560	1	Bushing
35	104-5228	1	Fitting-Elbow, 90 DEG
36	130-0445	4	Backplate-Rivet
37	130-0444	1	Foam-Inlet, Airbox
38	2412-130	2	Clamp-Hose
39	132-3474	2	Insert-Seal, Filter
40	132-1461-03	2	Strap-Cab, Side
41	132-1462-03	2	Strap-Cab
42	3256-74	22	Washer-Flat

● Not serviced separately

Headliner Wire Harness and Control Assembly

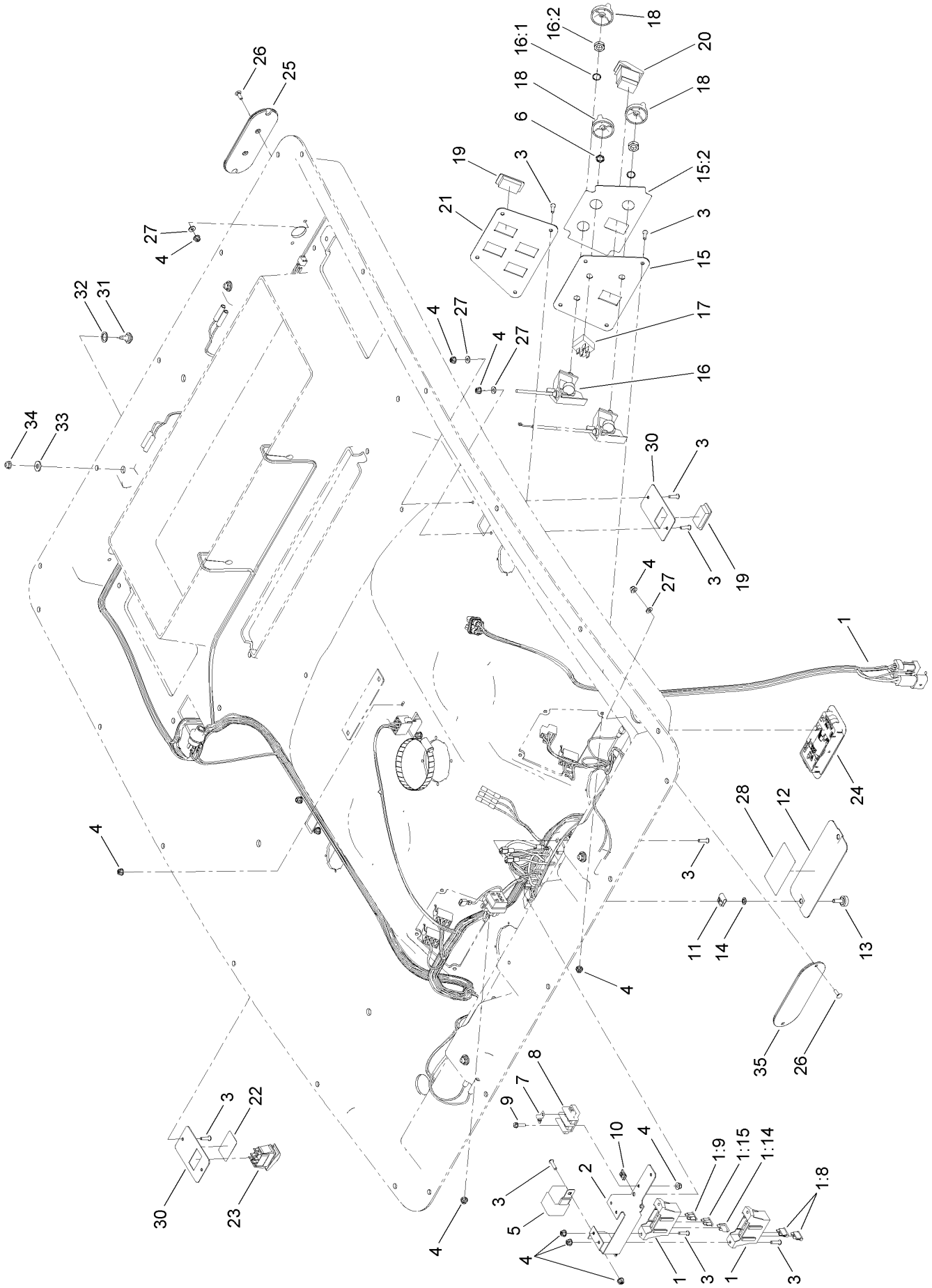

Headliner Wire Harness and Control Assembly (continued)

Ref.	Part Number	Qty.	Description
1	122-0723	1	Harness-Wire, Headliner
1:8	109355	2	Fuse-Blade, 15 Amp
1:9	109103	1	Fuse-Blade, 30 Amp
1:14	109101	1	Fuse-Blade, 20 Amp
1:15	109102	1	Fuse-Blade, 25 Amp
2	125-9606-03	1	Bracket-Fuse Block
3	104-2408	22	Screw-HSBH
4	120-4578	29	Nut-HF
5	99-7430	1	Relay-Mini
6	130-0588	1	Nut-Switch
7	42863	1	Strip-Jumper
8	42862	1	Block-Terminal, Ground
9	32105-13	3	Screw-HWH
10	107-1013	4	Nut-Speed
11	609900	2	Nut-Speed
12	125-9603-03	1	Plate-Cover, Fuse
13	125-7438	2	Knob-Screw, Thumb
14	106-8737	2	Nut-Retainer
15	121-8481	1	Panel-Air/Heat
15:2	121-8378	1	Decal, Air/Heat
16	125-9677	1	Control-Rotary, Linear
16:1	3254-20	1	Washer-Lock, Int
16:2	3220-4	1	Nut-Jam
17	122-0150	1	Switch, Rotary
18	125-9510	3	Knob-Control
19	99-7420	6	Plug-Hole
20	95-8999	1	Switch-Rocker, On-None-On
21	125-9691-03	1	Panel-Switch, Lights
22	125-9688	1	Decal-Washer
23	119-8355	1	Switch-Rocker
24	125-7437	1	Light-Dome
25	130-5867	2	Cover-Light, Rear
26	3229-34	8	Screw-CARR
27	3256-14	14	Washer-Flat
28	132-3600	1	Decal-Panel, Fuse
30	130-0436	3	Panel-Switch
31	92-9698	4	Screw-Shoulder
32	94-8196	4	Washer-Nylon
33	3256-2	4	Washer-Flat
34	104-7201	4	Nut-HF, NI
35	130-5868	2	Cover-Light, Front

Mixing Box Mounting Bracket and Water Tray Assembly

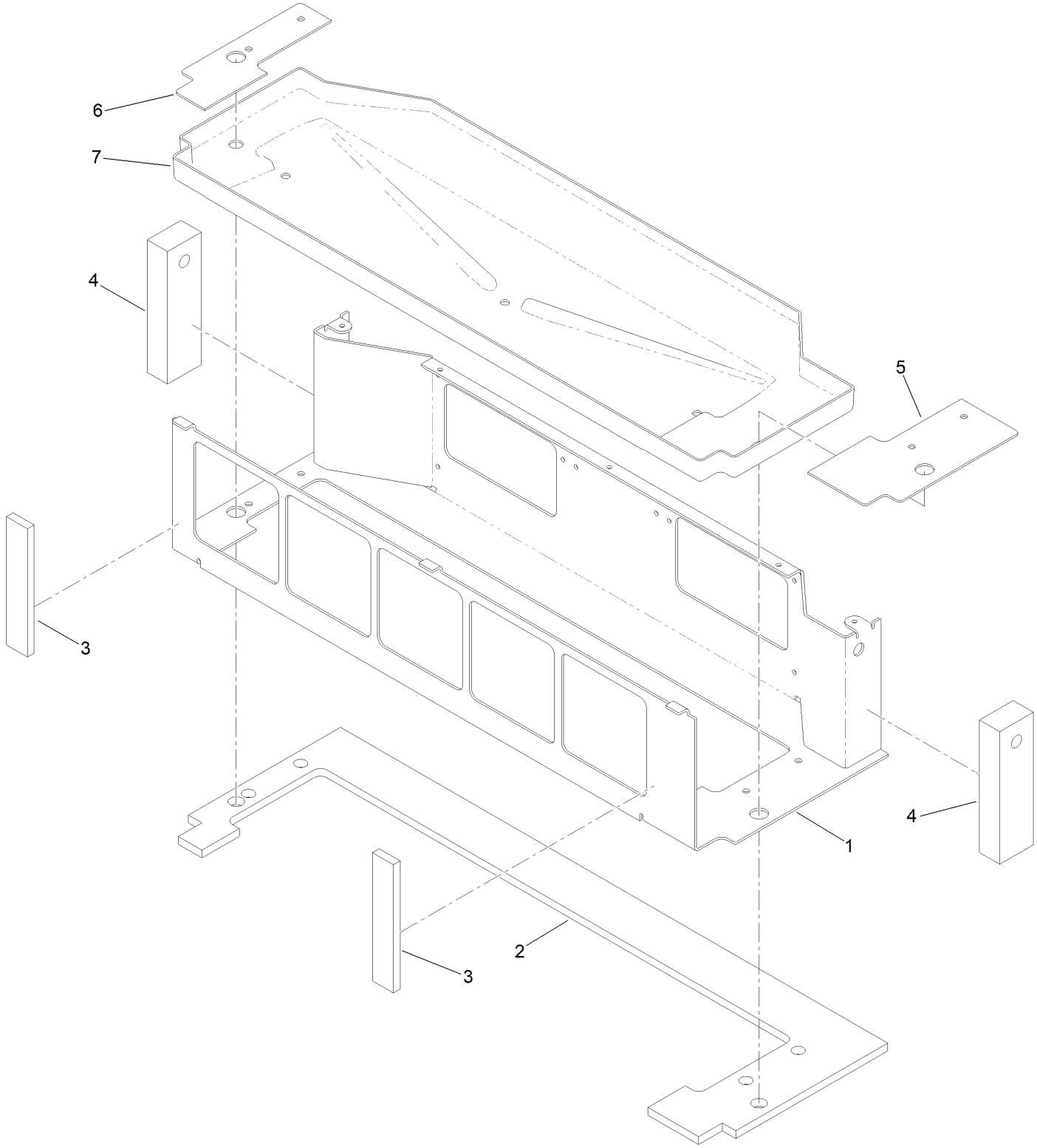

Mixing Box Mounting Bracket and Water Tray Assembly (continued)

Ref.	Part Number	Qty.	Description
1	130-5655-03	1	Bracket-Mount
2	130-5659	1	Seal-Foam
3	130-5808	2	Seal-Foam, Front
4	130-0602	2	Seal-End
5	130-5653	1	Gasket-Mount, LH Bracket
6	130-5654	1	Gasket-Mount, RH Bracket
7	130-5660	1	Tray-Water

Blower Fan and Evaporator Core Assembly

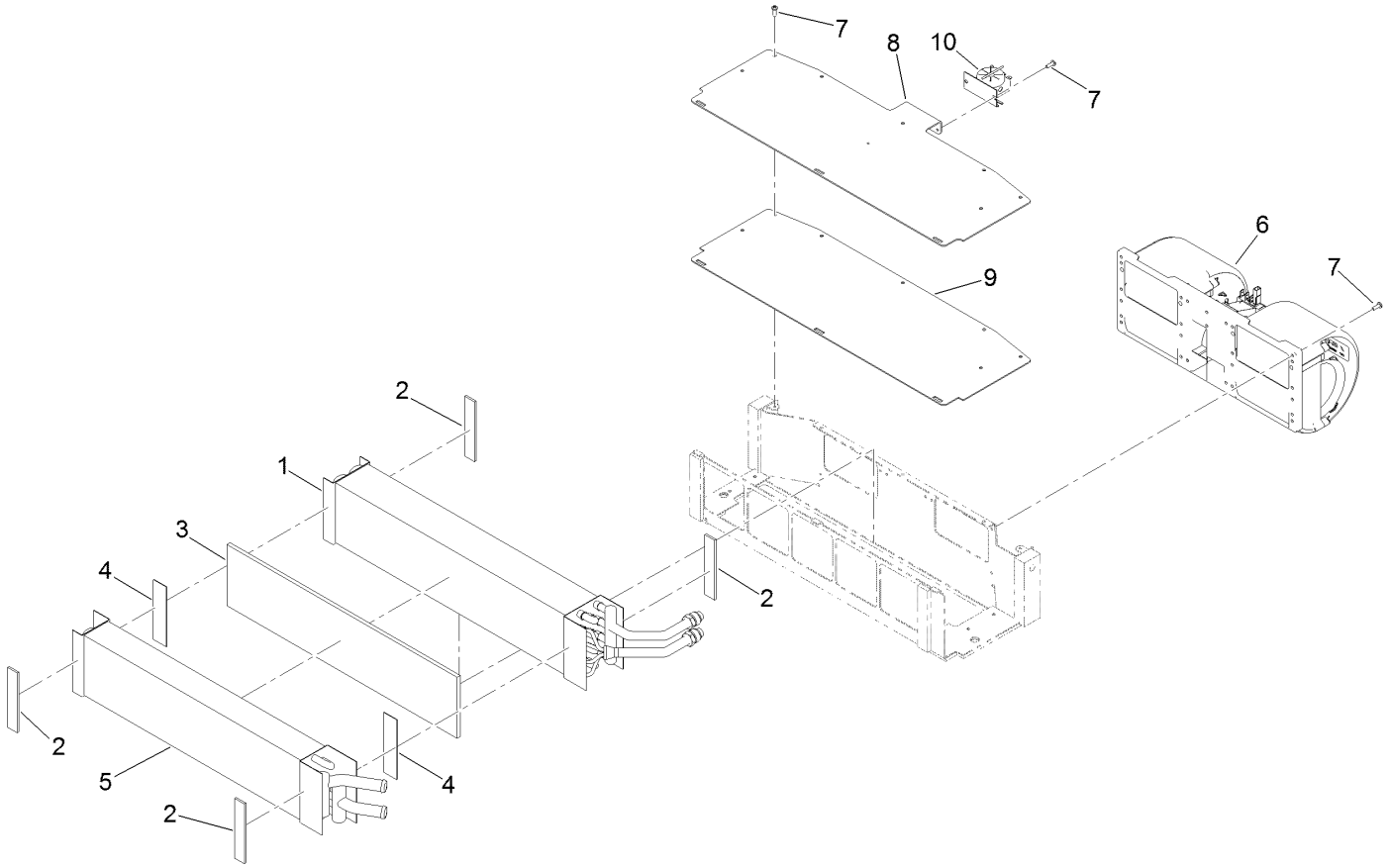

Blower Fan and Evaporator Core Assembly (continued)

Ref.	Part Number	Qty.	Description
1	130-5392	1	Core-Evaporator
2	130-5658	4	Gasket-Coil
3	130-5807	1	Foam
4	130-5806	2	Tape, Double-Sided
5	127-9915	1	Core-Heater
6	121-8451	1	Fan-Blower
7	363-8245	13	Screw-TAP
8	130-5656-03	1	Cover, Bracket-Mount
9	130-5652	1	Gasket-Mount, Cover Bracket
10	121-8385	1	Thermostat-Switch, Freeze

Heat/Air Conditioner Housing Assembly

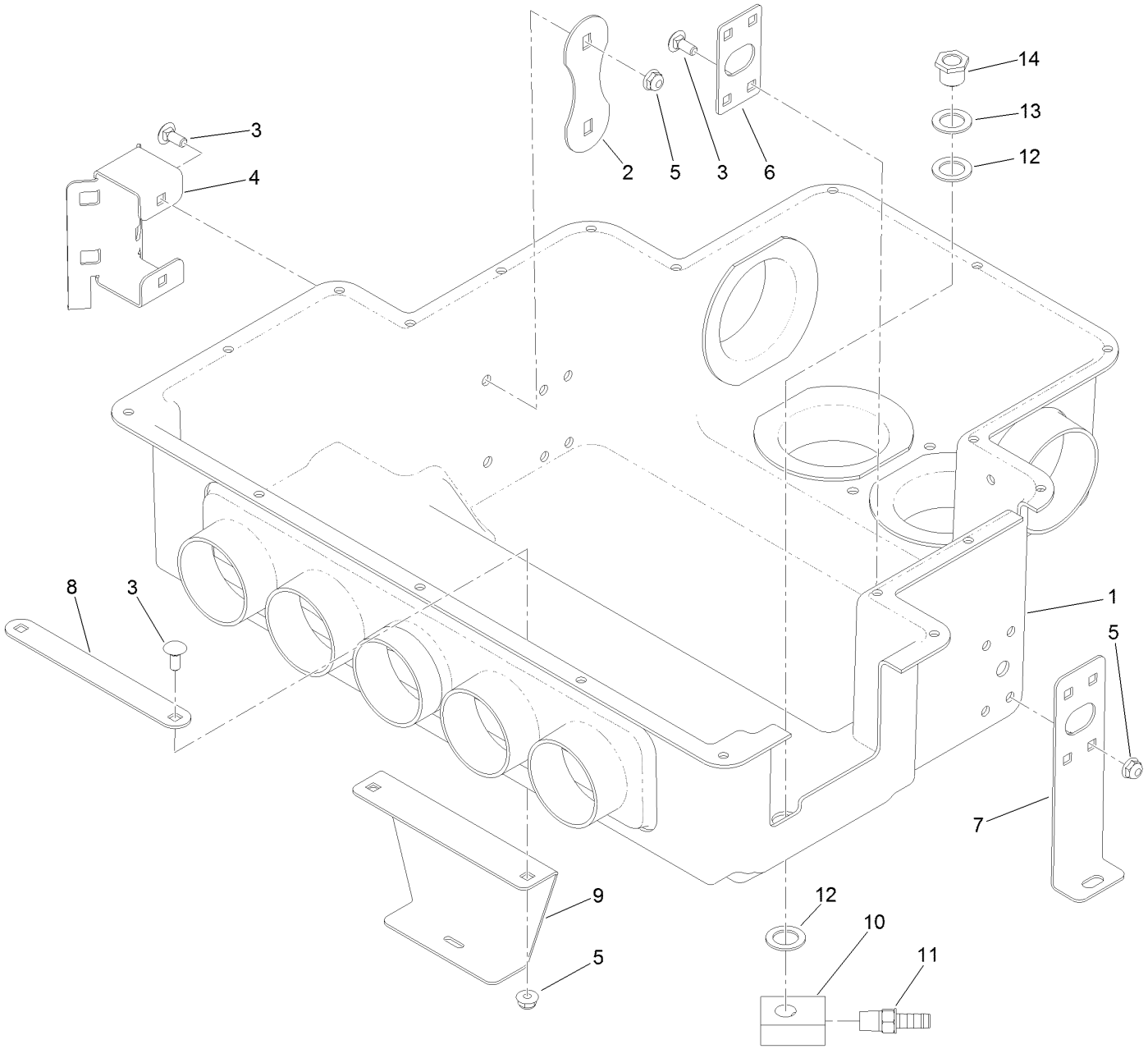

Heat/Air Conditioner Housing Assembly (continued)

Ref.	Part Number	Qty.	Description
1	130-5830	1	Housing-Heat/AC
2	121-8491	1	Plate-Support
3	3229-11	12	Screw-CARR
4	121-8490	1	Bracket-Mount, Drier
5	104-7201	12	Nut-HF, NI
6	130-5834	2	Bracket-Support
7	130-5821	2	Bracket-Airbox, Side
8	125-7504	1	Plate-Backer, Center
9	130-0554	1	Bracket-Airbox, Center
10	130-5601	2	Drain-Lower
11	108-0342	2	Fitting-Straight
12	121-6840	4	Washer-Rubber
13	107-3041	2	Washer-Flat
14	130-0293	2	Drain-Upper

Air Diverter and Expansion Valve Assembly

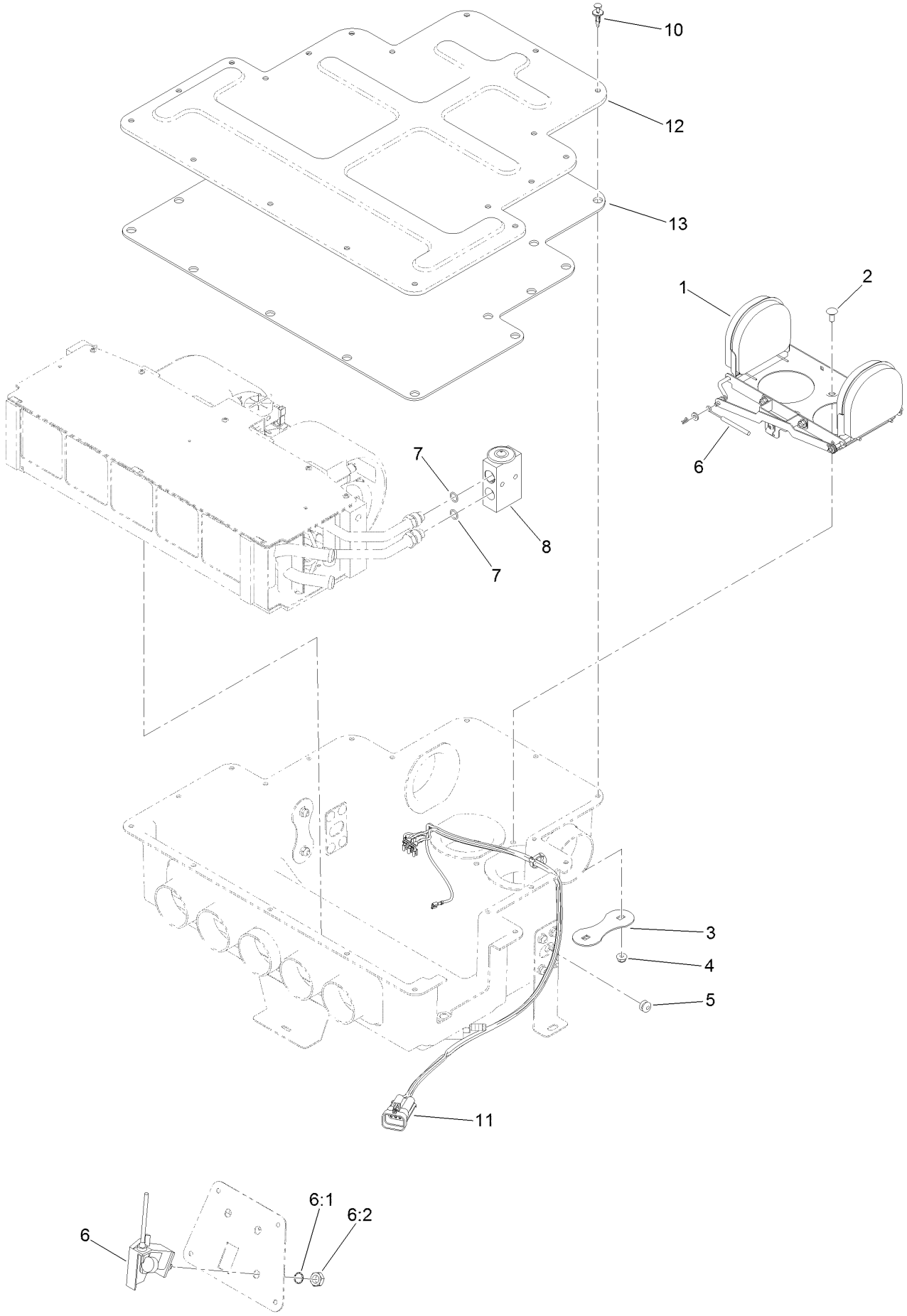

Air Diverter and Expansion Valve Assembly (continued)

Ref.	Part Number	Qty.	Description
1	121-8369	1	Air Diverter ASM
2	3229-11	2	Screw-CARR
3	121-8491	1	Plate-Support
4	104-7201	2	Nut-HF, NI
5	125-7528	1	Grommet-Cable
6	125-9678	1	Control-Rotary, Linear
6:1	3254-20	1	Washer-Lock, Int
6:2	3220-4	1	Nut-Jam

Ref.	Part Number	Qty.	Description
7	125-9524	2	O-Ring
8	121-8384	1	Valve-Expansion
10	125-9622	19	Rivet-Blind
11	122-0153	1	Harness-Wire, Heat/AC Blower
12	121-8449	1	Housing-Ventilation, Upper
13	130-5614	1	Insulation-Cover

Air Diverter Assembly No. 121-8369

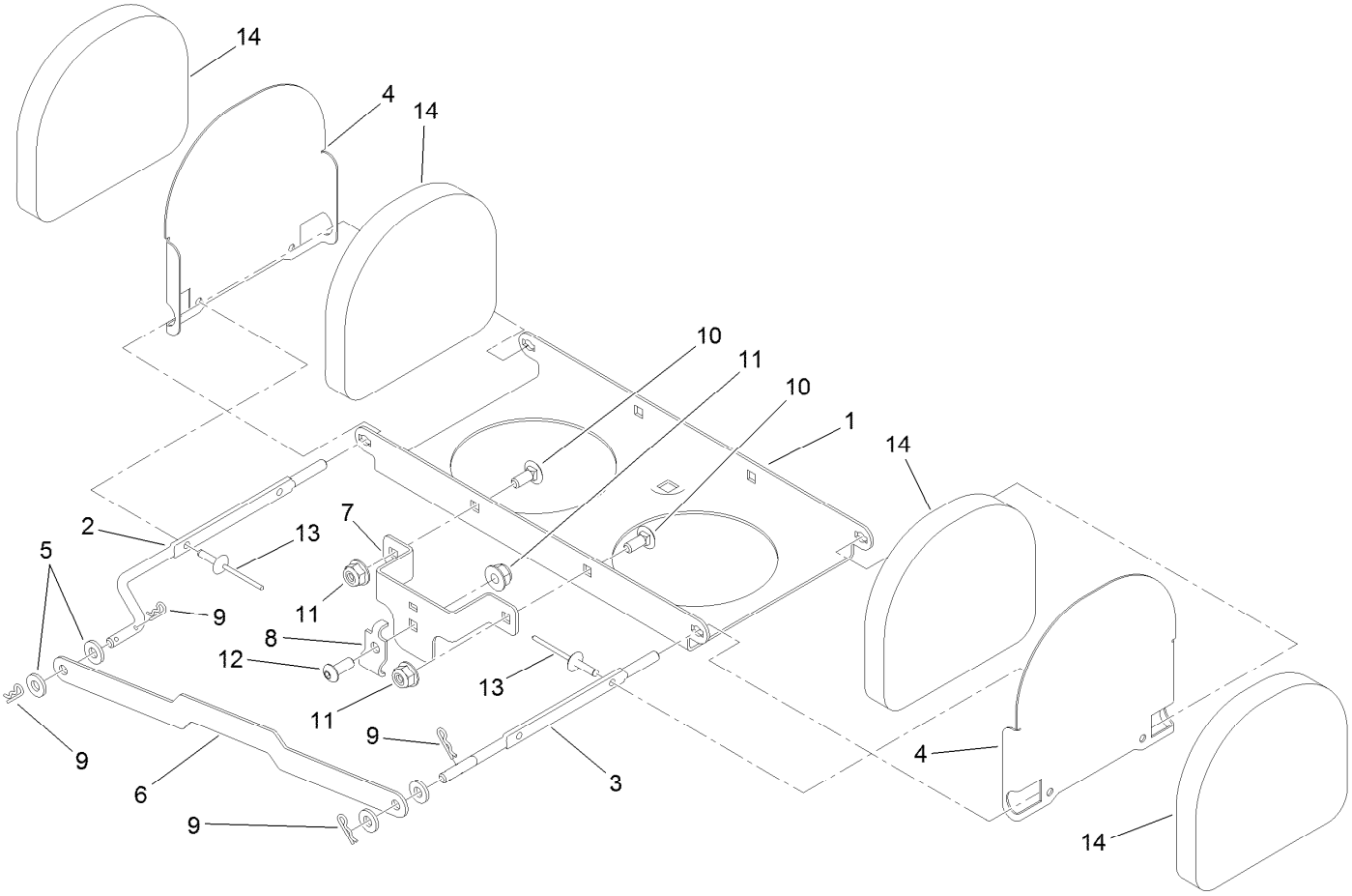

Air Diverter Assembly No. 121-8369 (continued)

Ref.	Part Number	Qty.	Description
1	125-9697	1	Base-Mount
2	121-8381	1	Shaft-Baffle, RH
3	121-8382	1	Shaft-Baffle, LH
4	125-9698	2	Baffle-Air
5	3256-51	4	Washer-Flat
6	125-9696	1	Link-Baffle
7	121-8374	1	Mount-Cable
8	121-8256	1	Clamp-Conduit
9	108-2992	4	Pin-Hair
10	1-807513	2	Bolt-CARR
11	120-4578	3	Nut-HF
12	115-9830	1	Screw-HSBH
13	3290-271	4	Rivet-Pop
14	125-9699	4	Damper-Foam

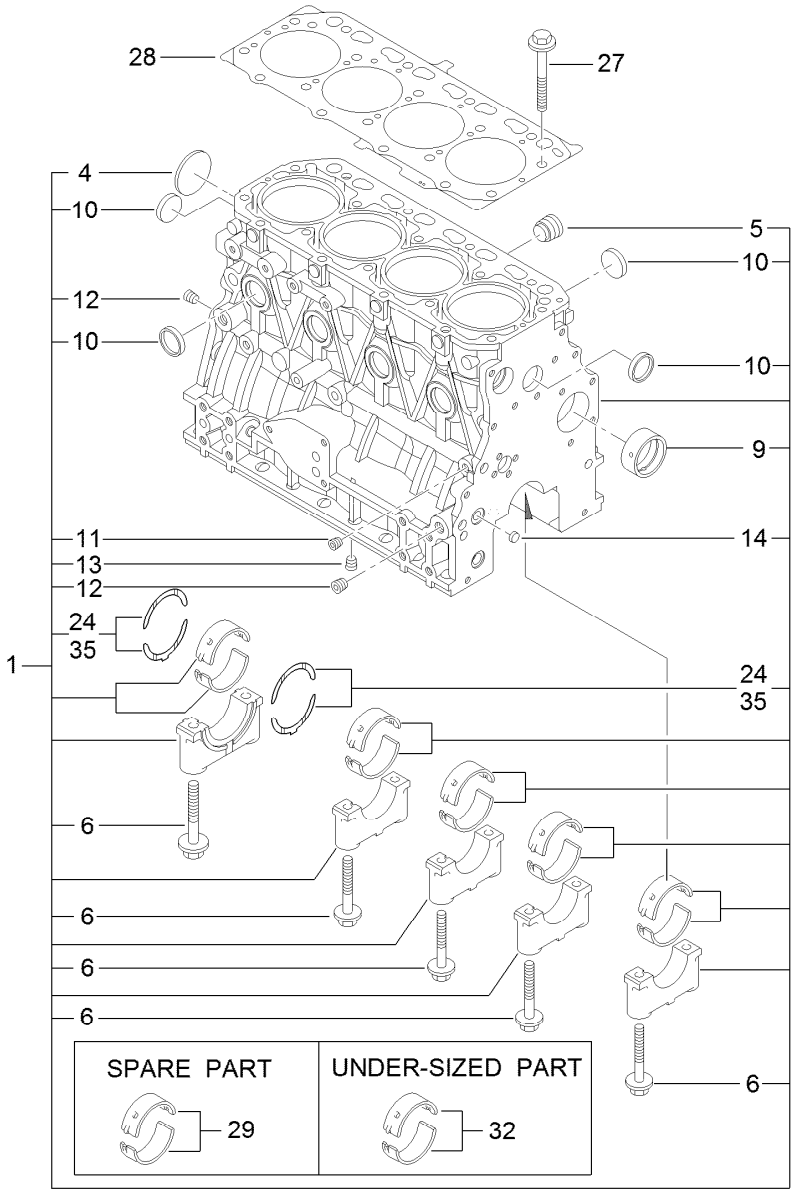

Cylinder Block Assembly

Ref.	Part Number	Qty.	Description
1	127-3127	1	Cylinder Block ASM
4	125-6980	1	Plug
5	125-7170	1	Plug
6	125-7007	10	Bolt
9	125-7108	1	Bushing
10	125-7239	8	Plug
11	125-6969	1	Plug
12	125-6973	2	Plug

Ref.	Part Number	Qty.	Description
13	125-6973	1	Plug
14	125-7237	1	Plug
24	125-7010	2	Metal-Thrust
27	125-7006	18	Bolt
28	127-3126	1	Gasket-Head, Cylinder
29	125-6981	5	Metal-Main
32	125-7009	5	Metal-Main (0.25)
35	125-7011	1	Metal-Thrust (0.25)

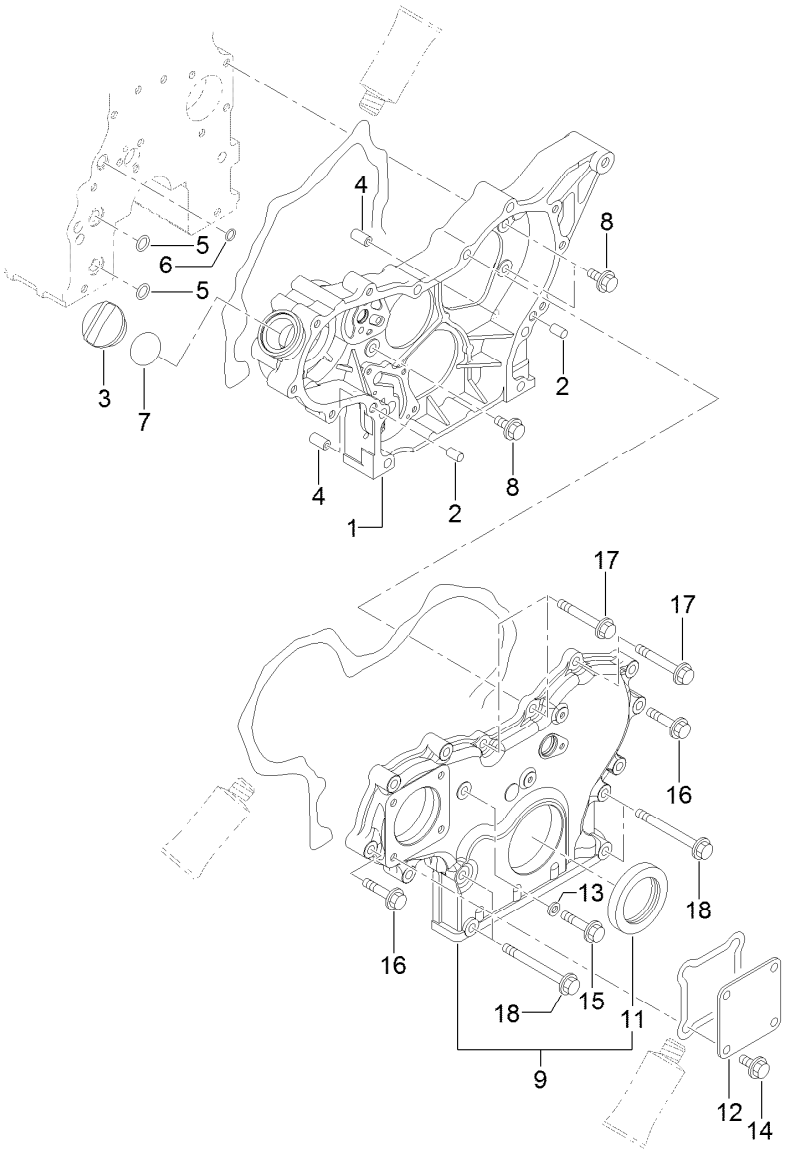

Gear Housing Assembly

Ref.	Part Number	Qty.	Description
1	127-3023	1	Case-Gear
2	125-6995	2	Pin
3	125-6972	1	Cover-Filler
4	125-7107	2	Pipe
5	125-6909	2	O-Ring
6	127-2973	1	O-Ring
7	125-7197	1	O-Ring
8	125-7214	3	Bolt
9	127-3024	1	Gearcase Cover ASM

Ref.	Part Number	Qty.	Description
11	125-6944	1	Seal-Oil
12	125-6977	1	Cover
13	125-7174	1	Washer-Seal
14	125-7214	4	Bolt
15	125-7217	1	Bolt
16	125-7218	7	Bolt
17	125-7222	3	Bolt
18	125-7224	4	Bolt

Cylinder Head and Cover Assembly

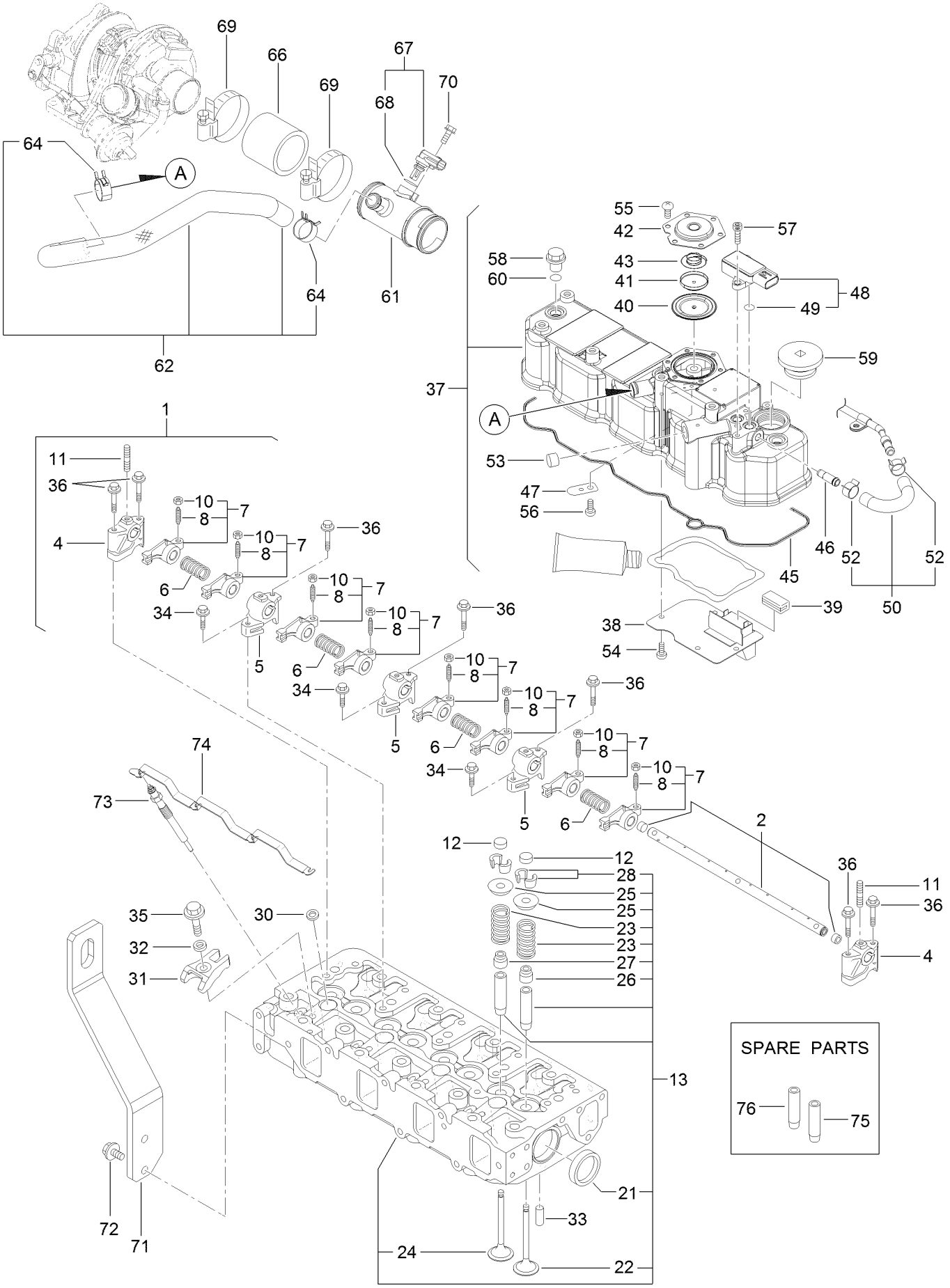

Cylinder Head and Cover Assembly (continued)

Ref.	Part Number	Qty.	Description
1	127-3005	1	Shaft ASM
2	127-3006	1	Shaft
4	127-2974	2	Support
5	127-2975	3	Support
6	127-2995	4	Spring
7	127-2989	8	Arm-Rocker
8	125-7013	8	Screw-Adjust, Valve
10	125-7014	8	Nut
11	127-3183	3	Stud
12	127-2996	8	Cap-Valve
13	127-3132	1	Cylinder Head ASM
21	125-7240	2	Plug
22	127-2990	4	Valve
23	127-3012	8	Spring
24	127-2994	4	Valve
25	127-3013	8	Retainer-Spring
26	127-2986	4	Seal-Stem, Valve
27	127-3027	4	Seal-Stem, Valve
28	127-3186	8	Pin-Cotter
30	127-3021	4	Gasket-Injector
31	127-3028	4	Retainer-Injector
32	127-2980	4	Washer-Injector
33	125-7184	2	Pin-Spring
34	125-7215	3	Bolt
35	125-7217	4	Bolt
36	125-7220	7	Bolt
37	127-3131	1	Cylinder Head Cover ASM
38	127-2988	1	Plate
39	125-7012	1	Baffle
40	125-6959	1	Diaphragm
41	125-6960	1	Plate
42	125-6961	1	Plate-Breather
43	125-6962	1	Spring-Diaphragm
45	127-3106	1	Gasket-Cover
46	127-3026	1	Joint
47	125-6994	1	Spring
48	127-3029	1	Sensor-Pressure
49	127-3032	2	O Ring-Sensor, Pressure
50	127-3040	1	Hose ASM
52	127-3041	2	Clip-Hose
53	125-6913	1	Plug
54	125-7186	4	Screw
55	125-7186	6	Screw
56	125-7186	1	Screw
57	127-3184	2	Bolt
58	125-6974	3	Knob
59	127-2978	1	Plug
60	93-0418	3	O-Ring
61	127-3128	1	Joint-Breather
62	127-3129	1	Breather Hose ASM
64	125-7040	2	Clip-Hose
66	127-3133	1	Hose-Intake
67	127-3030	1	Sensor-Temp, Air
68	127-3033	1	O-Ring
69	125-7190	2	Clamp-Hose
70	125-7208	1	Bolt
71	127-3130	1	Lifter-Engine
72	125-7214	2	Bolt
73	127-2991	4	Plug-Glow
74	127-3123	1	Connector-Glow Plug
75	127-2979	4	Guide
76	127-2997	4	Guide-Valve

Flywheel Housing and Oil Sump Assembly

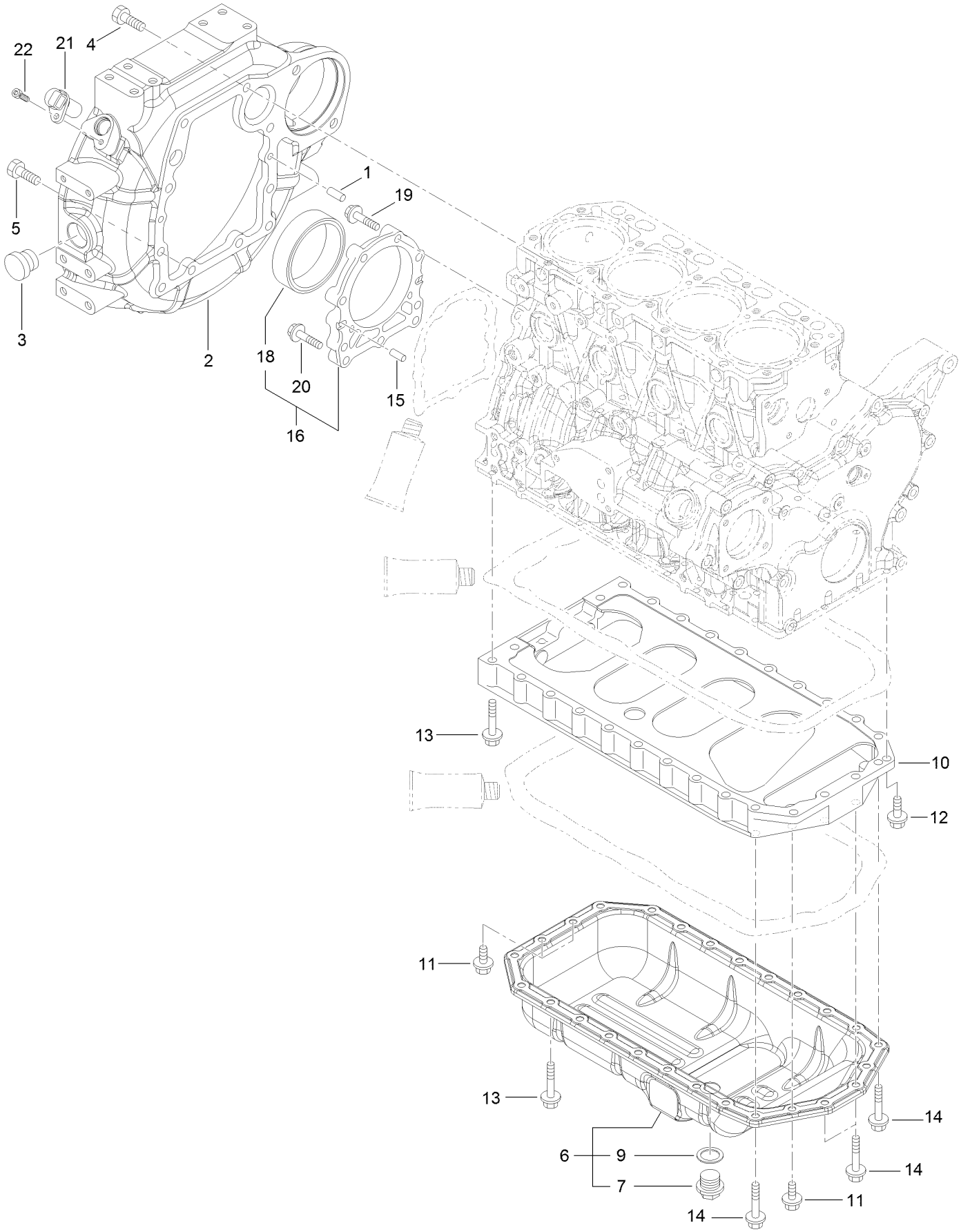

Flywheel Housing and Oil Sump Assembly (continued)

Ref.	Part Number	Qty.	Description
1	125-6995	2	Pin
2	127-3025	1	Housing-Flywheel
3	125-6910	1	Cap
4	125-7226	6	Bolt
5	125-7227	4	Bolt
6	125-7241	1	Oil Sump ASM
7	125-6912	1	Plug-Drain
9	125-7177	1	Washer-Seal
10	125-7035	1	Spacer
11	125-7214	4	Bolt
12	125-7215	2	Bolt
13	125-7219	20	Bolt
14	125-7220	4	Bolt
15	125-6995	2	Pin
16	125-6996	1	Case ASM
18	125-7106	1	Seal-Oil
19	125-7045	6	Bolt
20	125-7217	3	Bolt
21	127-3062	1	Sensor-Rev, Flywheel
22	127-3184	1	Bolt

Diesel Particulate Filter Assembly

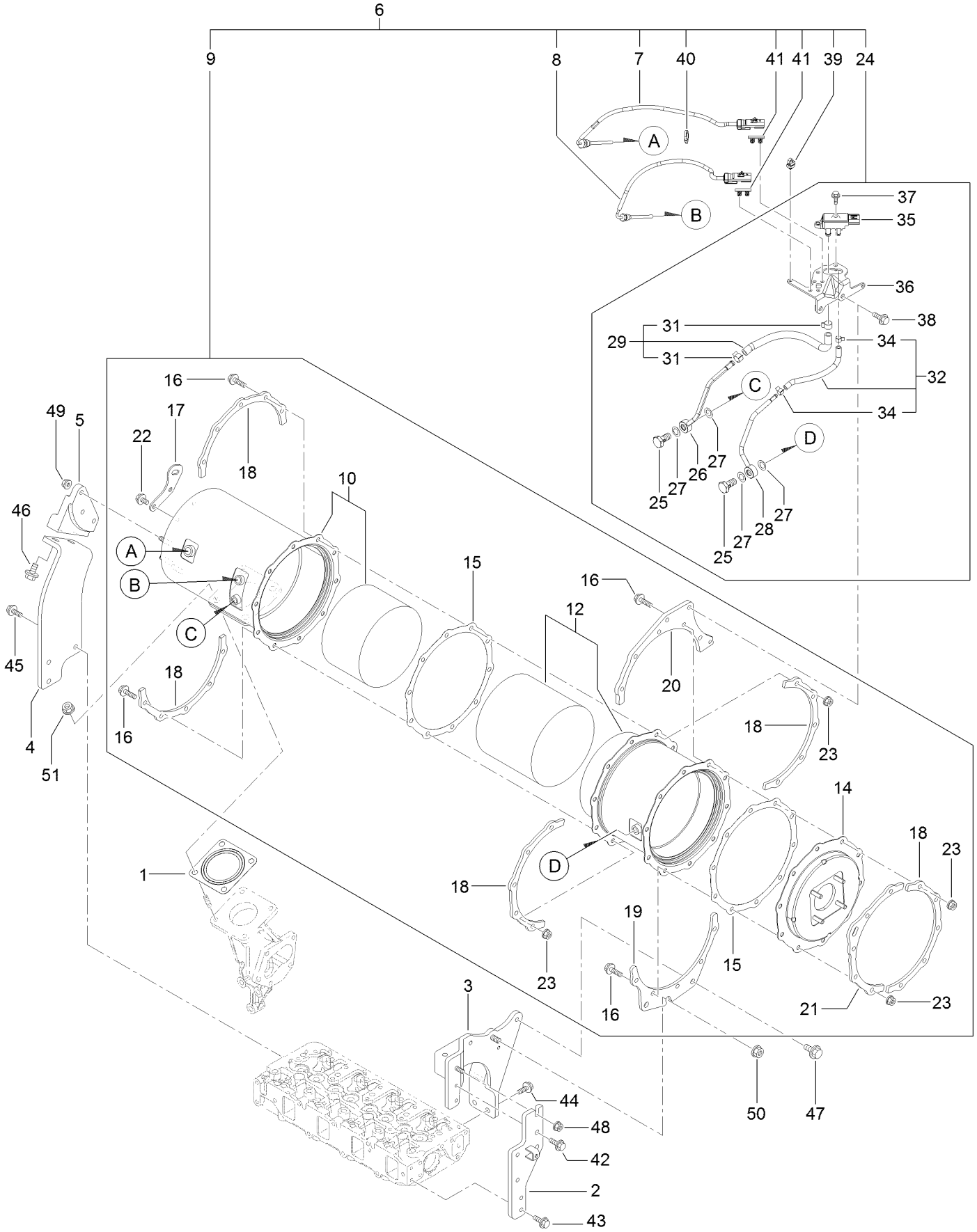

Diesel Particulate Filter Assembly (continued)

Ref.	Part Number	Qty.	Description
1	127-2987	1	Gasket-Silencer
2	127-3095	1	Stay-D P F
3	127-3148	1	Stay- D P F
4	127-3149	1	Stay-D P F
5	127-3150	1	Stay-D P F
6	127-3159	1	D P F Unit
7	127-4764	1	Sensor-Temp, Exhaust
8	127-3112	1	Sensor-Temp, Exhaust
9	127-3157	1	D P F ASM
10	127-3141	1	Case-Doc
12	127-3142R	1	Case-Filter, Soot-Recon
12	127-3142	1	Case-Filter, Soot
14	127-3143	1	Flange-Outlet
15	127-3162	2	Gasket-D P F
16	127-3055	20	Bolt
17	127-3144	1	Lifter-D P F
18	127-3145	5	Stiffener-D P F, A
19	127-3146	1	Stiffener-D P F, B
20	127-3158	1	Stiffener-D P F, D
21	127-3147	1	Stiffener-D P F, C
22	125-7213	2	Bolt
23	125-7229	20	Nut
24	127-3163	1	Pressure Sensor Unit
25	127-3039	2	Bolt-Joint, Pipe
26	127-3164	1	Exhaust Pressure Pipe ASM

Ref.	Part Number	Qty.	Description
27	127-3056	4	Gasket-Sensor
28	127-3165	1	Exhaust Pressure Pipe ASM
29	127-3114	1	Exhaust Hose ASM
31	127-3057	2	Clip-Hose
32	127-3059	1	Exhaust Pressure Hose ASM
34	127-3058	2	Clip-Hose
35	127-3060	1	Sensor-Pressure
36	127-3061	1	Bracket-Sensor, Pressure
37	125-7208	2	Bolt
38	125-7595	2	Bolt
39	127-3087	1	Band-Clip
40	127-3124	1	Band
41	127-3088	2	Clip-Connnector
42	125-7595	2	Bolt
43	125-7595	2	Bolt
44	125-7595	2	Bolt
45	125-7595	3	Bolt
46	127-3179	2	Bolt
47	127-3179	2	Bolt
48	125-7229	1	Nut
49	125-7229	3	Nut
50	125-7230	1	Nut
51	125-7230	4	Nut

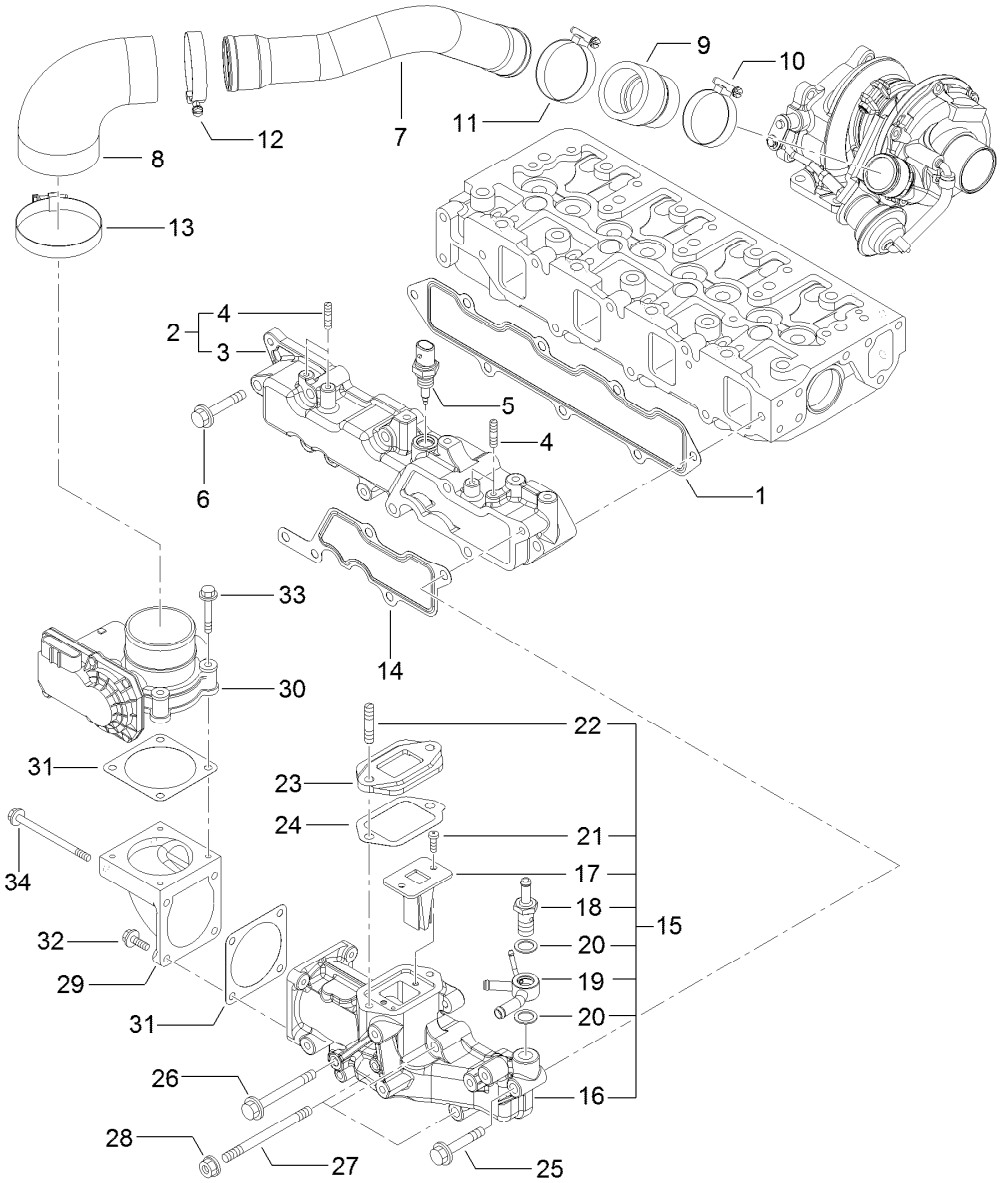

Suction Manifold Assembly

Ref.	Part Number	Qty.	Description
1	127-3107	1	Gasket-Manifold, Intake
2	127-3135	1	Intake Manifold ASM
3	127-3134	1	Manifold-Intake
4	127-3180	4	Stud
5	127-3031	1	Sensor-Temp, Air
6	125-7220	5	Bolt
7	127-3152	1	Duct-Suction
8	127-3096	1	Joint-Rubber
9	127-3153	1	Joint-Rubber
10	125-7189	1	Clamp-Hose
11	127-3170	1	Clamp-Hose
12	125-7190	1	Clamp-Hose
13	127-3171	1	Clamp-Hose
14	127-3034	1	Gasket-Collector
15	127-3093	1	Intake Collector ASM
16	127-3092	1	Collector-Intake
17	127-3139	1	Valve-Reed

Ref.	Part Number	Qty.	Description
18	127-3080	1	Joint-Hose
19	127-3081	1	Joint-Hose
20	127-3166	2	Washer-Seal
21	127-3168	2	Screw
22	127-3181	2	Stud
23	127-3045	1	Spacer-Valve, E G R
24	127-3046	1	Gasket-E G R
25	125-7220	1	Bolt
26	127-3178	1	Bolt
27	127-3182	3	Stud
28	125-7229	3	Nut
29	127-3035	1	Bend-Inlet
30	127-3036	1	Body-Throttle
31	127-3037	2	Gasket-Throttle
32	125-7209	2	Bolt
33	125-7211	4	Bolt
34	127-3177	2	Bolt

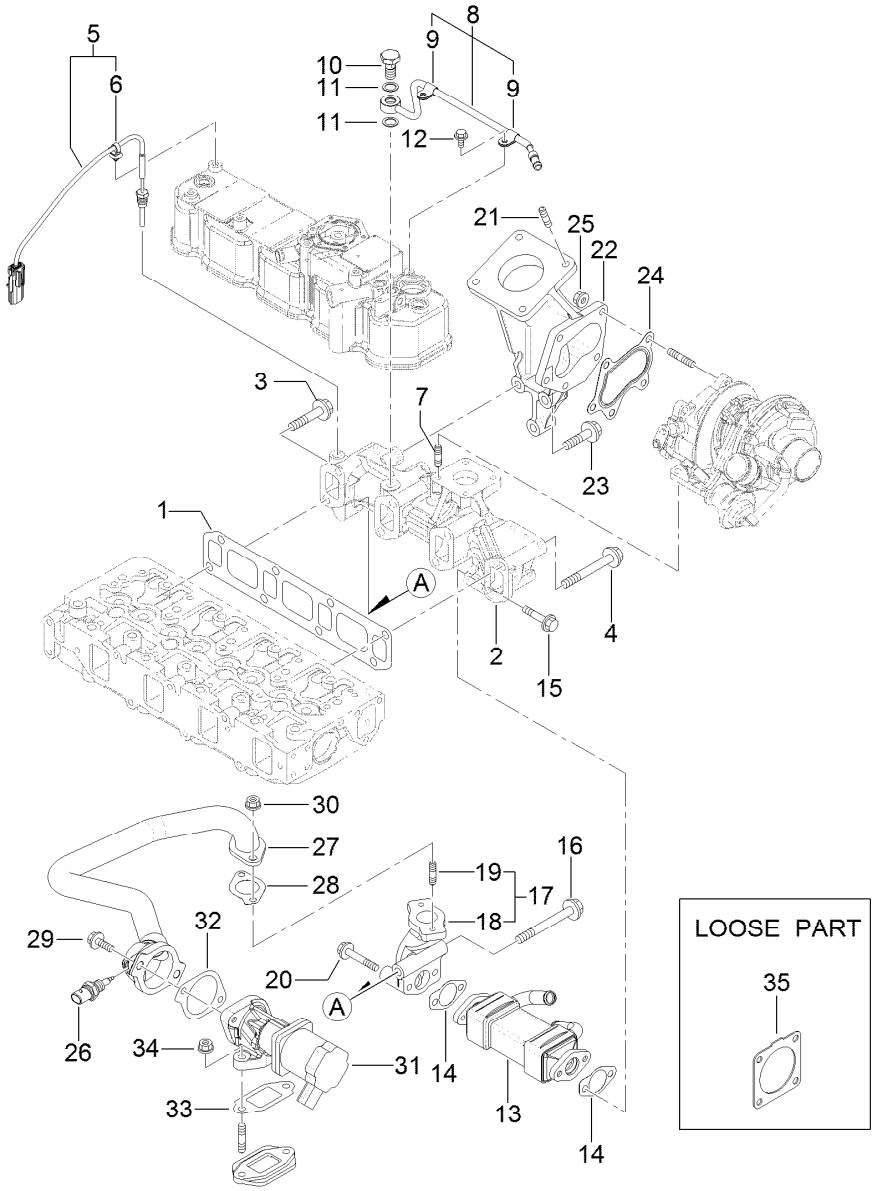

Exhaust Manifold Assembly

Ref.	Part Number	Qty.	Description
1	127-3108	1	Gasket-Manifold, Exhaust
2	127-3136	1	Manifold-Exhaust
3	127-3094	1	Bolt
4	127-3044	7	Bolt-M10
5	127-3140	1	Sensor-Temp, Exhaust
6	127-3087	1	Band-Clip
7	125-7043	4	Stud
8	127-3038	1	Exhaust Pipe ASM
9	127-3173	2	Clamp
10	127-3039	1	Bolt-Joint, Pipe
11	127-3174	2	Gasket
12	125-7206	2	Bolt
13	127-3042	1	Cooler-E G R
14	127-3043	2	Gasket-Cooler, E G R
15	127-2976	2	Bolt
16	127-3022	1	Bolt-Flange
17	127-3048	1	E G R Pipe ASM
18	127-3049	1	Pipe-Out, E G R

Ref.	Part Number	Qty.	Description
19	125-7043	2	Stud
20	125-7220	2	Bolt
21	127-2984	4	Stud
22	127-3137	1	Pipe-Exhaust
23	127-3138	3	Bolt-Flange
24	125-7071	1	Gasket
25	125-7229	5	Nut
26	127-3047	1	Sensor-Gas Temp, E G R
27	127-3109	1	E G R Pipe ASM
28	127-3016	1	Gasket
29	125-7215	2	Bolt
30	125-7229	2	Nut
31	127-3110	1	Valve-E G R
32	127-3050	1	Gasket-Intake Valve, E G R
33	127-3051	1	Gasket-Out Valve, E G R
34	125-7229	2	Nut
35	127-3019	1	Gasket

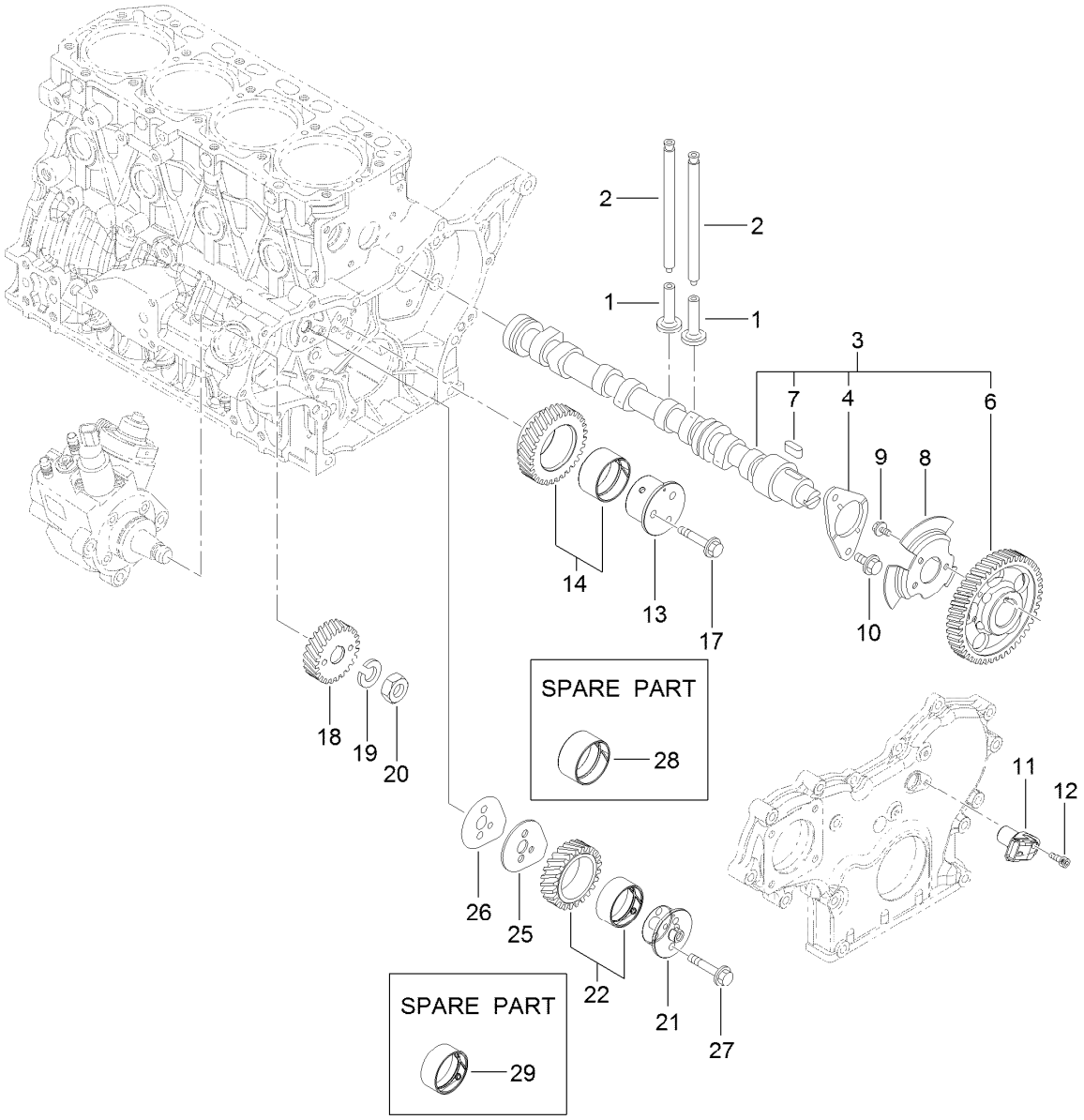

Camshaft and Driving Gear Assembly

Ref.	Part Number	Qty.	Description
1	125-7016	8	Tappet
2	125-7017	8	Rod-Push
3	127-3113	1	Camshaft ASM
4	125-7008	1	Metal-Thrust
6	127-3052	1	Gear-Camshaft
7	125-7185	1	Key
8	127-3053	1	Pulser-Camshaft
9	125-7205	3	Bolt
10	125-7213	2	Bolt
11	127-3054	1	Sensor-Rev, Gear
12	127-3184	1	Bolt
13	127-3063	1	Shaft-Idle, Gear A

Ref.	Part Number	Qty.	Description
14	127-3066	1	Idle Gear A ASM
17	125-7219	3	Bolt
18	127-3070	1	Gear-Pump, Supply
19	127-3167	1	Washer-Spring
20	127-3185	1	Nut-Lock
21	127-3064	1	Shaft-Idle, Gear B
22	127-3067	1	Idle Gear B ASM
25	127-3068	1	Plate-Idle, Shaft
26	127-3069	1	Gasket-Idle, Shaft B
27	125-7218	2	Bolt
28	125-6927	1	Bushing
29	127-3065	1	Bushing

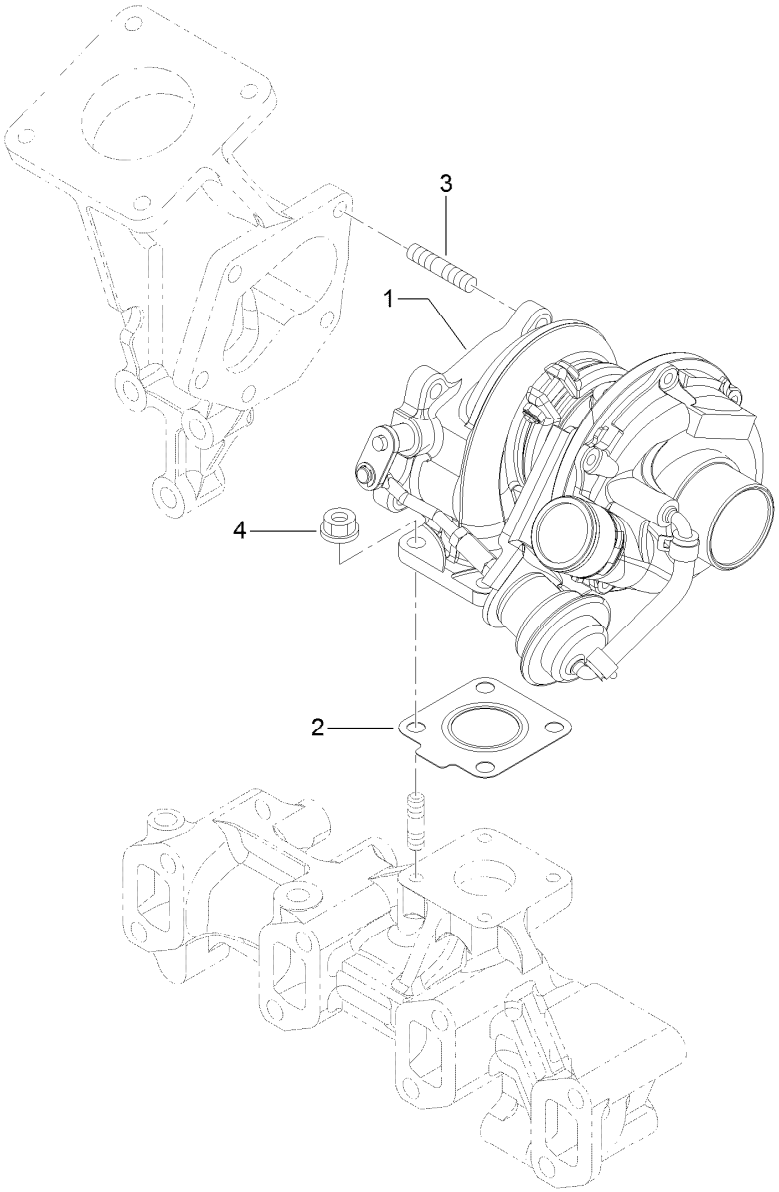

Turbine Assembly

Ref.	Part Number	Qty.	Description
1	127-3151	1	Turbine ASM
2	125-7070	1	Gasket
3	125-6906	5	Stud
4	125-7229	4	Nut

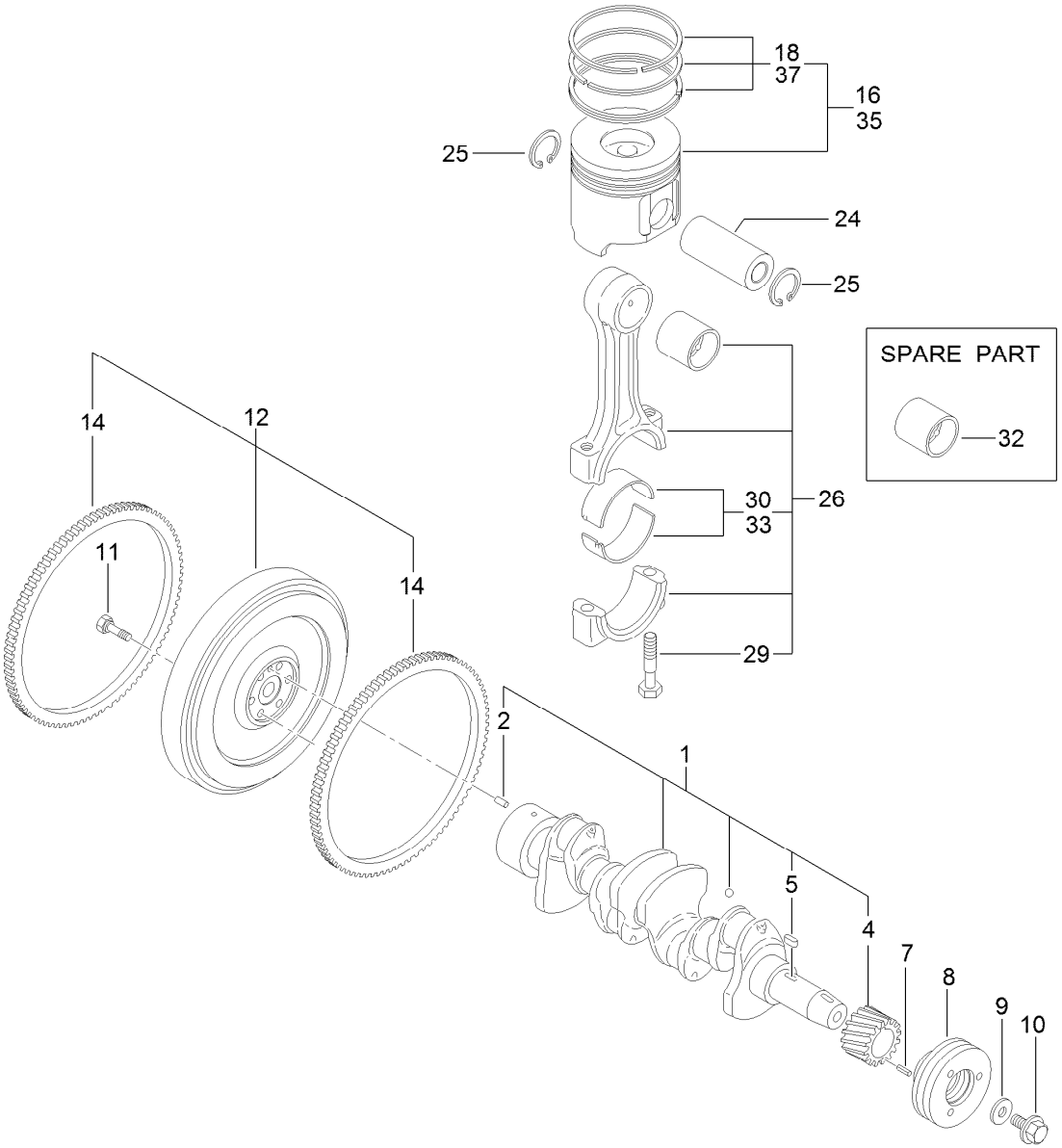

Crankshaft and Piston Assembly

Ref.	Part Number	Qty.	Description
1	125-7091	1	Crankshaft ASM
2	125-6995	1	Pin
4	125-6937	1	Gear
5	125-7185	1	Key
7	125-7182	1	Pin-Spring
8	125-6925	1	V-Pulley
9	125-7109	1	Washer
10	125-6956	1	Bolt
11	125-6951	6	Bolt
12	127-3160	1	Flywheel ASM
14	125-6943	1	Gear

Ref.	Part Number	Qty.	Description
16	127-3097	4	Piston ASM
18	127-3098	4	Piston Ring ASM
24	125-7030	4	Pin
25	125-7180	8	Ring
26	125-7242	4	Connecting Rod ASM
29	125-6955	8	Bolt
30	125-7018	4	Pin-Crank
32	125-6997	4	Pin-Piston
33	125-7019	4	Pin-Crank (.25)
35	127-3099	4	Piston ASM (0.25 O.S.)
37	127-3100	4	Piston Ring ASM (0.25 O.S.)

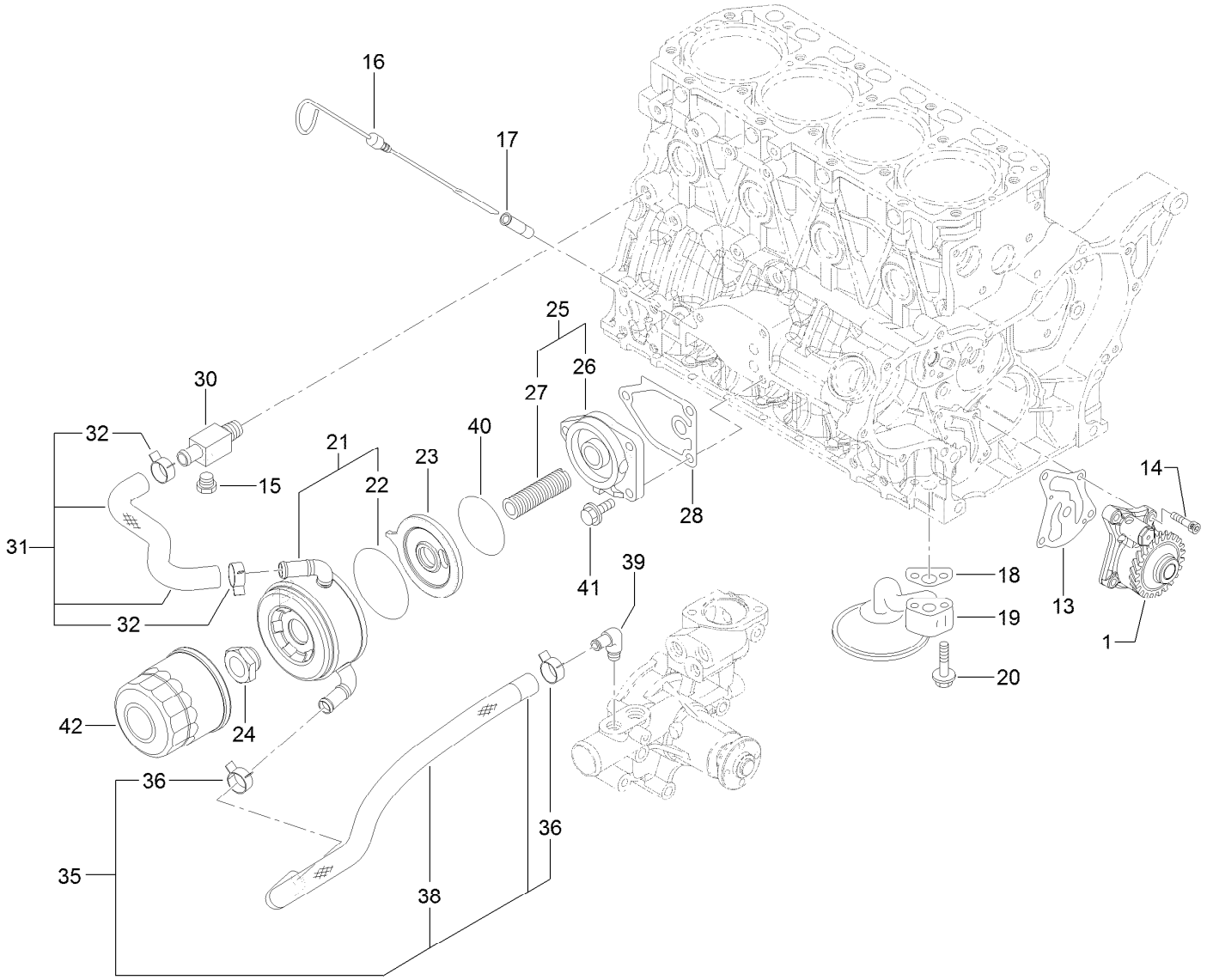

Lubrication and Oil System Assembly

Ref.	Part Number	Qty.	Description
1	127-3101	1	Oil Lube Pump ASM
13	127-3004	1	Gasket
14	125-7232	4	Bolt
15	125-7171	1	Plug-Drain
16	125-6987	1	Dipstick
17	125-6954	1	Guide-Dipstick
18	125-7022	1	Gasket
19	125-7023	1	Pipe ASM
20	125-7217	2	Bolt
21	127-3014	1	Cooler ASM
22	127-2985	1	O-Ring
23	127-3015	1	Bracket-Cooler
24	125-7041	1	Nut-Cooler, Oil
25	127-3009	1	Bracket ASM

Ref.	Part Number	Qty.	Description
26	125-6930	1	Bracket
27	127-3010	1	Stud
28	125-7024	1	Gasket
30	125-6990	1	Joint
31	127-3102	1	Pipe-Cooling, Water
32	125-7162	2	Clip
35	127-3103	1	Hose-Cooling, Water
36	125-7162	2	Clip
38	127-3007	1	Tube
39	125-7001	1	Elbow
40	127-3176	1	O-Ring
41	125-7595	3	Bolt
42	125-7025	1	Filter-Engine, Oil

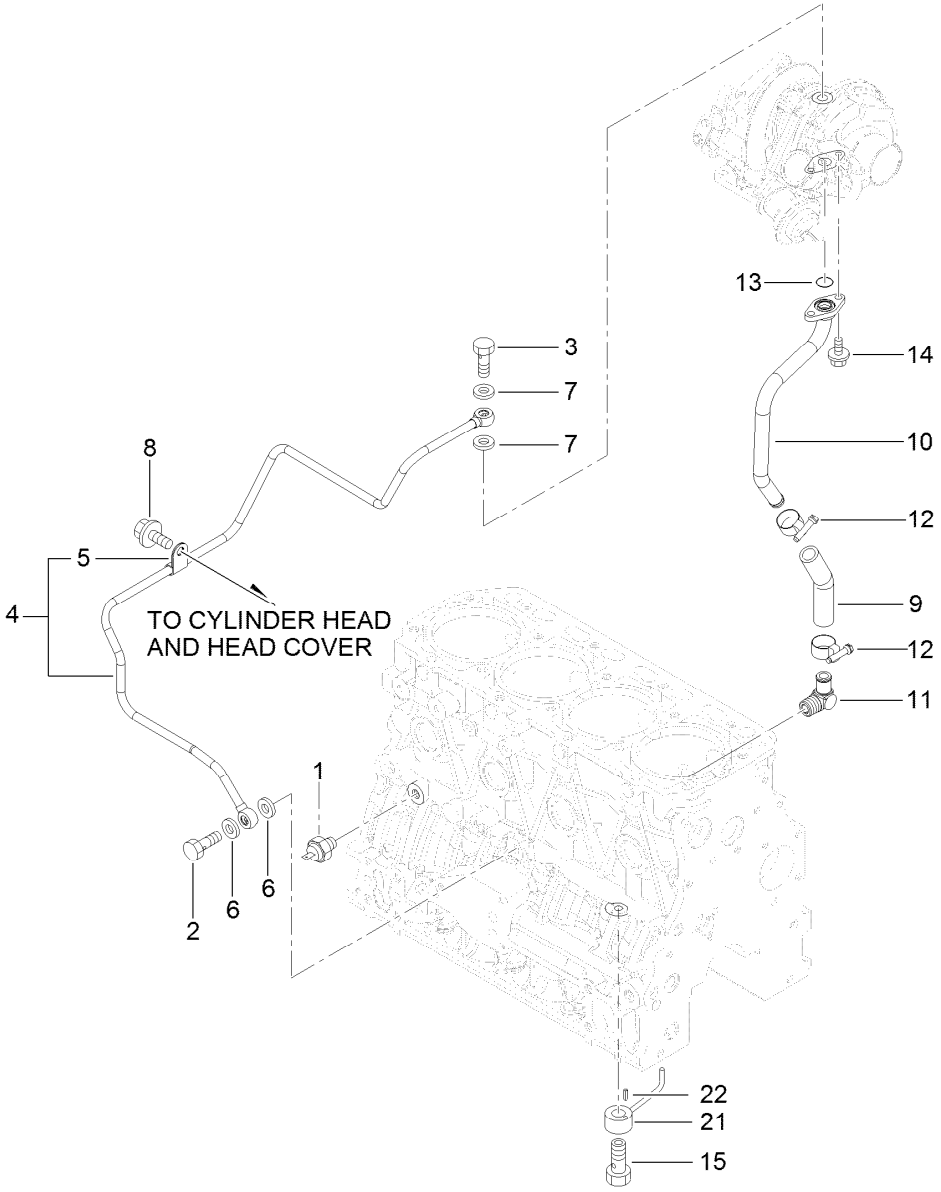

Lubrication Oil Line Assembly

Ref.	Part Number	Qty.	Description
1	125-6918	1	Switch-Oil
2	125-6975	1	Bolt-Joint, Pipe
3	125-6952	1	Bolt-Joint, Pipe
4	127-3154	1	Lube Oil Pipe ASM
5	125-6976	1	Retainer
6	125-7175	2	Washer-Seal
7	125-7193	2	Gasket
8	93-0362	1	Bolt
9	127-2992	1	Joint

Ref.	Part Number	Qty.	Description
10	127-3155	1	Pipe-Lube, Oil
11	127-3003	1	Elbow
12	127-3169	2	Clamp-Hose
13	125-7198	1	O-Ring
14	125-7208	2	Bolt
15	125-7105	4	Check Valve ASM
21	125-7098	4	Nozzle
22	125-7182	4	Pin-Spring

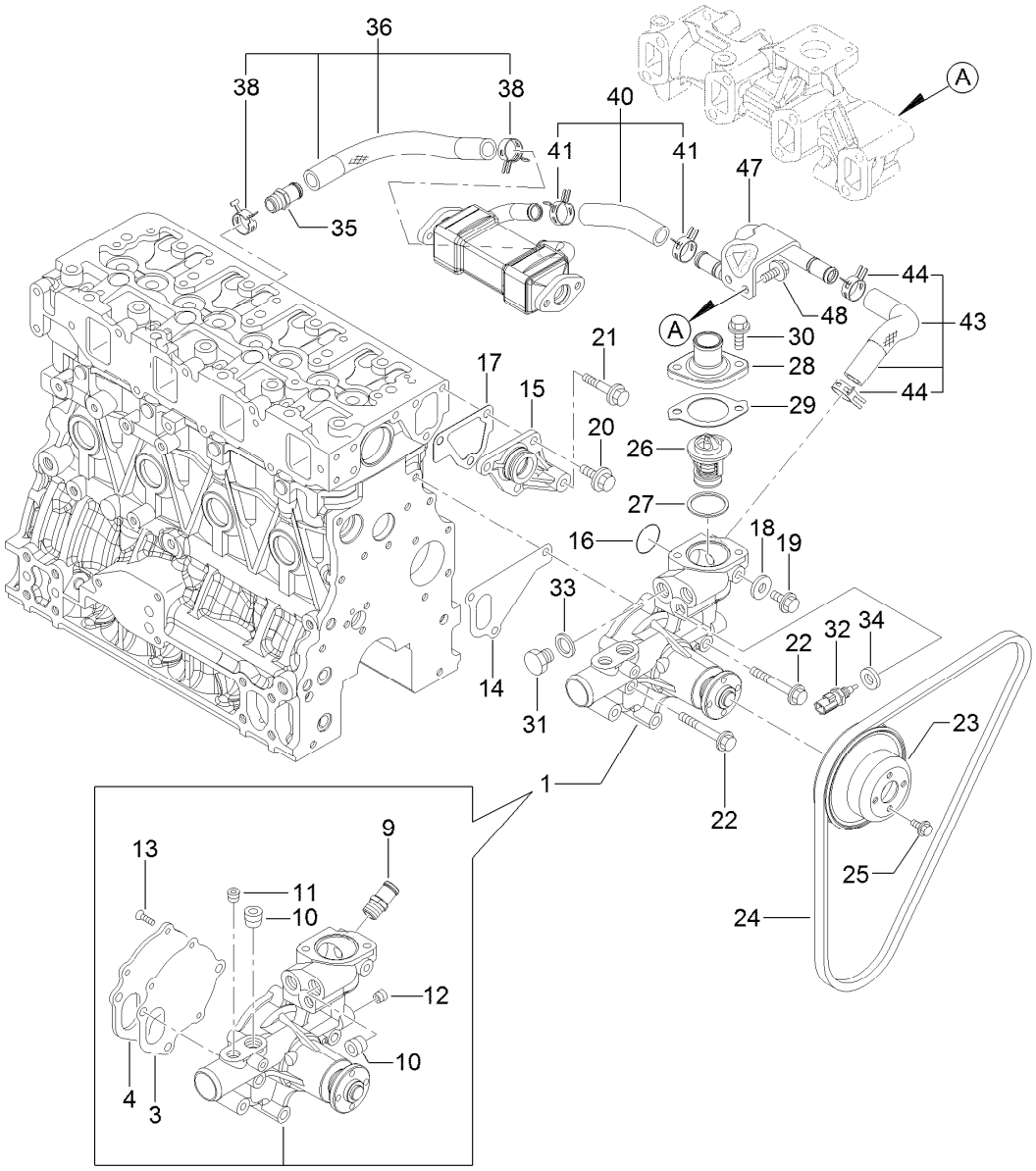

Cooling Water System Assembly

Ref.	Part Number	Qty.	Description
1	127-3071	1	Water Pump ASM
3	125-6998	1	Gasket
4	125-6999	1	Plate
9	127-3017	1	Joint
10	125-7123	2	Plug
11	127-3175	1	Plug
12	125-7195	1	Plug
13	125-7234	3	Screw
14	125-7047	1	Gasket
15	125-6986	1	Joint
16	125-7048	1	O-Ring
17	125-6978	1	Gasket
18	125-7192	1	Gasket
19	93-0362	1	Bolt
20	125-7214	3	Bolt
21	125-7219	1	Bolt
22	125-7222	3	Bolt
23	125-7039	1	V-Pulley
24	127-2998	1	V-Belt

Ref.	Part Number	Qty.	Description
25	125-7206	4	Bolt
26	125-7029	1	Thermostat
27	125-7026	1	Gasket
28	125-7034	1	Cover
29	125-7110	1	Gasket
30	125-7594	2	Bolt
31	125-6953	1	Plug
32	125-7124	1	Sensor-Thermostat, CW
33	125-6979	1	Gasket
34	125-7176	1	Washer-Seal
35	127-3017	1	Joint
36	127-3072	1	Water In Pipe ASM
38	127-3020	2	Clip-Hose
40	127-3115	1	Water Out Pipe ASM
41	127-3020	2	Clip-Hose
43	127-3116	1	Water Out Pipe ASM
44	127-3020	2	Clip-Hose
47	127-3117	1	Pipe-Out, CW
48	125-7214	2	Bolt

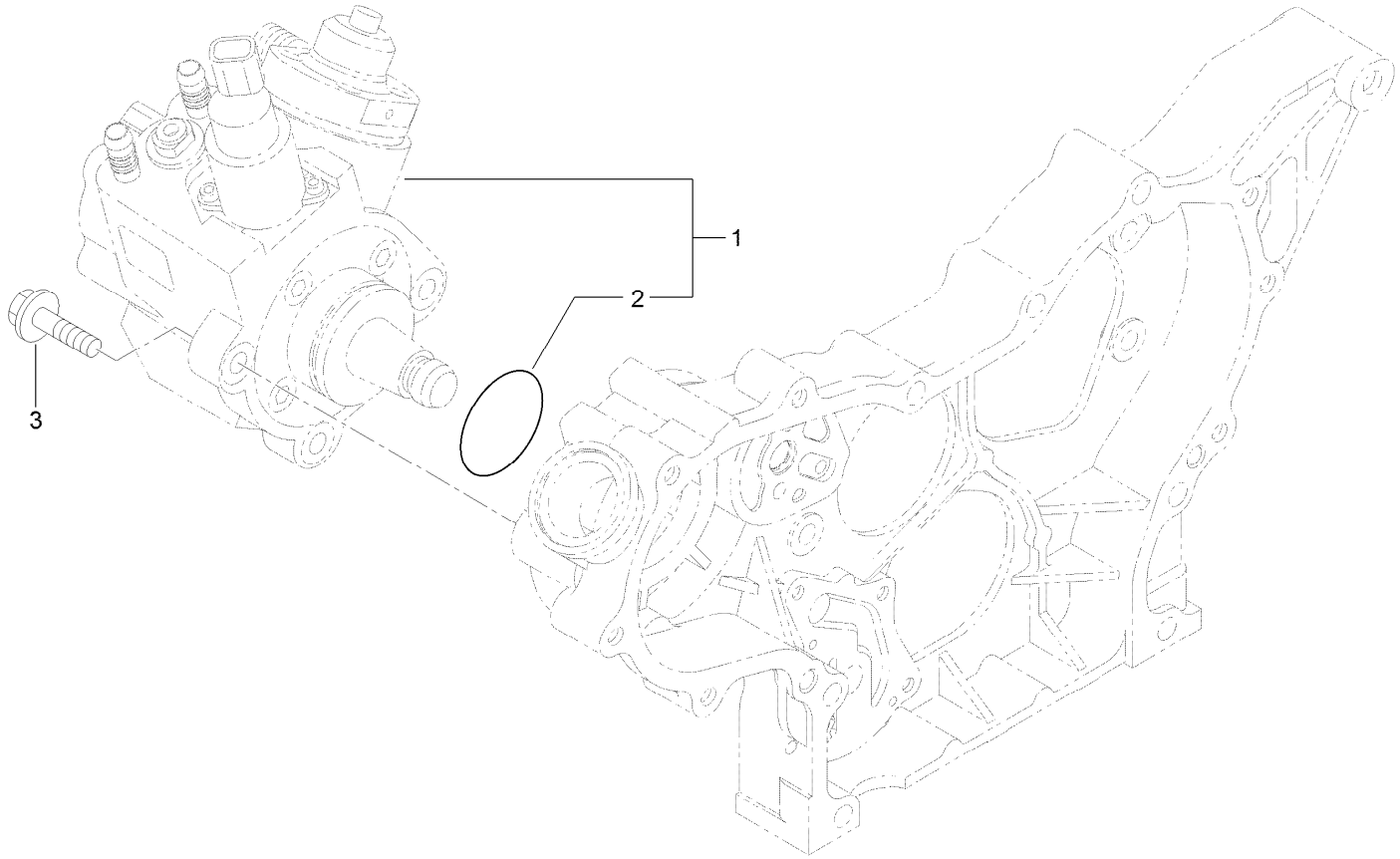

Fuel System Assembly

Ref.	*Part Number*	*Qty.*	*Description*
1	127-3073	1	Fuel Pump ASM
2	127-3074	1	O-Ring
3	125-7216	3	Bolt

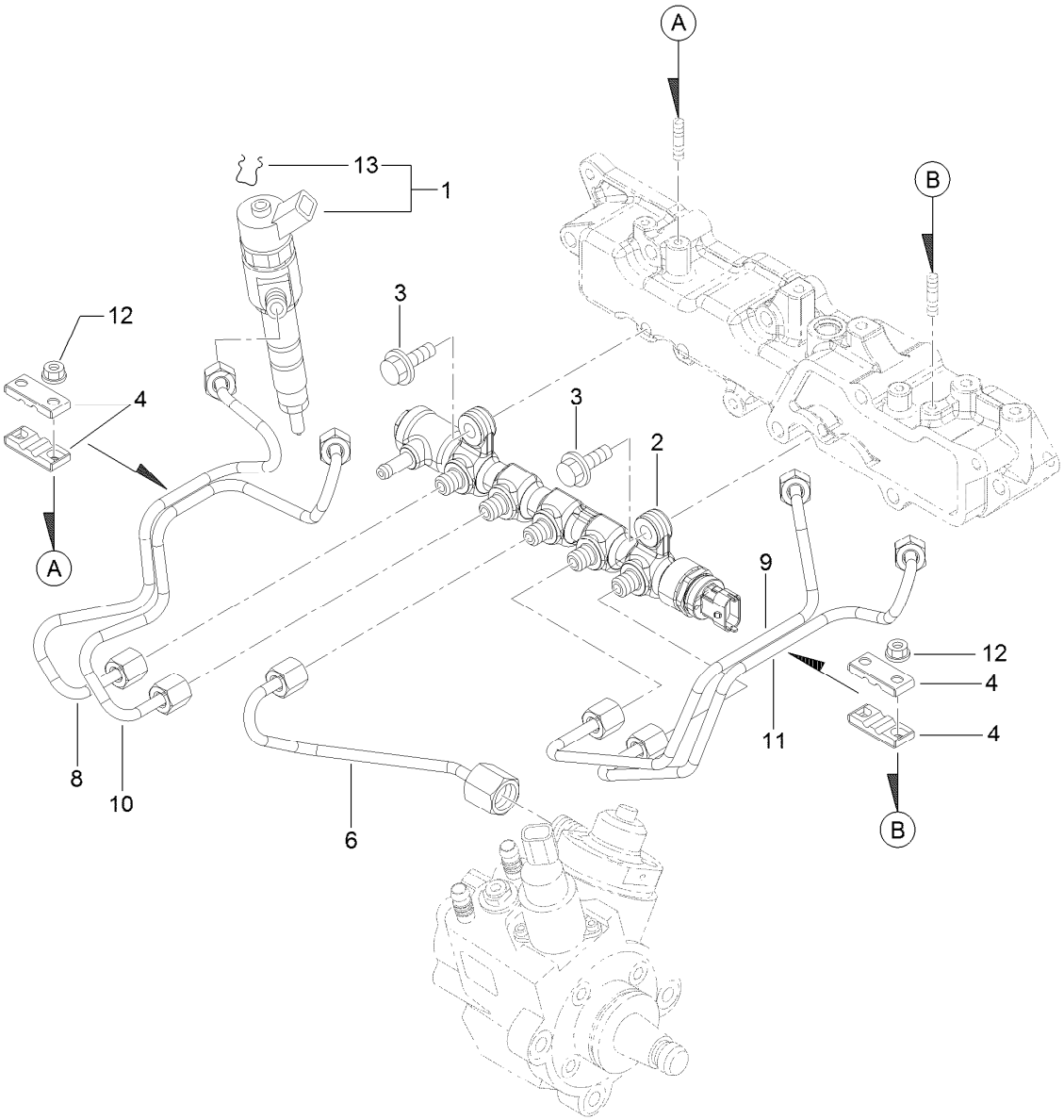

Fuel Injection Valve Assembly

Ref.	*Part Number*	*Qty.*	*Description*
1	127-3104	4	Injector ASM
2	127-3118	1	Rail ASM
3	125-7215	2	Bolt
4	127-2982	4	Retainer
6	127-3082	1	Rail In Pipe ASM
8	127-3121	1	Injection Pipe ASM
9	127-3083	1	Injection Pipe ASM
10	127-3122	1	Injection Pipe ASM
11	127-3084	1	Injection Pipe ASM
12	125-7231	4	Nut
13	130-7430	4	Ring-Retaining

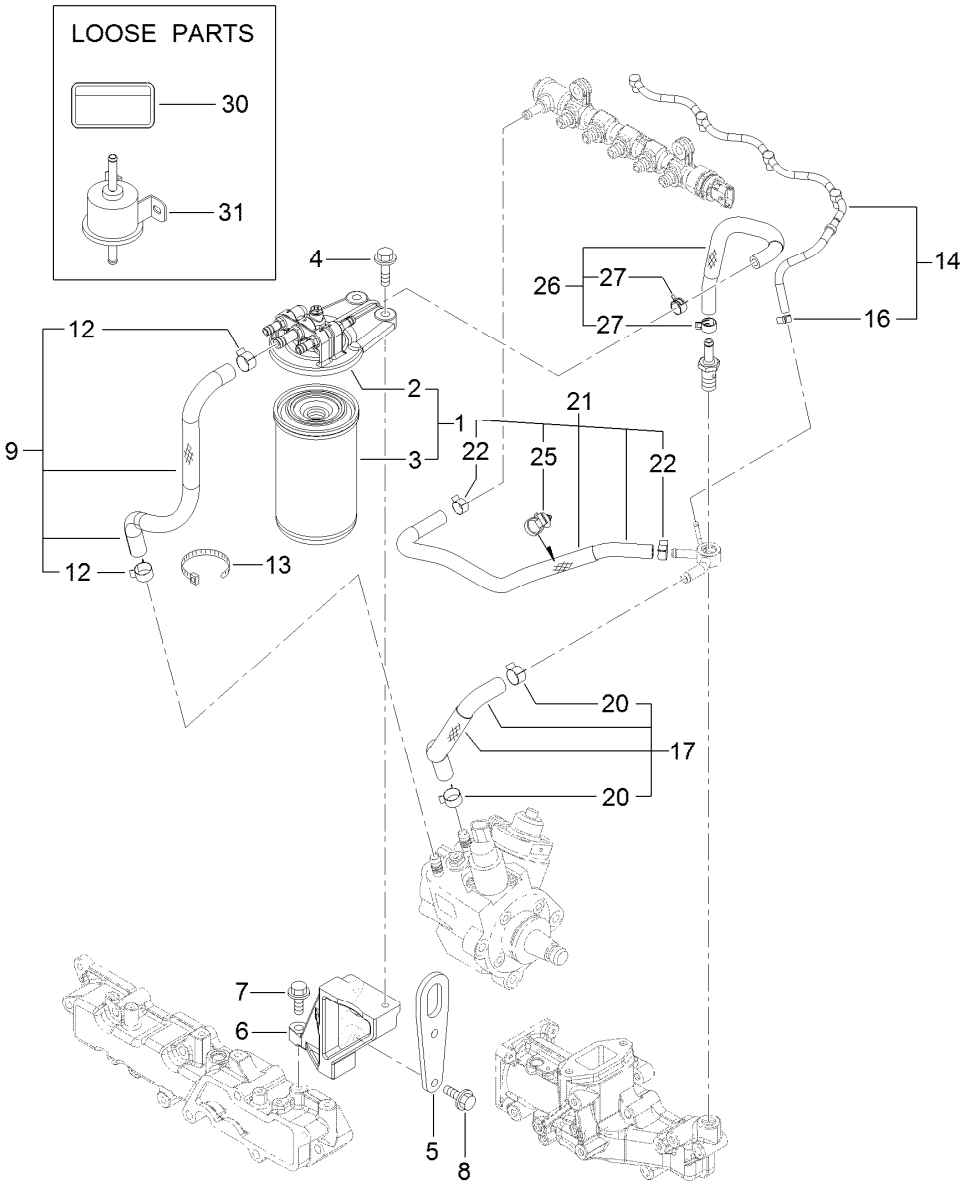

Fuel Line Assembly

Ref.	Part Number	Qty.	Description
1	127-3075	1	Fuel/Oil Filter ASM
2	127-3076	1	Fuel/Oil Filter Bracket ASM
3	125-8752	1	Filter-Fuel/Oil
4	125-7216	2	Bolt
5	127-3091	1	Lifter-Engine
6	127-3105	1	Stay-Bracket, Filter
7	125-7215	1	Bolt
8	125-7216	2	Bolt
9	127-3077	1	Fuel Pipe ASM
12	125-7191	2	Clamp-Hose
13	127-2981	1	Band

Ref.	Part Number	Qty.	Description
14	127-3120	1	Fuel Pipe ASM
16	127-3172	1	Clamp-Hose
17	127-3078	1	Fuel Pipe ASM
20	125-7191	2	Clamp-Hose
21	127-3119	1	Fuel Pipe ASM
22	127-2950	2	Clip-Hose
25	127-3087	1	Band-Clip
26	127-3079	1	Fuel Pipe ASM
27	127-2950	2	Clip-Hose
30	125-6900	1	Label-Caution, Fuel Oil
31	127-3008	1	Fuel Feed Pump ASM

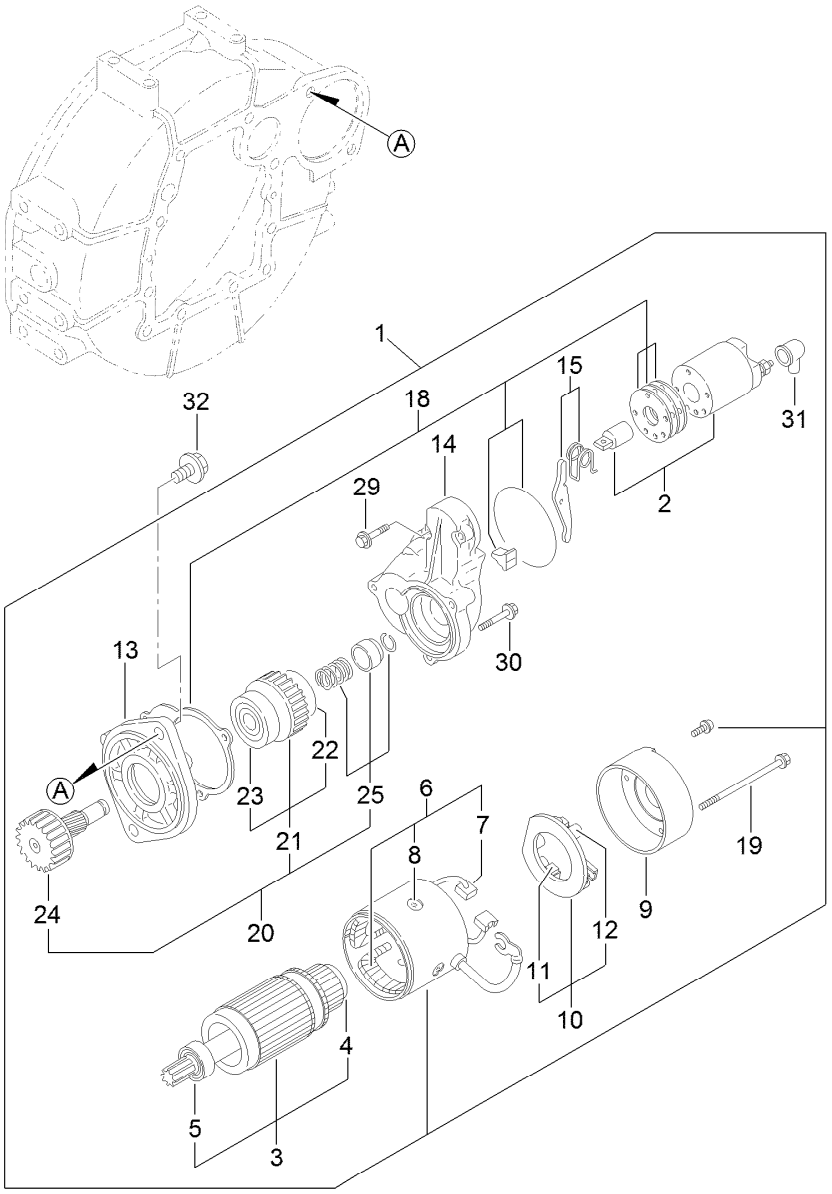

Starting Motor Assembly

Ref.	Part Number	Qty.	Description
1	125-7003	1	Starter
2	125-7004	1	Switch ASM
3	125-7112	1	Armature ASM
4	125-7252	1	Bearing-Ball
5	125-7249	1	Bearing, Ball
6	125-7113	1	Field Coil ASM
7	125-7114	2	Brush
8	125-7163	4	Screw
9	125-7115	1	Cover
10	125-7116	1	Brush Holder ASM
11	125-7114	2	Brush
12	125-7036	4	Spring
13	125-7164	1	Case-Gear
14	125-7005	1	Housing

Ref.	Part Number	Qty.	Description
15	125-7165	1	Lever Set
18	125-7037	1	Dust Cover ASM
19	125-7117	2	Bolt-Through
20	125-7166	1	Pinion ASM
21	125-7250	1	Clutch ASM
22	125-7251	1	Bearing-Ball
23	125-7253	1	Bearing-Ball
24	125-7167	1	Shaft
25	125-7168	1	Stopper Set
29	125-7210	2	Bolt
30	125-7211	3	Bolt
31	125-7169	1	Cover
32	125-7225	2	Bolt

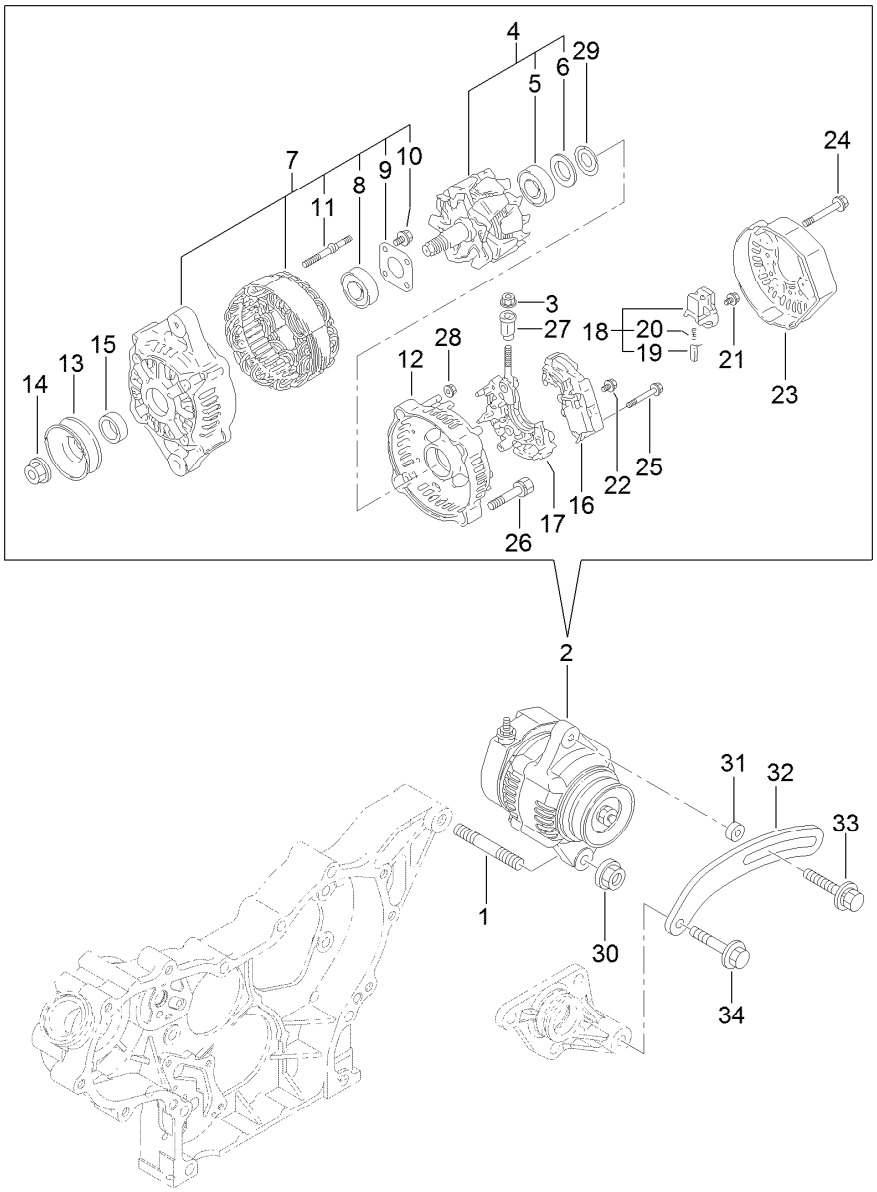

Generator Assembly

Ref.	Part Number	Qty.	Description
1	127-3011	1	Stud
2	125-7120	1	Alternator-12V
3	127-3190	1	Nut
4	127-2951	1	Rotor ASM
5	127-2983	1	Bearing-Ball
6	127-2962	1	Cover
7	127-2952	1	Frame ASM
8	127-2958	1	Bearing-Ball
9	127-2959	1	Plate-Retainer
10	127-2960	4	Screw
11	127-2961	2	Stud
12	127-2953	1	Frame ASM
13	127-2954	1	Pulley
14	127-2955	1	Nut
15	127-2957	1	Collar
16	127-3002	1	Regulator ASM
17	127-2963	1	Holder

Ref.	Part Number	Qty.	Description
18	127-2993	1	Holder
19	127-2956	2	Brush ASM
20	127-2964	2	Spring
21	127-2965	6	Screw
22	127-2966	1	Screw
23	127-2999	1	Cover
24	127-2967	3	Bolt
25	127-2968	2	Screw
26	127-2969	2	Bolt
27	127-2970	1	Bushing-Insulation
28	127-2971	2	Nut
29	127-2972	1	Washer
30	125-7230	1	Nut
31	125-6947	1	Spacer
32	127-2977	1	Adjuster
33	125-7134	1	Bolt
34	125-7219	1	Bolt

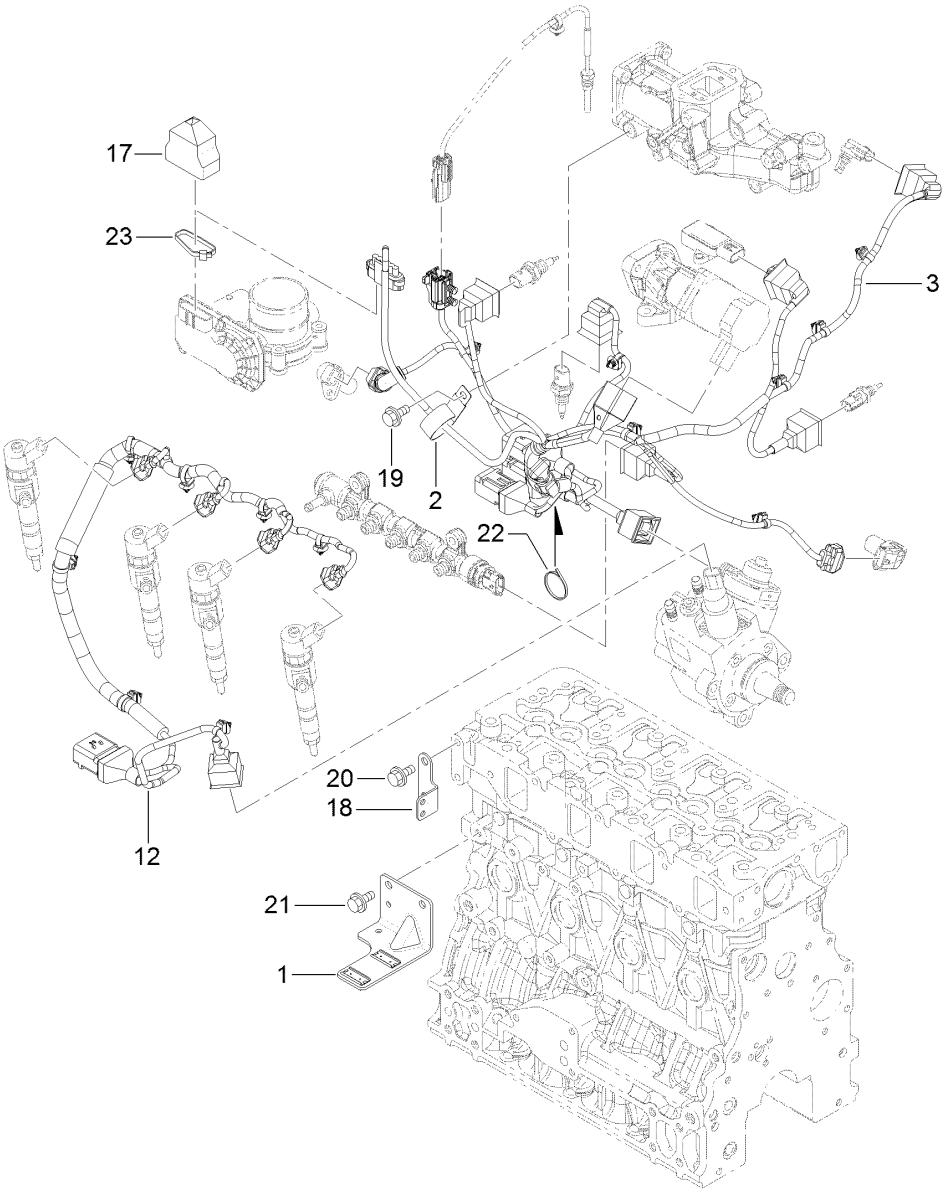

Electric Parts Assembly

Ref.	*Part Number*	*Qty.*	*Description*
1	127-3086	1	Bracket-Connector
2	127-3018	1	Clip
3	127-3156	1	Harness B-E C O, Engine
12	127-3125	1	Harness C
17	127-3089	1	Boot-Type, Cap
18	127-3090	1	Bracket-Harness
19	93-0362	1	Bolt
20	93-0362	2	Bolt
21	93-0362	2	Bolt
22	127-3187	1	Band
23	127-3188	1	Band

Gasket Set

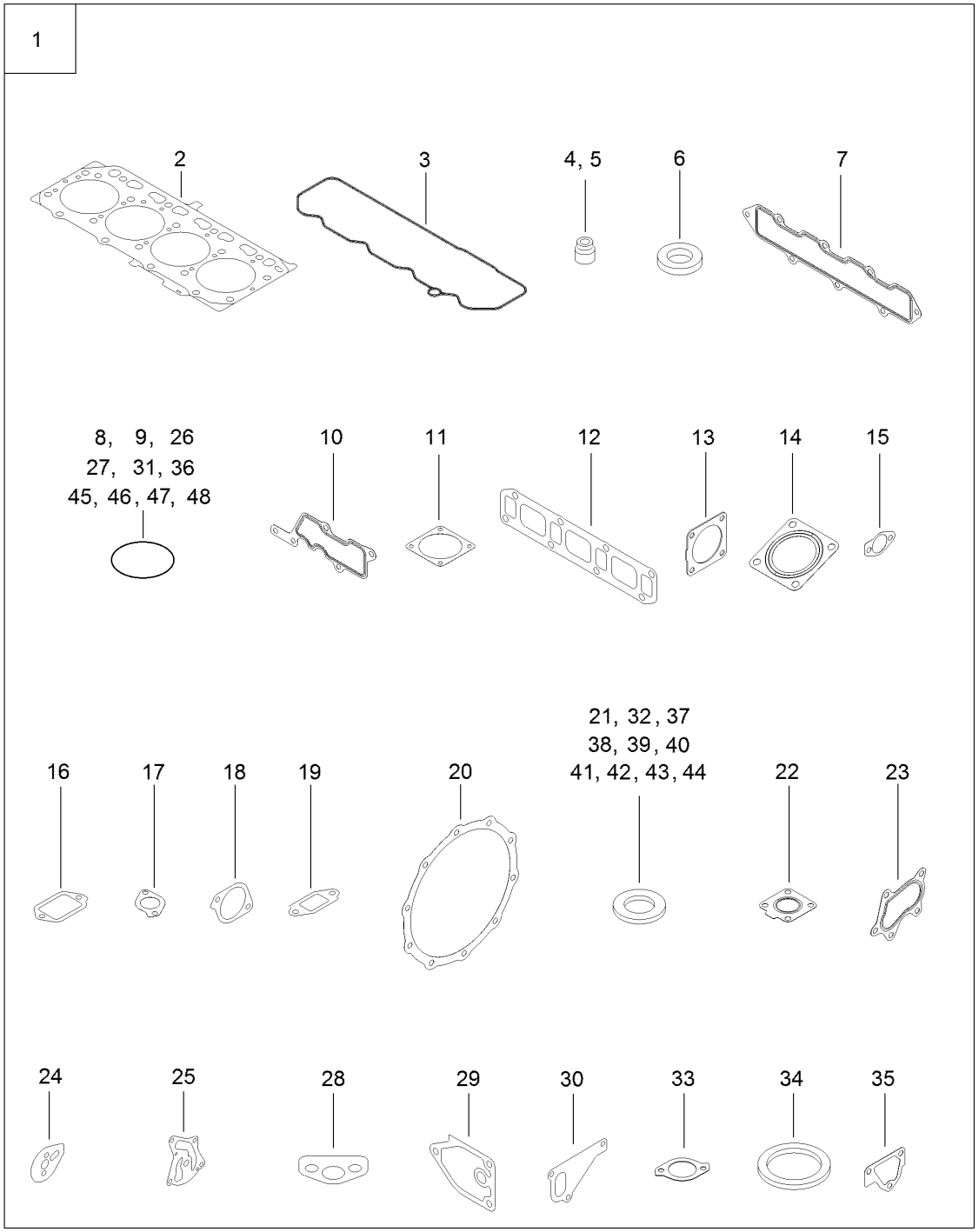
1
2
3
4, 5
6
7
8, 9, 26
27, 31, 36
45, 46, 47, 48
10
11
12
13
14
15
16
17
18
19
20
21, 32, 37
38, 39, 40
41, 42, 43, 44
22
23
24
25
28
29
30
33
34
35

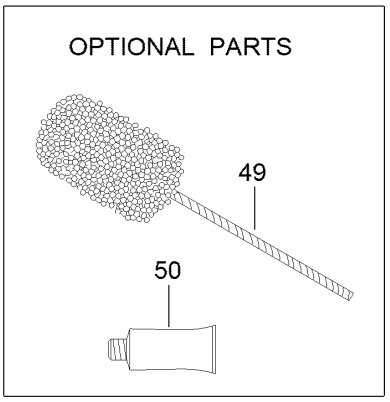
OPTIONAL PARTS
49
50

Gasket Set (continued)

Ref.	Part Number	Qty.	Description
1	127-3189	1	Gasket Kit
2	127-3126	1	Gasket-Head, Cylinder
3	127-3106	1	Gasket-Cover
4	127-2986	4	Seal-Stem, Valve
5	127-3027	4	Seal-Stem, Valve
6	127-3021	4	Gasket-Injector
7	127-3107	1	Gasket-Manifold, Intake
8	127-3032	2	O Ring-Sensor, Pressure
9	127-3033	1	O-Ring
10	127-3034	1	Gasket-Collector
11	127-3037	2	Gasket-Throttle
12	127-3108	1	Gasket-Manifold, Exhaust
13	127-3019	1	Gasket
14	127-2987	1	Gasket-Silencer
15	127-3043	2	Gasket-Cooler, E G R
16	127-3046	1	Gasket-E G R
17	127-3016	1	Gasket
18	127-3050	1	Gasket-Intake Valve, E G R
19	127-3051	1	Gasket-Out Valve, E G R
20	127-3162	2	Gasket-D P F
21	127-3056	4	Gasket-Sensor
22	125-7070	1	Gasket
23	125-7071	1	Gasket
24	127-3069	1	Gasket-Idle, Shaft B
25	127-3004	1	Gasket

Ref.	Part Number	Qty.	Description
26	125-6909	2	O-Ring
27	127-2973	1	O-Ring
28	125-7022	1	Gasket
29	125-7024	1	Gasket
30	125-7047	1	Gasket
31	125-7048	1	O-Ring
32	125-6979	1	Gasket
33	125-7110	1	Gasket
34	125-7026	1	Gasket
35	125-6978	1	Gasket
36	127-3074	1	O-Ring
37	125-7174	1	Washer-Seal
38	125-7175	2	Washer-Seal
39	125-7176	1	Washer-Seal
40	127-3166	2	Washer-Seal
41	125-7177	1	Washer-Seal
42	125-7192	1	Gasket
43	125-7193	2	Gasket
44	127-3174	2	Gasket
45	93-0418	3	O-Ring
46	125-7197	1	O-Ring
47	125-7198	1	O-Ring
48	127-3176	1	O-Ring
49	127-3000	1	Hone
50	125-7248	1	Gasket-Liquid

Attachments and Accessories

For 30636 Groundsmaster 4010 Rotary Mower

Product Name	Model/Part
Bumper Weight Assembly	106-4278-03
Blade-Atomic (21.75in)	107-0214-03
Premium All Season Hydraulic Fluid (55 Gallon Drum)	108-1177
Premium All Season Hydraulic Fluid (5 Gallon Pail)	108-1178
Atomic Blade Service Pack (7 Pack)	108-1450
Blade-Flat Sail (21.75in)	110-6115-03
Flat Blade Service Pack (7 Pack)	110-6130
MVP Blade Kit	117-2722
Backrest Extension Kit	119-7719
Large Seat Cover	120-5179
Castor Wrench	121-3874
Premium Engine Oil 10w30 (55 Gallon Drum)	121-6392
Premium Engine Oil 10w30 (5 Gallon Pail)	121-6393
Premium Engine Oil 15w40 (55 Gallon Drum)	121-6394
Premium Engine Oil 15w40 (5 Gallon Pail)	121-6395
Roller Assembly	132-6113
Pivot Caster Scraper Kit	132-6114
Skid Plate Kit	136-4360
Tire-High Traction (20x10-10)	136-4440
Tire-High Traction (26x12-12)	136-4442
400 Hour MVP Kit	30408
Guardian Recycler Conversion Kit	30420
Leaf Mulcher Kit	30422
CE Kit	30453
Right-Hand Replacement Mower	30476
Left-Hand Replacement Mower	30477
Front Deck	30479
Beacon Kit	30661
License Plate Kit	30664
Light Adapter Kit	30691
4WD Manual Override Kit	31510
Horn Kit	31511
Backup Alarm Kit	31512
4WD Manual Override Kit	31522
Blade (21.75in)	92-5608-03
8in Foam Filled Wheel ASM	93-5974

Notes:

TORO®

Count on it.