FORM NO. 92-8243

TORO®

PART NO. 92-8240

SET-UP AND PARTS CATALOG

ROLLOVER PROTECTION STRUCTURE (ROPS) ADAPTOR KIT FOR USE ON MULTI-PRO™ *

*** This Adaptor Kit has been designed for use on the Multi-Pros listed below:**

MULTI-PRO 1100: Model No. 41101 - Serial No. 20101 & Up
MULTI-PRO 1100: Model No. 41105 - Serial No. 30101 to 30370
MULTI-PRO 418: Stock No. 3258, Series 5223 - Serial No. 10012 & Up

⚠ WARNING

Improper installation of the ROPS Adaptor Kit may result in serious injury or death in the event of a tip over.

All welding on this Adaptor Kit must be done by a certified welder.

⚠ WARNING

An exploding Battery may result in serious injury or death.

Disconnect both Battery Cables before welding on the Multi-Pro Vehicle frame.

IMPORTANT! Before you can install the Adaptor Kit on a Multi-Pro already equipped with a Spray System or a Hydraulic Cargo Bed, you must remove portions of this equipment as follows:

SPRAY SYSTEM: Disconnect the Hoses at the Quick Couplers. Pull the hair pin cotter and remove the Control Cable from the Pump Engagement Lever. Pull the hair pin cotter and remove the clevis pin to free the Pump Pivot Plate and Spray Pump.

HYDRAULIC CARGO BED: Disconnect the Control Rod and electrical wires. Remove Mounting Angles bolted to the cross member under the Vehicle Frame, to remove the Hydraulic Pump and Pump Mount Assembly.

1. Cut off existing Spray Pump mounting lugs and the spring catch. Grind the areas to be flush with Vehicle Frame. See FIG. 1.

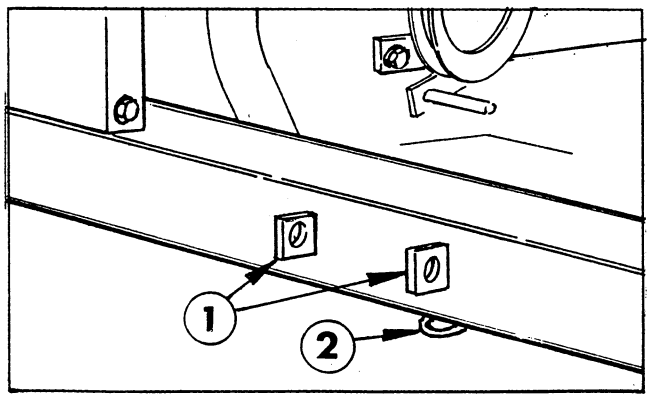

FIG. 1

1. Pump Mounting Lug 2. Spring Catch

Refer to the dimensional drawing on page 3 (FIG. 2) for locations of the new parts to be welded onto the Multi-Pro frame. Proceed as follows:

2. Locate 2 ROPS Mounting Angles (92-3766) flush with outside of frame and 52-1/4" from the front of frame to rear mounting hole as shown in FIG. 2. It may be necessary to grind the existing weld on the frame cross angle in order to locate ROPS mount angles properly. Do not grind frame tube. ROPS mount angles should be clamped in place and prepared for weld.

3. Weld the ROPS mount angles to the main frame using a 1/4" fillet weld all the way around the joint as shown. Grind outside welds flush with outside of frame.

4. Locate 2 ROPS mount lugs (92-3767) flush with outside of frame and 52-1/4" from front of machine frame to the center of hole. Hole center should be directly above rear hole on ROPS mount angle. Clamp lugs and prepare for weld.

5. Weld the ROPS mount lugs to the main frame using a 1/4" fillet weld all the way around the joint. Grind outside welds flush with outside of frame.

6. Layout locations for four holes in the front frame cross tube as shown in FIG. 2 and drill 17/32" dia. through one wall only.

©The Toro Company-1994

7. Install ROPS as per "ROPS SET-UP INSTRUCTIONS". See Form No. 92-3889.

8. Align the pivot tubes on the new Pump Pivot Plate with those on the ROPS Bar mounting plate. Insert the two clevis pins and secure with the hair pin cotters. See FIG. 3.

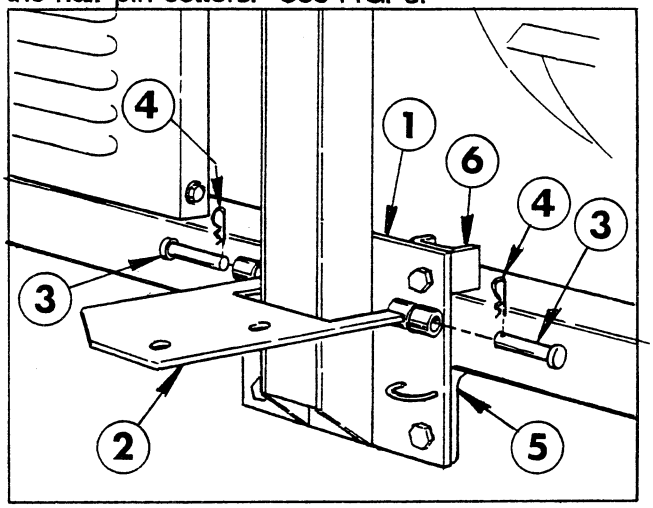

FIG. 3

1. Rear ROPS Bar (L.H.)
2. Spray Pump Pivot Plate
3. Clevis Pin
4. Hair Pin Cotters
5. ROPS Mounting Angle
6. ROPS Mounting Lug

9. Remove the Spray Pump, Spring Angle and Spring from the original Pump Pivot Plate.

10. Install the Spray Pump and Spring Angle to the new Pump Pivot Plate using fasteners previously removed. See FIG. 4.

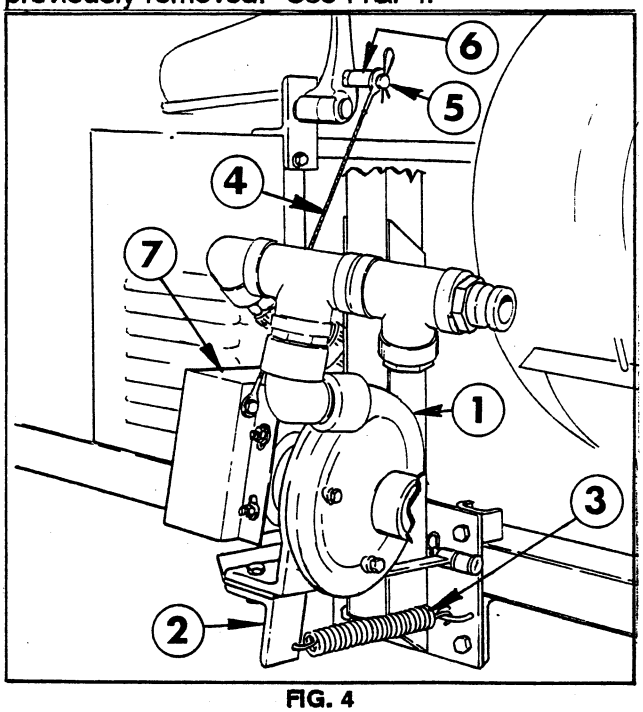

FIG. 4

1. Spray Pump
2. Spring Angle
3. Spring
4. Pump Control Cable
5. Handle Pin
6. Spacer
7. Pump Belt Cover

11. Pull the hairpin cotter and disconnect the Control Cable at the Control Handle. Remove Handle Pin and Spacer. Replace with the new Handle Pin and Spacer provided. Reconnect the Control Cable and secure with hairpin cotter as shown.

12. Disconnect the Control Cable from the Pump Belt Cover and install it to the **pump** side of the Cover, using the lock nut and screw previously removed.

13. Connect the Spring between the Spring Angle and the Spring Catch on the ROPS Bar mounting plate.

14. Re-install the Drive Belt. Check the alignment of the Pump's Pulley with Engine Drive Pulley, using a straight edge. Adjust, if necessary, by loosening and re-positioning the Drive Pulley.

15. Engage the Pump Engagement Lever...DO NOT START THE ENGINE. Adjust the Belt Guides to obtain 1/8" clearance between the inside of the Guides and the Belt.

16. Loosen the two nuts which secure the Belt Cover to the Clamp on the Pump Shaft. Slide the Belt Cover forward, so that the Cover clears the ROPS Bar by approximately 1/4 inch.

17. Rotate the Belt Cover around the Pump Shaft until the tension on the Pump Control Cable requires a small amount of pressure to snap the Pump Engagement Lever "over-center" to disengage the Pump drive. Make sure there is 1/8" clearance between the Belt and the inside of the Belt Cover. Tighten the lock nuts after adjustment is complete.

If step 17 does not achieve the necessary tension on the Control Cable, loosen the Pump mounting bolts and slide the Pump on the Pivot Plate, to move it away from the Vehicle frame, increasing the Cable tension.

18. Paint all surfaces left unprotected by welding and sanding with a satin black paint.

19. Reconnect hoses at the quick couplers.

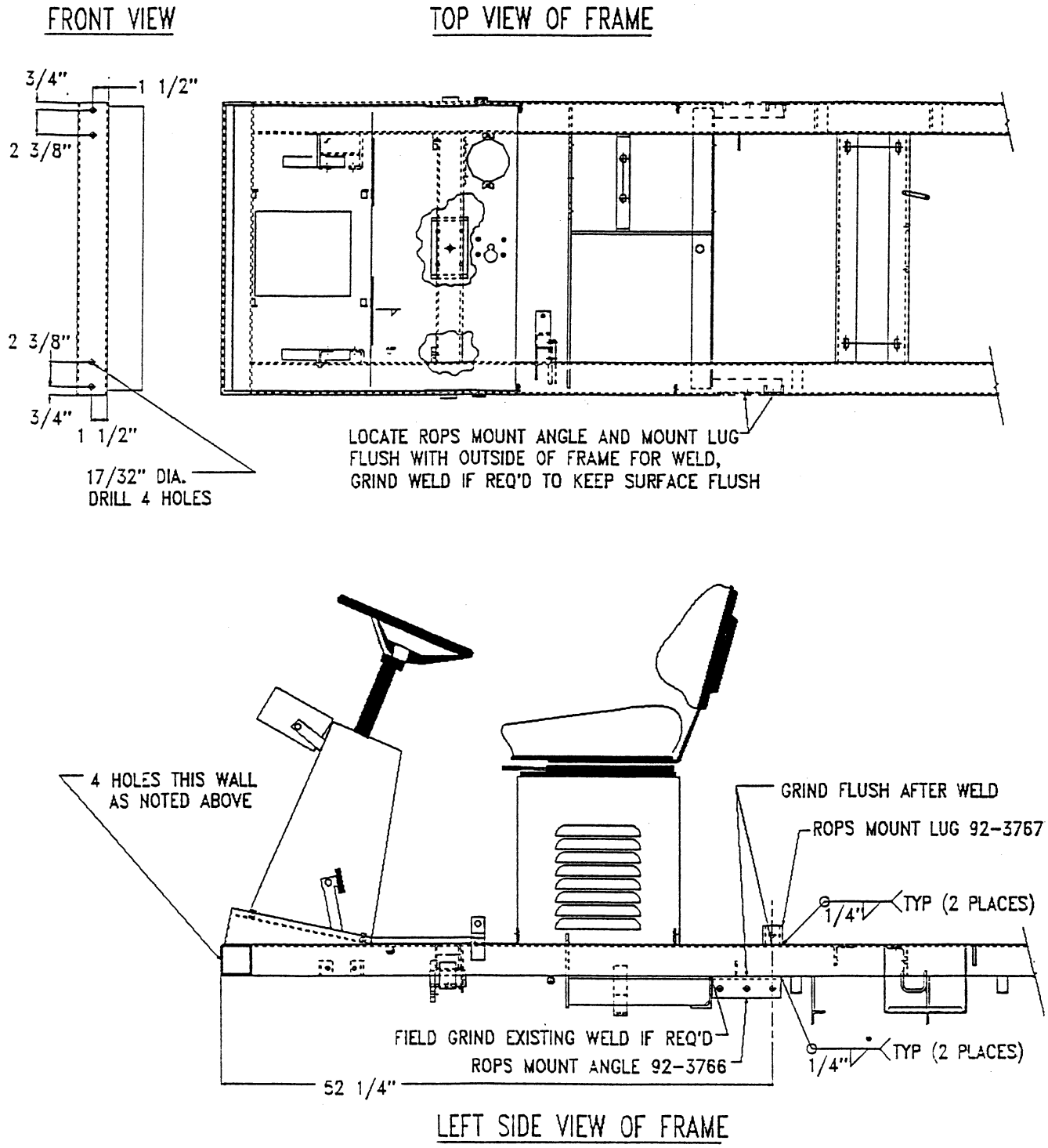
FRONT VIEW
TOP VIEW OF FRAME
3/4"
1 1/2"
2 3/8"
2 3/8"
3/4"
1 1/2"
17/32" DIA.
DRILL 4 HOLES
LOCATE ROPS MOUNT ANGLE AND MOUNT LUG
FLUSH WITH OUTSIDE OF FRAME FOR WELD,
GRIND WELD IF REQ'D TO KEEP SURFACE FLUSH
4 HOLES THIS WALL
AS NOTED ABOVE
GRIND FLUSH AFTER WELD
ROPS MOUNT LUG 92-3767
1/4"
TYP (2 PLACES)
FIELD GRIND EXISTING WELD IF REQ'D
ROPS MOUNT ANGLE 92-3766
1/4"
TYP (2 PLACES)
52 1/4"
LEFT SIDE VIEW OF FRAME

FIGURE 2

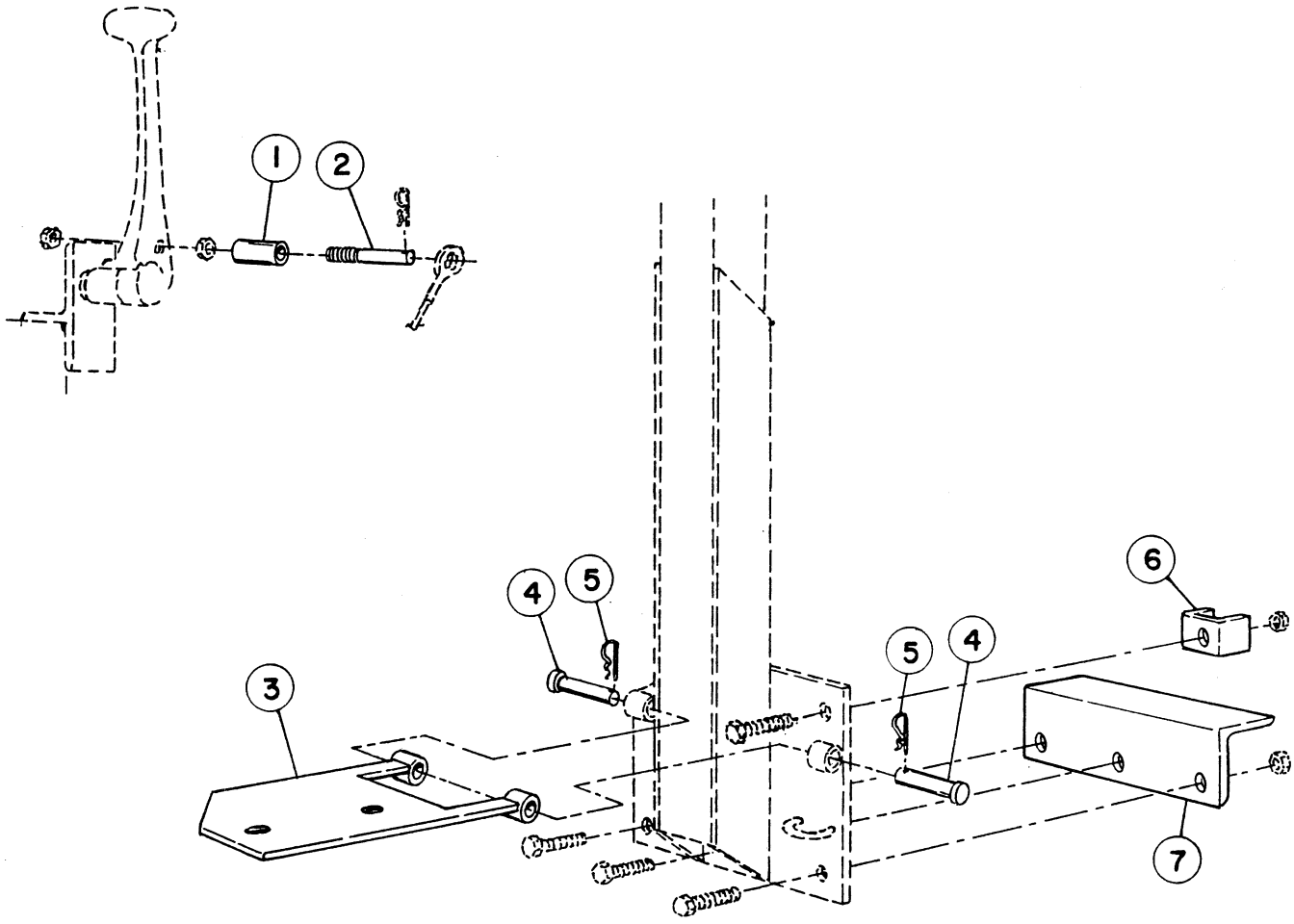

ROPS ADAPTOR KIT (92–8240)

Ref	Part No.	Description	Qty
1	92–3835	Spacer, 3/8 I.D. x 3–1/2	1
2	92–3834	Handle Pin	1
3	92–3771	Pump Pivot Plate	1
4	42195	Clevis Pin	2

Ref	Part No.	Description	Qty
5	328967	Hair Pin Cotter	2
6	92–3767	ROPS Mounting Lug	2
7	92–3766	ROPS Mounting Angle	2