FORM NO. 93-0641

TORO

MODEL NO. 41190-40001 & UP
MODEL NO. 41128-40001 & UP
MODEL NO. 41020-40001 & UP
MODEL NO. 41021-40001 & UP

INSTALLATION INSTRUCTIONS/ PARTS MANUAL

INJECTOR-PRO SYSTEM
FOR THE MULTI-PRO 1100

The following instructions apply to the installation of a **single** InJector Pro System. If the optional dual System is to be installed, refer to the Set-Up Instructions included with the InJector Pro Pump (Model No. 41191) and the InJector Pro Tank (Model No. 41192).

NOTE: "Right", "Left", "Front" and "Rear" are referenced while seated in the operator's position.

ALTERNATOR:

1. Remove the eight washer hd. cap screws and remove the right hand Seat Support Panel. Tip the Operator Seat forward for easier access to the engine compartment.

2. Disconnect the red wire on the engine's regulator/rectifier from the black wire as shown in FIG. 1. Cap the wires with mating plugs furnished and seal with silicone.

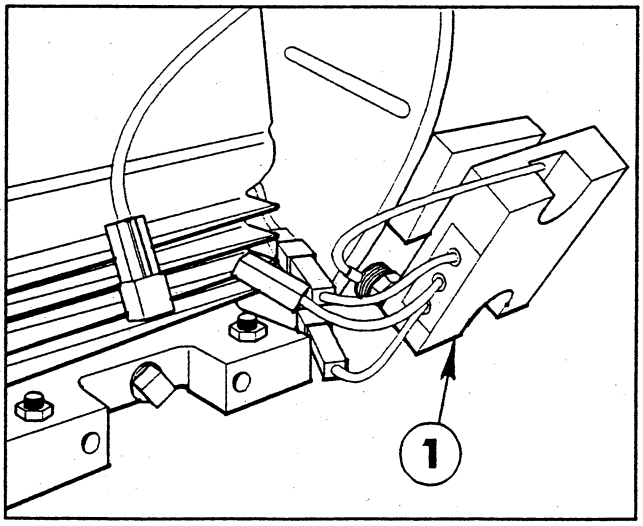

FIG. 1

1. Regulator/Rectifier

3. Remove four (4) nuts and lock washers holding the Transmission to the Vehicle Frame (and the Belt Guide to the Transmission). See FIG. 2.

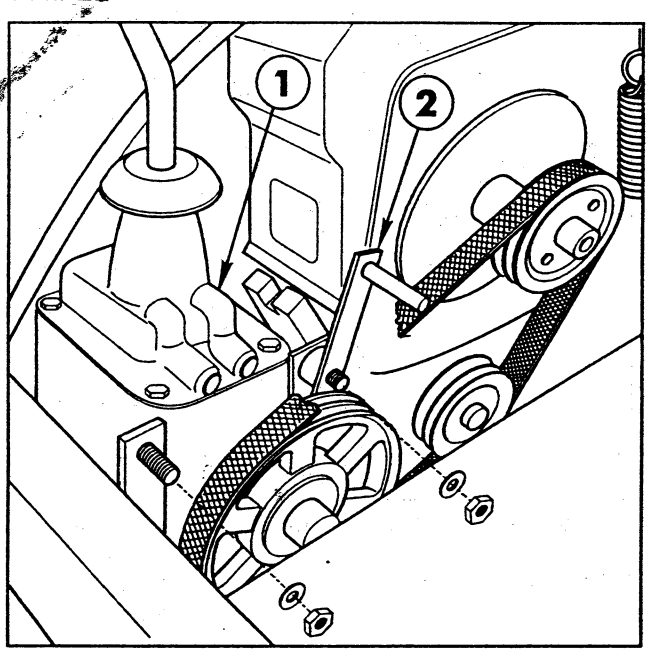

FIG. 2

1. Transmission 2. Belt Guide

4. Set the two Belt Guides aside for later installation.

NOTE: If the rod on the longer of the two Belt Guides measures 2-1/4" in length, it will have to be shortened to 1-7/8".

5. Attach the longest Alternator Mounting Strap to the Transmission's inner mounting screws as shown in FIG. 3. Reattach the Belt Guide and secure with lock washers and hex nuts removed in Step 3.

The Toro Company©-1994
All Rights Reserved

ALTERNATOR (con't.)

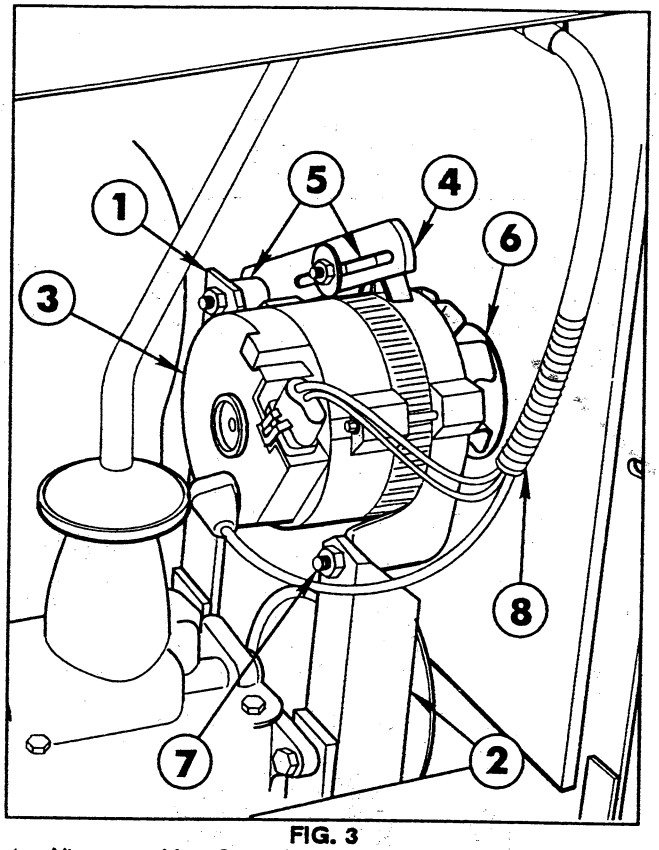

FIG. 3

1. Alternator Mtg. Strap (long)
2. Alternator Mtg. Strap (short)
3. Alternator
4. Adjustment Strap
5. Spacer
6. Alternator Pulley
7. Pivot Bolt
8. Alternator Wiring Harness

6. Attach the shorter Mounting Strap to the Transmission's outer mounting screws. Reattach the Belt Guide and secure with lock washers and hex nuts removed in Step 3.

IMPORTANT: When assembling the Alternator to the Mounting Straps and the Adjustment Strap as directed in Steps 7, 8, ad 9, **do not tighten** the fasteners until the Alternator Belt adjustment is complete.

7. Insert the 3/8" x 1-1/2" screw through the hole in the Adjustment Strap. Slide a Spacer onto the screw and mount the Adjustment Strap to the inner Mounting Strap, using a lock washer and hex nut.

8. Mount the Alternator to the outer Mounting Strap, using the 3/8" x 2-3/4" cap screw, lock washer and hex nut.

9. Insert the 5/16" x 2" cap screw through the hole in the Alternator and slide a Spacer onto the screw. Push the screw through the slot in the Adjustment Strap, add the large flat washer and hex nut.

10. Install the Alternator Belt in the "open" groove in the Engine Pulley and loop it over the Alternator Pulley.

11. Pivot the Alternator to tighten the Belt. Belt tension is correct when it can be deflected 3/8" by a 22 lb. force applied mid-span of the Pulleys.

12. When Belt tension is correct, tighten the pivot bolt first (to hold the Alternator in place) then the fasteners on each end of the Adjustment Strap.

13. Install the Alternator Wiring Harness to the Alternator as shown in FIG. 3. Insert the plug end into the socket in the Alternator.

14. Attach the ring terminal to the Alternator and press the protective rubber boot over the connection until it engages and is held in place by the ring around the terminal.

15. Route the Wiring Harness across the top of the Seat Support, above the Fuse Box and down through the hole in the floor board. Secure the Harness to the Fuse Box with plastic ties furnished.

NOTE: Refer to the Electrical Schematic on page 3 as an aid to identifying and connecting the Wiring Harness of the InJector-Pro System.

CONSOLE COMPUTER:

1. Remove the knock-out plug in the front of the Steering Console and insert the large grommet. See FIG. 4.

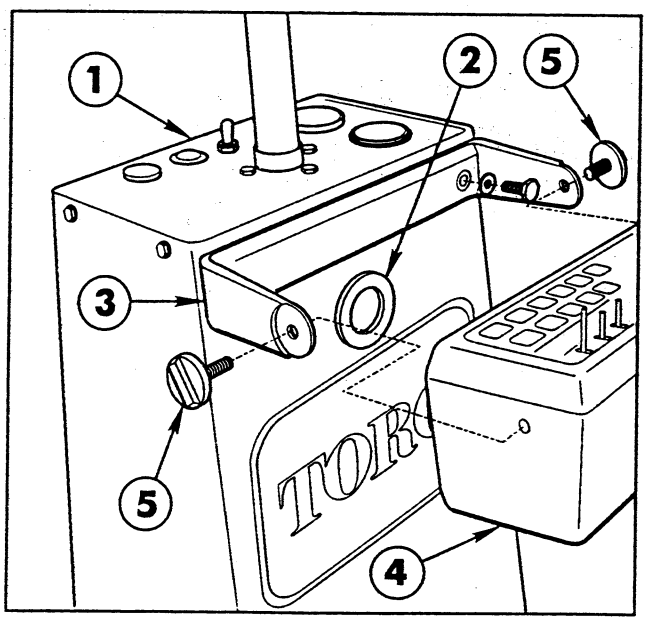

FIG. 4

1. Steering Console
2. Grommet
3. Mounting Bracket
4. Console Computer
5. Mounting Knobs

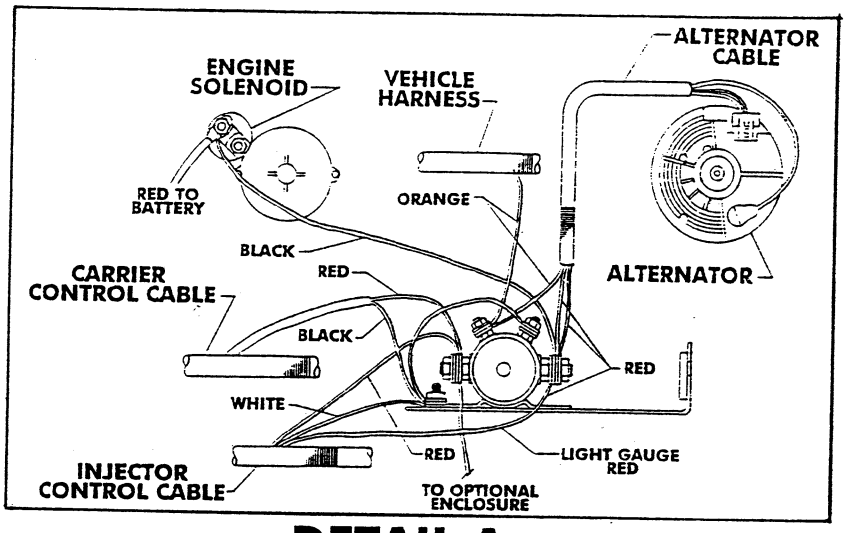

DETAIL A

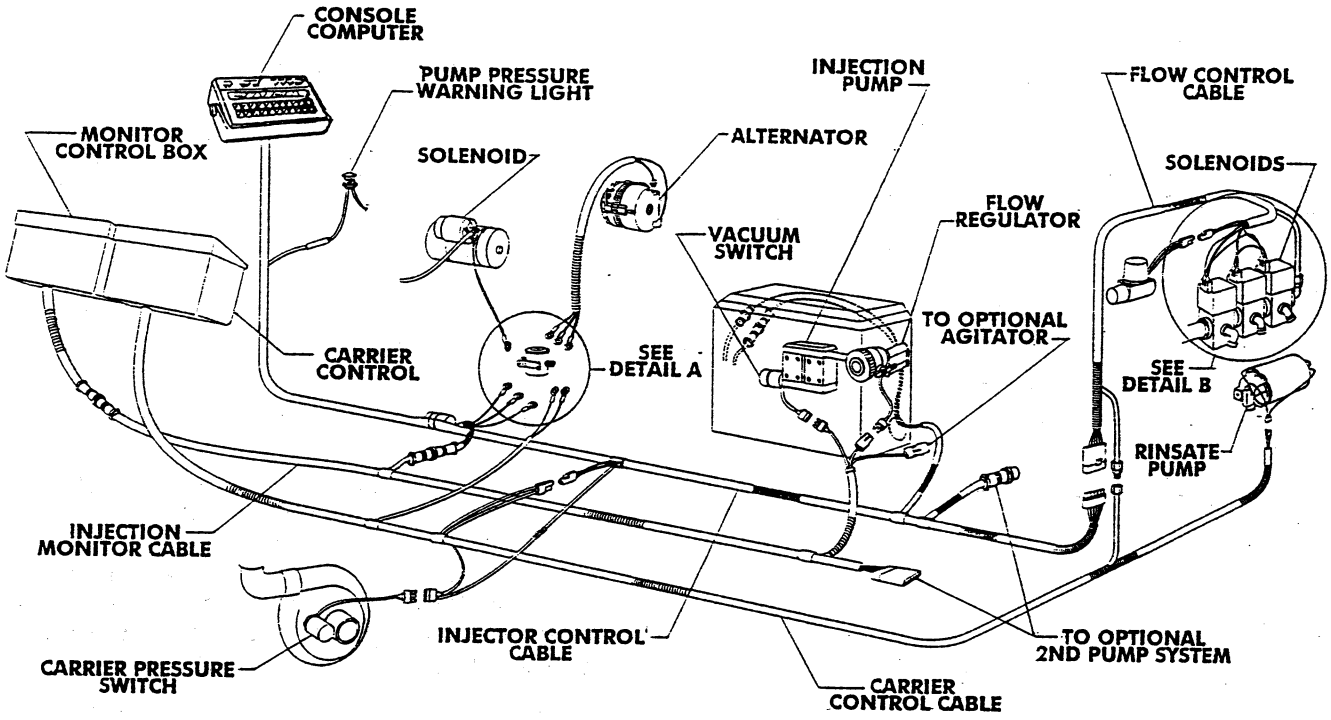

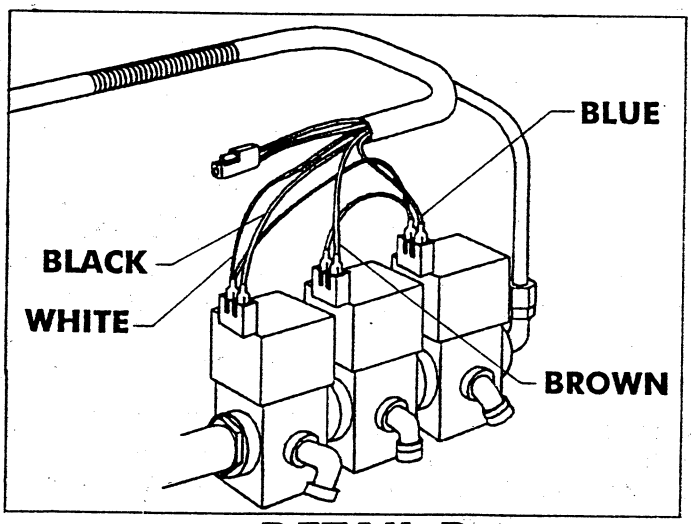

DETAIL B

CONSOLE COMPUTER (con't.)

2. Remove the "U"-shaped Mounting Bracket from the Console Computer and secure the Mounting Bracket to the Steering Console with two (2) 1/4" x 1" washer hd. screws and flat washers, as shown in FIG. 4.

3. Reinstall the Console Computer within the Bracket and secure with the two (2) Mounting Knobs.

SPEED SENSOR:

1. Mount the four (4) Wheel Magnets to the inside rim of the Vehicle's left rear wheel with eight (8) hex nuts and four (4) lock washers as shown in FIG. 5. **IMPORTANT!** Magnets must be mounted in alternating red-black sequence.

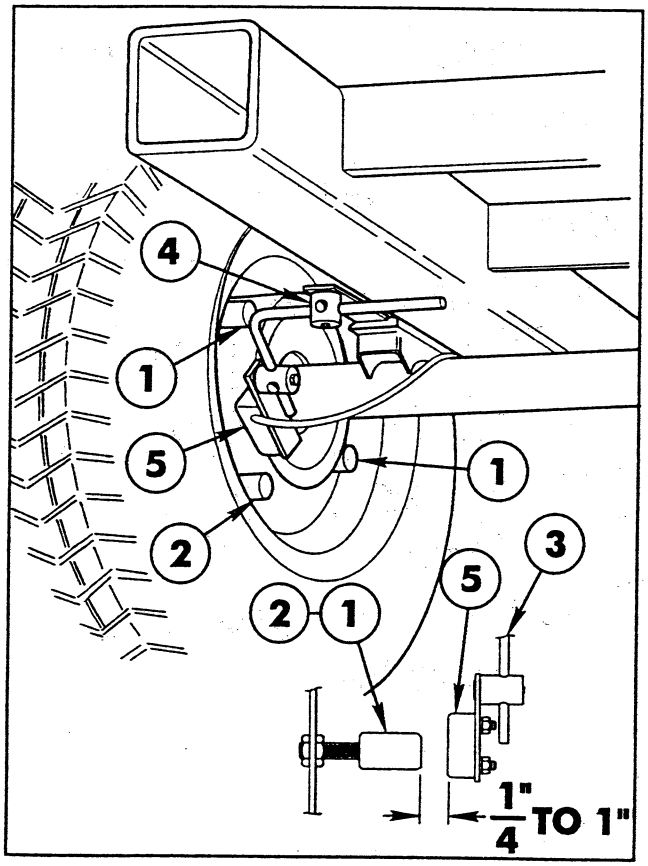

FIG. 5

1. Wheel Magnet (RED)
2. Wheel Magnet (BLACK)
3. Sensor Rod
4. Turret Assembly
5. Sensor Switch
6. Speed Sensor Cable

2. Insert the longest leg of the Sensor Rod into the hole in one of the Turret Assemblies. Tighten the flat head screw holding the Turret to the Strap.

3. Mount the Turret Assembly to the bottom of the Angle welded to the Vehicle Frame (behind the angle holding the Rear Axle Mount) using two (2) 1/4" x 1" cap screws, lock washers and hex nuts.

4. Assemble the Sensor Switch to the other Turret Assembly with the two (2) 1/4" lock washers and hex nuts.

5. Insert the shorter leg of the Sensor Rod into the Turret Assembly so that the Sensor Switch is parallel with the Sensor Rod as shown.

6. Position the Sensor Switch on the Sensor Rod so that as the Wheel rotates, the Magnets pass across the center of the black molded Switch Assembly.

7. Adjust the position of the longer leg within the Turret Assembly until there is a clearance gap of 1/4" to 1" between the Switch Assembly and the Wheel Magnets.

8. Rotate the Wheel and make sure the clearance gap is correct between each of the four Wheel Magnets. When adjustment is correct, secure the Turrets to the Sensor Rod by tightening the square hd. set screws.

9. Route the Speed Sensor Cable over the Vehicle's Rear Axle, along the left hand side of the Frame, and through the hole in the floor board to the inside of the Steering Console.

10. Bring the Cable up and through the grommeted hole in the Steering Console and plug it into the rear of the Console Computer.

INJECTION CONTROL WIRING HARNESS:

1. Route the single plug and approximately five (5) feet of Wiring Harness (in front of the 3 inch branch of Harness) through the hole in the Vehicle's cross member as shown in FIG. 6. Route the Harness forward and up over the leaf springs and through the hole in the floor board to the inside of the Steering Console.

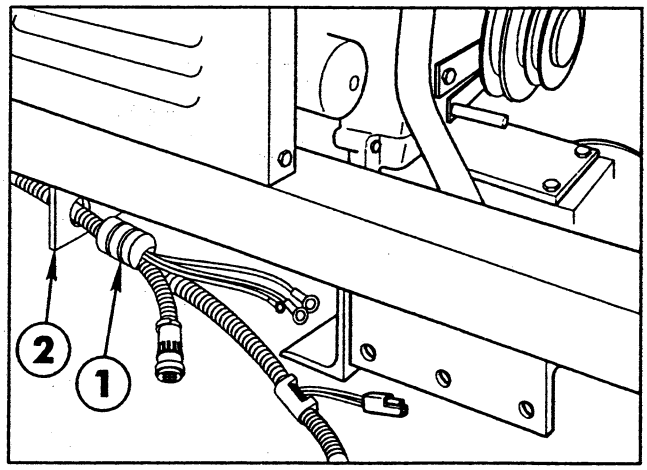

FIG. 6

1. Injection Control Wiring Harness
2. Cross Member

INJECTION CONTROL WIRING HARNESS (con't.)

2. Bring the Wiring Harness up and through the grommeted hole in the Steering Console and plug it into the rear of the Console Computer.

3. Route the other end of the Wiring Harness over the top of the Vehicle's cross angle, between the Engine's Heat Shield and the Vehicle Frame, and through the three "U"-shaped brackets under the Vehicle Frame.

MONITOR CONTROL BOX:

1. Remove the "U"-shaped Mounting Bracket from the Monitor Control Box and drill two (2) 9/32" dia. holes in the Mounting Bracket as shown in FIG. 7.

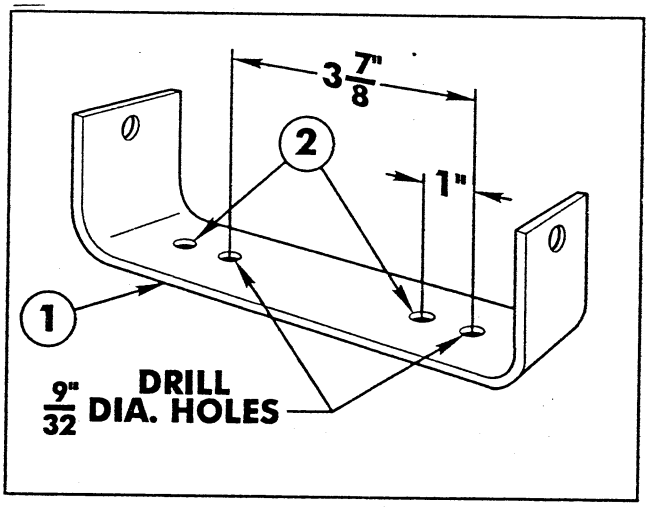

FIG. 7

1. Mounting Bracket 2. Existing Holes

2. Align the new holes with the holes in the Seat Support and secure the Bracket to the Seat Support with two (2) 1/4" x 5/8" washer hd. cap screws.

3. Reinstall the Monitor Control Box within the Mounting Bracket and secure with the two (2) 1/4" x 3/4" socket hd. cap screws removed previously. See FIG. 8.

CARRIER CONTROL BOX:

1. Remove the "U"-shaped Mounting Bracket from the Carrier Control Box.

2. Using the Mounting Bracket as a template, locate, mark and drill two (2) 9/32" dia. holes in the Seat Support as shown in FIG. 8.

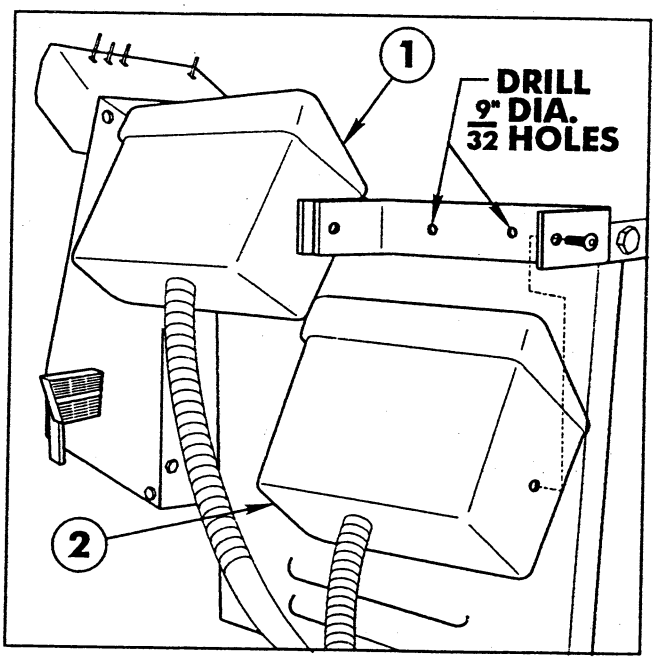

FIG. 8

1. Monitor Control Box 2. Carrier Control Box

3. Replace the Bracket on the Control Box and secure with two (2) 1/4" x 3/4" socket hd. cap screws previously removed.

4. Secure the assembled Carrier Control Box and Bracket to the Seat Support with two (2) 1/4" x 5/8" washer hd. cap screws and lock nuts.

RELAY:

1. Assemble the Relay to the Relay Mounting Bracket with the two (2) 1/4" x 5/8" washer hd. self-tap screws, lock washers and hex nut as shown in FIG. 9.

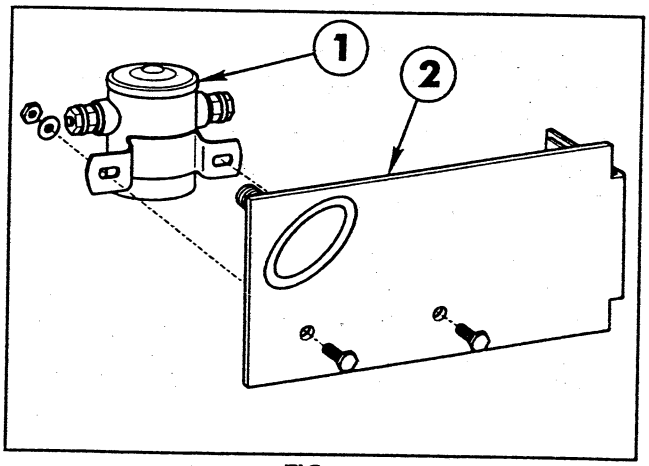

FIG. 9

1. Relay 2. Relay Mounting Bracket

RELAY (con't.)

2. Connect the three Wiring Harnesses and the Engine Starter Solenoid wire to the Relay as shown in DETAIL A of the Electrical Schematic on Page 3.

IMPORTANT! If your Vehicle is equipped with the optional Operator Enclosure, install the wire for the Enclosure Fan on the Relay terminal as shown. This will insure that the Fan stops running when the Ignition Key is turned OFF.

3. Mount the assembled Relay and Relay Bracket to the Vehicle cross angle as shown in FIG. 10 with two (2) 5/16" x 1" cap screws and lock washers.

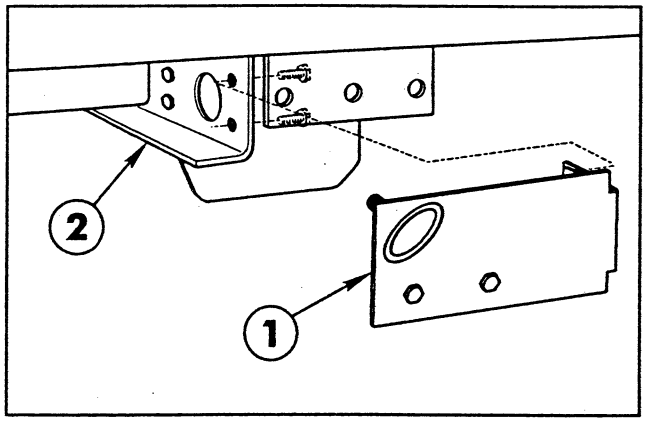

FIG. 10

1. Relay and Mounting Bracket Assembly
2. Cross Angle

MONITOR CONTROL WIRING HARNESS:

1. Push the end of the Monitor Control Wiring Harness with the single plug and short (3") branch and plug, through the ring on the Relay Mounting Bracket.

2. Connect the single plug to the Cable from the Monitor Control Box, as shown in FIG. 11.

3. Connect the plug on the end of the 3" branch to the mating plug on the Injection Control Wiring Harness.

4. Route the other end of the Harness over the top of the Vehicle's cross angle, between the Engine's Heat Shield and the Vehicle Frame, then through the three "U"-shaped brackets under the Vehicle Frame to the rear of the Vehicle.

CARRIER CONTROL WIRING HARNESS:

1. Route the Carrier Control Wiring Harness through the ring on the Relay Mounting Bracket as shown in FIG. 11.

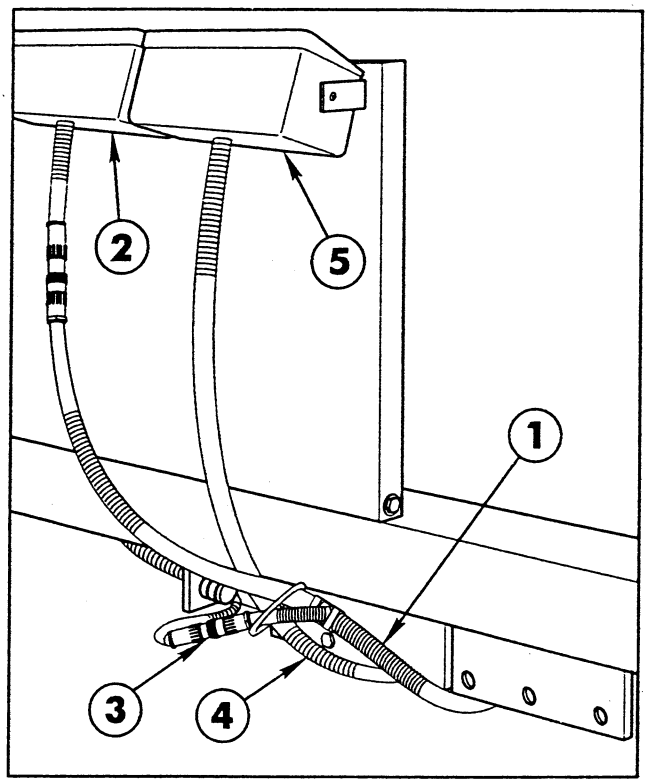

FIG. 11

1. Monitor Control Wiring Harness
2. Monitor Control Box
3. Injection Control Wiring Harness
4. Carrier Control Wiring Harness
5. Carrier Control Box

2. Connect the plug on the Carrier Control Wiring Harness to the mating plug on the Injection Control Wiring Harness. (See Electrical Schematic on page 3.)

3. Route the Carrier Control Wiring Harness, through the "U" shaped brackets under the Vehicle frame, to the rear of the Vehicle.

CENTRIFUGAL PUMP:

IMPORTANT! If the optional Rollover Protection Structure (ROPS) is to be installed on the Vehicle, it must be installed **prior** to installing the Centrifugal Pump. See the Installation Instructions furnished with the ROPS (model no. 41185); or the ROPS Adaptor Kit (part no. 92-8240). If the Multi-Pro Vehicle's Serial no. is between 20101 and 30370, disregard Step 1 in the following instructions.

1. Mount the Pivot Mounting Plate to the angle on the bottom of the Vehicle Frame, using two 1/2" x 1-1/4" cap screws and lock nuts. See FIG. 12.

2. Align the pivot tubes on the Pump Pivot Plate with those on the Pivot Mounting Plate. Insert the two (2) clevis pins and secure with two (2) hairpin cotters.

CENTRIFUGAL PUMP (con't.)

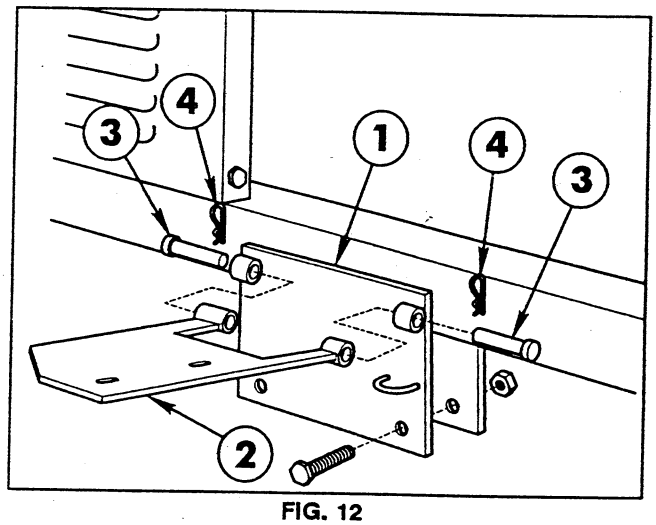

FIG. 12

1. Pivot Mounting Plate
2. Pump Pivot Plate
3. Clevis Pin
4. Hair Pin Cotter

NOTE: In the following instructions, "sealer" refers to RTV clear silicone.

3. Secure the Centrifugal Pump in a vise. Apply thread sealer and install the fittings to connect the Suction, Supply, Agitator and Rinse/Hand Gun Hoses to the Pump as shown in FIG. 14.

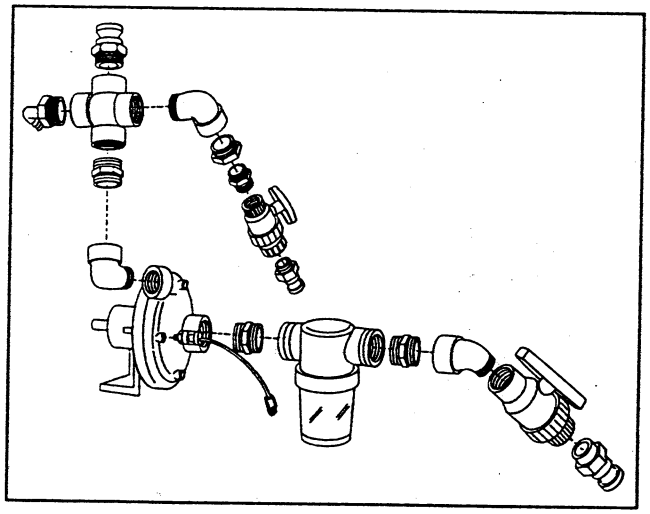

FIG. 13

4. Remove the pipe plug from the Centrifugal Pump, apply thread sealer and install the Pressure Switch into the Pump as shown. Cover with protective rubber boot.

5. Assemble the Centrifugal Pump and the Spring Mounting Angle to the Pump Pivot Plate, using two (2) 3/8" x 1-1/2" cap screws, flat washers and lock nuts as shown in FIG. 14.

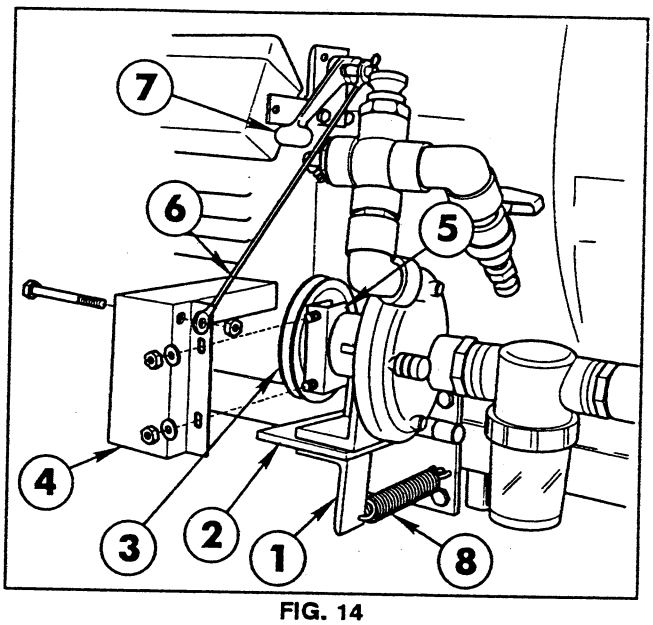

FIG. 14

1. Spring Mounting Angle
2. Pump Pivot Plate
3. Pump Pulley
4. Pump Belt Cover
5. Pump Cover Clamp
6. Pump Cable
7. Accessory Control Lever
8. Pump Spring

6. Using a straight edge as a guide, position the Pump Pulley so that it is in alignment with the Engine's Drive Pulley. When alignment is correct, tighten the two (2) set screws in the Pump Pulley.

7. Install the Pump Drive Belt around the Pump Pulley and Engine drive Pulley.

8. Loosely mount the Pump Belt Cover to the Pump hub with the Pump Cover Clamp and the two (2) 3/8" flat washers and lock nuts.

9. Insert the 3/8" x 4" cap screw into the hole in the Pump Cable's end fitting and through the Pump Cover. Secure the Cable to the Cover with a 3/8" lock nut.

10. Remove the hair pin cotter and flat washer from the pin in the Accessory Control Lever. Push the Control Lever down (disengaged). Slide the unattached end of the Cable onto the pin and secure with the flat washer and hair pin cotter previously removed.

11. Connect one end of the Pump Spring to the ring on the Pump Pivot Plate and the other end through the hole in the Spring Mounting Angle.

12. Engage the Accessory Control Lever...DO NOT START THE ENGINE! Adjust the Belt Guide to obtain 1/8" clearance between the inside of the Guide and the Belt.

CENTRIFUGAL PUMP (con't.)

13. Rotate the Belt Cover around the Pump hub until the tension on the Pump Control Cable requires a small amount of pressure to snap the Control Lever "over-center" to disengage the Pump drive. Make sure there is 1/8" clearance between the Belt and the inside of the Belt Cover. Tighten the lock nuts after adjustment is complete.

If Step 13 does not achieve the necessary tension on the Control Cable, loosen the Pump mounting bolts and slide the Pump on the Pivot Plate to move it away from the Vehicle Frame, increasing the Cable tension.

14. Connect the plug on the wire from the Pressure Switch to the mating plug from the Carrier Control Wiring Harness.

NOTE: The remaining Wiring Harness connections will be made after the Tank and Saddle and the Boom Frame are installed on the Vehicle.

CARRIER TANK AND SADDLE:

1. Attach the 1" x 21" Suction Hose to the barbed elbow in the bottom of the Tank with a hose clamp. Attach the female quick coupler to the other end of the Suction Hose and secure with a hose clamp. See Plumbing Schematic on page 12.

2. Attach the 1/2" x 42" Agitator Hose to the barbed elbow in the bottom of the Tank with a hose clamp. Attach the female quick coupler to the other end of the Agitator Hose and secure with a hose clamp.

3. Place the Tank and Saddle Assembly on the Vehicle Frame.

4. Slide the Tank and Saddle forward, to hook the two lugs on the front Saddle under the Vehicle's cross member, resting the angle under the rear Saddle over the Vehicle's rear cross member.

5. Secure the rear Saddle Angle to the Vehicle's cross member with two (2) 1/2" x 1-1/2" cap screws, flat washers, lock washers and hex nuts. See FIG. 15.

6. Mount the Rinseate Pump to the rear Saddle, using four (4) #10 x 1-1/4" machine screws, eight (8) flat washers and four (4) lock nuts.

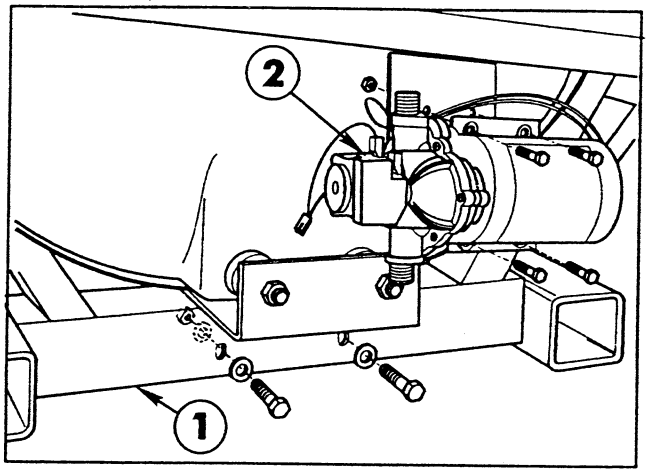

FIG. 15

1. Saddle Angle (rear)
2. Rinseate Pump

7. Loosen the screw and remove the cover plate on the back of the Injection Pump Housing. See FIG. 16.

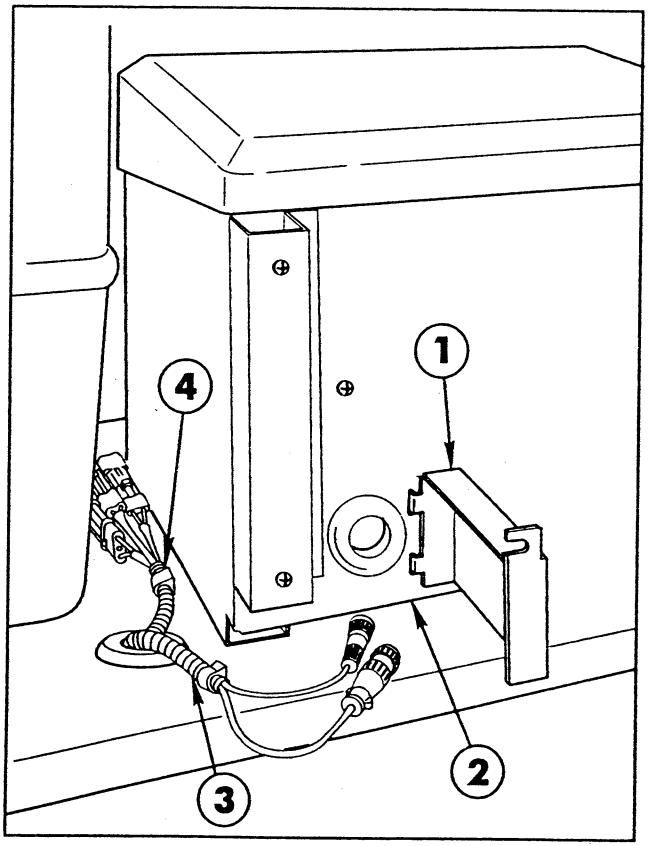

FIG. 16

1. Cover Plate
2. Injection Pump Housing
3. Injector Control Wiring Harness
4. Monitor Control Cable

8. Route the two cables from the Injector Control Wiring Harness through the grommeted hole in the Saddle Shelf and the hole in the Pump Housing, to connect with the mating connectors inside the Pump Housing.

9. Replace the Cover and tighten the screw.

10. Connect the two cables from the Monitor Control Cable to the connectors from the Vacuum Switch and the Flow Regulator. See FIG. 17.

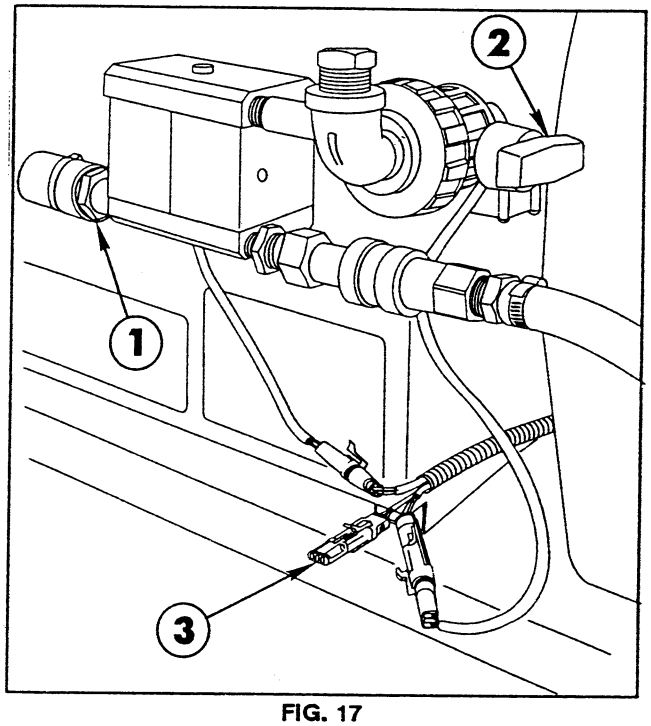

FIG. 17

1. Vacuum Switch
2. Flow Regulator
3. Optional Agitator Connector

BOOM FRAME ASSEMBLY:

1. Cut off the "stop" keys welded on the tubes of each of the two Boom Mount Assemblies. Grind the areas to be flush with the tube surface.

2. Apply a heavy coating of grease to the tubes of the two Boom Mount Assemblies and insert them into the Vehicle Frame as shown in FIG. 18.

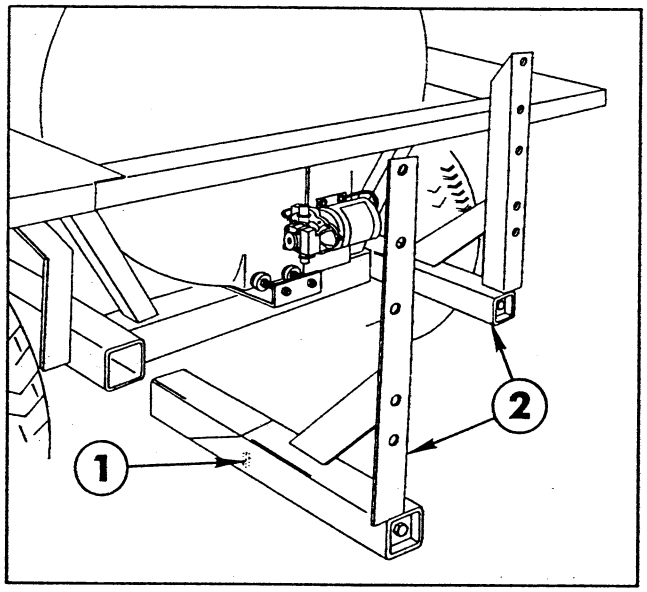

FIG. 18

1. Stop Key
2. Boom Mount Assy.

3. Using a torque wrench, tighten the 1/2" x 18" screws that join the Wedges to the Boom Mounts. Tighten to 50 ft. lbs.

4. Install the two (2) Boom Hold-In Assemblies and the Manifold Mounting Strap to the top of the Boom Mount uprights as shown in FIG. 19, using four (4) 1/2" x 1-1/4" cap screws, flat washers and hex nuts.

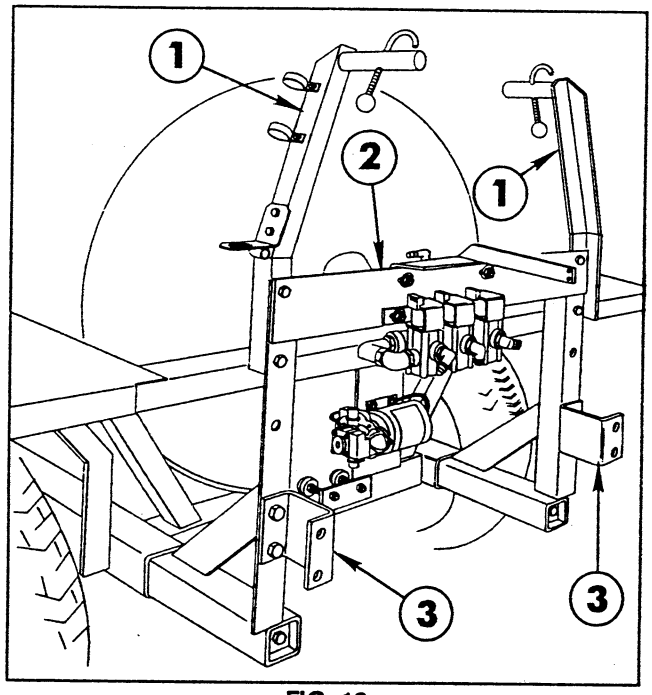

FIG. 19

1. Boom Hold-In Assem.
2. Manifold Mounting Strap
3. Boom Mounting Bracket

5. Attach the two "U"-shaped Boom Mounting Brackets to the bottom of the Boom Mount uprights with four (4) 1/2" x 1-1/4" cap screws, and lock nuts.

6. Position a Spacer Tube between the lugs on each side of the Main Frame tube. Insert a 1/2" x 2-1/2" cap screw through the lugs and spacers. Secure the Main Frame to the Boom Mounting Brackets with lock nuts. See FIG. 20.

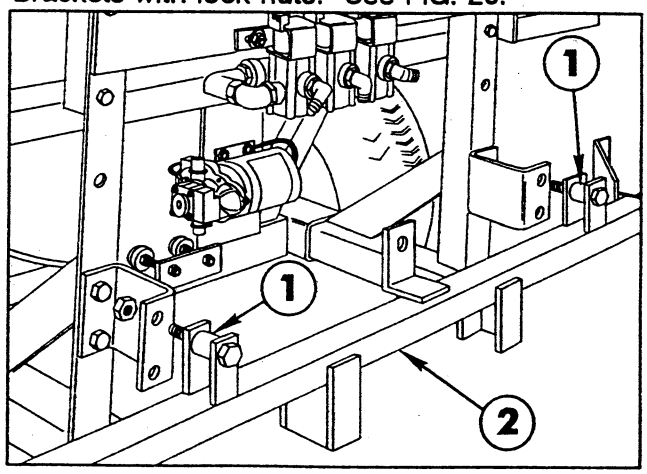

FIG. 20

1. Spacer
2. Main Frame

7. Position the two (2) Center Boom angles on the Main Frame and secure them to the Main Frame tube with two (2) square U-bolts, four (4) flat washers and hex nuts. See FIG. 21.

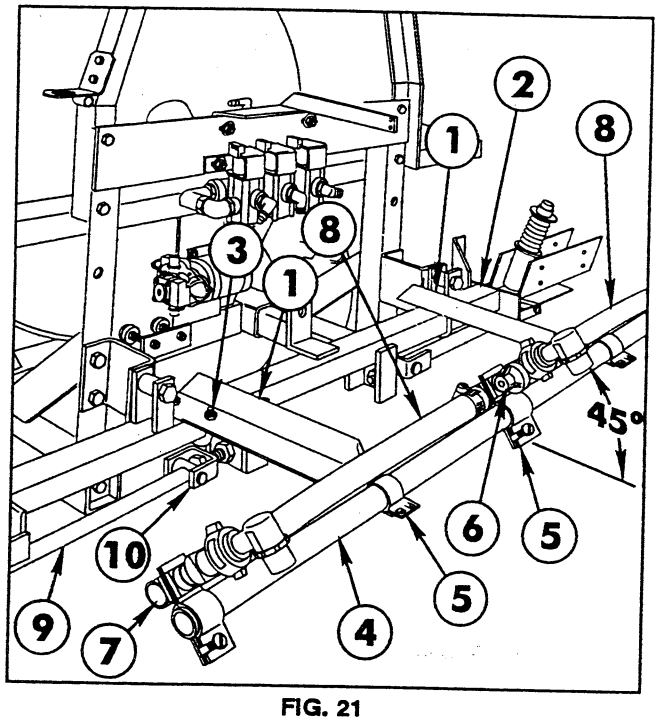

FIG. 21

1. Center Boom Angle
2. Main Frame
3. U-Bolt
4. Center Boom Pipe
5. Boom Clamp
6. Triple Barb Nozzle
7. Single Barb Nozzle
8. Jumper Hose
9. Strut Assembly
10. Adjustable Clevis

8. Center and attach the Center Boom Pipe to the two Center Boom Angles with two (2) clamps, 3/8" x 1" cap screws, flat washers and lock nuts.

9. Loosely attach the triple barb Nozzle Assembly in the approximate center of the Center Boom Pipe. For the most uniform spray coverage, position all Nozzle Assemblies at a 45° angle as shown in FIG. 21. Tighten clamp screw to secure the Nozzle to the Boom Pipe.

10. Loosely attach a single barb Nozzle Assembly to each end of the Center Boom Pipe. Place two hose clamps on the two 3/4" x 19" Jumper Hoses and connect the single barb Nozzles to the triple barb Nozzle. Tighten all fasteners securely.

11. Attach the two Strut Assemblies to the two adjustable clevis' found on each side of the Main Frame tube with two (2) 1/2" x 2" clevis pins and two (2) 1/8" x 1" cotter pins.

12. Insert the plugged end of an Extension Boom Pipe into the Pivot Assembly and secure with four (4) 1/4" x 1-1/4" cap screws and lock nuts. See FIG. 22. Repeat on the opposite side to assemble the other Extension Boom.

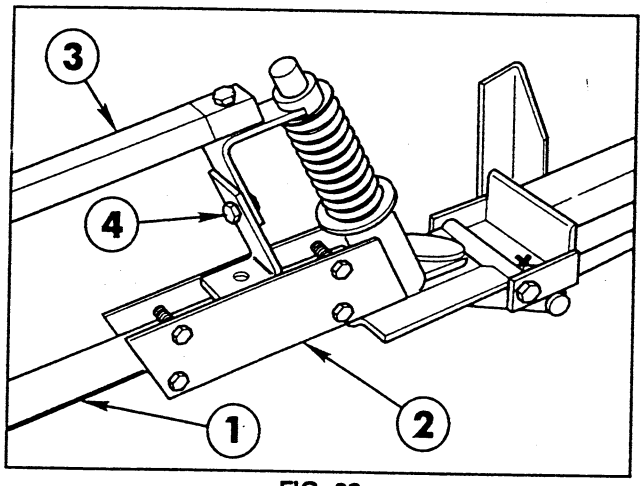

FIG. 22

1. Extension Boom Pipe
2. Pivot Assembly
3. Boom Support Assembly
4. Height Adjustment

IMPORTANT! DO NOT over-tighten the nuts in steps 12 and 14. The clamping action could crush the Boom Pipe.

13. Attach the Boom Support Assembly to the Pivot Assembly, using a 5/16" x 1-1/2" cap screw and lock nut.

14. Secure the two plates of the Boom Support Assembly to the Extension Boom Pipe, using two (2) 1/4" U-bolts, four (4) lock nuts and flat washers. See FIG. 23.

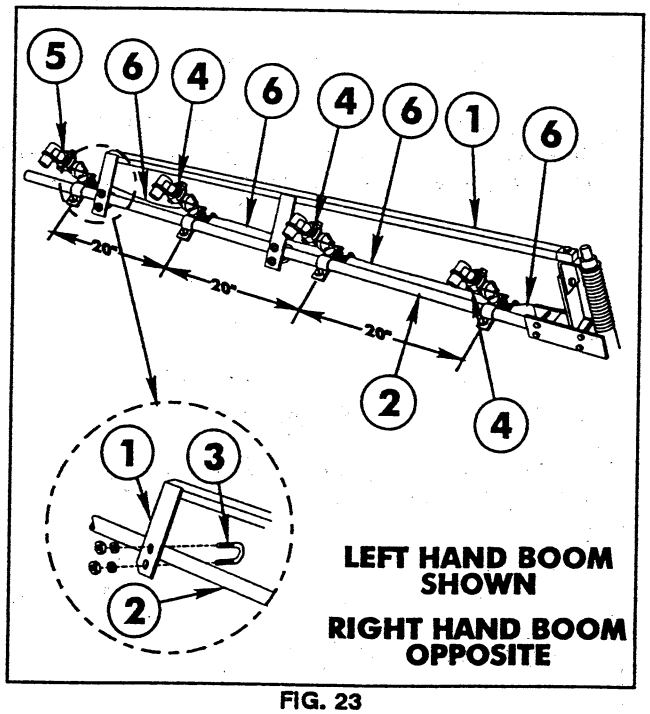

FIG. 23

1. Boom Support Assembly
2. Extension Boom Pipe
3. U-Bolt
4. Double Barb Nozzle
5. Single Barb Nozzle
6. Jumper Hose

15. Assemble the Boom Support Assembly to the other Extension Boom Pipe.

16. Adjust the Booms to a level position by adjusting the jam nuts on the adjustable clevis assemblies (See FIG. 21) to the desired position, then tighten the end nuts against the Main Frame plate.

17. Attach three double barb and one single barb Nozzle Assemblies on each Extension Boom Pipe as shown in FIG. 23. Nozzles are to be spaced on 20 inch centers. Connect the Nozzle Assemblies with the 3/4" x 19" Jumper Hoses. Secure with hose clamps.

FLOW CONTROL WIRING HARNESS:

1. Connect the plug on the Flow Control Wiring Harness to the mating plug from the Control Valve, as shown in FIG. 24. Then make connections to the three Electric Solenoid Valves as shown in DETAIL B of the Electrical Schematic on page 3.

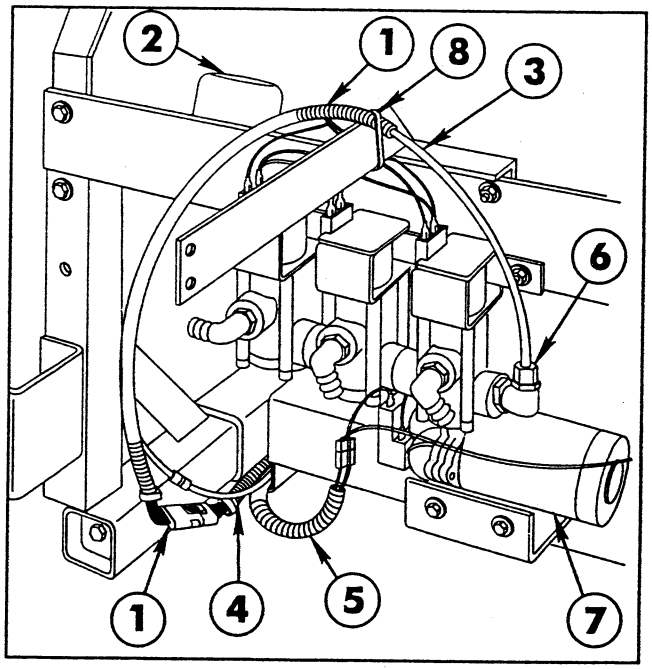

FIG. 24

1. Flow Control Wiring Harness
2. Control Valve
3. Gauge Tube
4. Injection Control Wiring Harness
5. Carrier Control Wiring Harness
6. Splice
7. Rinseate Pump

2. Connect the gauge tube at the reducer bushing in the end of the Solenoid Assembly.

3. Route the Wiring Harness across to the left side of the Vehicle and connect to the Injection Control Wiring Harness.

CARRIER CONTROL WIRING HARNESS

1. Splice the tubing from the Carrier Control Wiring Harness to the tubing from the Flow Control Wiring Harness. See FIG. 24.

2. Connect the plug on the end of the Harness to the mating plug on the Rinseate Pump.

This completes the connections of the Wiring Harnesses.

NOTE: Refer to the Plumbing Schematic on page 12 as an aid to identifying and connecting the hoses and components of the InJector-Pro System.

SUPPLY HOSE (Carrier Tank to Injection Manifold):

1. Install a female quick coupler on one end of the 1" x 58" Supply Hose and secure with a hose clamp.

2. Connect the Supply Hose to the male quick coupler at the discharge (top) port of the Centrifugal Pump.

3. Route the Supply Hose along the left side to the rear of the Vehicle and attach it to the hose barb in the Control Valve. Secure with a hose clamp.

CHEMICAL SUPPLY HOSE (Injector Pump to Injection Manifold):

1. Assemble the adaptor, check valve and barbed elbow onto the close nipple in the tee beside the Control Valve as shown in FIG. 25.

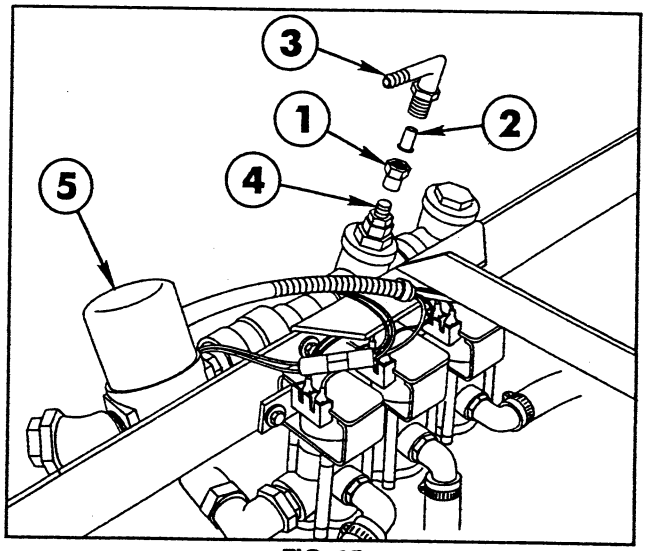

FIG. 25

1. Adaptor
2. Check Valve
3. Barbed Elbow
4. Close Nipple
5. Control Valve

PLUMBING SCHEMATIC
(SPRAYING MODE)

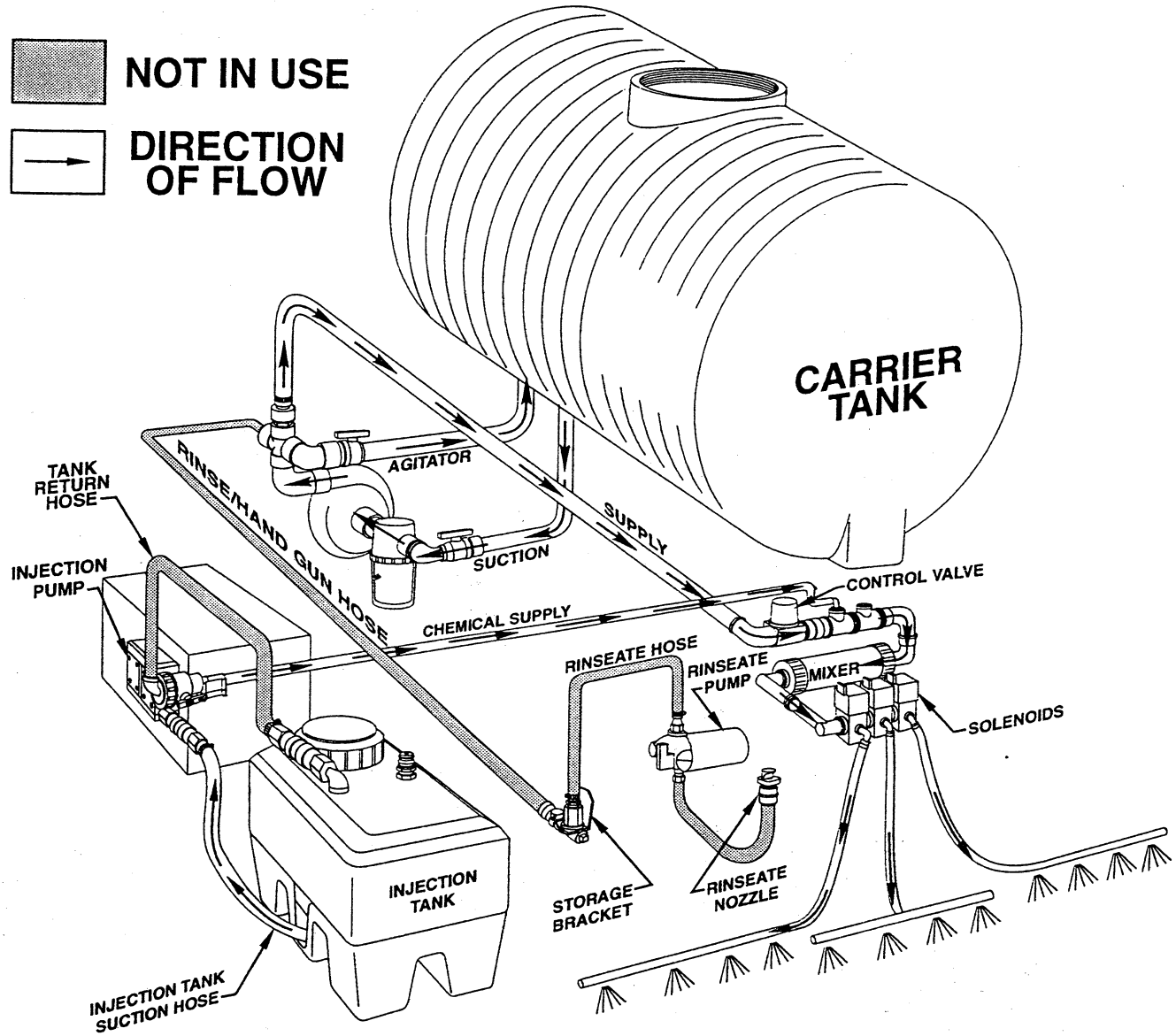

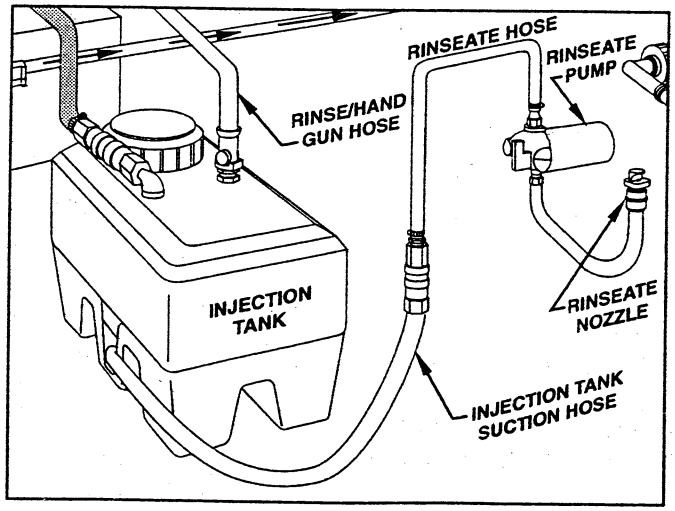

RINSING MODE

CHEMICAL SUPPLY HOSE (con't.)

2. Attach one end of the 3/8" x 48" Chemical Supply Hose to the barbed elbow and secure with a hose clamp.

3. Attach the other end of the Chemical Supply Hose to the hose barb at the Valve on the Injector Pump. Secure with a hose clamp.

INLET HOSE ASSEMBLY (Rinseate Pump to Storage Bracket):

1. Screw the swivel hex nut fitting on the end of the Inlet Hose Assembly onto the threaded port on the **top** of the Rinseate Pump.

2. Insert the male Coupling on the other end of the Inlet Hose Assembly through the grommet in the Storage Bracket located on the left hand Boom Hold-In.

OUTLET HOSE ASSEMBLY (Rinseate Pump to Rinseate Nozzle):

1. Screw the swivel elbow fitting on the end of the Outlet Hose Assembly onto the threaded port on the **bottom** of the Rinseate Pump.

2. Connect the other end of the Outlet Hose Assembly to the hose barb on the bottom of the Rinseate Nozzle. Secure with a hose clamp.

SUCTION HOSE (Carrier Tank to Centrifugal Pump):

1. Connect the female quick coupler on the Suction Hose to the male quick coupler at the Suction Strainer.

AGITATOR HOSE (Carrier Tank to Centrifugal Pump):

1. Connect the female quick coupler on the Agitator Hose to the male quick coupler at the Agitator Valve.

BOOM FEEDER HOSES (Solenoid Valve to Individual Booms):

1. Attach the Boom Feeder Hoses to the barbs in the Solenoids with hose clamps. The two (2) 3/4" x 50" Hoses are to be attached to the hose barbs in the left and right Solenoids. The 3/4" x 36" Hose is to be attached to the barb in the center Solenoid.

2. Place a hose clamp on the center Boom Feeder Hose and attach it to the triple barb Nozzle on the center Boom Pipe.

3. Place a hose clamp on the right and left Boom Feeder Hoses and attach them to the double barb Nozzles on the right and left Boom Pipes.

Tighten all fasteners and hose clamps securely before using the InJector-Pro Spray System.

Fill the Carrier Tank with clean water and check for any leaks.

Refer to the InJector-Pro Spray System Operator's Manual for the proper calibration and operation of this system.

GUARD ASSEMBLY:

Use four (4) 3/8" x 1" cap screws and hex nuts to secure the Guard Assembly to the Shelf flange as shown in FIG. 26.

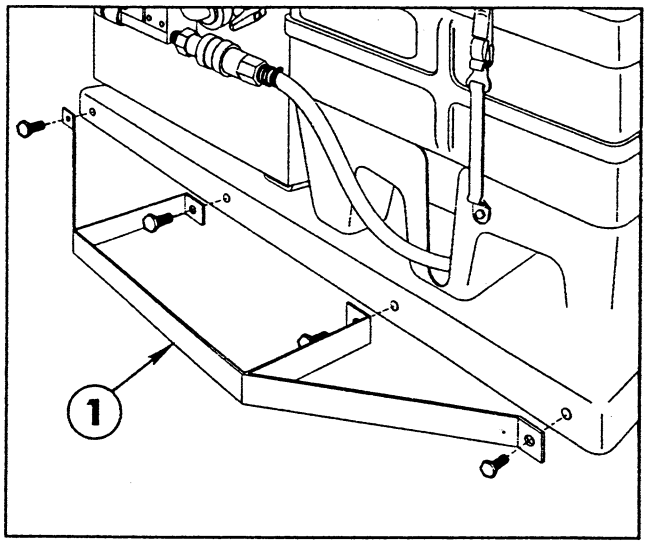

FIG. 26

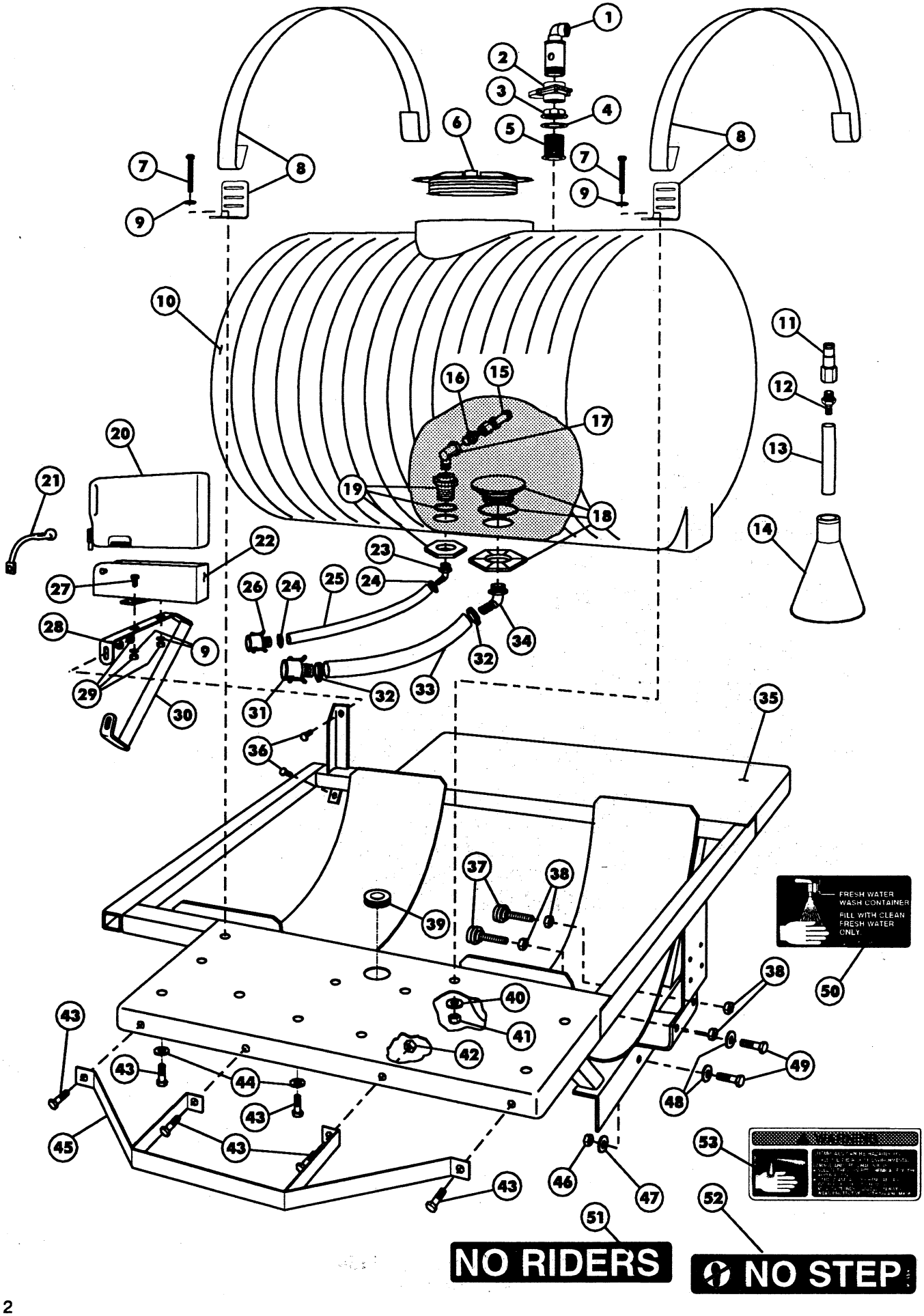
FRESH WATER WASH CONTAINER
FILL WITH CLEAN FRESH WATER ONLY.
NO RIDERS
NO STEP

TANK & SADDLE

Ref	Part No.	Description	Qty
1	43069	Standup Assembly	1
2	43064	Knife Valve	1
3	43068	Fly Nut, 2" NPT	1
4	43067	Sealing Washer	1
5	43066	Bulk Head, 2" NPT	1
6	92-8412	Tank Cover 10" (f/w Tank Ass'y)	1
7	20-38-AGD	Hex Hd Cap Screw 5/16 x 4"	4
8	92-8380	Tank Band	2
9	24-10-BD	Flatwasher, 5/16"	6
10	92-8377	Tank Assembly - 110 Gals.	1
11	92-8381	Male Flat Face Coupling	1
12	92538	Male Hose Coupling	1
13	92-8560	Flow Tube	1
14	92-8585	Calibration Flask	1
15	92-8392	Jet Agitator	1
16	92-8541	Reducing Nipple 3/4 x 1-1/2"	1
17	42940	90° Street Elbow 3/4 NPT	1
18	41798	Anti-Vortex Fitting	
		(f/w Tank Assy.)	1
19	41801	Tank Fitting, 3/4"	
		(f/w Tank Assy.)	1
20	92-3976	Clean Water Wash Tank	1
	93-0828	Spigot (f/w 92-3976 Tank)	1
21	42198	Rubber Hold-Down	1
22	92-3969	Wash Tank Bracket	1
23	92-8413	90° Hose Barb 3/4 MPT x 1/2 HB	1
24	96609	Hose Clamp	2
25	42946	Agitator Hose	1

Ref	Part No.	Description	Qty
26	40487	Female Quick Coupler - 1/2" ID	1
27	20-26-AGD	Hex Hd Screw 5/16 x 1" UNC	2
28	24-10-AD	Flatwasher, 5/16"	2
29	22-12-AJD	Hex Nut, 5/16" UNC	4
30	42983	Hold-in Brace Assembly	1
31	40480	Female Quick Coupler, 1" HB	1
32	21146	Hose Clamp	2
33	42987	Suction Hose	1
34	42057	90° Elbow 1-1/4" MPT x 1" HB	1
35	92-8423	Saddle Assembly	1
36	20-24-AGD	Hex Hd Cap Scr 5/16 x 3/4" UNC	2
37	92-8367	Tank Bumper	4
38	22-15-AJKD	Hex Jam Nut 1/2"	8
39	40764	Grommet	1
40	356303	Washer, 5/16"	4
41	22-12-AJFD	Lock Nut, 5/16"	4
42	22-13-AJD	Hex Nut, 3/8"	4
43	20-45-AGD	Hex Hd Cap Scr 3/8 x 3/4" UNC	8
44	24-11-AD	Flatwasher, 3/8"	4
45	92-8598	Guard Assembly	1
46	22-15-AJD	Hex Nut, 5/16"	2
47	24-13-AD	Flatwasher, 5/16"	2
48	23-13-GD	Lockwasher, 5/16"	2
49	20-87-AGD	Hex Hd Cap Scr 1/2 x 1-1/2 UNC	2
50	93-0800	Decal - Wash Tank	1
51	36-3400	Decal - No Step	2
52	75-5190	Decal - No Riders	2
53	93-0688	Decal - Chemicals	1

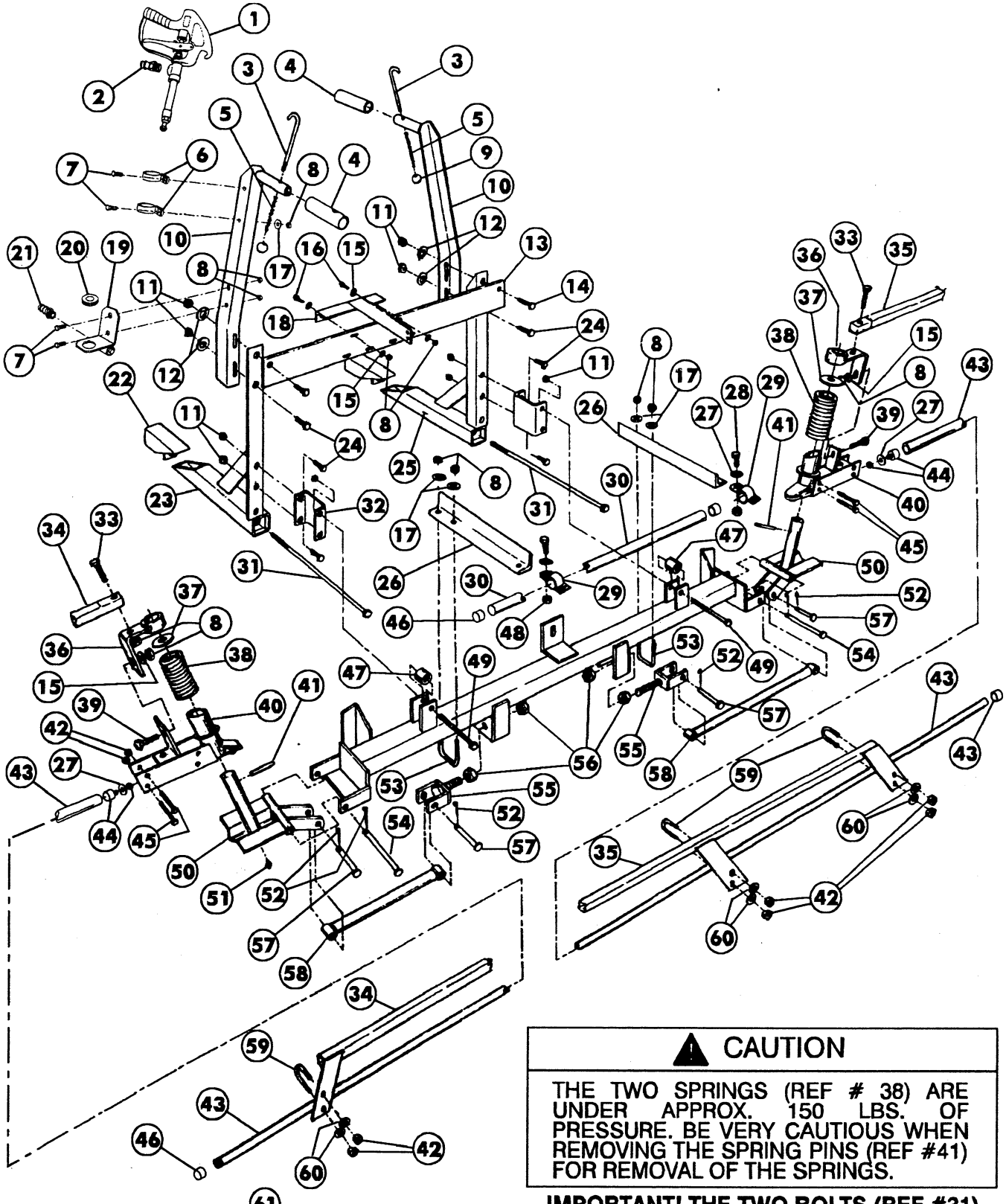

CAUTION

THE TWO SPRINGS (REF # 38) ARE UNDER APPROX. 150 LBS. OF PRESSURE. BE VERY CAUTIOUS WHEN REMOVING THE SPRING PINS (REF #41) FOR REMOVAL OF THE SPRINGS.

IMPORTANT! THE TWO BOLTS (REF #31) MUST BE TORQUED TO 50 FT. LBS.

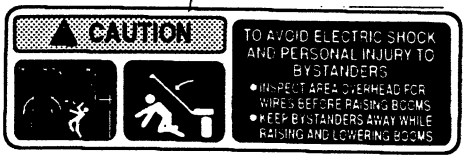

BOOM FRAME

Ref	Part No.	Description	Qty
1	40311	Hand Gun	1
2	92-8383	Plastic Male Coupling	1
3	92-8562	Hold-in Hook	2
4	92-8561	Hold-in Hose	2
5	92-8563	Hold-in Spring	2
6	2412-74	R-Clamp	2
7	20-24-AGD	Hex Hd Cap Screw 5/16 x 3/4" UNC	4
8	22-12-AJD	Hex Nut 5/16" UNC	14
9	92-8564	Hold-in Knob	2
10	92-8534	Boom Hold-in Assembly	2
11	22-15-AJFD	Hex Nut 1/2" UNC	6
12	24-13-AD	Flatwasher 1/2"	4
13	92-8566	Cross Support Strap	1
14	20-87-AGD	Hex Hd Cap Screw 1/2 x 1-1/2 UNC	2
15	24-10-BD	Flatwasher 5/16"	6
16	20-26-AGD	Hex Hd Cap Screw 5/16 x 1" UNC	2
17	24-10-AD	Flatwasher 5/16"	6
18	92-8549	Single Nozzle Mtg. Assembly	1
19	92-8594	Hose Bracket	1
20	92-8596	Grommet	1
21	92-8579	Male Plastic Insert	1
22	42223	Tube Wedge Assembly	2
23	42217	Boom Mount Assembly L.H.	1
24	20-86-AGD	Hex Hd Cap Screw 1/2 x 1-1/4" UNC	6
25	42222	Boom Mount Assembly	1
26	42234	Center Boom Angle	2
27	24-11-AD	Flatwasher 3/8"	4
28	20-47-AGD	Hex Hd Cap Screw 3/8 x 1" UNC	2
29	40494	Clamp Assembly	2
30	40493	Center Boom Pipe	1
31	42199	Hex Hd Cap Screw 1/2 x 18" UNC	2

Ref	Part No.	Description	Qty
32	92-8533	Boom Mounting Bracket	2
33	20-28-AGD	Hex Hd Cap Scr 5/16 x 1-1/2 UNC	2
34	42711	Boom Support Assembly - L.H.	1
35	42710	Boom Support Assembly - R.H.	1
36	42707	Support Bracket Assembly	2
37*	24-18-BD	Flatwasher 1"	2
38*	42196	Compression Spring	2
39	25-25-AGD	Carriage Bolt 5/16 x 3/4" UNC	2
40 *	42706	Breakaway Pivot Assembly	2
41*	29-199-C	Spring Pin, 1/4 x 2"	2
42	22-11-AJFD	Lock Nut 1/4" UNC	8
43	42282	Extension Boom Pipe Assembly	2
44	92-3749	Freeze Plug	2
45	20-8-AGD	Hex Hd Cap Scr 1/4" x 1-3/4" UNC	8
46	92-8420	Boom Cap	4
47	42257	Spacer Tube 1" Lg	2
48	22-13-AJFD	Lock Nut 3/8" UNC	2
49	20-91-AGD	Hex Hd Cap Scr 1/2 x 2-1/2" UNC	2
50*	42243	Hinge Assembly	2
51*	361011	Grease Fitting	2
52	28-18-D	Cotter Pin 1/8 x 1"	6
53	301950	U-Bolt 5/16 UNC	2
54	42194	Clevis Pin 1/2 x 4-1/2"	2
55	42237	Adjustable Clevis Assembly	2
56	22-17-AJD	Hex Nut 5/8"	4
57	42195	Clevis Pin 1/2 x 2"	4
58	42240	Strut Assembly	2
59	92-0010	U-Bolt	4
60	24-9-AD	Flatwasher 1/4"	8
61	87-0570	Decal - Caution Booms	1

* Denotes parts that are available in an assembled unit.

Order #42840 Breakaway Assembly

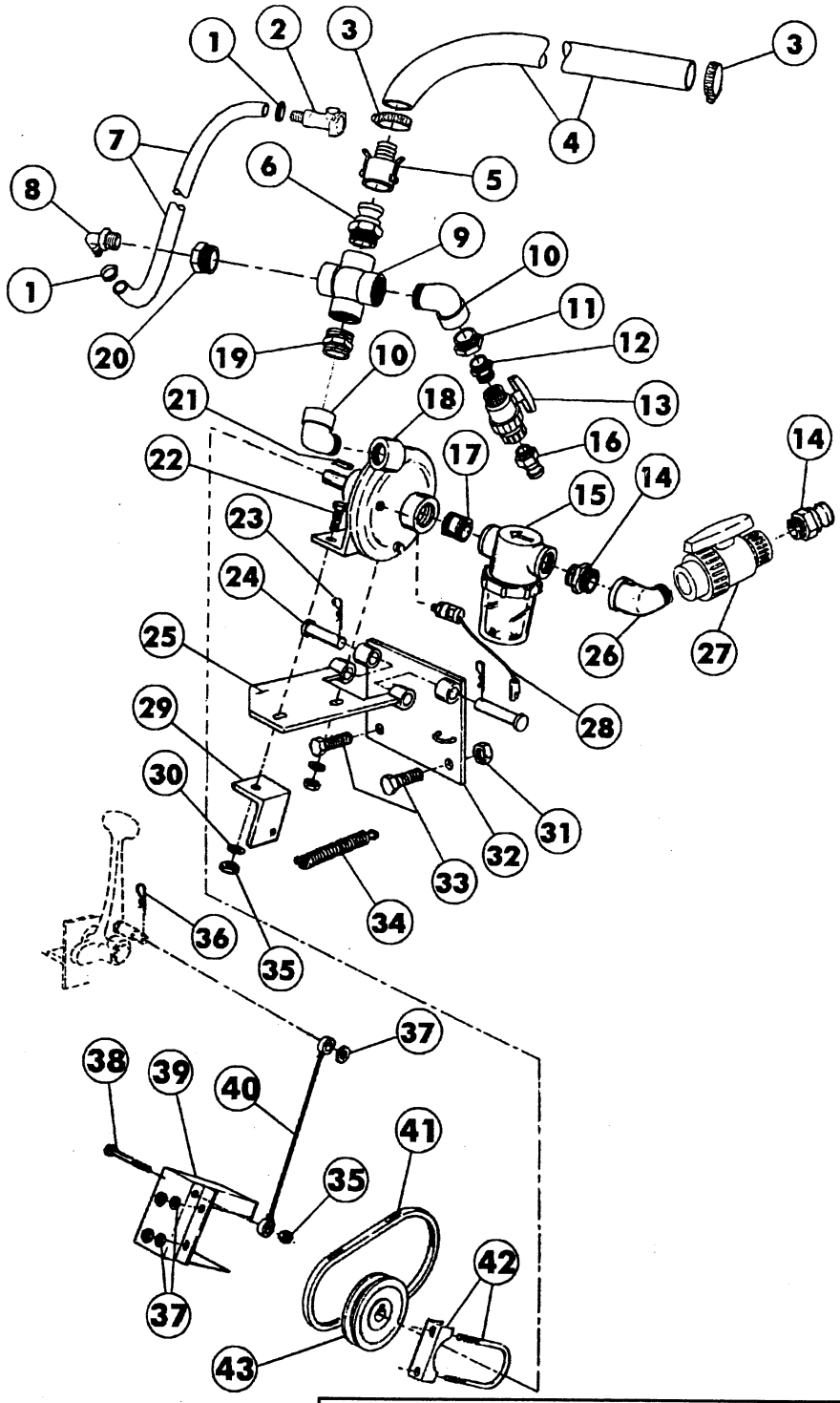

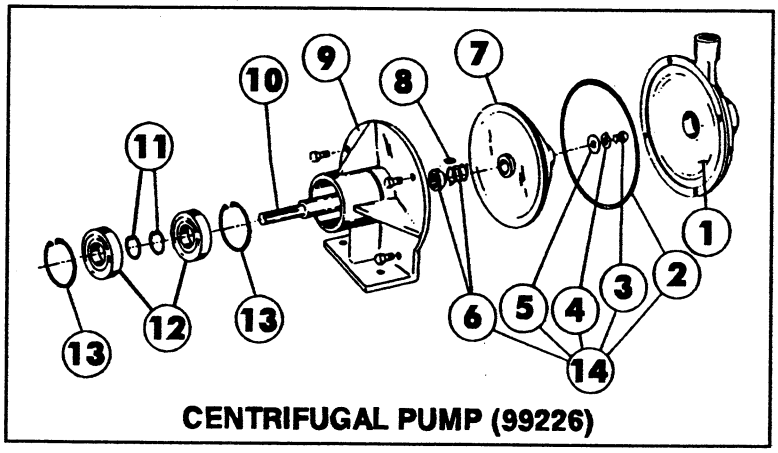

CENTRIFUGAL PUMP (99226)

CENTRIFUGAL PUMP & SUCTION STRAINER

Ref	Part No.	Description	Qty
1	96609	Hose Clamp	2
2	92-8384	Female Coupling - Plastic	1
3	21146	Hose Clamp	2
4	92-8554	Supply Hose, 1" x 58"	1
5	40480	Quick Coupler x 1" Hose Barb	1
6	40479	Quick Adaptor, 1" MPT	2
	41318	Quick Adaptor Cap	2
7	92-8464	Rinse Hose, 1/2" x 108"	1
8	92-8413	90° Hose Barb 3/4 MPT x 1/2 HB	1
9	92-8416	Cross - 1" FPT	1
10	41307	90° St. Elbow 1" NPT	2
11	41306	Reducing Bushing, 1 x 1/2 NPT	1
12	41314	Close Nipple 1/2" NPT	1
13	40192	Ball Valve, 1/2" NPT	1
14	42992	Reducing Nipple	1
		1-1/4" MPT x 1" MPT	1
15	42701	Suction Strainer	1
	93-0687	Strainer Bowl (f/w 42701)	1
	42702	Strainer Screen (f/w 42701)	1
	42703	Strainer Gasket (f/w 42701)	1
16	40486	Quick Adaptor x 1/2" MPT	1
	41317	Quick Adaptor Cap	1
17	92-0050	Close Nipple, 1-1/4 NPT	1
18	99226	Centrifugal Pump	1
19	41304	Close Nipple, 1" NPT	1

Ref	Part No.	Description	Qty
20	43001	Reducing Bushing 1" MPT x 3/4 FPT	1
21	92-0049	Square Key	1
22	20-49-AGD	Hex Hd Cap Screw, 3/8 x 1-1/2" NC	2
23	328967	Hair Pin Cotter	2
24	42195	Clevis Pin, 1/2" x 2	2
25	92-3771	Pump Pivot Plate Assy.	1
26	5706	45° St. Elbow, 1" NPT	1
27	40020	Ball Valve, 1" NPT	1
28	92-8546	Pressure Switch w/ Cap	1
29	41720	Spring Mounting Angle	1
30	24-11-AD	Flatwasher, 3/8"	2
31	22-15-AJFD	Lock Nut, 1/2" NC	2
32	92-3782	Pump Mounting Plate	1
33	20-86-AGD	Hex Hd Cap Screw, 1/2 x 1-1/4" NC	2
34	41721	Pump Spring	1
35	22-13-AJFD	Lock Nut, 3/8" NC	3
36	328963	Hair Pin Cotter	1
37	24-11-BD	Flatwasher, 3/8 SAE	3
38	20-59-AGD	Hex Hd Cap Screw, 3/8 x 4" NC	1
39	41142	Pump Belt Cover	1
40	42993	Pump Cable	1
41	42989	Pump Drive Belt	1
42	31132	Belt Cover Clamp	1
43	40198	Pump Pulley	1

CENTRIFUGAL PUMP (99226)

Ref	Part No.	Description	Qty
1	27475	Volute	1
2	27489	O-Ring	1
3	27484	Cap Screw, 5/16 x 1/2 SS	1
4	27485	Lock Washer, 5/16 x 1/2 SS	1
5	27487	Flatwasher, 5/16 Stainless Steel	1
6	27478	Shaft Seal	1
	41740	Optional heavy-duty Seal	1
7	27482	Impeller	1

Ref	Part No.	Description	Qty
8	27486	Square Key, 3/16 x 1/2	1
		Stainless Steel	
9	27476	Frame	1
10	27477	Shaft, Stainless Steel	1
11	27483	Lock Ring	1
12	27479	Bearing	2
13	27480	Lock Ring	1
14	27490	Repair Kit	AR

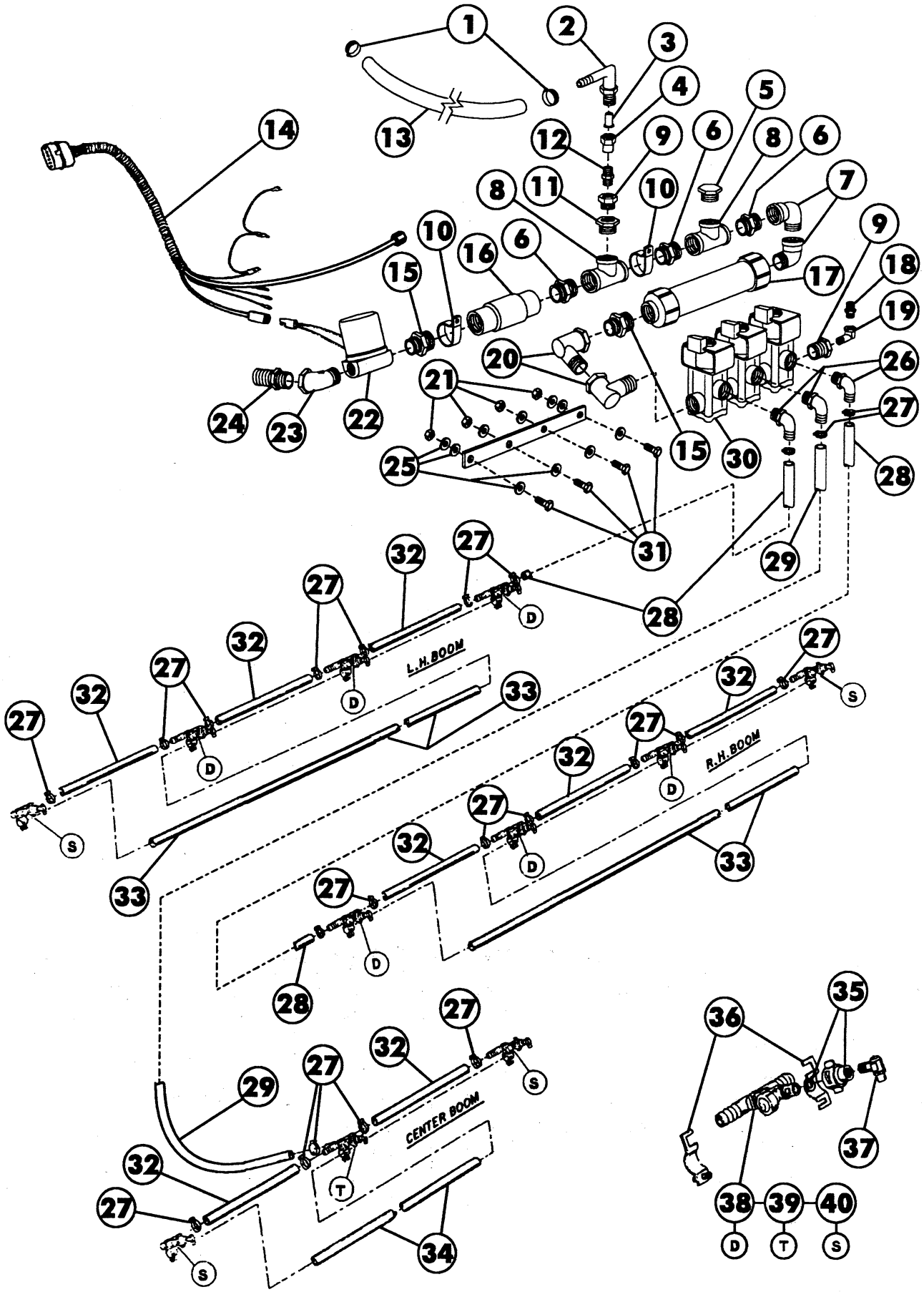
L.H. BOOM
R.H. BOOM
CENTER BOOM

MOTORIZED CONTROL VALVE & BOOMS

Ref	Part No.	Description	Qty
1	96609	Hose Clamp	2
2	41290	90° Nozzle Body	1
3	41291	Check Valve	1
4	41289	Outlet Adapter	1
5	41315	Hex Plug	1
6	41304	Close Nipple	3
7	41307	90° Street Elbow	2
8	41305	Tee	2
9	41310	Reducing Bushing	1
10	92-8385	R-Clamp	2
11	43001	Reducing Bushing	1
12	41288	Close Nipple	1
13	92-8453	Chemical Supply Hose	1
14	92-8592	Flow Control Cable	1
15	41309	Reducing Bushing	2
16	92-8378	Check Valve 1"	1
17	93-8584	In-Line Mixer 2"	1
18	42931	Male Fitting	1
19	41311	90° Street Elbow	1
20	42940	90° Street Elbow 3/4" NPT	2
21	22-12-AJD	Hex Nut 5/16" Plated	4
22	42936	Control Valve	1
23	42939	45° Street Elbow 3/4" NPT	1
24	41730	Hose Barb	1
25	24-10-BD	Flatwasher 5/16"	10

Ref	Part No.	Description	Qty
26	92-8557	90° Hose Barb 1/2 MPT x 3/4" HB	3
27	92-0045	Hose Clamp, 3/4" Hose	22
28	41340	Boom Hose (Right & Left) 3/4 x 50"	2
29	42274	Boom Hose (Center) 3/4 x 36"	1
30	92-0355	Electric Solenoid Valve (100 P.S.I.)	1
	92-0356	Single Solenoid	AR
	92-0357	Seal Kit for 92-0356 Valve	AR
31	20-26-AGD	Hex Hd Cap Screw 5/16 x 1" UNC	3
32	40506	Jumper Hose, 3/4 x 19"	8
33	42282	Extension Boom Pipe Assembly	2
34	40493	Center Boom Pipe	1
35	40997	Adaptor Cap & Seat Gasket Ass'y	11
	40998	Seat Gasket (f/w 40997)	AR
36	40999	Clamp Assembly	11
37	40444	RA-10 Raindrop Nozzle (Std.)	11
	40223	RA-15 Raindrop Nozzle (Optional)	11
	41088	RA-6 Raindrop Nozzle (Optional)	11
	42828	RA-8 Raindrop Nozzle (Optional)	11
38	41001	Nozzle Body & Check Valve (Double Barb)	6
39	41002	Nozzle Body & Check Valve (Triple Barb)	1
40	41000	Nozzle Body & Check Valve (Single Barb)	4

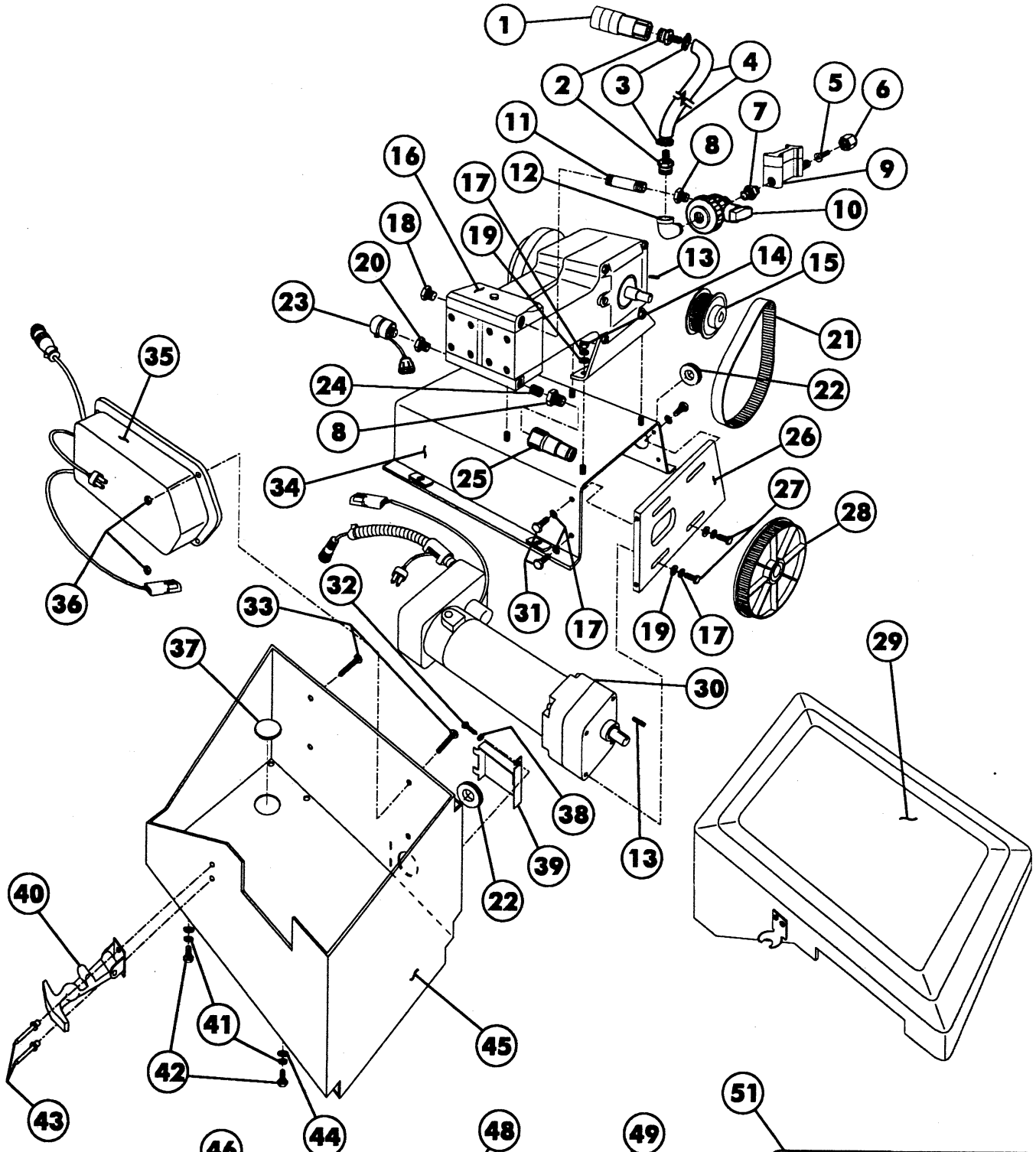
1
2
3
4
5
6
7
8
9
10
11
12
13
14
15
16
17
18
19
20
21
22
23
24
25
26
27
28
29
30
31
32
33
34
35
36
37
38
39
40
41
42
43
44
45
17
19
17
22
13

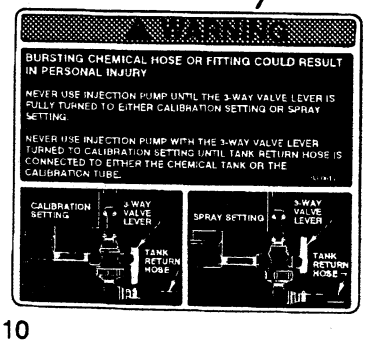
WARNING
BURSTING CHEMICAL HOSE OR FITTING COULD RESULT IN PERSONAL INJURY
NEVER USE INJECTION PUMP UNTIL THE 3-WAY VALVE LEVER IS FULLY TURNED TO EITHER CALIBRATION SETTING OR SPRAY SETTING.
NEVER USE INJECTION PUMP WITH THE 3-WAY VALVE LEVER TURNED TO CALIBRATION SETTING UNTIL TANK RETURN HOSE IS CONNECTED TO EITHER THE CHEMICAL TANK OR THE CALIBRATION TUBE.
CALIBRATION SETTING
3-WAY VALVE LEVER
TANK RETURN HOSE
SPRAY SETTING
3-WAY VALVE LEVER
TANK RETURN HOSE


TORO


WARNING
SHIELD MISSING DO NOT USE

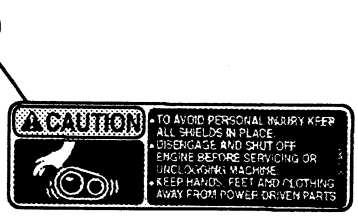
CAUTION
• TO AVOID PERSONAL INJURY KEEP ALL SHIELDS IN PLACE
• DISENGAGE AND SHUT OFF ENGINE BEFORE SERVICING OR UNCLOGGING MACHINE
• KEEP HANDS, FEET AND CLOTHING AWAY FROM POWER DRIVEN PARTS

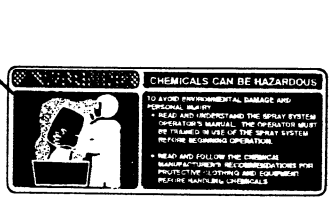
CHEMICALS CAN BE HAZARDOUS
TO AVOID ENVIRONMENTAL DAMAGE AND PERSONAL INJURY:
• READ AND UNDERSTAND THE SPRAY SYSTEM OPERATOR'S MANUAL. THE OPERATOR MUST BE TRAINED IN USE OF THE SPRAY SYSTEM BEFORE BEGINNING OPERATION.
• READ AND FOLLOW THE CHEMICAL MANUFACTURER'S RECOMMENDATIONS FOR PROTECTIVE CLOTHING AND EQUIPMENT BEFORE HANDLING CHEMICALS

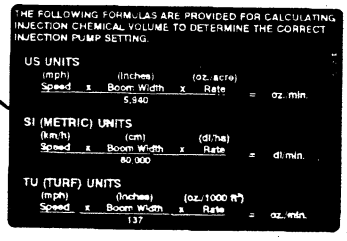
THE FOLLOWING FORMULAS ARE PROVIDED FOR CALCULATING INJECTION CHEMICAL VOLUME TO DETERMINE THE CORRECT INJECTION PUMP SETTING.
US UNITS
(mph) (inches) (oz./acre)
Speed x Boom Width x Rate = oz./min.
5,940
SI (METRIC) UNITS
(km/h) (cm) (dl/ha)
Speed x Boom Width x Rate = dl/min.
60,000
TU (TURF) UNITS
(mph) (inches) (oz./1000 ft²)
Speed x Boom Width x Rate = oz./min.
137

INJECTION PUMP ASSEMBLY (92-8447)

Ref	Part No.	Description	Qty
1	92-8382	Female Flat Face Coupling	1
2	92-8459	Hose Barb 1/2 MPT x 3/8"	2
3	96609	Hose Clamp	2
4	92-8570	Calibration Hose	1
5	93-0789	Hose Shank Fitting	1
6	93-0788	Nozzel Cap Fitting	1
7	93-0787	Nozzel Nipple Fitting	1
8	93-0781	Reducing Bushing	2
9	93-0785	Flow Switch Assembly	1
	93-1020	Magnet 3/4" (f/w 93-0785)	1
	93-1018	Cap Plug (f/w 93-0785)	1
	93-1019	Spring 1/4" OD (f/w 93-0785)	1
10	93-0872	3-Way Ball Valve	1
	93-0915	Valve Union Nut	1
11	93-0900	Pipe Nipple 3/8 NPT x 2-1/2"	1
12	92-8452	90° St. Elbow ST'N ST'L	1
13*	93-0671	Square Key	2
14*	22-11-AJD	Hex Nut 1/4" - 20 UNC	4
15*	93-0763	Small Timing Pulley	1
16*	93-0764	Pump Assembly Calabrated	1
17*	93-0606	Lock Washer 1/4"	12
18	93-0786	Hex HD Pipe Plug	1
19*	24-9-AD	Flatwasher 1/4"	8
20	93-0790	Reducing Bushing	1
21*	93-0760	Timing Belt	1
22*	93-0692	Grommet	2
23	93-0784	Vacuum Switch Assembly	1
24	93-0783	Close Pipe Nipple	1

Ref	Part No.	Description	Qty
25	93-8381	Male Flat Face Coupling	1
26*	93-0765	Motor Mount Bracket	1
27*	20-5-AGD	Hex HD Cap Screw 1/4-20 UNC x 1"	4
28*	93-0762	Large Timing Pulley	1
29	93-0777	Injection Pump Box Lid	1
30*	93-0766	Motor Assembly	1
31*	93-0605	Hex HD Cap Screw 1/4 x 5/8"	1
32	93-0773	Pan HD Mach. Screw #8 UNC x 1/2"	1
33	93-0775	Pan HD Mach Screw #10 UNF x 1"	4
34*	93-0767	Pump Platform	1
35	93-0774	Motor Control Assembly	1
36	93-0776	Lock Nut #10 UNF	4
37	93-0769	Hole Plug	1
38	93-0791	Lock Washer #8	1
39	93-0772	Cable Shield	1
40	93-0779	Rubber Drawlatch	1
41	93-0771	Lock Washer 1/4"	4
42	93-0770	Hex HD Mach Bolt	4
43	93-0780	Pop Rivet 3/16 x .40 LG.	2
44	93-0792	Flat Washer 1/4"	4
45	93-0778	Injection Pump Box	1
46	93-0617	Decal - Valve Warning	1
47	92-8545	Decal - Warning Chemicals	1
48	67-7320	Decal - Toro	1
49	88-8950	Decal - Shield Warning	1
50	92-8543	Decal - Formula	1
51	87-0450	Decal - Personal Injury	1

* Denotes parts that are available in an assembled unit.
Order #93-0768 Low Vol. Pump/Motor Assembly

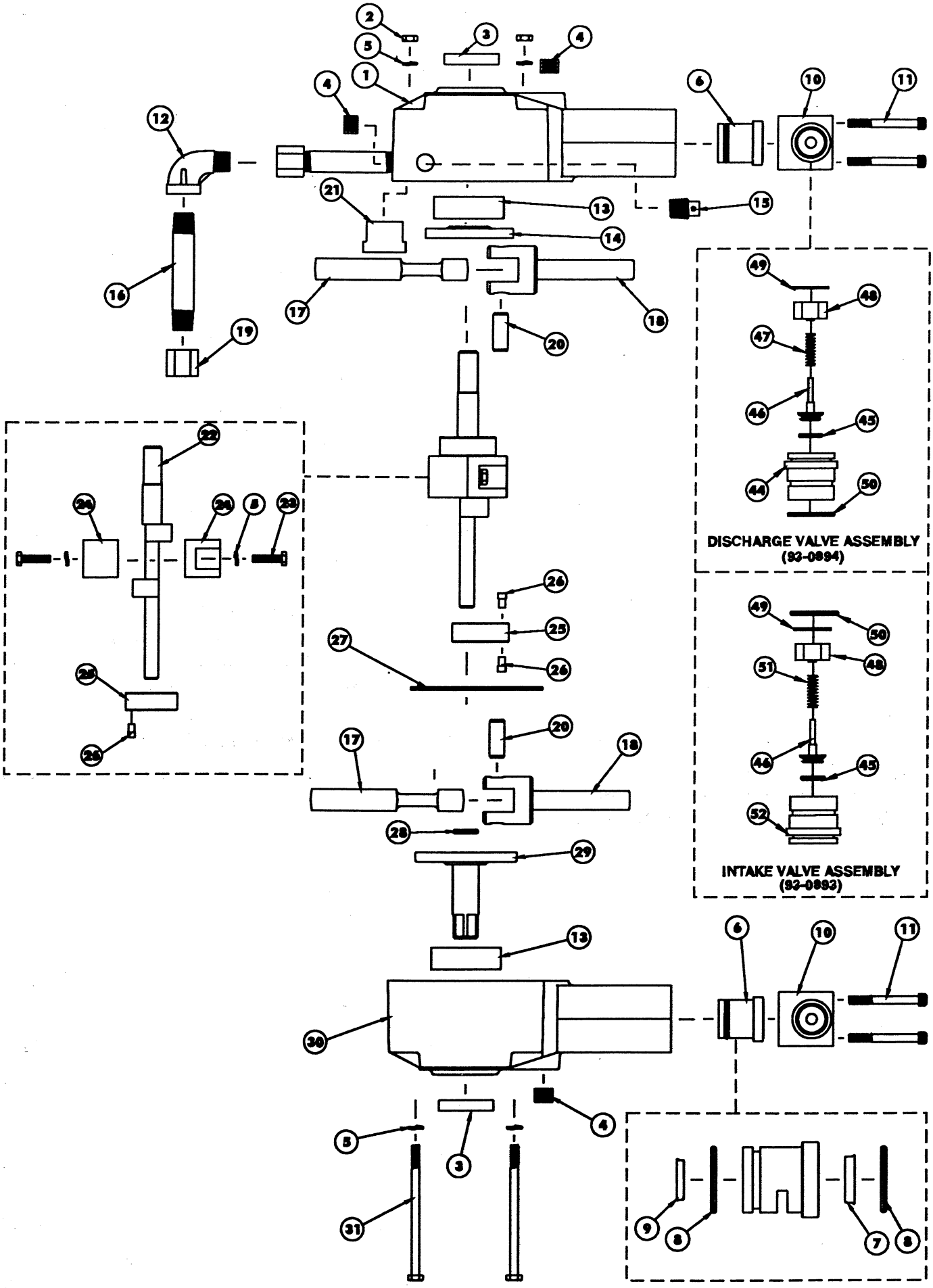
DISCHARGE VALVE ASSEMBLY
(93-0894)
INTAKE VALVE ASSEMBLY
(93-0893)

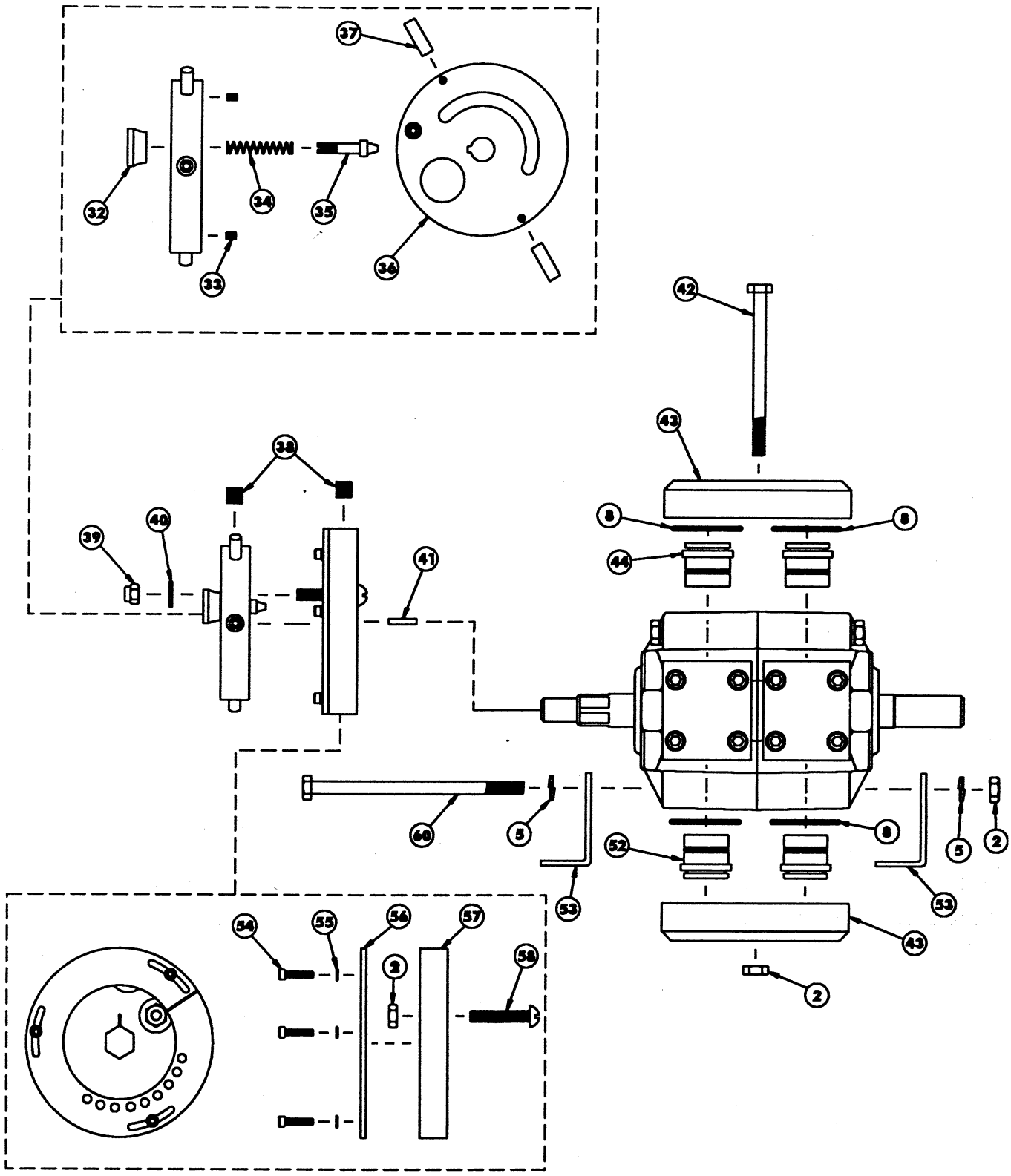
37
32
34
35
33
36
42
43
38
39
40
41
8
8
44
60
5
8
52
5
2
53
53
43
54
55
56
57
58
2
2

INJECTION PUMP REPLACEMENT PARTS

Ref	Part No.	Description	Qty
1	93-0693	Left Pump Half	1
2	93-0694	1/4 - 20 Stainless Steel Nut	5
3	93-0695	17mm Shaft Seal	2
4	93-0696	Socket Head Pipe Plug	3
5	93-0697	1/4" Split Washer	10
6	93-0698	Seal Sleeve	2
7	93-0699	Head Poly Pak Seal	2
8	93-0700	O-Ring, Viton	8
9	93-0701	Crankcase Poly Pak Seal	2
10	93-0702	Pump Head	2
11	93-0703	Socket Head Screw	8
12	93-0704	Elbow	2
13	93-0705	17mm Ball Bearing	2
14	93-0706	End Spacer	1
15	93-0707	Vented Breather Plug	1
16	93-0708	Pipe Nipple	1
17	93-0709	Connecting Rod	2
18	93-0710	Plunger	2
19	93-0711	Pipe Cap	1
20	93-0712	Dowel Pin	2
21	93-0713	Crankcase Baffle	1
22	93-0714	Crankshaft	1
23	20-5-AGD	1/4 - 20 x 1" Hex Cap Screw	2
24	93-0715	Eccentric Spacer Half	2
25	93-0716	Eccentric	2
26	93-0717	Eccentric Pin	3
27	93-0718	O-Ring, Buna-N	1
28	93-0719	O-Ring, Buna-N	1
29	93-0720	Stroke Adjustment Sleeve	1
30	93-0721	Right Pump Half	1

Ref	Part No.	Description	Qty
31	93-0722	1/4 - 20 x 4-1/4" Modified Bolt	2
32	93-0723	Knob	1
33	93-0724	6-32 UNC Set Screw	2
34	93-0725	Stainless Steel Spring	1
35	93-0726	Pin	1
36	93-0727	Printed Magnet Wheel	1
37	93-0728	Magnet	2
38	93-0729	1/4 - 20 UNC Set Screw	2
39	93-0730	Nylon Insert Lock Nut	1
40	24-7-BD	#10 Flat Washer	1
41	93-0731	1/8" Square Key	1
42	93-0732	1/4 - 20 x 3-3/4" Stainless Steel Bolt	1
43	93-0733	Manifold	2
44	93-0734	Discharge Valve Body	1
45	93-0735	O-Ring, Viton (V965-80)	2
46	93-0736	Poppet	2
47	93-0737	Discharge Coil Compression Spring	1
48	93-0738	Poppet Valve Guide	2
49	93-0739	Internal Retaining Ring	2
50	93-0740	O-Ring, Viton	2
51	93-0741	Intake Coil Compression Spring	1
52	93-0742	Intake Valve Body	1
53	93-0743	Bracket	2
54	93-0745	6-32 x 5/8" Cap Screw	3
55	93-0746	Flat Washer	3
56	93-0747	Index Ring	1
57	93-0748	Calibration Wheel	1
58	93-0749	1/4 - 20 x 1-3/4" Machine Screw	1
59	93-0750	1/4 - 20 x 4-1/2" Stainless Steel Bolt	2

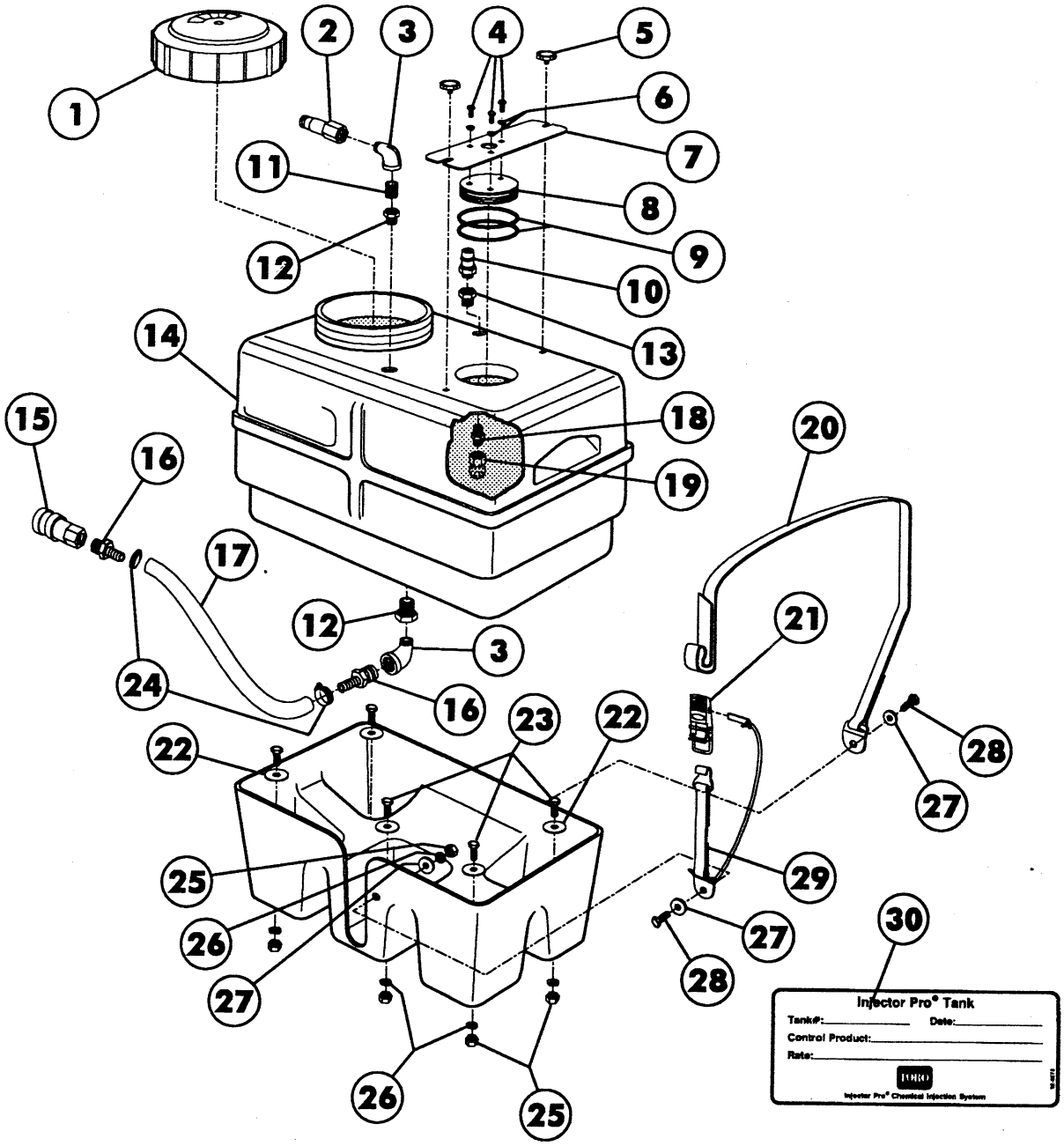

INJECTION TANK ASSEMLY (92-8449)

Ref	Part No.	Description	Qty
1	93-0756	Injection Tank Lid	1
2	92-8381	Male Flat Face Coupling	1
3	92-8452	90° St. Elbow ST'N ST'L	2
4	93-0605	Hex Hd Cap Screw 1/4 x 5/8"	3
5	93-0607	Male Threaded Knob	2
6	93-0606	Lock Washer 1/4"	3
7	93-0754	Agitator Mount Bracket	1
8	93-0755	Agitator Hole Plug	1
9	93-0753	O-Ring	2
10	92-8383	Male Coupling - Plastic	1
11	92-8456	Close Nipple 1/2" NPT ST'N ST'L	1
12	92-8457	Red. Bushing 3/4 x 1/2"	2
13	92-8455	Red. Bushing -3/4 x 1/2" D'ble Tap	1
14	92-8451	Injection Tank - 8 Gallon	1
15	92-8382	Female Flat Face Coupling	1
16	92-8458	Hose Barb 1/2 MPT x 1/2"	2
17	92-8453	Supply Hose	1

Ref	Part No.	Description	Qty
18	41314	Close Nipple 1/2" NPT	1
19	92-8571	Rinsing Nozzle	1
20	93-0757	8 Gallon Strap Assembly	1
21	93-0759	Over Center Buckle	1
22	356308	Flat Washer 3/8"	5
23	20-48-AGD	Hex HD. Cap Scr 3/8 UNC x1-1/4"	5
24	96609	Hose Clamp	2
25	22-13-AJD	Hex Nut 3/8" UNC	7
26	23-11-GD	Lock Washer 3/8"	7
27	24-11-AD	Flat Washer 3/8"	7
28	20-47-AGD	Hex HD. Cap Screw 3/8 UNC x 1"	2
29	93-0758	Quick Disconnect Strap Ass'y	1
30	92-8572	White Tank Decal	1
	92-8573	Yellow Tank Decal	1
	92-8574	Green Tank Decal	1
	92-8575	Blue Tank Decal	1

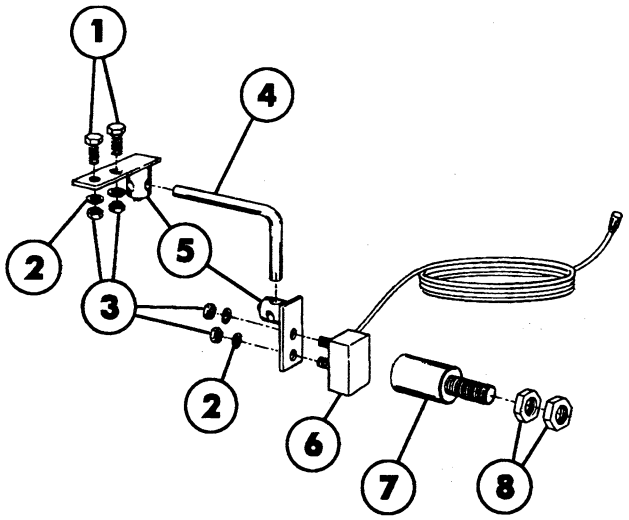

SPEED SENSOR

Ref	Part No.	Description	Qty
1	20-5-AD	HHCS, 1/4 NC x 1"	2
2	23-9-GD	Lock Washer, 1/4	4
3	22-11-AJD	Hex Nut, 1/4 NC	4
4	41479	Sensor Rod	1
5	41478	Turret Assembly	2
6	41477	Sensor Switch Assembly	1
7	41475	Magnet Assembly (Red)	2
	41476	Magnet Assembly (Black)	2
8	22-15-AJD	Hex Nut, 1/2 NC	8

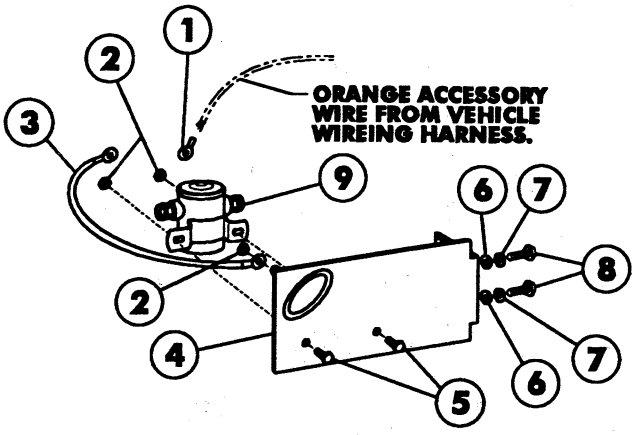

RELAY BRACKET

Ref	Part No.	Description	Qty
1	92-0069	Ring Terminal	1
2	22-11-AJD	Hex Nut, 1/4"	3
3	93-0616	Relay Ground	1
4	92-8538	Relay Bracket	1
5	34-140-AMVD	Self Tapping Screw 1/4 x 5/8"	2
6	24-10-AD	Flatwasher, 5/16"	2
7	23-10-GD	Lockwasher, 5/16"	2
8	20-24-AGD	Hex Hd Cap Screw 5/16 x 3/4"	2
9	92-8586	Power Contactor Relay	1

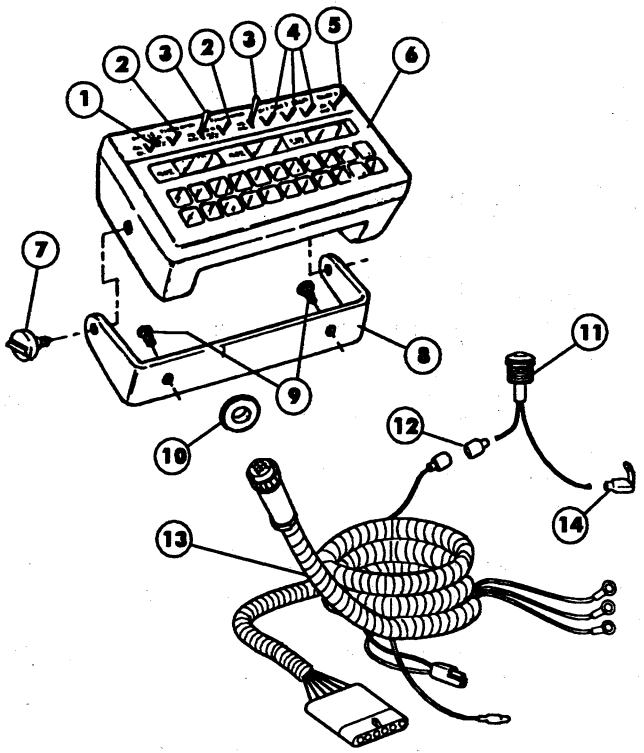

CONTROL CONSOLE

Ref	Part No.	Description	Qty
1	42722	Power Switch	1
2	42723	Auto/Manual/Flush Switch	2
3	42724	Increase/Decrease	2
4	42558	Boom Switch	3
5	42725	Master Switch	1
	42715	Fuse Holder	1
6	92-8580	Control Console	1
7	41473	Mounting Knob	2
8	41474	Mounting Bracket	1
9	92-3911	Flange Bolt Hd., 1/4 x 3/4"	2
10	40764	Grommet	1
11	93-0807	Pump Pressure Warning Light	1
12	42827	Insulated Terminal	1
13	92-8583	Injector Control Cable	1
14	93-0822	Male/Female Terminal	1

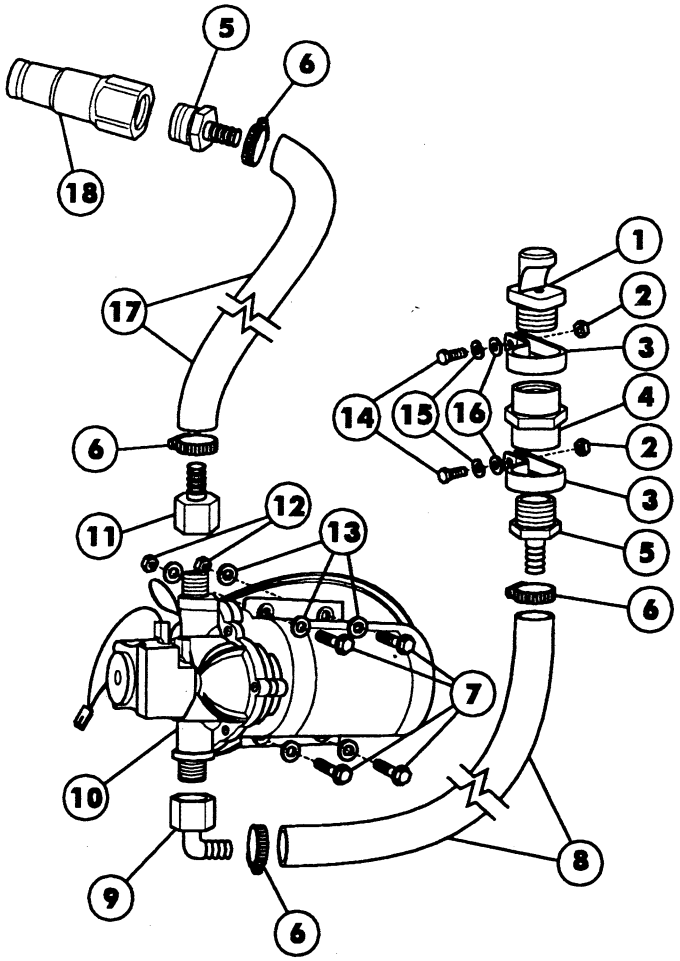

SINGLE NOZZLE ASSEMBLY

Ref	Part No.	Description	Qty
1	92-8408	Nozzle	1
2	22-11-AJD	Hex Nut - 1/4"	2
3	2412-106	Vinyl R-Clamp	2
4	92-8552	Female Pipe Coupling - 1/2"	1
5	92538	Male Hose Coupling - 1/2"	2
6	96609	Hose Clamp No. MGH	4
7	21-103-AMD	Hex Hd. Mach. Screw, #10 x 1-1/4"	4
8	92-8446	Pump Outlet Hose	1
9	92-8405	Elbow Pump Fitting	1
10	92-8460	Rinsate Pump	1
11	92-8404	Strait Pump Fitting	1
12	22-9-AJFD	Hex Lock Nut #10	4
13	24-7-BD	Flat Washer	8
14	20-3-AGD	Hex Hd. Cap Screw, 1/4 x 3/4	2
15	23-9-GD	Lock Washer - 1/4"	2
16	24-9-BD	Flat Washer - 1/4"	2
17	92-8444	Pump Inlet Hose	1
18	92-8381	Flat Face Male Coupling	1

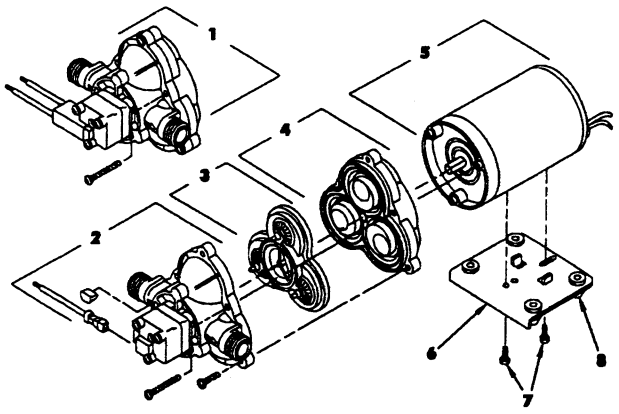

92-8460 RINSATE PUMP

Ref	Part No.	Description	Qty
1	93-0793	Pump Head Complete	1
2	93-0794	Switch Kit (f/w 93-0793)	1
3	93-0795	Valve Kit (f/w 93-0793)	1
4	93-0796	Drive Kit (f/w 93-0793)	1
5	93-0797	Motor	1
6	93-0812	Mounting Plate with Feet	1
7	93-0814	Self Tapping #10 UNF	2
8	93-0813	Foot (f/w 93-0812)	4

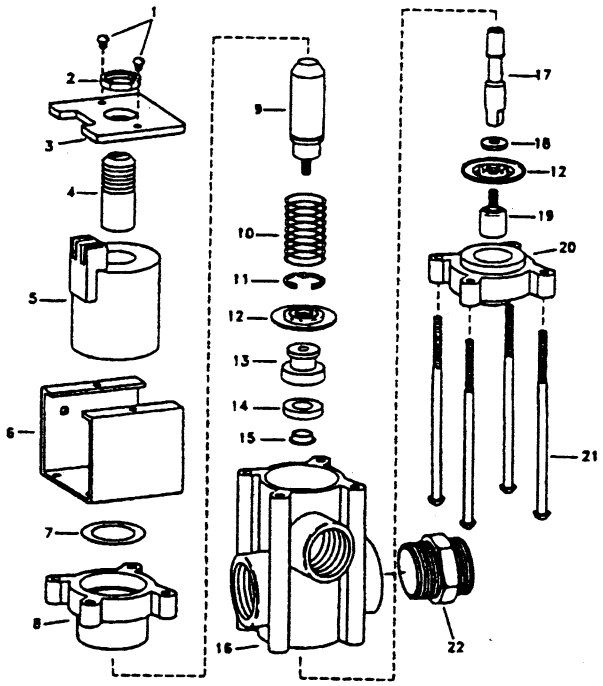

SOLENOID VALVE (92-0356)

Ref	Part No.	Description	Qty
1	42126	Screw, Stainless Steel	2
2	92-0358	Jam Nut-Electroless Nickel Plated	1
3	92-0359	Coil Cover - Steel Epoxy Painted	1
4	92-0360	Armature Stop - Steel Electroless	1
5	92-0361	Coil Ass'y - (Black)	1
6	92-0362	Strap - Steel, Epoxy Painted	1
7	92-0363	Washer - Stainless Steel	1
8	92-0364	Upper Diaphragm Housing -	1
9	92-0365	Armature - Steel	1
10	***	Spring - Type 302 Stainless Steel	1
11	92-0366	Retaining Ring - Steel	1
12	***	Diaphragm - Viton (optional)	2
13	92-3681	Seal Washer Retainer - ST'N ST'L	1
14	***	Seal Washer - Viton (optional)	1
15	42136	Spacer - Stainless Steel	1
16	42137	Body, Polypropylene (Black)	1
17	92-3682	Stem - Stainless Steel	1
18	42134	Washer - Stainless Steel	1
19	92-0367	Lower Diaphragm Piston - ST'N ST'L	1
20	92-0368	Lower Diaphragm Housing -	1
21	42143	Screw - Stainless Steel	4
22	42884	Connecting Nipple-Nylon (Black)	AR

*** Indicates parts included in Viton Seal Kit.
Order Part No. 92-0357.

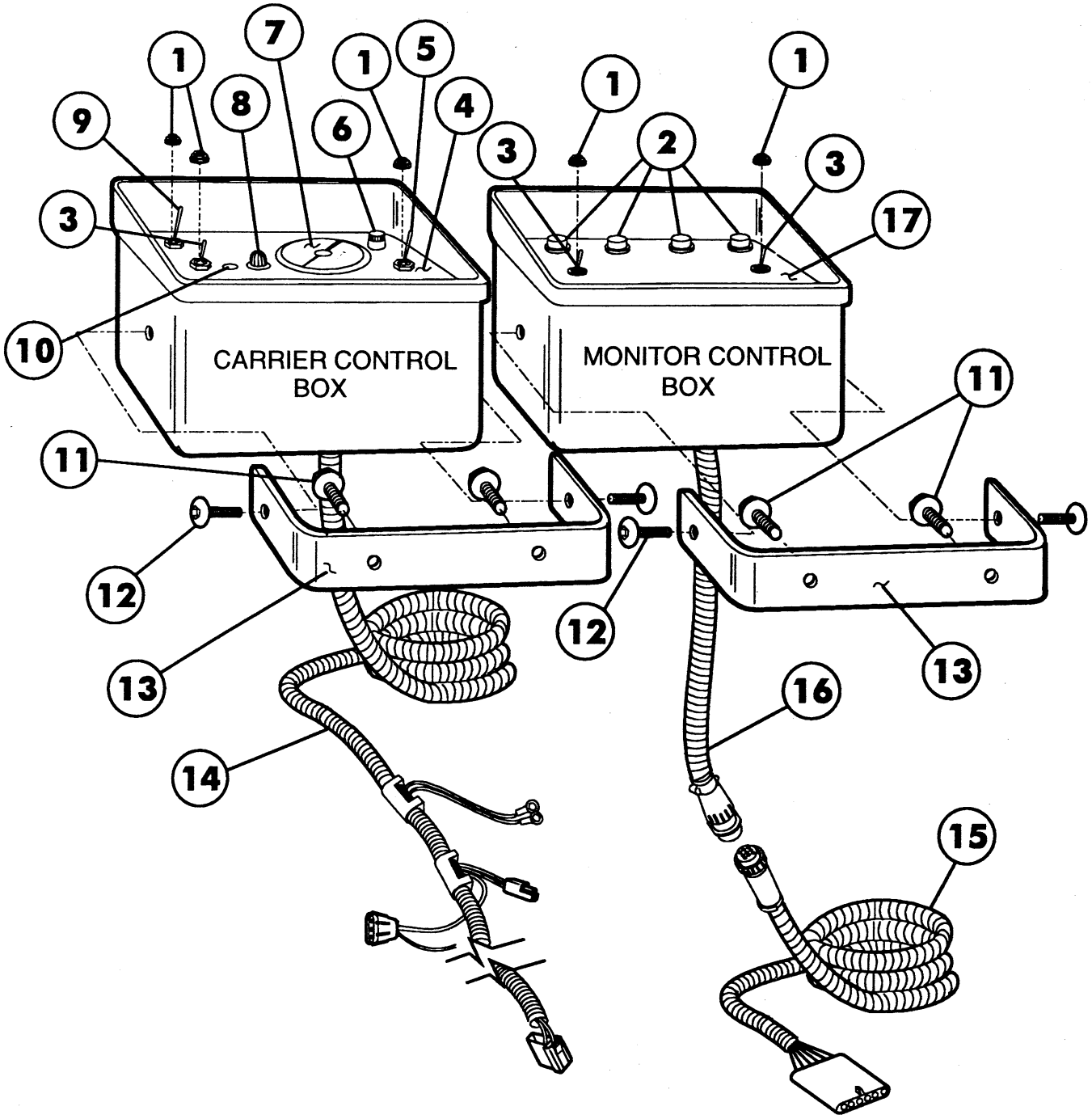

MONITOR CONTROL BOX (92-8581)
CARRIER CONTROL BOX (92-8587)

Ref	Part No.	Description	Qty
1	92-8531	Switch Boot	5
2	93-0934	Light	4
3	42921	Switch	3
4	93-0938	Carrier Face Plate	1
5	42927	Pressure Switch	1
6	92-0251	Fuse Holder	1
7	42924	Gauge	1
8	44-2212	Light (Amber)	1
9	42923	Master Switch (Long)	1

Ref	Part No.	Description	Qty
10	93-0939	Cap	1
11	34-140-AMVD	Hex Washer Hd Self-Tapping Screw, 1/4 NC x 5/8"	4
12	92-3911	Flanged Bt Hd Cs 1/4 x 3/4"	4
13	42920	Mounting Bracket	2
14	93-0937	Carrier Harness	1
15	92-8582	Monitor Cable	1
16	93-0936	Monitor Lead Cable	1
17	93-0935	Monitor Face Plate	1

INJECTOR PRO ALTERNATOR

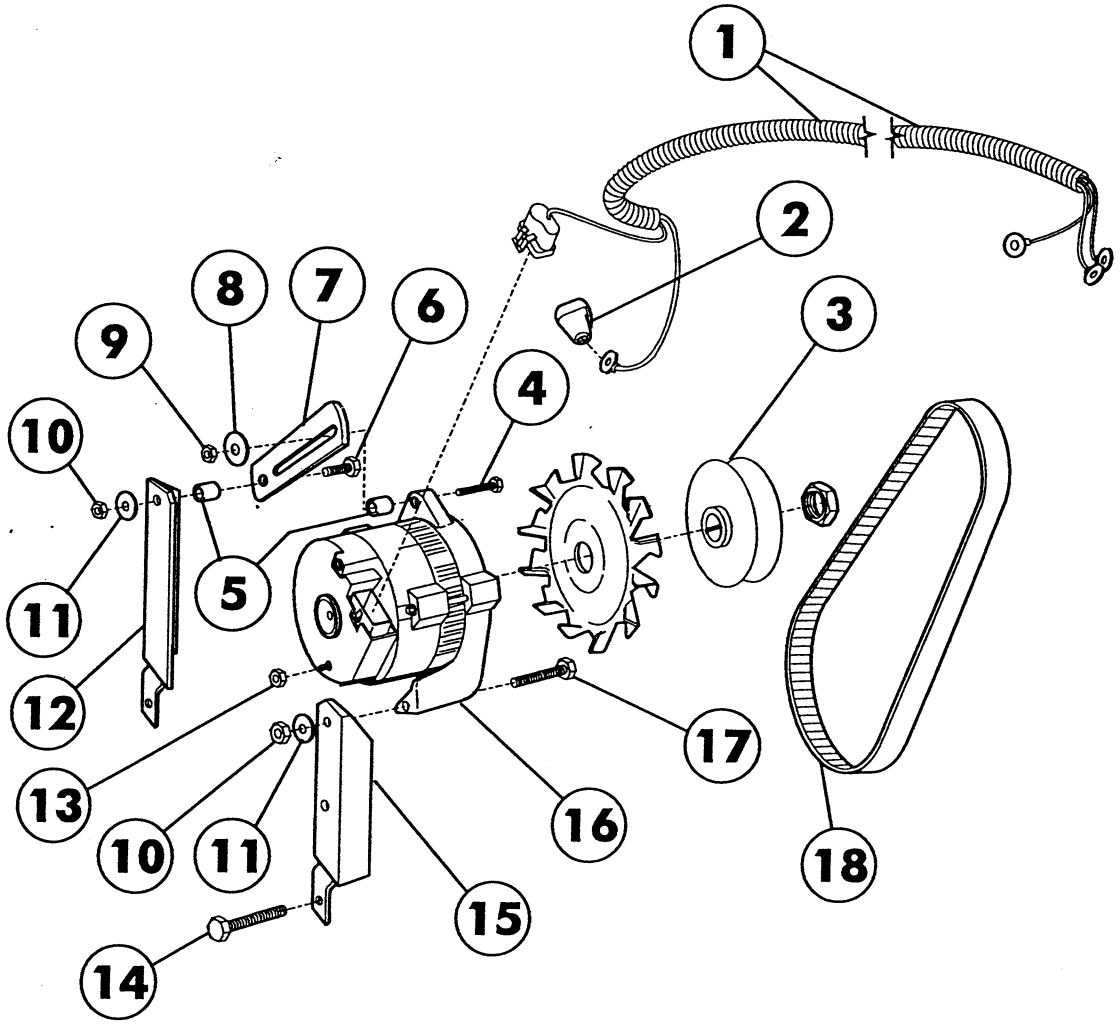

ALTERNATOR

Ref	Part No.	Description	Qty
1	92-8376	Alternator Harness	1
2	93-0829	Protective Cap	1
3	92-3999	Pulley	1
4	20-30-AD	Hex Hd Cap Screw 5/16 x 2" UNC	1
5	92-8567	Spacer Tube	2
6	20-49-AGD	Hex Hd Cap Screw 3/8 x 1-1/2"	1
7	92-8386	Alternator Adj. Strap	1
8	356303	Flatwasher, 5/16"	1
9	22-12-AJD	Hex Nut, 5/16"	1

Ref	Part No.	Description	Qty
10	22-13-AJD	Hex Nut, 3/8"	2
11	23-11-GD	Lockwasher, 3/8"	2
12	92-8390	Adjustment Pivot Assembly	1
13	43-2830	Hex Nut, 6MM	1
14	20-70-AGD	Hex Hd Cap Screw 7/16 x 2"	1
15	92-8387	Alternator Mount Assembly	1
16	92-3998	Alternator	1
17	20-54-AGD	Hex Hd Cap Screw 3/8 x 2-3/4"	1
18	92-3997	Alternator Belt	1

INJECTION PUMP MOTOR (93-0766)

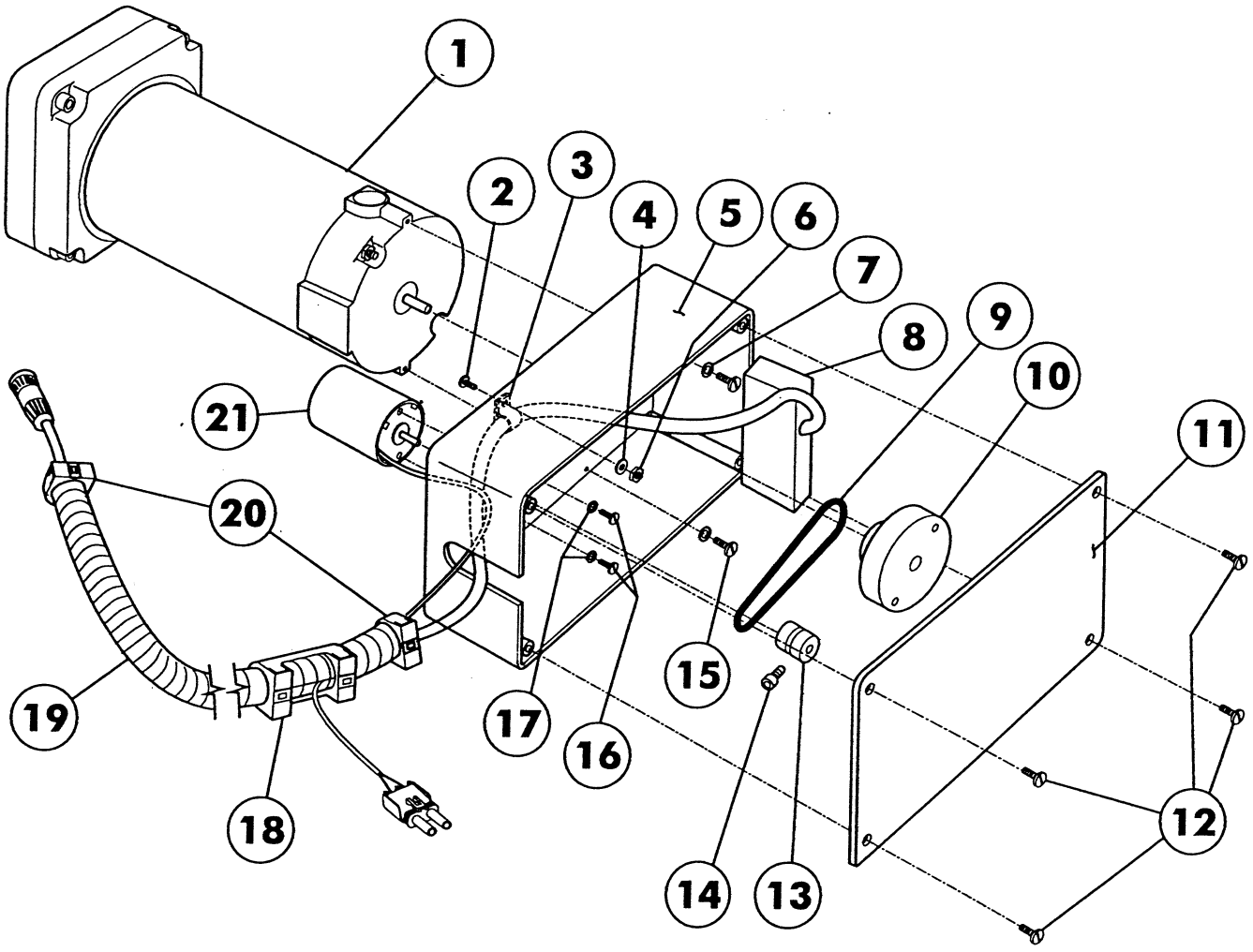

INJECTION PUMP MOTOR (93-0766)

Ref	Part No.	Description	Qty
1	93-1065	Gear Motor Assembly	1
2	93-1067	Pan Head Screw	1
3	93-1070	Cable Clamp	1
4	93-1068	Flat Washer	1
5	93-1064	Enclosure	1
6	93-1069	Hex Nut	1
7	93-1060	Lock Washer	2
8	93-1062	Metering Sensor	1
9	93-1058	O-Ring	1
10	93-1061	Pulley Assembly	1

Ref	Part No.	Description	Qty
11	93-1056	Cover	1
12	93-1067	Pan Head Screw	1
13	93-1057	Pulley	1
14	93-1072	Hex Socket Hd. Screw	1
15	93-1059	Pan Head Screw	2
16	93-1073	Pan Head Screw	2
17	93-1071	Lock Washer	2
18	93-1055	Conduit Outlet	1
19	93-1054	Conduit	1
20	93-1053	Conduit Ring	2
21	93-1066	Motor	1

NOTES:

NOTES:

NOTES: