Form No. 3394-876 Rev E

TORO®

Count on it.

Parts Catalog

Groundsmaster® 4010

Rotary Mower

Model No. 30636—Serial No. 315000001 and Up

Register at www.Toro.com.
Original Instructions (EN)

CE

3394-876 E

Ordering Replacement Parts

To order replacement parts, please supply the part number, the quantity, and the description of each part desired.

Understanding Reference Numbers

Each identified part in an illustration has a reference number. The reference number for a part also appears in the parts list, along with other information about the part.

This catalog uses two special reference number formats, one to indicate parts in a service assembly and another to indicate the quantity of a given part in an illustration.

Service Assembly Reference Numbers

Parts in service assemblies have reference numbers in the form a:b. The a represents the reference number of the entire service assembly and the b represents a sequential number unique to each part within the service assembly.

For example, a wheel assembly might be identified by reference number 6, the tire by 6:1, the valve by 6:2, and the wheel by 6:3. When you order the assembly identified by reference number 6, you receive all parts identified by reference numbers 6:1,6:2, and 6:3. However, you may also order any part individually. Reference numbers of this type appear in illustration and in parts lists.

Reference Numbers Indicating Quantity

In an illustration, if a reference number indicates more than one part, the reference number has the form nX y. The n represents the quantity of the part, the X is the multiplication symbol, and the y represents the reference number.

For example, in an illustration, the reference number 2X 37 means that two of the parts identified by reference number 37 are indicated.

Contents

Front Frame and Steering Assembly . . . 6
Planetary Assembly No. 105-4500 . . . 8
LH Brake Assembly No. 100-3070-03 . . . 9
RH Brake Assembly No. 100-3069-03 . . . 10
Battery, Rear Cover and Steer Valve Mount Assembly . . . 11
Wing Lift Arm Assembly . . . 12
Hydraulic Cylinder Assembly No. 107-4303 . . . 14
Impact Arm Assembly . . . 15
Frame, Bumper and Proximity Sensor Assembly . . . 17
Flywheel and Motor Mount Assembly . . . 18
Radiator and Fan Assembly . . . 19
Fan Mounting and Hardline Assembly . . . 21
Hydraulic Motor Assembly No. 117-4769 . . . 22
Engine and Controller Assembly . . . 23
Air Conditioner Compressor Mount Assembly . . . 24
Washer Fluid Bottle Assembly . . . 25
Rear Axle and Steering Cylinder Assembly . . . 26
Bevel Pinion Shaft Assembly Rear Axle Assembly No. 110-4750 . . . 28
Differential Assembly Rear Axle Assembly No. 110-4750 . . . 29
Axle Support Assembly Rear Axle Assembly No. 110-4750 . . . 30
Bevel Gear Case Assembly Rear Axle Assembly No. 110-4750 . . . 31
Bevel Gear Shaft Assembly Rear Axle Assembly No. 110-4750 . . . 32
Axle Case Assembly Rear Axle Assembly No. 110-4750 . . . 33
Axle Assembly Rear Axle Assembly No. 110-4750 . . . 34
Hydraulic Motor Assembly No. 120-8814 . . . 35
Steering Cylinder Assembly No. 121-1534 . . . 36
Hydraulic Fitting Assembly . . . 37
Hose and Tube Routing Assembly . . . 38
Fuel Tank and Air Cleaner Assembly . . . 39
Air Cleaner Assembly No. 99-5410 . . . 40
Hood Assembly . . . 41
Fuel/Water Separator Assembly . . . 42
Front Deck Installation Assembly . . . 43
Hydraulic Motor Assembly No. 127-3694 . . . 45
Lift Cylinder Assembly No. 120-8802 . . . 46
Front Deck Hydraulic Fitting Assembly . . . 47
Front Deck Hose Routing Assembly . . . 48
Right Deck Mount Assembly . . . 49
Left Deck Hydraulic Fitting Assembly . . . 50
Left Deck Hose Assembly . . . 51
Left Deck Mount Assembly . . . 52
Left Deck Hydraulic Fitting Assembly . . . 53
Left Deck Hose Assembly . . . 54
Traction Pedal and Platform Assembly . . . 55
Brake Pedal Assembly . . . 57
Seat Base and Seat Assembly . . . 58
Cloth Premium Seat Assembly No. 117-9429 . . . 59
Air Ride Seat Suspension Assembly No. 108-1488 . . . 60
Parking Brake, Steering Tower and Power Center Assembly . . . 62
Fender, Tool Box and Cover Assembly . . . 63
Fender Assembly . . . 64
Acoustic Foam Assembly . . . 65
Platform Harness and Fuse Assembly . . . 66
Rear Wire Harness Assembly . . . 67

© 2024—The Toro® Company

8111 Lyndale Avenue South
Bloomington, MN 55420

Contact us at www.Toro.com.
Printed in the USA.

All Rights Reserved

Contents (continued)

Battery Cable and Ground Assembly . . . 68
Engine Harness Assembly . . . 69
Piston Pump and Gear Pump Assembly . . . 70
Piston Pump Assembly No. 120-9059 . . . 72
4-Section Gear Pump Assembly No. 120-8904 . . . 74
Combination Manifold Assembly . . . 75
Combination Manifold Assembly No. 127-3650 . . . 76
Manifold Block Assembly . . . 78
Left Power-Take-Off Manifold Assembly No. 121-1536 . . . 80
Rear Traction Manifold Assembly No. 121-1530 . . . 81
Center and Right Power-Take-Off Manifold Assembly No. 121-1537 . . . 82
Flow Divider Manifold Assembly No. 121-1550 . . . 83
Drive Motor, Steer Valve and Filter Head Assembly . . . 84
Hydraulic Motor Assembly No. 120-8812 . . . 85
Steering Valve Assembly No. 130-7949 . . . 86
Hydraulic Reservoir Assembly . . . 87
Lift, Steer and Fan Hydraulic Assembly . . . 88
Traction Hydraulic Assembly . . . 90
Oil Cooler Hydraulic Assembly . . . 92
Armrest Control Panel Assembly . . . 93
Cab Step, Pad and Flooring Assembly . . . 95
Deck Pad and Hardware Assembly . . . 96
Front Deck, Idler and Skid Assembly . . . 97
Double Driven Spindle Assembly No. 119-4548 . . . 98
High Driven Spindle Assembly No. 119-4549 . . . 99
Front Deck Caster Arm and Wheel Assembly . . . 100
Driving Spindle Assembly . . . 101
Driving Spindle Assembly No. 119-4547 . . . 102
Front Deck Chamber and Cover Assembly . . . 103
Right Deck, Idler and Skid Assembly . . . 104
Low Driven Spindle Assembly No. 119-4776 . . . 106
Right Hand and Left Hand Castor Arm and Wheel Assembly . . . 107
Deck Driving Spindle Assembly . . . 108
Right Deck Discharge Chamber and Cover Assembly . . . 109
Left Deck Discharge Chamber and Cover Assembly . . . 110
Left Deck Idler and Skid Assembly . . . 112
Frame Mount and Seal Assembly . . . 114
Headliner Assembly . . . 116
Window, Door and Striker Assembly . . . 118
RH Door Assembly . . . 120
LH Door Assembly . . . 121
Engine Hose Routing Assembly . . . 122
Interior Foam Assembly . . . 124
Mixing Box and Vent Hose Assembly . . . 125
Headliner Wire Harness and Control Assembly . . . 126
Mixing Box Mounting Bracket and Water Tray Assembly . . . 127
Blower Fan and Evaporator Core Assembly . . . 128
Heat/Air Conditioner Housing Assembly . . . 129
Air Diverter and Expansion Valve Assembly . . . 130
Air Diverter Assembly No. 121-8369 . . . 131
Cylinder Block Assembly . . . 132
Cylinder Head and Cover Assembly . . . 134
Gear Housing Assembly . . . 136
Suction Manifold Assembly . . . 137

Contents (continued)

Exhaust Manifold Assembly 138
Flywheel Housing and Oil Sump Assembly 139
Camshaft and Driving Gear Assembly 140
Turbine Assembly 141
Crankshaft and Piston Assembly 142
Lubrication and Oil System Assembly 143
Lubrication Oil Line Assembly 144
Cooling Water System Assembly 145
Fuel System Assembly 146
Fuel Injection Valve Assembly 147
Fuel Line Assembly 148
Starting Motor Assembly 149
Generator Assembly 150
Electric Parts Assembly 151
Diesel Particulate Filter Assembly 152
Gasket Set 154
Attachments and Accessories 156

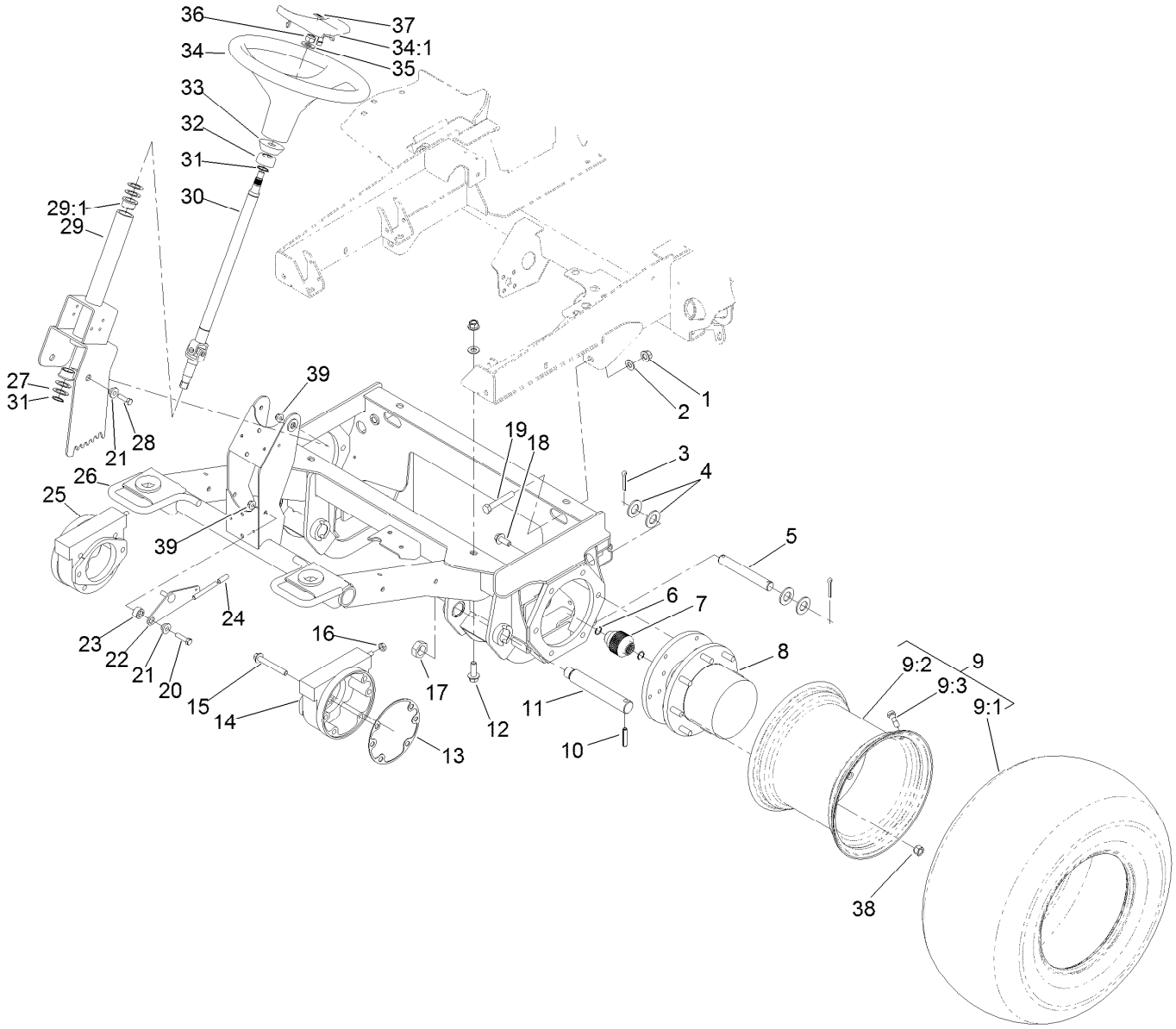

Front Frame and Steering Assembly

Ref.	Part Number	Qty.	Description
1	99-5107	6	Nut-Lock
2	3256-26	6	Washer-Flat
3	3272-30	4	Pin-Cotter
4	3256-29	8	Washer-Flat
5	110-6006	2	Pin-Clevis
6	93-7972	4	Ring-Retaining, Internal
7	100-3046	2	Shaft-Brake, Splined
8	105-4500	2	Planetary ASM
9		2	Wheel And Tire ASM ●
9:1	119-8313	1	Tire
9:2	120-4175	1	Rim
9:3	232-27	1	Stem-Valve
10	32121-110	2	Pin-Roll, Slotted
11	100-3017	2	*obs Pin-Lift Arm
12	100-6116	4	Screw-HHF
13	93-7984	2	Gasket
14	100-3070-03	1	Brake ASM
15	33106-090	8	Screw-HHF
16	3218-4	2	Nut-Jam
17	3296-49	2	Nut-Lock, NI
18	33106-030	12	Screw-HHF
19	325-13	2	Screw-HH
20	323-8	1	Screw-HH
21	93-5988	3	Hub-Pivot
22	114-5907-03	1	Lever-Tilt
23	114-4854	1	Spacer-Cup
24	93-5446	1	Cap-Vinyl
25	100-3069-03	1	Brake ASM
26	120-4085-03	1	Frame-Front
27	9547	4	Washer-Thrust
28	323-7	2	Screw-HH
29	114-0167	1	Steering Column ASM
29:1	256-132	2	Bushing-Flange
30	93-5428	1	Shaft-Steering
31	32151-29	2	Ring-Retaining
32	93-5439	1	Seal-Steering

● Not serviced separately

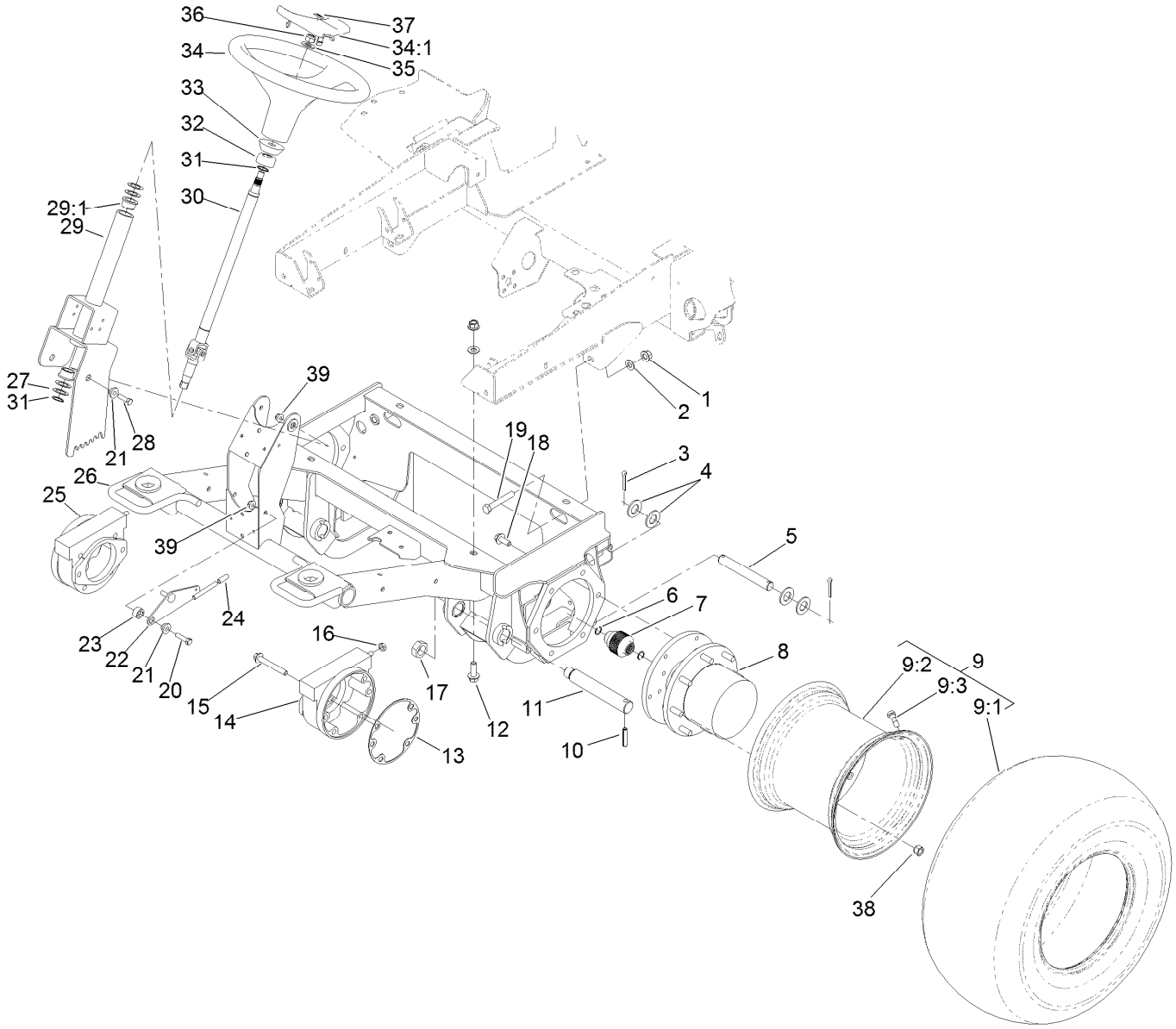

Front Frame and Steering Assembly (continued)

Ref.	Part Number	Qty.	Description
33	93-5429	1	Collar-Foam
34	98-1471	1	Wheel-Steering
34:1	98-1468	1	Cover-Wheel, Steering
35	3256-27	1	Washer-Flat

Ref.	Part Number	Qty.	Description
36	108-9342	1	Nut-Hex
37	98-1459	1	Decal
38	242-50	16	Nut-Lug
39	104-8301	3	Nut-HF, NI

● Not serviced separately

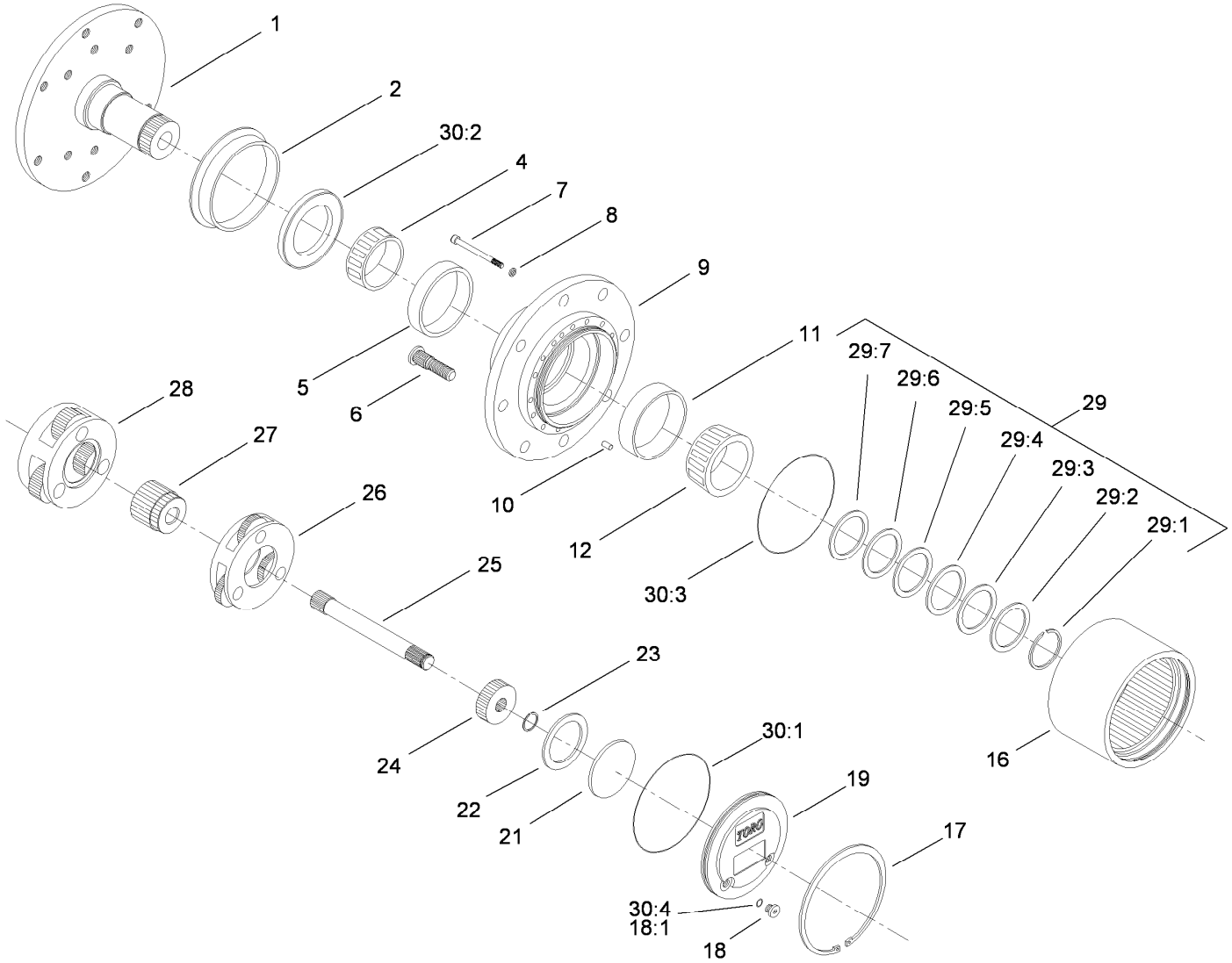

Planetary Assembly No. 105-4500

Ref.	Part Number	Qty.	Description
1		1	Spindle ■
2	105-8122	1	Seal-Boot
4	105-8120	1	Bearing-Cone
5	105-8119	1	Bearing-Cup
6	105-8124	8	Stud-Wheel
7	105-8125	16	Bolt-Head, Socket
8	3253-18	16	Washer-Lock
9		1	Housing ■
10	105-8121	1	Pin-Dowel
11	105-8117	1	Bearing-Cup
12	105-8118	1	Bearing-Cone
16	105-8113	1	Gear-Ring
17	105-8132	1	Ring-Retaining
18	353-990	2	Plug ASM
18:1	237-78	1	O-Ring
19	105-8138	1	Cap-End
21	105-8133	1	Plug-Thrust
22	105-8123	1	Washer-Thrust
23	105-8131	1	Ring-Retaining

● Not illustrated

Ref.	Part Number	Qty.	Description
24	105-8114	1	Gear-Primary
25	105-8115	1	Shaft-Drive
26	105-8129	1	Carrier-Primary
27	105-8139	1	Gear-Secondary
28	105-8130	1	Carrier-Secondary
29	105-8136	1	Shim Kit
29:1		1	Ring-Snap ■
29:2		1	Shim-Bearing, 2.9Mm ■
29:3		1	Shim-Bearing, 2.8Mm ■
29:4		1	Shim-Bearing, 2.7Mm ■
29:5		1	Shim-Bearing, 2.6Mm ■
29:6		1	Shim-Bearing, 2.5Mm ■
29:7		1	Shim-Bearing, 2.4Mm ■
30	105-8137	1	Seal Kit ●
30:1		1	O Ring-Flange Cap ■
30:2		1	Seal-Oil ■
30:3		2	O Ring-End Cap ■
30:4	237-78	2	O-Ring

■ Not serviced separately

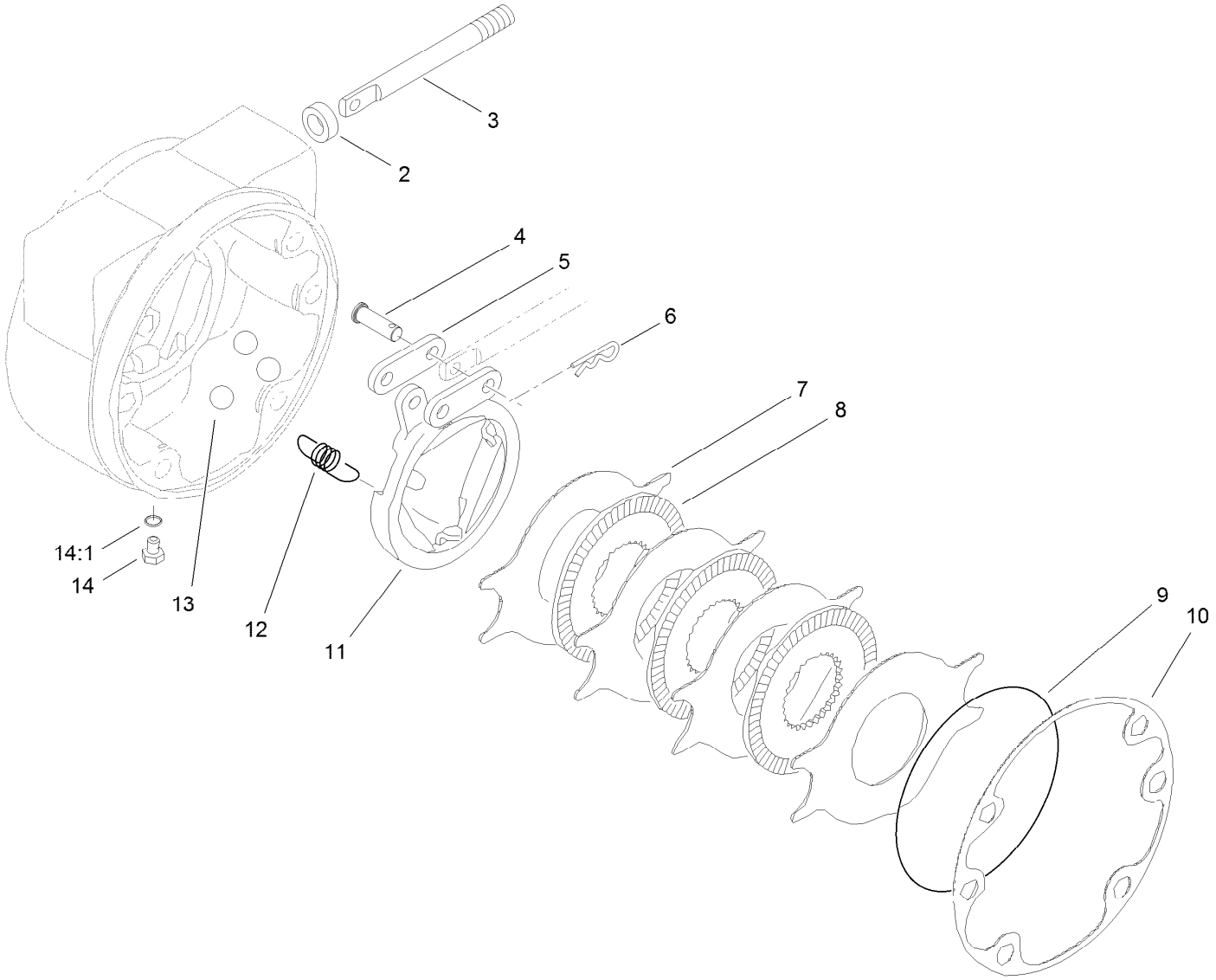

LH Brake Assembly No. 100-3070-03

Ref.	*Part Number*	*Qty.*	*Description*
2	93-7977	1	Seal
3	93-7978	1	Rod-Pull
4	93-7983	2	Pin-Clevis
5	93-7980	2	Link
6	93-7979	2	Pin-Hitch
7	93-7986	4	Disc-Stationary
8	104-4278	3	Disc-Rotating
9	93-7976	1	Ring-Retaining
10	93-7984	1	Gasket
11	104-4279	1	Actuator-Rotating
12	93-7987	3	Spring-Extension
13	93-7985	3	Ball
14	353-990	2	Plug ASM
14:1	237-78	1	O-Ring

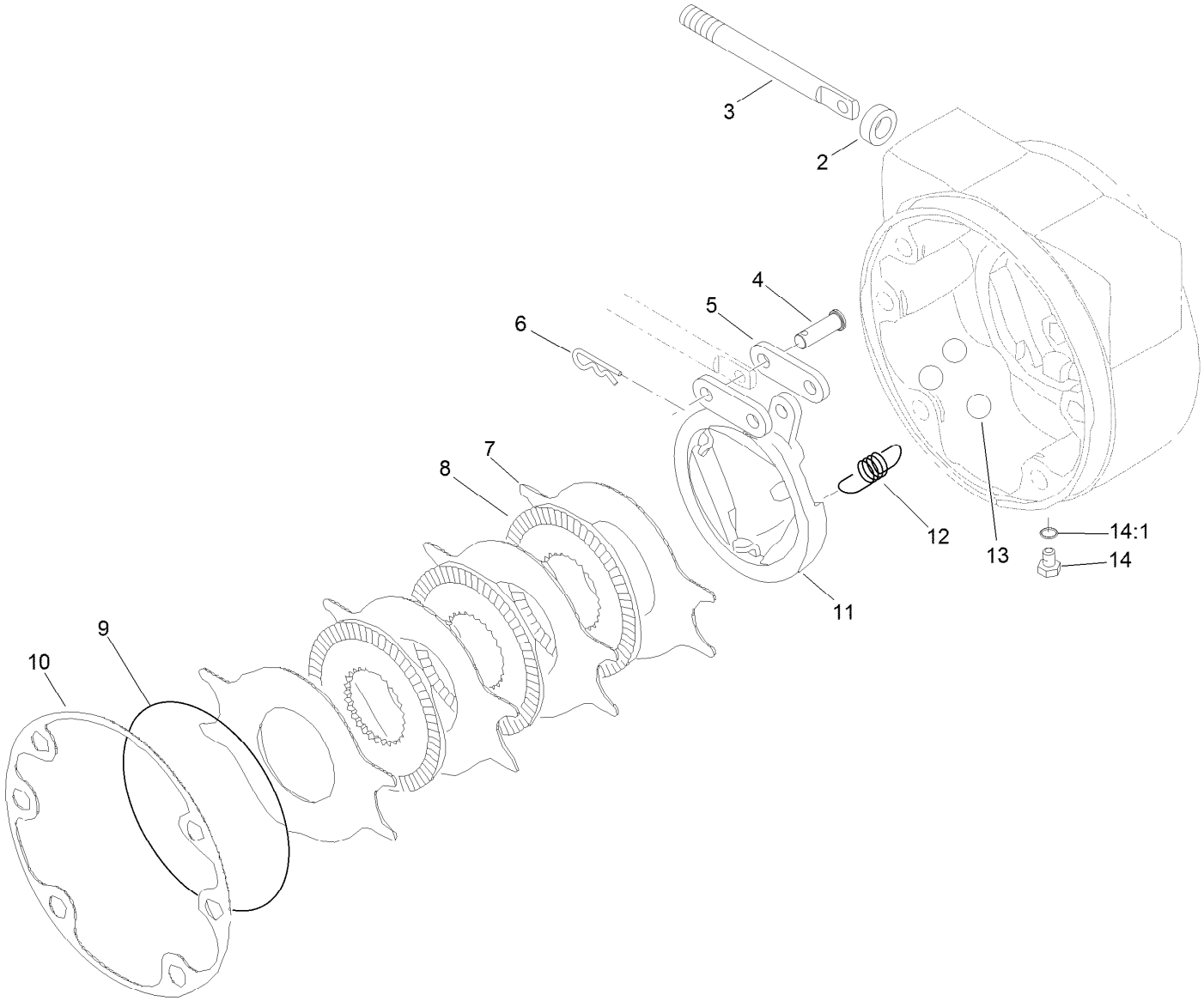

RH Brake Assembly No. 100-3069-03

Ref.	*Part Number*	*Qty.*	*Description*
2	93-7977	1	Seal
3	93-7978	1	Rod-Pull
4	93-7983	2	Pin-Clevis
5	93-7980	2	Link
6	93-7979	2	Pin-Hitch
7	93-7986	4	Disc-Stationary
8	104-4278	3	Disc-Rotating
9	93-7976	1	Ring-Retaining
10	93-7984	1	Gasket
11	104-4280	1	Actuator-Rotating
12	93-7987	3	Spring-Extension
13	93-7985	3	Ball
14	353-990	2	Plug ASM
14:1	237-78	1	O-Ring

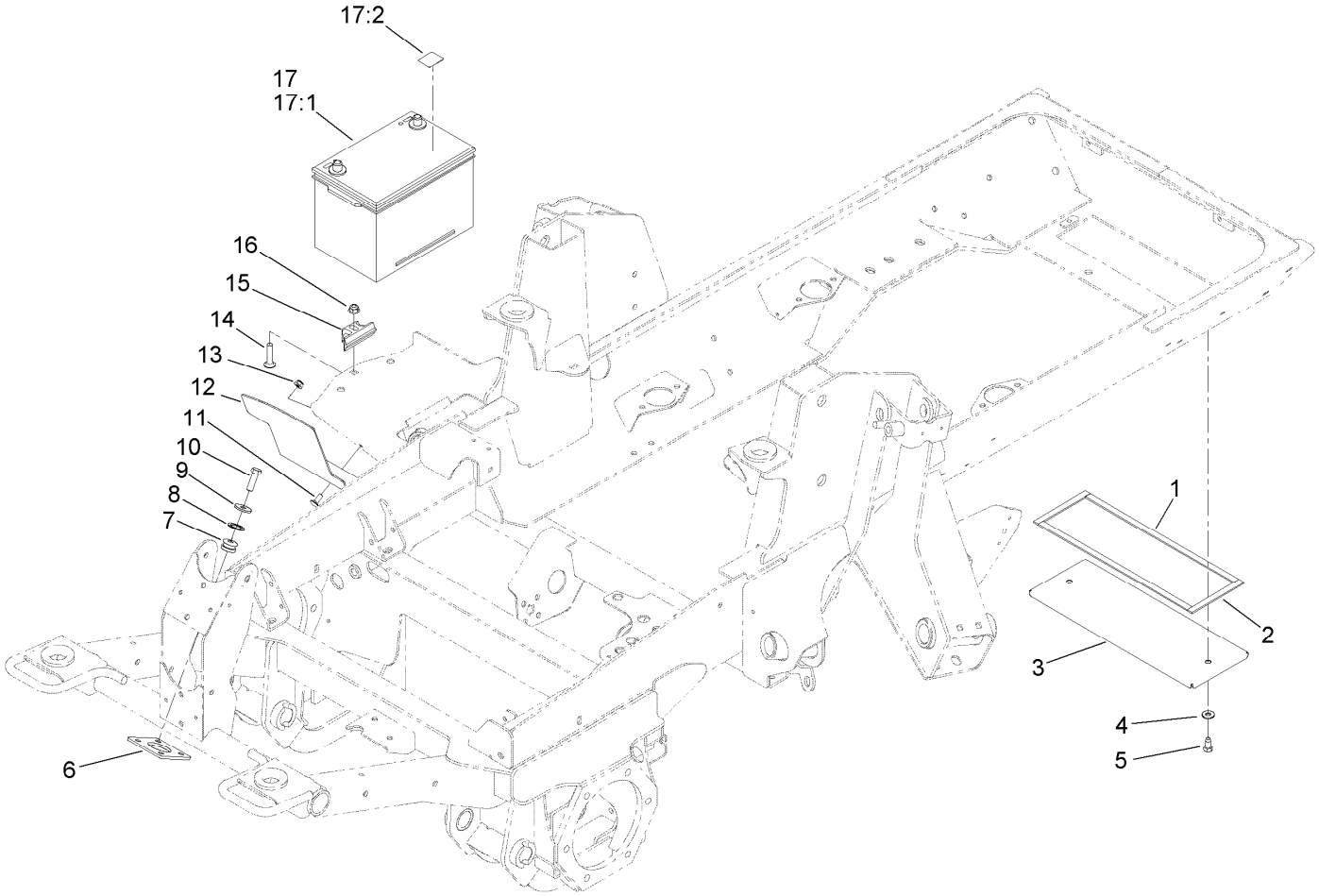

Battery, Rear Cover and Steer Valve Mount Assembly

Ref.	Part Number	Qty.	Description
1	105-0777	2	Strip-Foam
2	105-0778	2	Strip-Foam
3	104-2287-03	1	Cover-Frame
4	3256-3	2	Washer-Flat
5	32104-6	2	Screw-HH, TAP
6	120-4118-03	1	Plate-Mounting, Valve
7	63-9750	4	Mount
8	1-303352	4	Washer-Spindle
9	63-8410	4	Washer
10	33115-035	4	Screw-HH

Ref.	Part Number	Qty.	Description
11	3230-23	2	Bolt-CARR
12	121-1512-03	1	Shield-Battery
13	104-8300	2	Nut-HF, NI
14	3231-5	1	Screw-CARR
15	138-6335	1	Retainer-Battery
16	104-8301	1	Nut-HF, NI
17	139-1005	1	Battery Kit
17:1	127-7507	1	Battery
17:2	139-1006	1	Decal

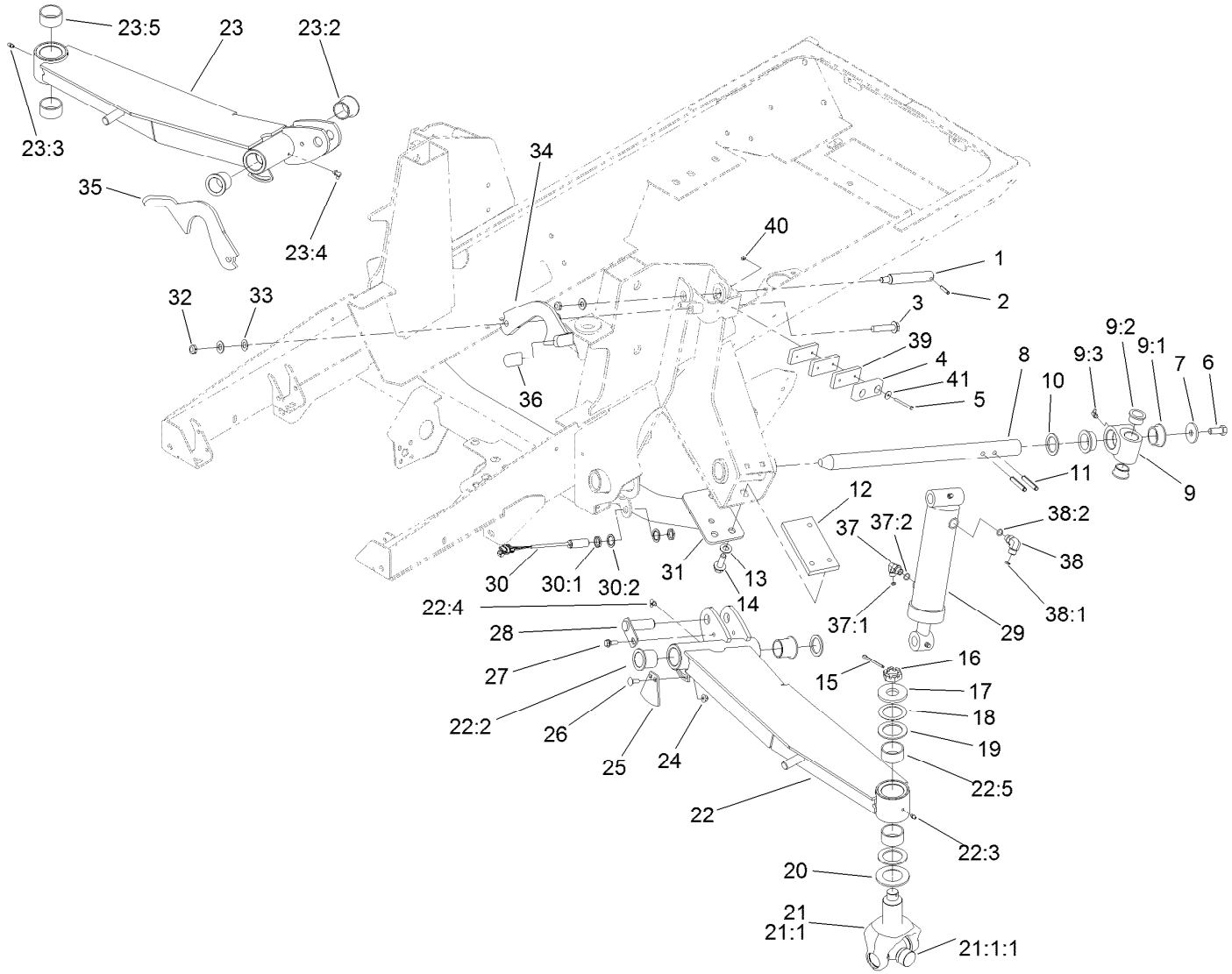

Wing Lift Arm Assembly

Ref.	Part Number	Qty.	Description
1	104-3537	2	Pin-Cylinder
2	32121-9	2	Pin-Roll, Slotted
3	3234-46	2	Screw-HHF
4	86-5350	2	Bumper-Rubber
5	32105-20	4	Screw-HH
6	325-5	2	Screw-HH
7	106-2008	2	Washer-Thrust
8	121-3882	2	Shaft-Pivot, Lift Arm
9	115-5468	2	Pivot Hub ASM
9:1	115-5469	2	Bushing-Flange
9:2	114-5680	2	Bushing-Flange
9:3	302-60	1	Fitting-Grease
10	256-304	4	Washer-Thrust
11	117-5479	4	Pin-Spring
12	120-8859-03	2	Block-Tapped
13	3256-26	10	Washer-Flat
14	100-6116	6	Screw-HHF
15	3272-25	2	Pin-Cotter

Ref.	Part Number	Qty.	Description
16	99-3139	2	Nut-Slotted
17	104-0719	2	Washer-Hardened
18	114-5641	2	Washer-Thrust
19	104-0721	4	Washer-Thrust
20	104-0720	2	Spacer
21	114-5640-03	2	Joint Yoke ASM
21:1		1	Yoke-Joint ●
21:1:1	104-4299	1	Cross And Bearing Kit
22	119-0089	1	LH Lift Arm ASM
22:2	69-6470	2	Bushing-Caster
22:3	302-5	1	Fitting-Grease
22:4	302-60	1	Fitting-Grease
22:5	114-5596	2	Bushing-Straight
23	119-0087	1	RH Lift Arm ASM
23:2	69-6470	2	Bushing-Caster
23:3	302-5	1	Fitting-Grease
23:4	302-60	1	Fitting-Grease
23:5	114-5596	2	Bushing-Straight

● Not serviced separately

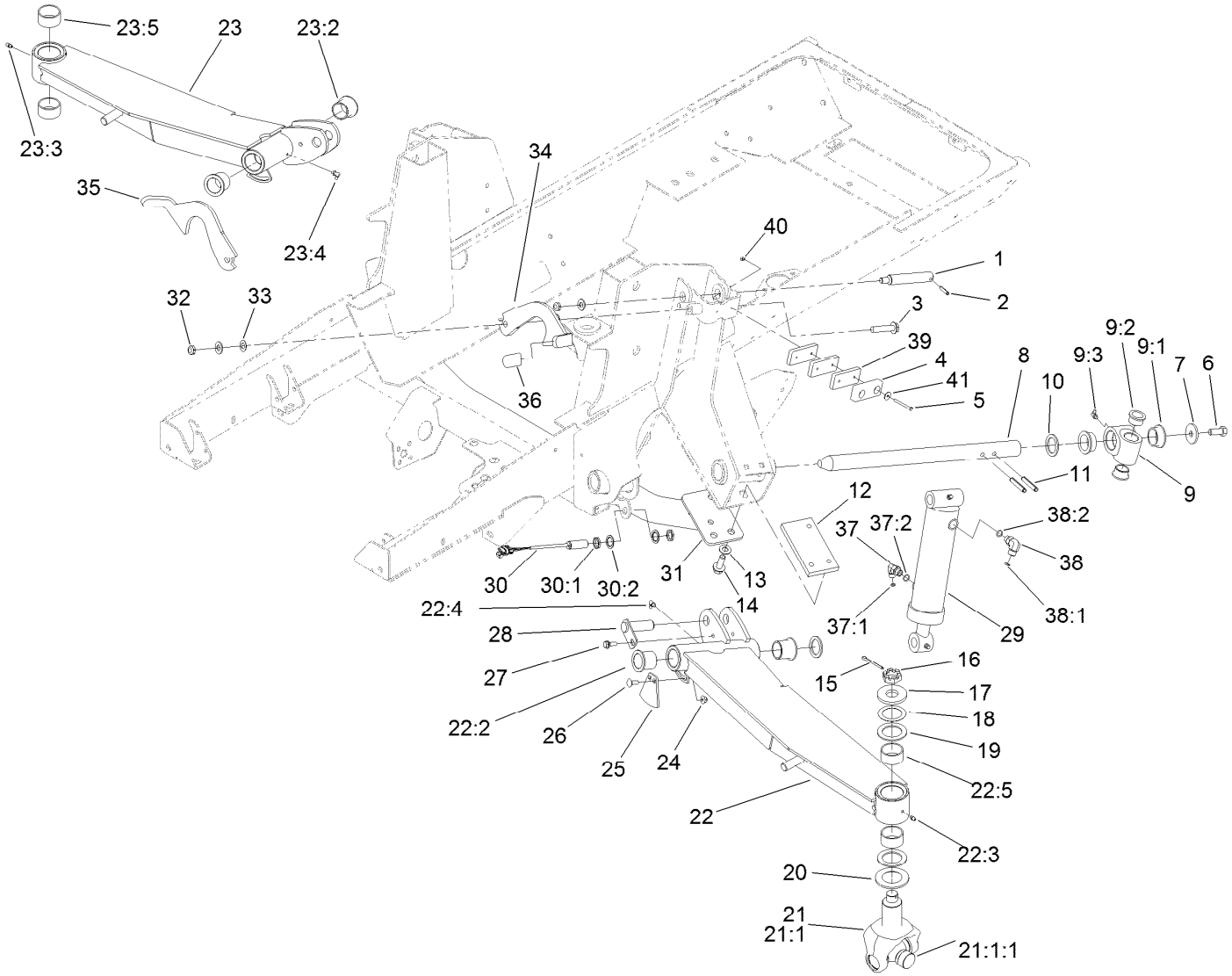

Wing Lift Arm Assembly (continued)

Ref.	Part Number	Qty.	Description
24	104-8300	6	Nut-HF, NI
25	119-0077	2	Plate-Sensing, Wing
26	3230-16	4	Screw-CARR
27	27-0410	2	Screw-Shoulder
28	100-5674	2	Pin
29	107-4303	2	HYD Cylinder ASM
30	115-5300	2	Proximity Switch ASM
30:1	117-3207	2	Nut-Hex
30:2	117-3208	2	Washer-Lock, Internal Tooth
31	120-9000-03	1	Crossmember
32	3296-45	4	Nut-Hex
33	104-3577	4	Washer

Ref.	Part Number	Qty.	Description
34	130-5640-03	1	Latch-Deck, LH
35	130-5641-03	1	Latch-Deck, RH
36	48-7081	2	Grip-Plastic
37	340-82	2	Fitting-Elbow, 90 DEG
37:1	237-42	1	O-Ring
37:2	237-21	1	O-Ring
38	340-77	2	Fitting-Elbow, 90 DEG
38:1	237-22	1	O-Ring
38:2	237-42	1	O-Ring
39	119-8308-03	6	Plate
40	3296-2	4	Nut-Lock, NI
41	3256-61	4	Washer-Flat

● Not serviced separately

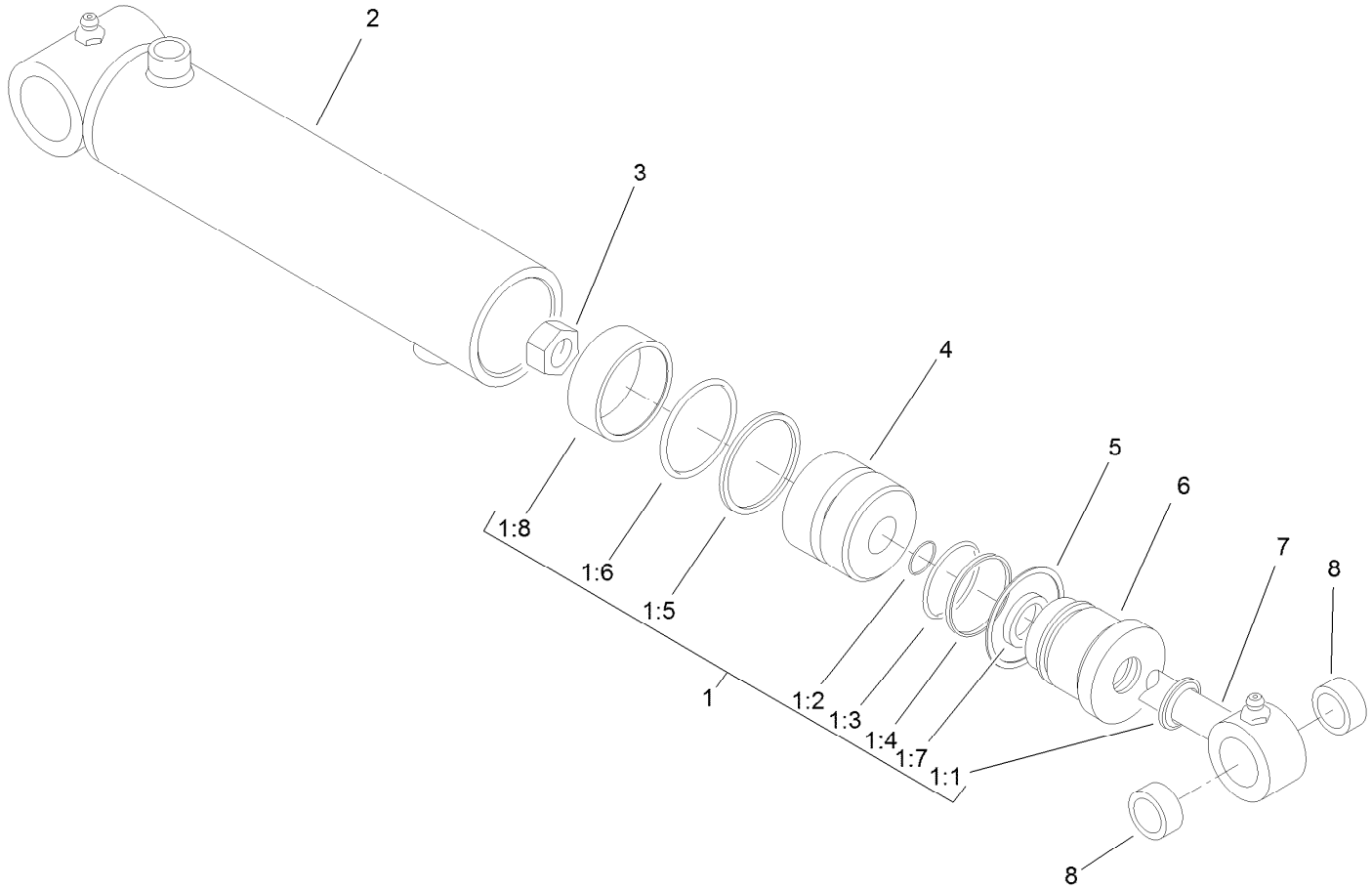

Hydraulic Cylinder Assembly No. 107-4303

Ref.	Part Number	Qty.	Description
1	107-0249	1	Seal Kit
1:1		1	Wiper ●
1:2		1	O-Ring ●
1:3		1	O-Ring ●
1:4		1	Back-Up ●
1:5		1	Seal ●
1:6		1	O-Ring ●
1:7		1	Seal ●

Ref.	Part Number	Qty.	Description
1:8		1	Wear Ring ●
2		1	Barrel ASM ●
3		1	Locknut ●
4		1	Piston ●
5		1	Ring, Retaining ●
6		1	Head ●
7		1	Rod ASM ●
8	104-4281	2	Bushing

● Not serviced separately

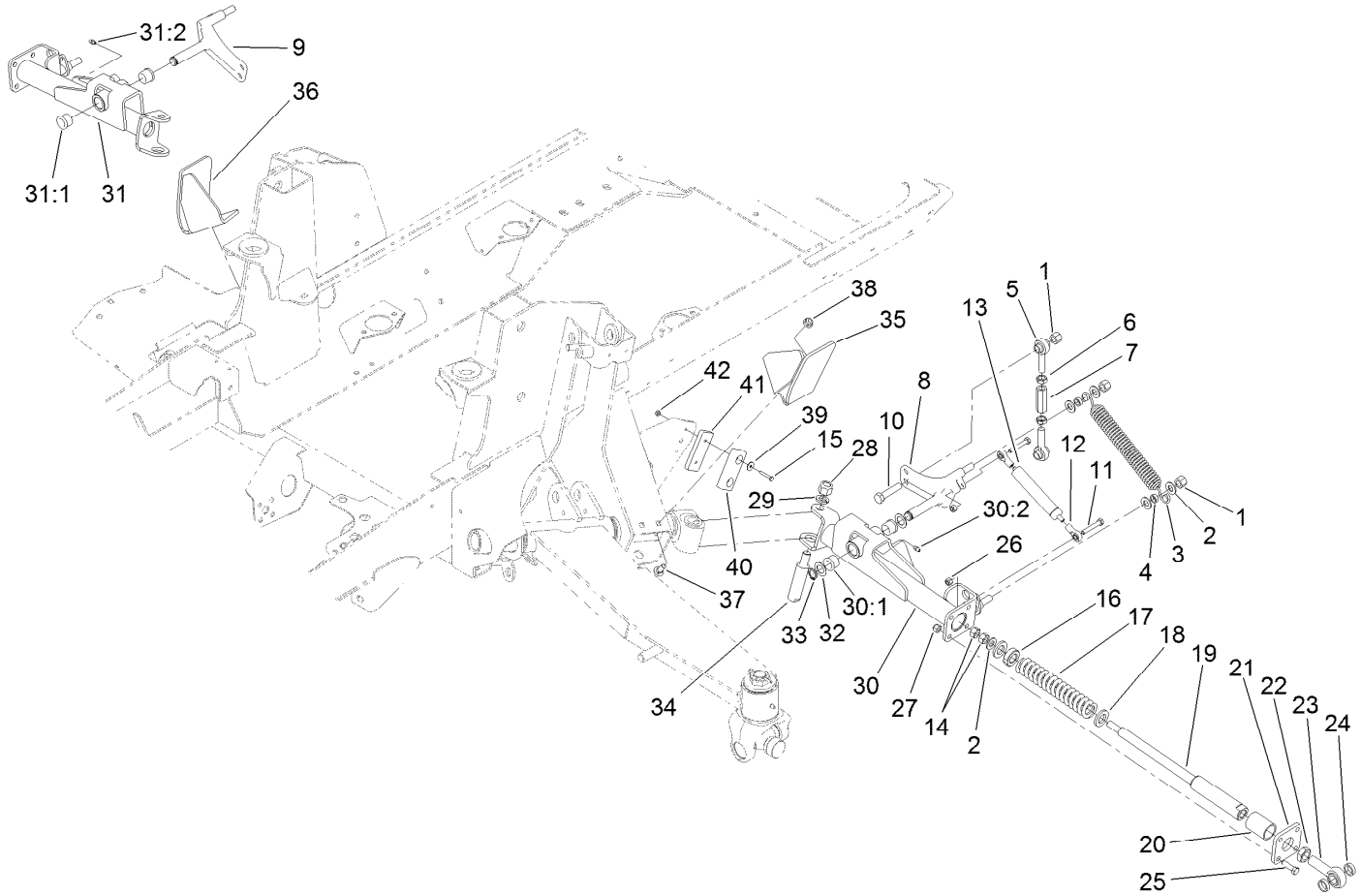

Impact Arm Assembly

Ref.	Part Number	Qty.	Description
1	3296-23	6	Nut-Lock, NI
2	3256-26	10	Washer-Flat
3	104-7520	2	Spring-Damper
4	104-7521	4	Bushing
5	105-2808	4	End-Rod
6	3220-5	4	Nut-Jam
7	105-2809	2	Tube-Link
8	114-2717	1	Crank-Bell, LH
9	114-2716	1	Crank-Bell, RH
10	325-9	2	Screw-HH
11	322-10	4	Screw-HH
12	104-8331	4	End-Rod, Spherical
13	105-3249	2	Damper
14	3217-9	4	Nut-HH
15	3290-360	4	Screw-HH
16	105-4552	2	Bearing-Plastic
17	100-8138	2	Spring-Compression
18	105-4551	4	Washer-Flat
19	105-4548	2	Shaft-Spring
20	105-4550	2	Bushing-Straight
21	105-2807-03	2	Plate

Ref.	Part Number	Qty.	Description
22	3220-7	2	Nut-Jam
23	105-2806	2	End-Rod
24	105-0756	4	Spacer
25	323-7	8	Screw-HH
26	3296-29	4	Nut-Lock, NI
27	3296-39	8	Nut-Lock, NI
28	3296-53	2	Nut-Lock, NI
29	3253-8	2	Washer-Lock
30	120-8884	1	LH Rear Arm ASM
30:1	256-113	2	Bushing-Flange
30:2	302-5	1	Fitting-Grease
31	120-8883	1	RH Rear Arm ASM
31:1	256-113	2	Bushing-Flange
31:2	302-5	1	Fitting-Grease
32	3-6498	4	Washer-Thrust
33	32120-93	2	Ring-Retaining
34	104-2281	2	Shaft-Pivot
35	120-8856-03	1	Bracket-Roller, LH
36	120-8874-03	1	Bracket-Roller, RH
37	3231-2	4	Bolt-CARR
38	104-8301	4	Nut-HF, NI

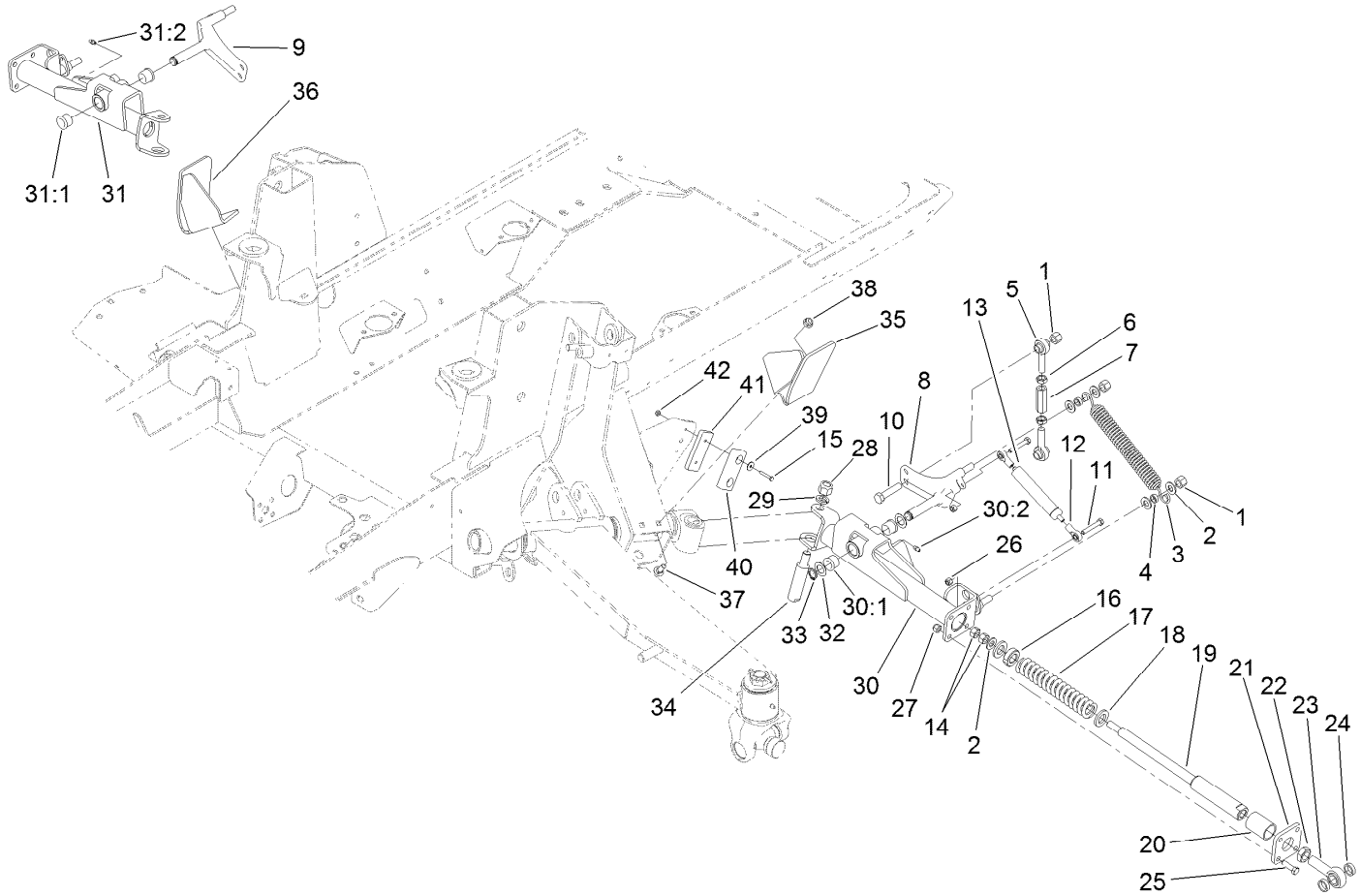

Impact Arm Assembly (continued)

Ref.	Part Number	Qty.	Description
39	3256-61	4	Washer-Flat
40	86-5350	2	Bumper-Rubber
41	119-8308-03	2	Plate
42	3296-2	4	Nut-Lock, NI

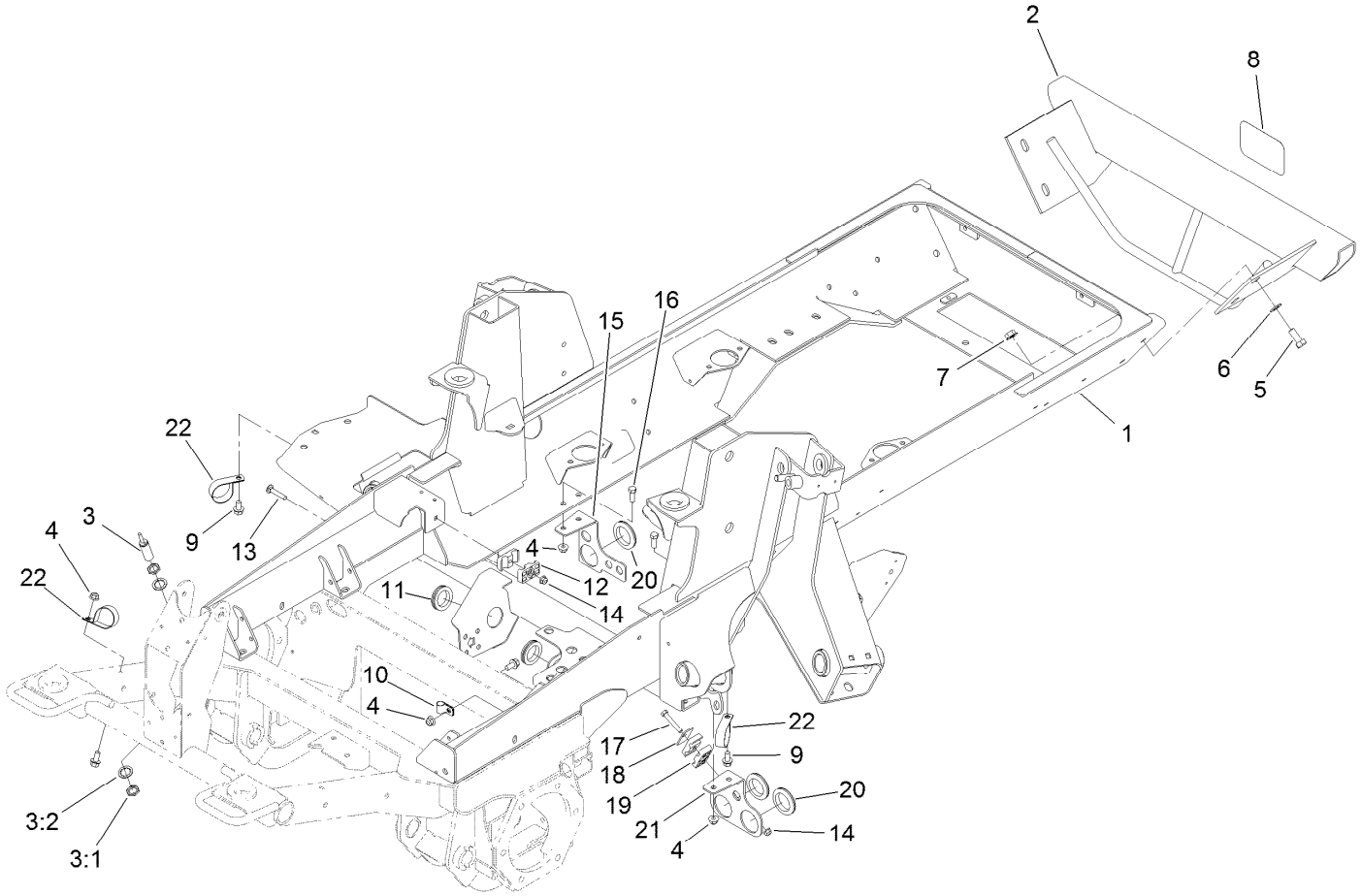

Frame, Bumper and Proximity Sensor Assembly

Ref.	Part Number	Qty.	Description
1	120-4010-03	1	Frame
2	120-8919-03	1	Bumper
3	115-0282	1	Proximity Sensor ASM
3:1	117-3207	2	Nut-Hex
3:2	117-3208	2	Washer-Lock, Internal Tooth
4	104-8301	6	Nut-HF, NI
5	325-5	4	Screw-HH
6	3256-26	4	Washer-Flat
7	32128-23	4	Nut-HF
8	105-8278	1	Decal
9	3234-1	4	Screw-HHF
10	2412-138	1	R-Clamp

Ref.	Part Number	Qty.	Description
11	240-7	2	Grommet-Rubber
12	56-7971	2	Clamp-Tube
13	3230-5	1	Bolt-CARR
14	104-8300	2	Nut-HF, NI
15	121-1508-03	1	Bracket-Bulkhead
16	323-6	4	Screw-HH
17	322-10	1	Screw-HH
18	69-9760	1	Plate-Cover
19	56-7976	2	Clamp-Tube
20	240-2	3	Grommet-Rubber
21	121-1481-03	1	Plate-Mount, Bulkhead (LH)
22	2412-147	3	Clamp-R

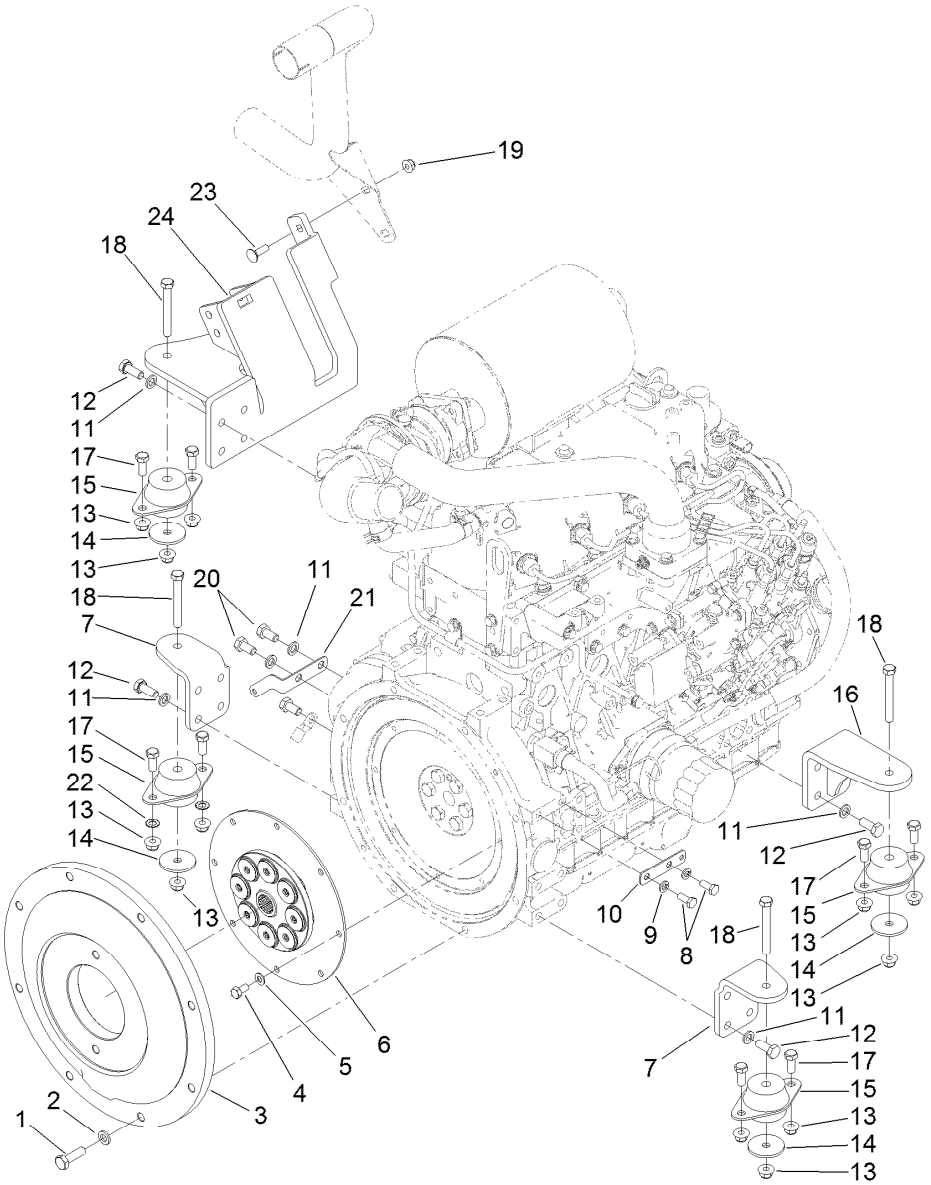

Flywheel and Motor Mount Assembly

Ref.	Part Number	Qty.	Description
1	117-5663	8	Screw-HH
2	107-1413	8	Washer-Hardened
3	115-6657-03	1	Plate-Flywheel
4	99-5132	8	Bolt
5	87-7510	8	Washer-Flat
6	120-4176	1	Coupling-Spring, Flywheel
7	120-4066-03	2	Mount-Motor, Front
8	33114-020	2	Screw-HH
9	3253-4	2	Washer-Lock
10	121-5636	1	Tab-Harness
11	48-9590	18	Washer-Lock
12	33115-025	16	Screw-HH

Ref.	Part Number	Qty.	Description
13	104-8301	12	Nut-HF, NI
14	63-7400	4	Washer-Rebound
15	53-9682	4	Mount-Engine
16	120-4068-03	1	Mount-Motor
17	323-5	8	Screw-HH
18	323-14	4	Screw-HH
19	104-8300	2	Nut-HF, NI
20	33115-020	3	Screw-HH
21	121-6580	1	Bracket-Harness
22	3255-9	2	Washer-Lock
23	3230-2	2	Bolt-CARR
24	127-3722-03	1	Mount-Motor

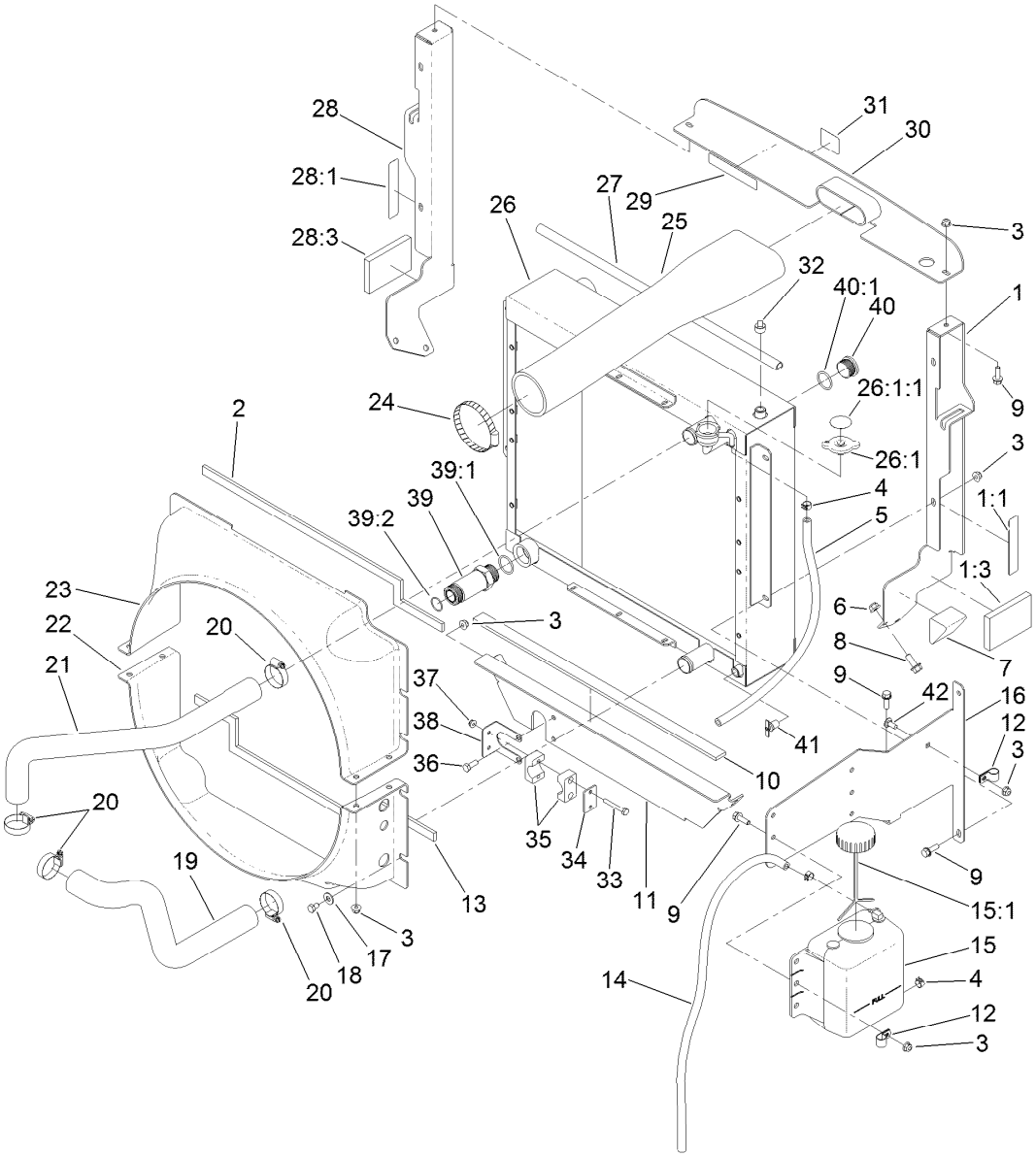

Radiator and Fan Assembly

Ref.	Part Number	Qty.	Description
1	121-1479	1	LH Radiator Support ASM
1:1	93-7272	1	Decal-Warning
1:3	100-2196	1	Pad-Foam
2	121-1684	1	Foam-Radiator
3	104-8300	13	Nut-HF, NI
4	92-2379	3	Clamp-Hose
5	110-4112	1	Hose-Fuel
6	104-8301	6	Nut-HF, NI
7	93-5954	2	Plug-Foam
8	3234-11	6	Screw-HHF
9	3234-29	12	Screw-HHF
10	104-2226	1	Strip-Foam
11	120-8968-03	1	Bracket-Hose
12	92-6064	2	Clamp-R
13	121-1685	1	Foam-Radiator, Lower
14	110-9662	1	Hose-Fuel
15	120-5571	1	Coolant Reservoir ASM
15:1	87-7050	1	Cap-Reservoir
16	130-0603-03	1	Bracket-Mount, Bottle
17	3256-3	8	Washer-Flat
18	322-1	8	Screw-HH

Ref.	Part Number	Qty.	Description
19	121-1746	1	Hose-Radiator, Lower
20	2412-111	4	Clamp-Hose, W/Liner
21	121-1747	1	Hose-Radiator, Upper
22	121-1517	1	Shroud-Radiator, Lower
23	121-1515	1	Shroud-Radiator, Upper
24	2412-110	1	Clamp-Band/Screw
25	121-1474	1	Hose-Inlet, Air Cleaner
26	121-3080	1	Radiator/Oil Cooler
26:1	115-7766	1	Cap-Radiator
26:1:1	106-6755	1	Decal-Cap, Radiator
27	114-3828	1	Seal-Bulb
28	121-1478	1	RH Radiator Support ASM
28:1	93-7272	1	Decal-Warning
28:3	100-2196	1	Pad-Foam
29	93-7272	1	Decal-Warning
30	120-9025-03	1	Bracket-Intake
31	93-7275	1	Decal-Fluid, Starting
32	281-13	1	Plug-Pipe
33	321-11	2	Screw-HH
34	114-4902	1	Plate-Cover
35	114-4901	1	Clamp

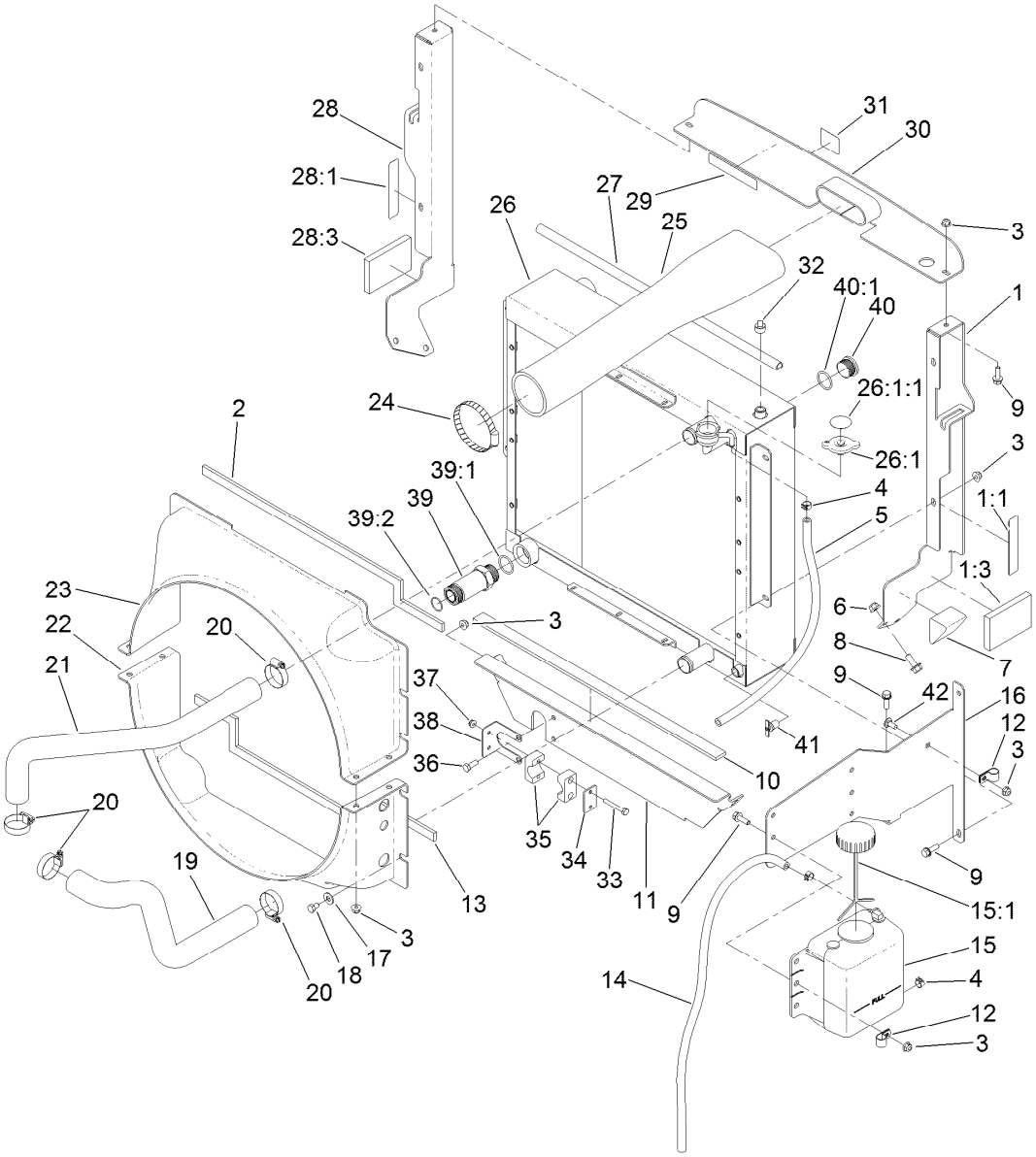

Radiator and Fan Assembly (continued)

Ref.	Part Number	Qty.	Description
36	322-4	2	Screw-HH
37	104-7201	2	Nut-HF, NI
38	120-8984	1	Bracket-Clamp
39	100-5565	1	Fitting-STR
39:1	237-146	1	O-Ring

Ref.	Part Number	Qty.	Description
39:2	340-65	1	O-Ring
40	106-2030	1	Plug-Hex, Hollow
40:1	237-146	1	O-Ring
41	304-46	1	Draincock
42	3230-23	1	Bolt-CARR

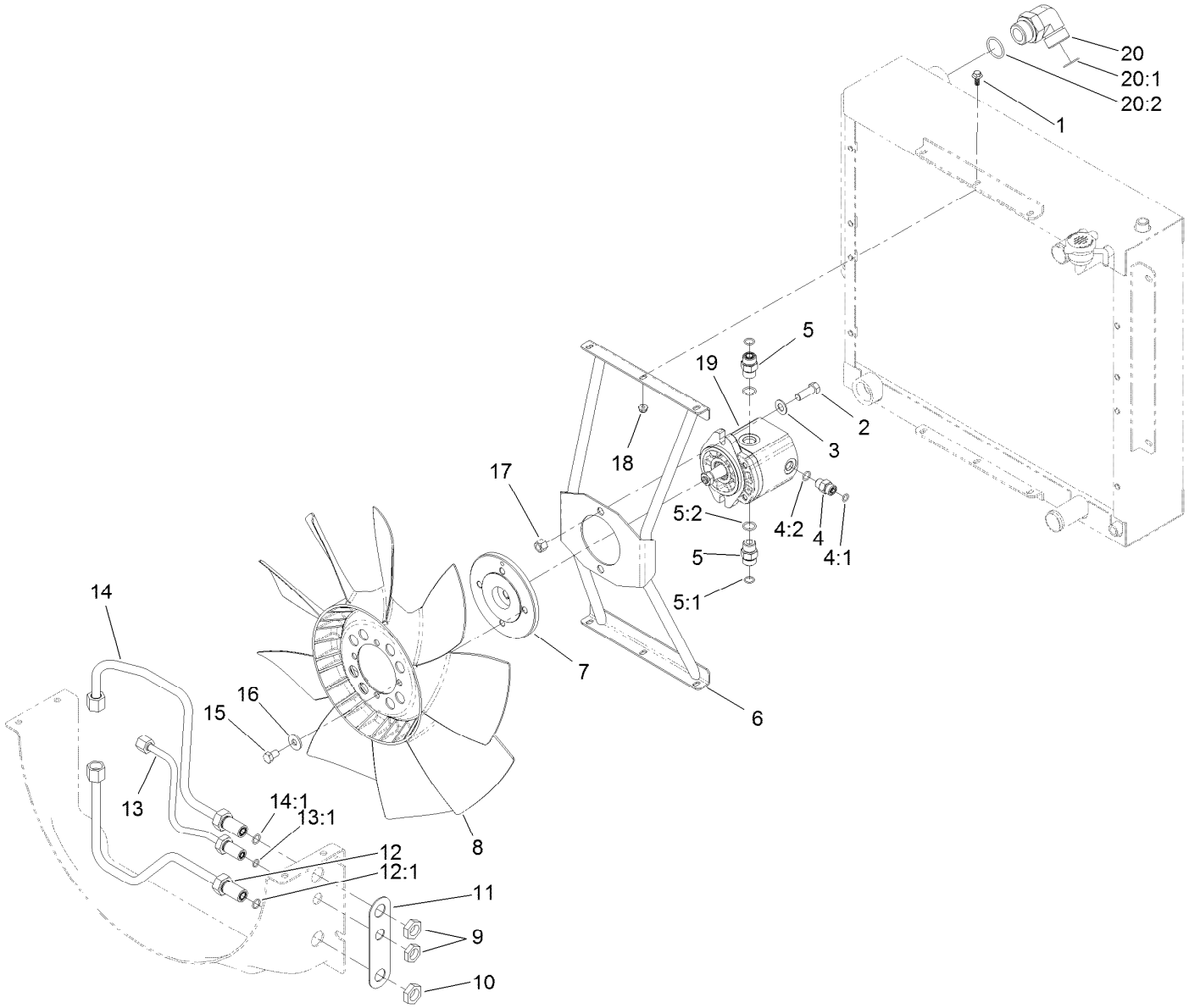

Fan Mounting and Hardline Assembly

Ref.	Part Number	Qty.	Description
1	99-6810	6	Screw-HHF
2	324-5	2	Screw-HH
3	3256-25	2	Washer-Flat
4	340-2	1	Fitting-Straight
4:1	237-22	1	O-Ring
4:2	237-42	1	O-Ring
5	340-4	2	Fitting-Straight
5:1	237-30	1	O-Ring
5:2	237-79	1	O-Ring
6	120-8935-03	1	Bracket-Fan
7	117-2364	1	Hub-Fan
8	114-3825	1	Fan
9	340-70	1	Nut-Lock
10	340-127	2	Nut-Bulkhead
11	121-1518	1	Shim-Support

Ref.	Part Number	Qty.	Description
12	121-1554	1	Tube-HYD
12:1	237-30	1	O-Ring
13	121-1555	1	Tube ASM
13:1	237-22	1	O-Ring
14	121-1553	1	Tube-HYD
14:1	237-30	1	O-Ring
15	115-8486	4	Screw-HH
16	80-6990	4	Washer-Hardened
17	3296-48	2	Nut-Hex
18	104-7201	6	Nut-HF, NI
19	117-4769	1	HYD Motor ASM
20	340-129	1	Fitting-Elbow, 90 DEG
20:1	237-146	1	O-Ring
20:2	340-65	1	O-Ring

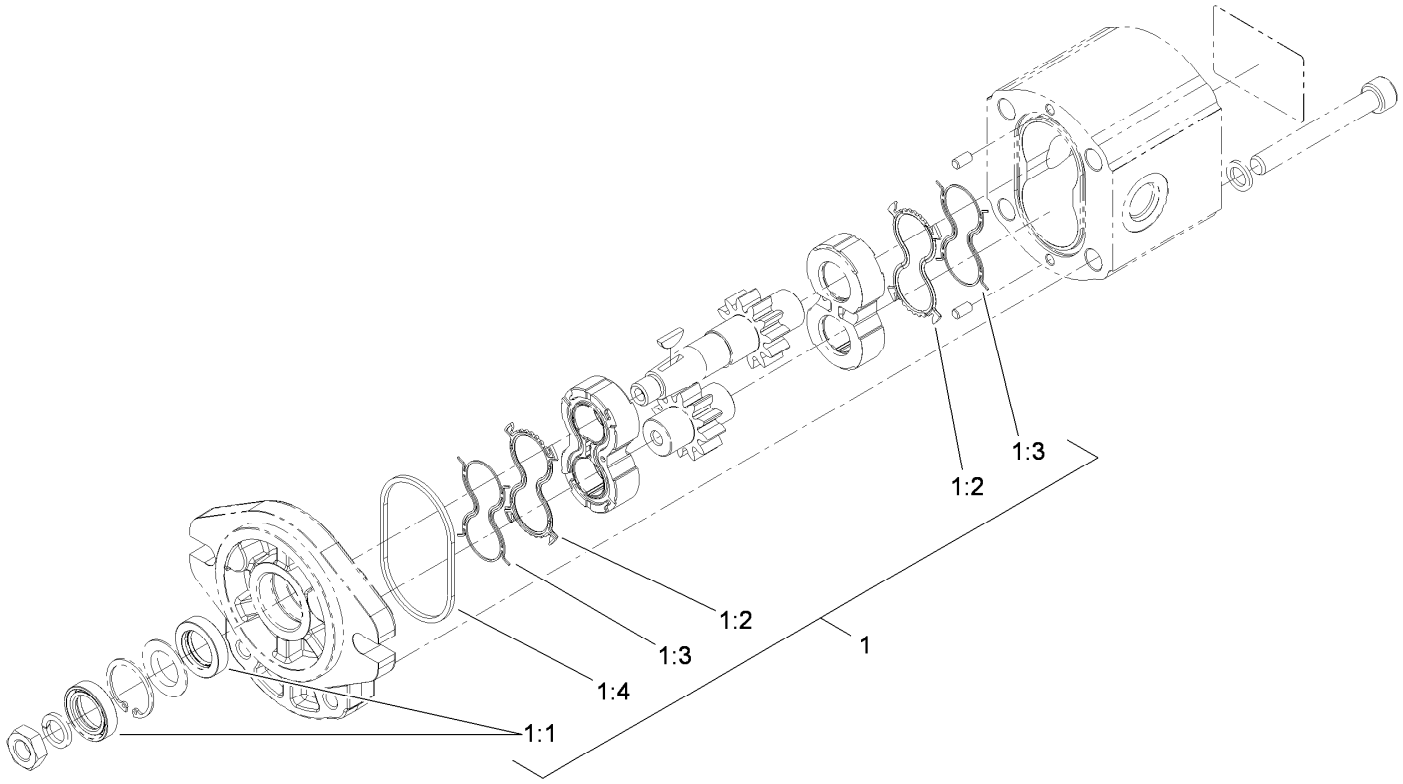

Hydraulic Motor Assembly No. 117-4769

Ref.	*Part Number*	*Qty.*	*Description*
1	115-4110	1	Seal Kit
1:1		2	Seal-Shaft ●
1:2		2	Seal-Plate, Balancing ●
1:3		2	Seal-Anti Extrusion ●
1:4		2	O-Ring (Housing) ●

● Not serviced separately

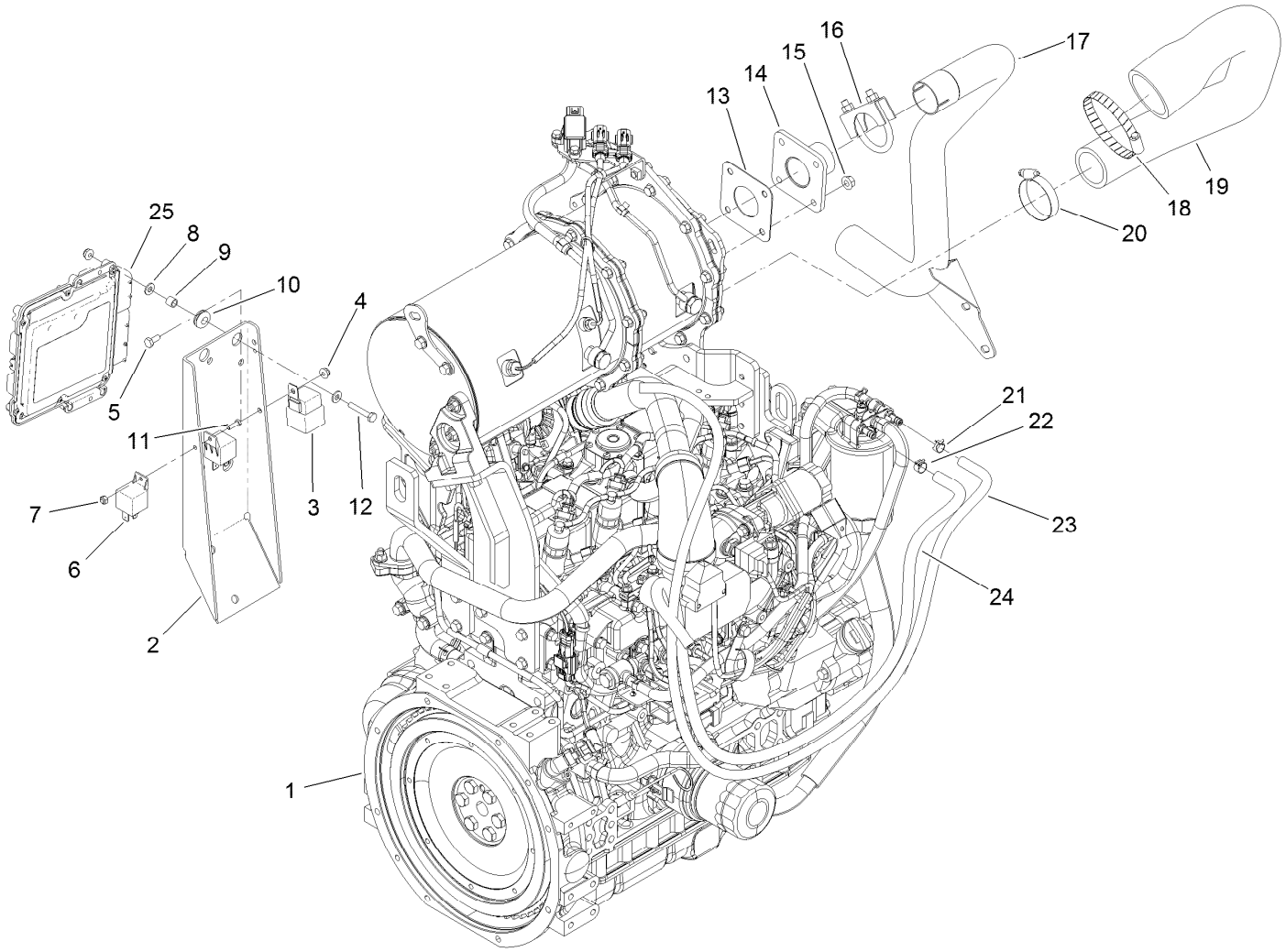

Engine and Controller Assembly

Ref.	Part Number	Qty.	Description
1	120-4111	1	Engine ASM
2	120-8916-03	1	Mount-Controller
3	99-7430	1	Relay-Mini
4	104-7201	5	Nut-HF, NI
5	321-3	1	Screw-HH
6	99-7435	2	Relay
7	3296-2	1	Nut-Lock, NI
8	3256-22	8	Washer-Flat
9	1-633545	4	Spacer
10	1-633630	4	Grommet
11	3290-134	1	Screw
12	321-9	4	Screw-HH
13	121-3058	1	Gasket-Exhaust

Ref.	Part Number	Qty.	Description
14	121-3060	1	Flange-Exhaust
15	33004-00	4	Nut-HF
16	18-2130	1	Clamp
17	121-1613	1	Pipe-Exhaust
18	2412-110	1	Clamp-Band/Screw
19	121-1475	1	Hose-Outlet, Air Cleaner
20	2412-130	1	Clamp-Hose
21	2412-98	1	Clamp-Hose
22	92-2379	1	Clamp-Hose
23	115-2368	1	Hose-Fuel
24	110-4007	1	Hose-Fuel
25	121-5592	1	Electronic Control Unit

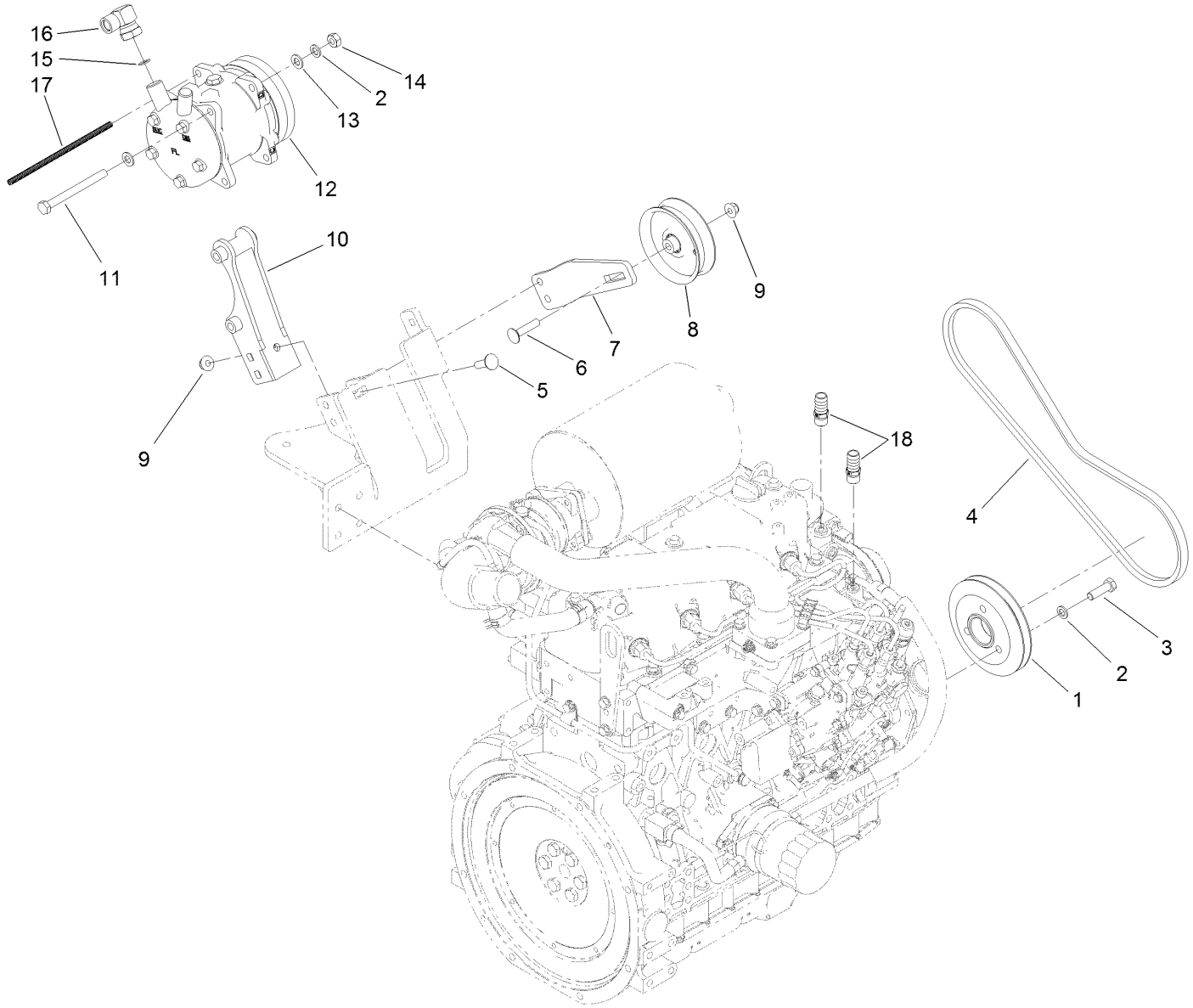

Air Conditioner Compressor Mount Assembly

Ref.	Part Number	Qty.	Description
1	121-8177	1	Pulley-Single
2	48-9590	5	Washer-Lock
3	33115-035	3	Screw-HH
4	110-6254	1	Belt-V
5	3231-25	5	Bolt-CARR
6	3231-5	1	Screw-CARR
7	127-3727-03	1	Mount-Pulley
8	98-3095	1	Pulley-Idler
9	104-8301	6	Nut-HF, NI

Ref.	Part Number	Qty.	Description
10	127-3726-03	1	Mount-Compressor
11	33115-110	2	Screw-HH
12	119-0103	1	Compressor
13	33095-00	4	Washer-Flat
14	33015-00	2	Nut-Hex
15	117-2780	1	O-Ring
16	119-0128	1	Fitting-Elbow, 90 DEG
17	115-8882	1	Conduit-Convoluted
18	117-9410	2	Fitting-Straight

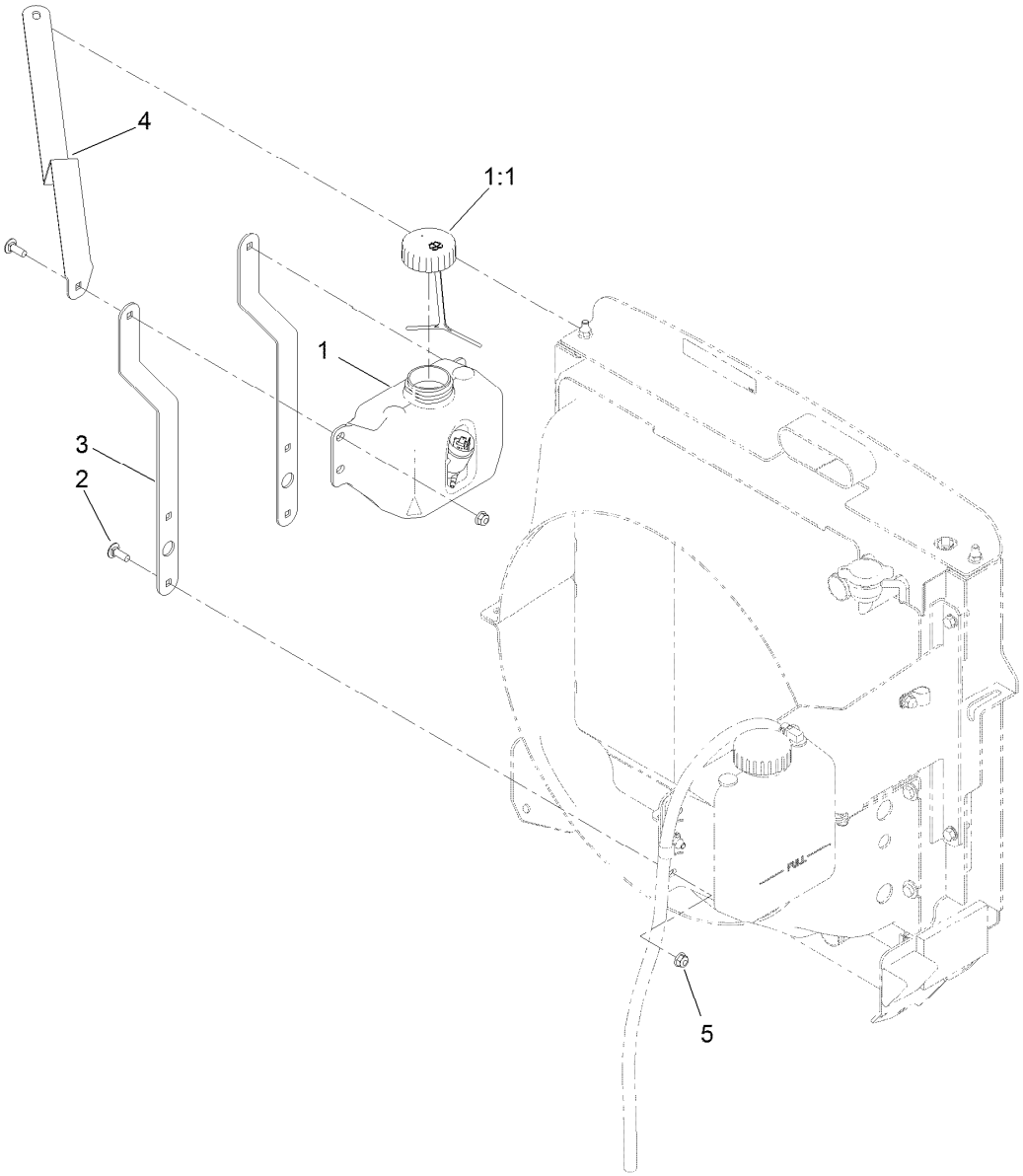

Washer Fluid Bottle Assembly

Ref.	*Part Number*	*Qty.*	*Description*
1	125-5257	1	Tank-Fluid, Washer
1:1	125-5258	1	Lid-Tank, Washer Fluid
2	3230-10	6	Bolt-CARR
3	130-0604-03	2	Strap-Bottle, Washer Fluid
4	130-0605-03	1	Support-Bottle, Washer Fluid
5	104-8300	6	Nut-HF, NI

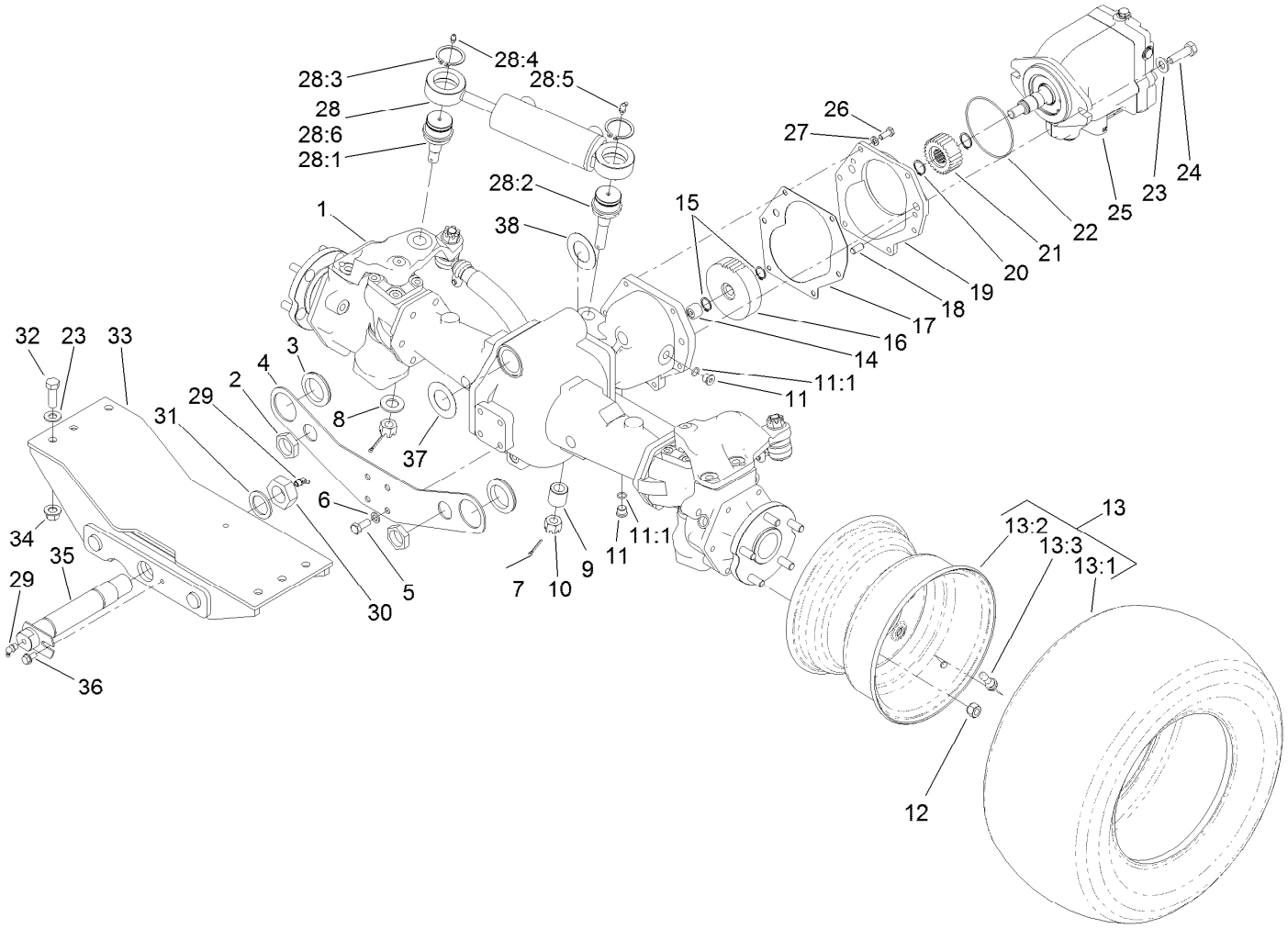

Rear Axle and Steering Cylinder Assembly

Ref.	Part Number	Qty.	Description
1	110-4750	1	Drive Axle ASM
2	340-126	2	Nut-Bulkhead
3	240-2	2	Grommet-Rubber
4	120-9069-03	1	Plate-Mount, Bulkhead
5	43-0090	4	Screw-HH
6	48-9590	4	Washer-Lock
7	3272-12	2	Pin-Cotter
8	92-5836	1	Washer
9	100-3796	1	Spacer-Joint, Ball
10	32136-14	2	Nut-Hst
11	353-989	2	Plug-Hex, Hollow
11:1	237-42	1	O-Ring
12	93-5268	10	Nut-Lug
13		2	Tire And Wheel ASM ●
13:1	120-8910	1	Tire-Off Road
13:2	120-8909	1	Rim
13:3	232-27	1	Stem-Valve
14	74-5700	1	Bearing-Needle, Roller

Ref.	Part Number	Qty.	Description
15	32120-15	2	Ring-Snap, EXT
16	100-3053	1	Gear-45 Tooth
17	106-1140	1	Gasket
18	104-2353	2	Pin-Dowel
19	95-7541	1	Plate-Cover
20	32120-76	2	Ring-Snap, EXT
21	104-0755	1	Pinion-27 Tooth
22	237-166	1	O-Ring
23	3256-26	8	Washer-Flat
24	325-7	2	Screw-HH
25	120-8814	1	HYD Motor ASM
26	33114-020	6	Screw-HH
27	3253-4	6	Washer-Lock
28	121-1535	1	Steering Cylinder ASM
28:1	106-6774	1	Joint-Ball
28:2	100-3795	1	Joint-Ball
28:3	32151-104	2	Ring-Retaining, External
28:4	302-5	1	Fitting-Grease

● Not serviced separately

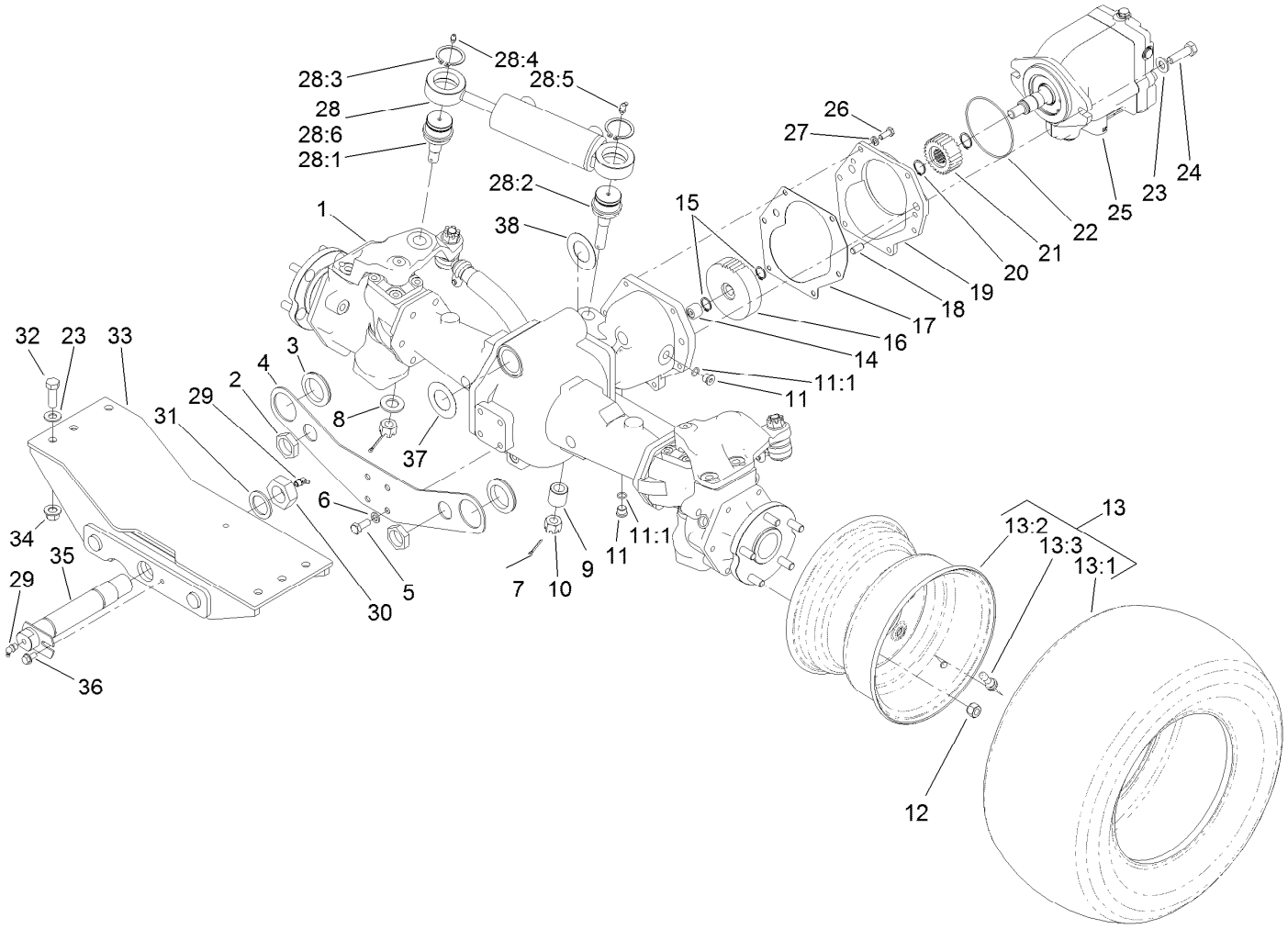

Rear Axle and Steering Cylinder Assembly (continued)

Ref.	Part Number	Qty.	Description
28:5	302-60	1	Fitting-Grease
28:6	121-1534	1	HYD Steering Cylinder ASM
29	302-33	2	Fitting-Grease
30	3296-68	1	Nut-Lock, NI
31	92-1765	1	Washer-Thrust
32	325-6	6	Screw-HH

Ref.	Part Number	Qty.	Description
33	120-8895-03	1	Mount-Rear
34	99-5107	6	Nut-Lock
35	98-7077	1	Pin-Axle, Rear
36	32144-14	1	Screw-HWHTF
37	99-8431	2	Washer-Thrust
38	99-8432	2	Washer-Thrust

● Not serviced separately

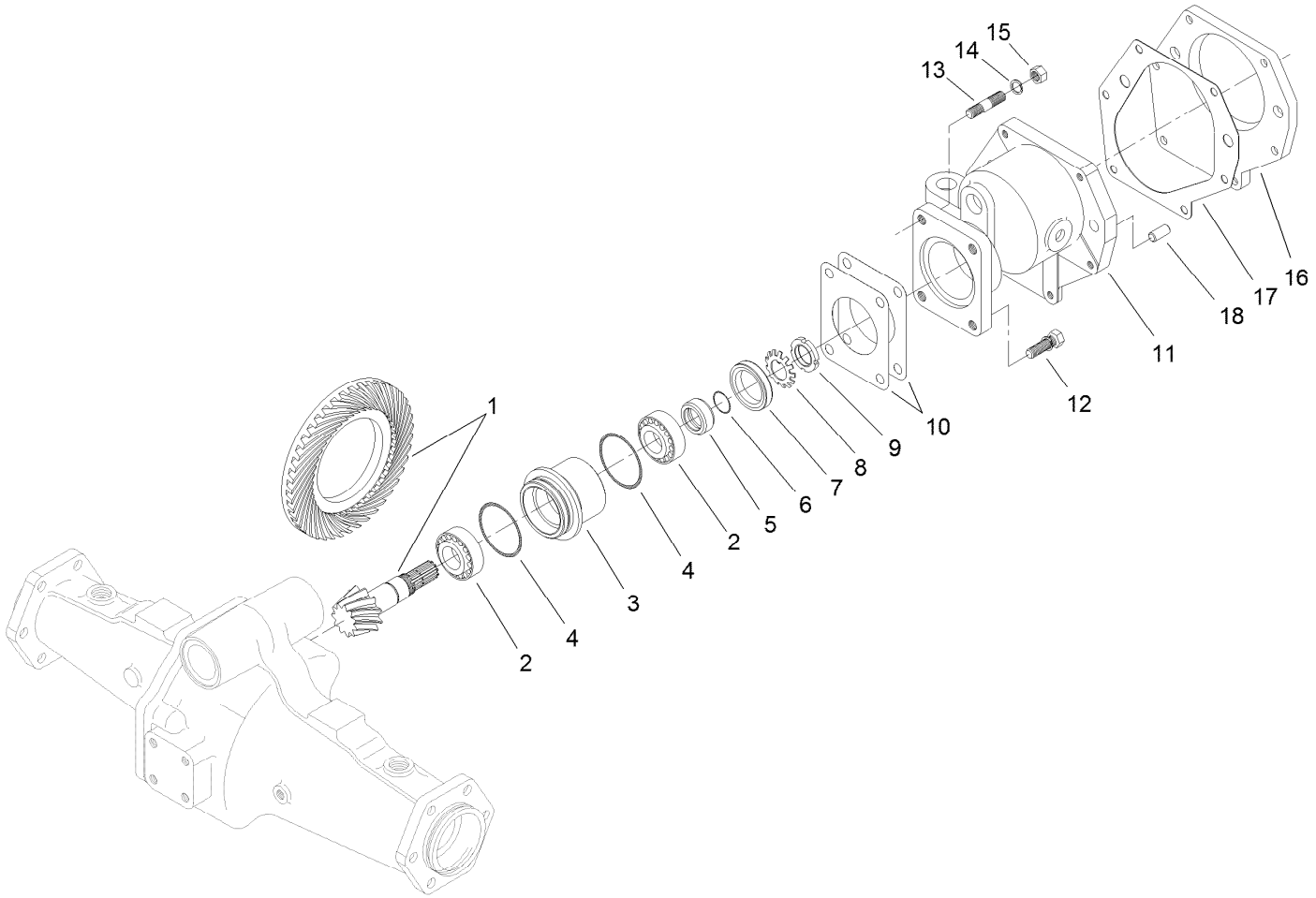

Bevel Pinion Shaft Assembly
Rear Axle Assembly No. 110-4750

Ref.	Part Number	Qty.	Description
1	106-1093	1	Ring And Pinion Set
2	99-7570	2	Bearing-Roller, Taper
3	95-7534	1	Case-Bearing
4	106-1065	2	O-Ring
5	99-7572	1	Collar-Seal, Oil
6	106-1066	1	O-Ring
7	99-7574	1	Seal-Oil
8	99-7559	1	Washer-Lock
9	99-7560	1	Nut-Lock
10	99-7550	2	Shim 0.1

Ref.	Part Number	Qty.	Description
10	99-7551	2	Shim 0.2
11	95-7533	1	Case-Gear
12	99-7575	2	Bolt
13	98-7735	2	Stud
14	99-7527	2	Washer-Spring
15	99-7526	2	Nut
16	95-7541	1	Plate-Cover
17	106-1140	1	Gasket
18	104-2353	2	Pin-Dowel

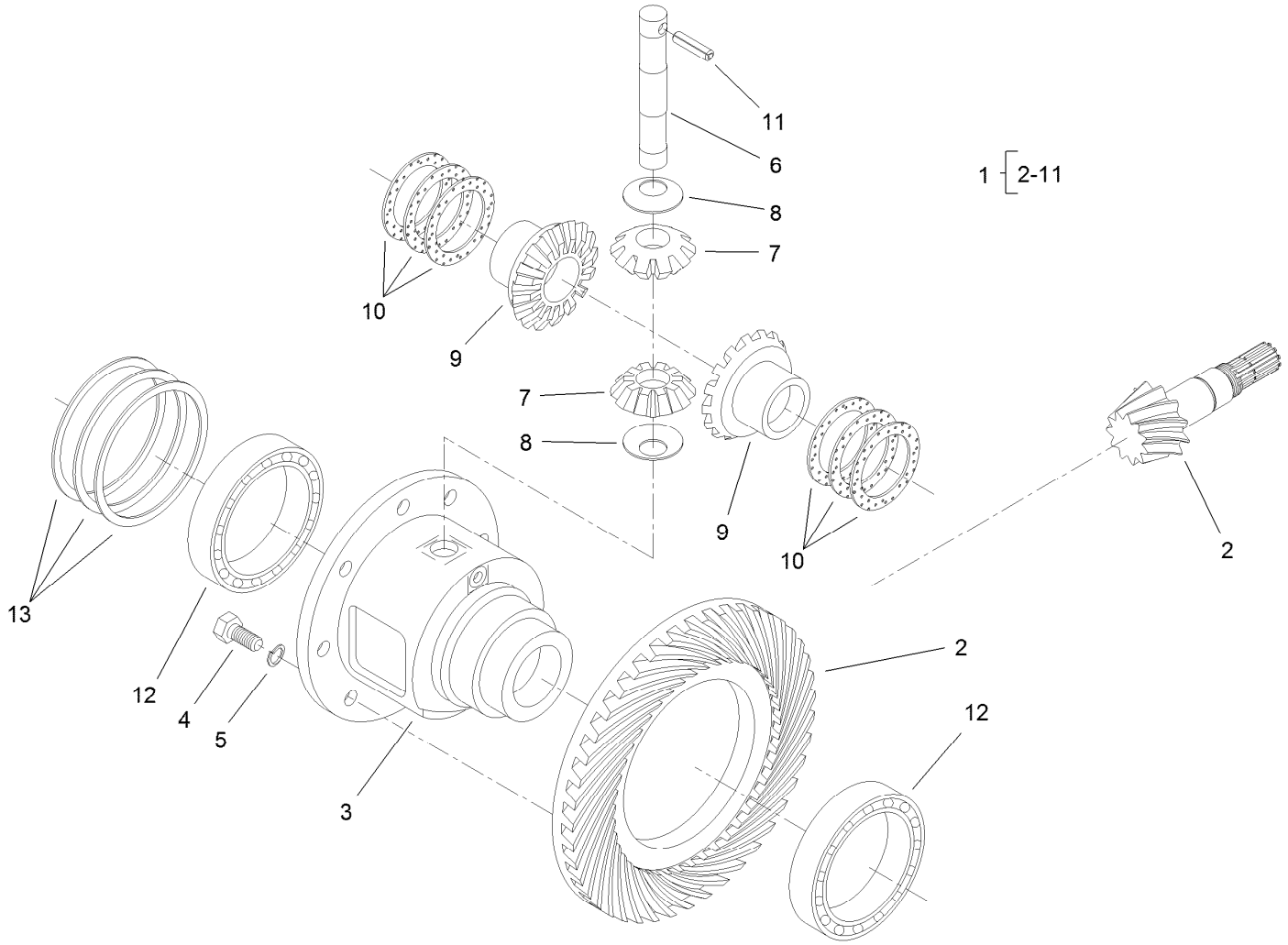

Differential Assembly
Rear Axle Assembly No. 110-4750

Ref.	Part Number	Qty.	Description
1	95-7503	1	Differential ASM
2	106-1093	1	Ring And Pinion Set
3	95-7502	1	Case-Differential
4	99-7576	8	Bolt
5	3253-4	8	Washer-Lock
6	99-7578	1	Shaft-Differential
7	99-7579	2	Pinion-Differential
8	99-7580	2	Washer-Differential
9	99-7581	2	Gear-Differential

Ref.	Part Number	Qty.	Description
10	99-7582	2	Washer-Differential
10	99-7583	2	Washer-Differential
10	99-7584	2	Washer-Differential
11	99-7588	1	Pin-Spring
12	99-7562	2	Bearing-Ball
13	99-7585	2	Shim 0.1
13	99-7586	2	Shim 0.2
13	99-7587	2	Shim 0.4

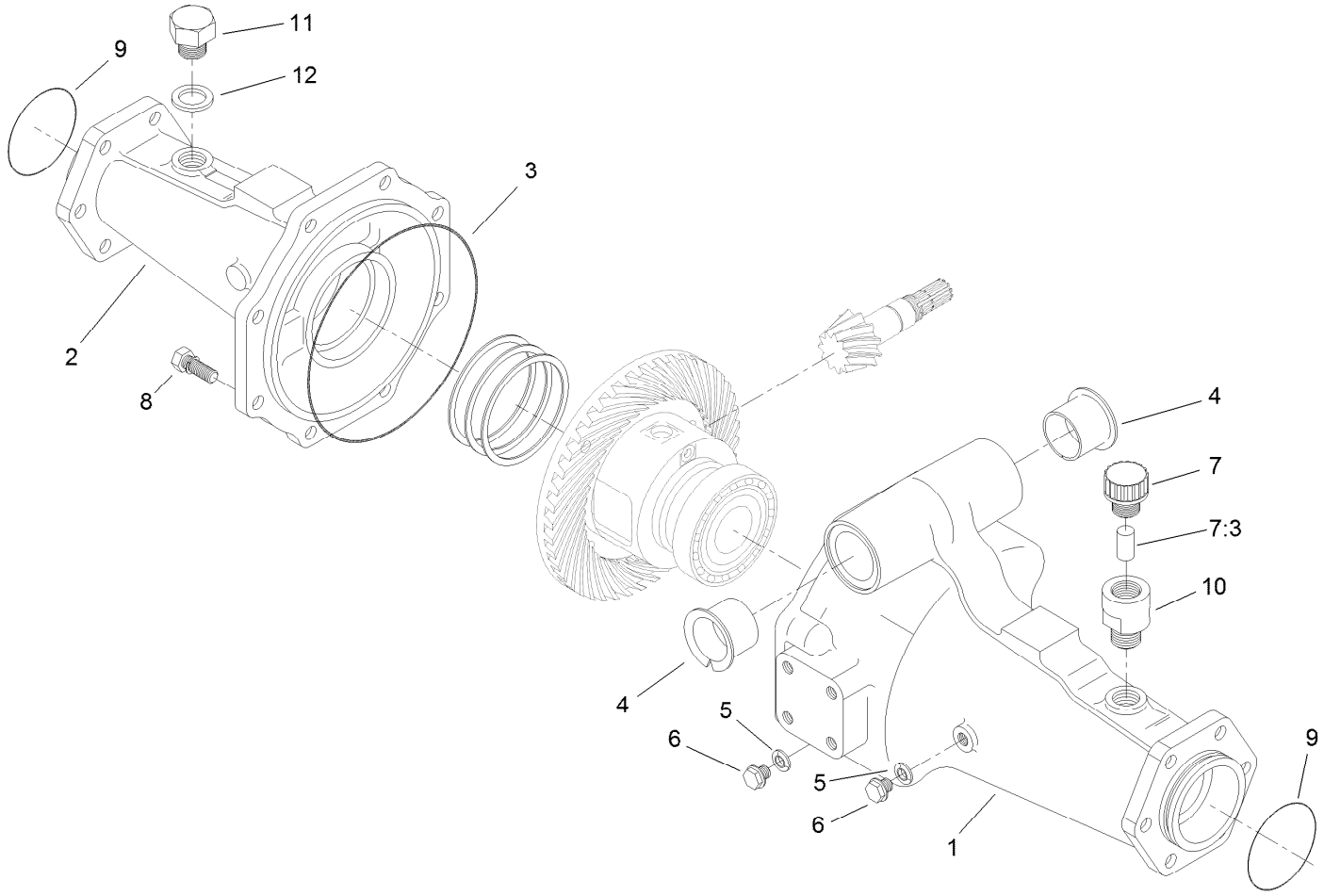

Axle Support Assembly
Rear Axle Assembly No. 110-4750

Ref.	*Part Number*	*Qty.*	*Description*
1	95-7508	1	Support-Axle
2	95-7506	1	Support-Axle
3	106-1067	1	O-Ring
4	95-7537	2	Bushing-Flanged
5	99-7590	2	Washer-Seal
6	99-7589	2	Plug
7	110-4812	1	Axle Vent ASM
7:3	110-4815	1	Insert-Filter, Foam
8	99-7592	8	Bolt
9	106-1068	2	O-Ring
10	104-2377	1	Extension-Vent
11	104-8643	1	Plug
12	104-8644	1	O-Ring

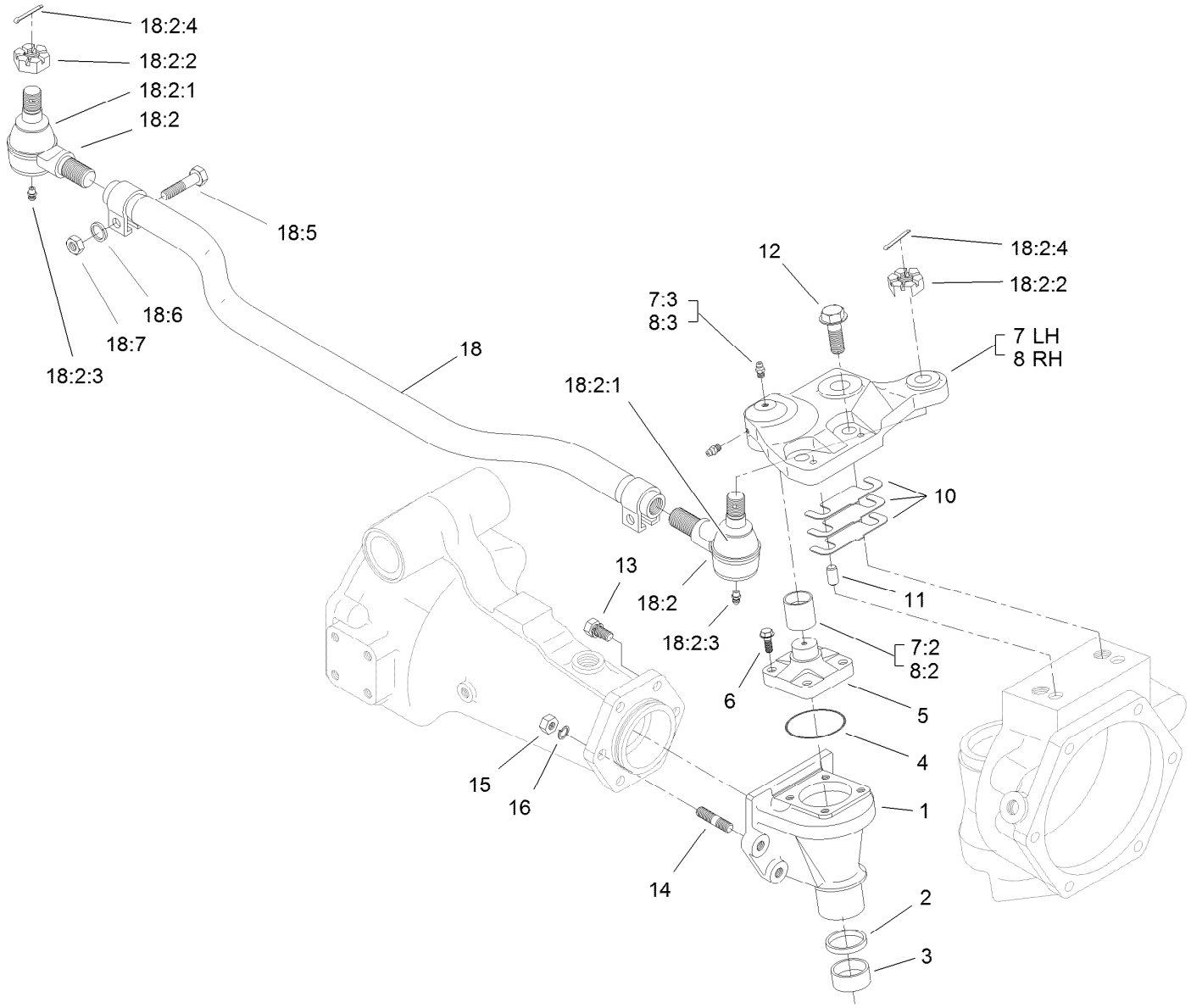

Bevel Gear Case Assembly
Rear Axle Assembly No. 110-4750

Ref.	Part Number	Qty.	Description
1	110-4752	2	Case-Gear, Bevel
2	110-4754	2	Seal-Oil
3	104-2378	2	Bushing
4	106-1069	2	O-Ring
5	104-2373	2	Knuckle
6	104-2374	8	Bolt
7	100-3768	1	LH Steering Arm ASM
7:2	104-8634	1	Bushing
7:3	106-1104	2	Fitting-Grease
8	100-3766	1	RH Steering Arm ASM
8:2	104-8634	1	Bushing
8:3	106-1104	2	Fitting-Grease
10	95-7547	2	Shim 0.1
10	95-7548	2	Shim 0.2
10	95-7549	2	Shim 0.3
11	99-7597	4	Pin-Dowel

Ref.	Part Number	Qty.	Description
12	104-2375	4	Bolt
13	99-7599	8	Bolt
14	99-7525	4	Stud
15	99-7526	4	Nut
16	99-7527	4	Washer-Spring
18	106-1141	1	Steering Tie Rod ASM
18:2	106-1113	2	Tie Rod End ASM - RH Thread
18:2:1	100-3853	1	Cover-Dust
18:2:2	100-3854	1	Nut-Castle
18:2:3	110-4755	1	Fitting-Grease
18:2:4	3272-11	1	Pin-Cotter
18:5	100-3855	2	Bolt
18:6	99-7527	2	Washer-Spring
18:7	99-7526	2	Nut

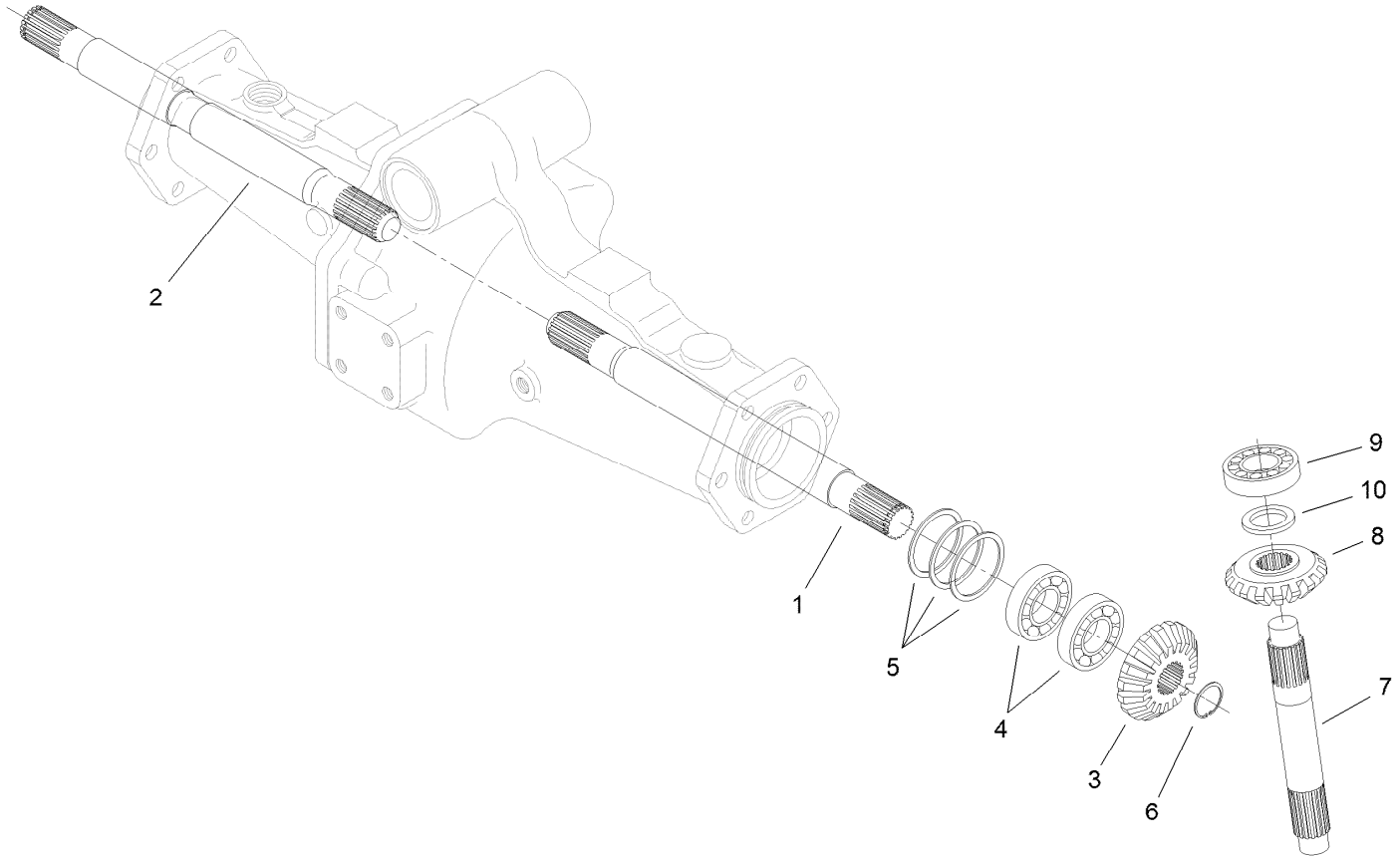

Bevel Gear Shaft Assembly
Rear Axle Assembly No. 110-4750

Ref.	*Part Number*	*Qty.*	*Description*
1	95-7509	1	Shaft-Gear, Differential
2	95-7512	1	Shaft-Gear, Differential
3	95-7517	2	Gear-Bevel, 15 Tooth
4	99-7530	4	Bearing-Ball
5	99-7552	2	Shim 0.1
5	99-7553	2	Shim 0.2
5	99-7554	2	Shim 0.5
6	99-7531	2	Clip
7	110-4753	2	Shaft-Gear, Bevel
8	95-7519	2	Gear-Bevel, 17 Tooth
9	99-7532	2	Bearing-Roller, Taper
10	99-7558	2	Collar

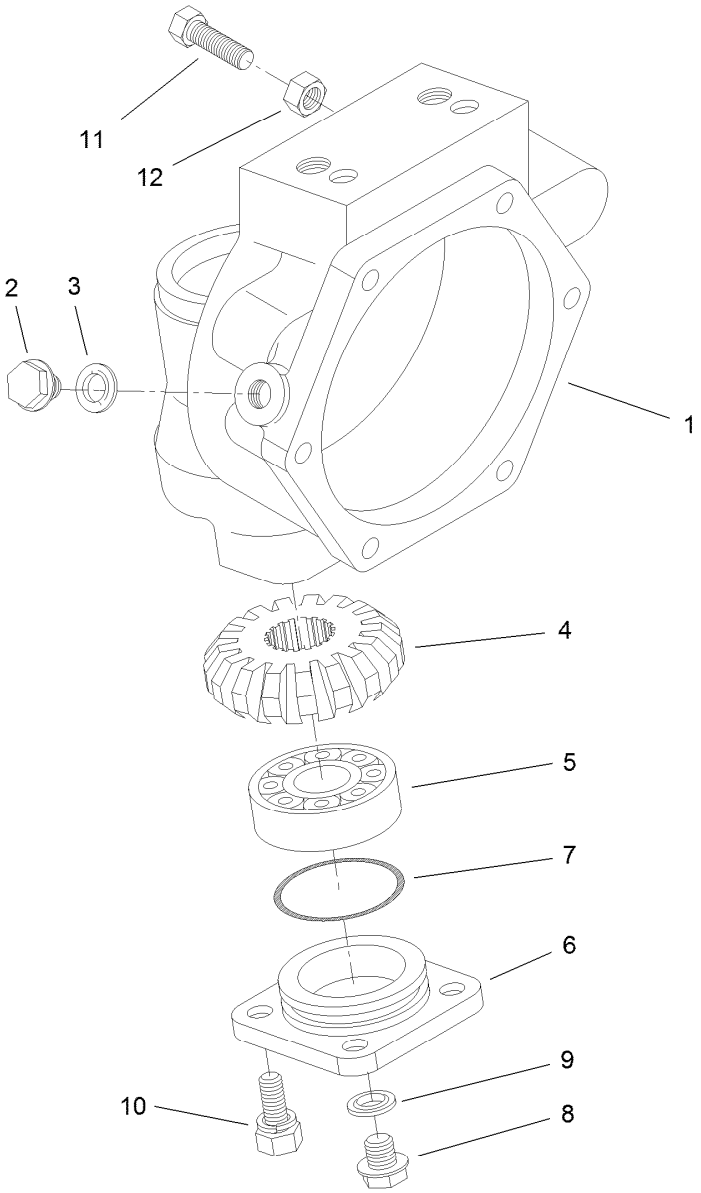

Axle Case Assembly
Rear Axle Assembly No. 110-4750

Ref.	*Part Number*	*Qty.*	*Description*
1	110-4751	2	Case-Axle
2	99-7535	2	Plug
3	99-7536	2	Washer-Seal
4	95-7527	2	Gear-Bevel, 17 Tooth
5	99-7532	2	Bearing-Roller, Taper
6	100-2560	2	Cover
7	106-1070	2	O-Ring
8	99-7589	2	Plug
9	99-7590	2	Washer-Seal
10	100-2562	8	Bolt
11	106-1102	2	Bolt-Stop
12	106-1103	2	Nut

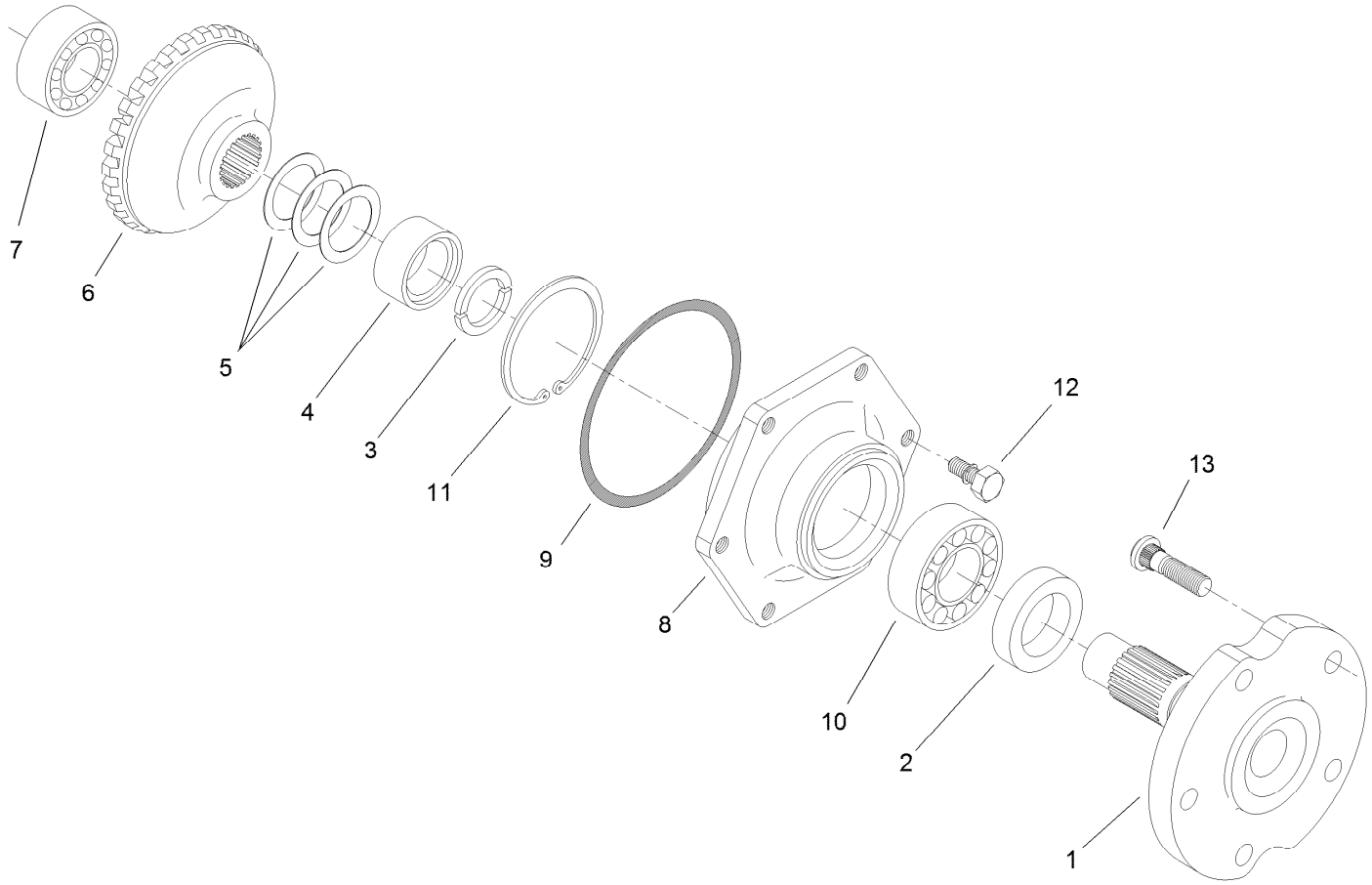

Axle Assembly
Rear Axle Assembly No. 110-4750

Ref.	*Part Number*	*Qty.*	*Description*
1	95-7522	2	Axle
2	99-7564	2	Seal-Oil
3	95-7544	4	Clip
4	95-7523	2	Spacer
5	99-7555	2	Shim 0.3
5	99-7556	2	Shim 0.2
5	99-7557	2	Shim 0.5
6	95-7524	2	Gear-Bevel, 29 Tooth
7	99-7534	2	Bearing-Ball
8	95-7521	2	Cover-Axle
9	106-1071	2	O-Ring
10	99-7561	2	Bearing-Ball
11	99-7539	2	Clip
12	99-7596	12	Bolt
13	99-7563	10	Stud

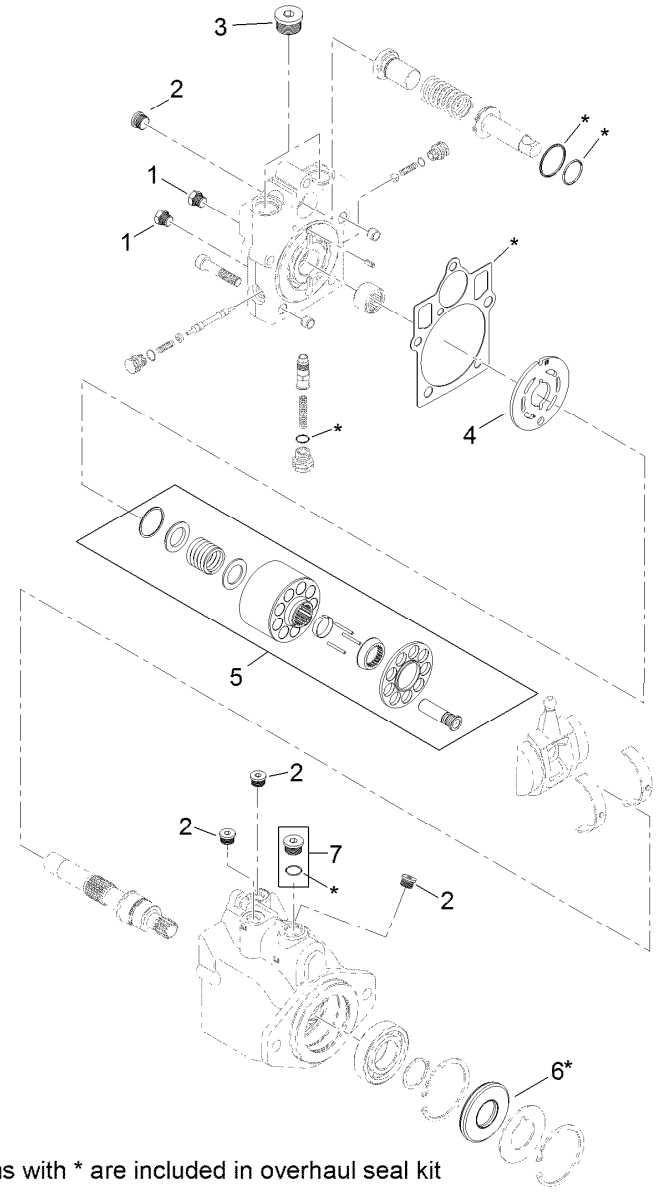

8 = all items with * are included in overhaul seal kit

Hydraulic Motor Assembly No. 120-8814

Ref.	*Part Number*	*Qty.*	*Description*
1	92-1352	2	Plug
2	69-3080	5	Plug
3	69-3130	2	Plug
4	121-1734	1	Plate-Valve
5	110-6472	1	Cylinder Block Kit ASM
6	69-3190	1	Seal-Lip
7	67-9090	1	Plug
8	121-1736	1	Overhaul Seal Kit

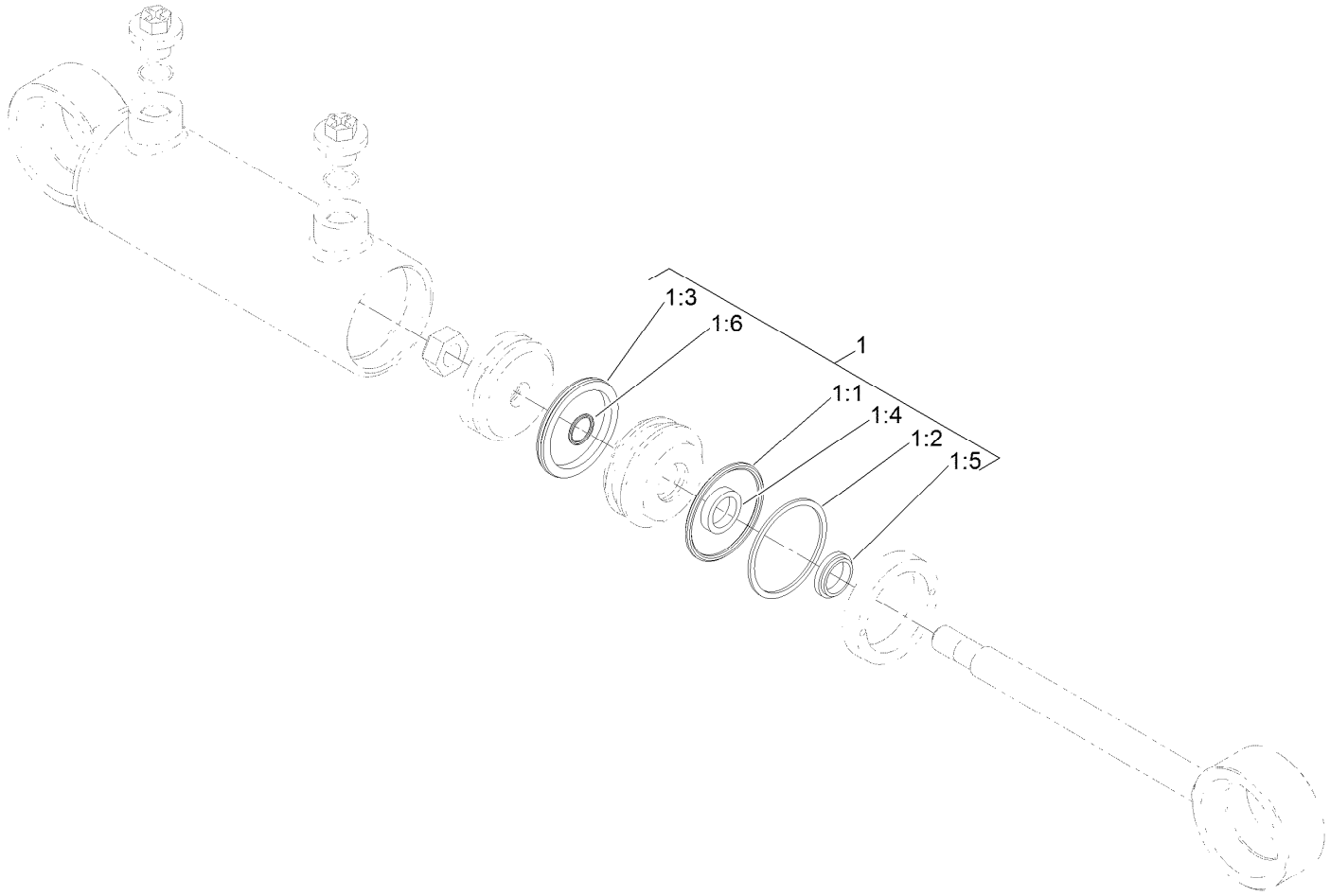

Steering Cylinder Assembly No. 121-1534

Ref.	*Part Number*	*Qty.*	*Description*
1	125-4302	1	Seal Kit
1:1		1	O-Ring ●
1:2		1	Backup ●
1:3		1	Bp Seal ●
1:4		1	Bt Seal ●
1:5		1	Dust Seal ●
1:6		1	O-Ring ●

● Not serviced separately

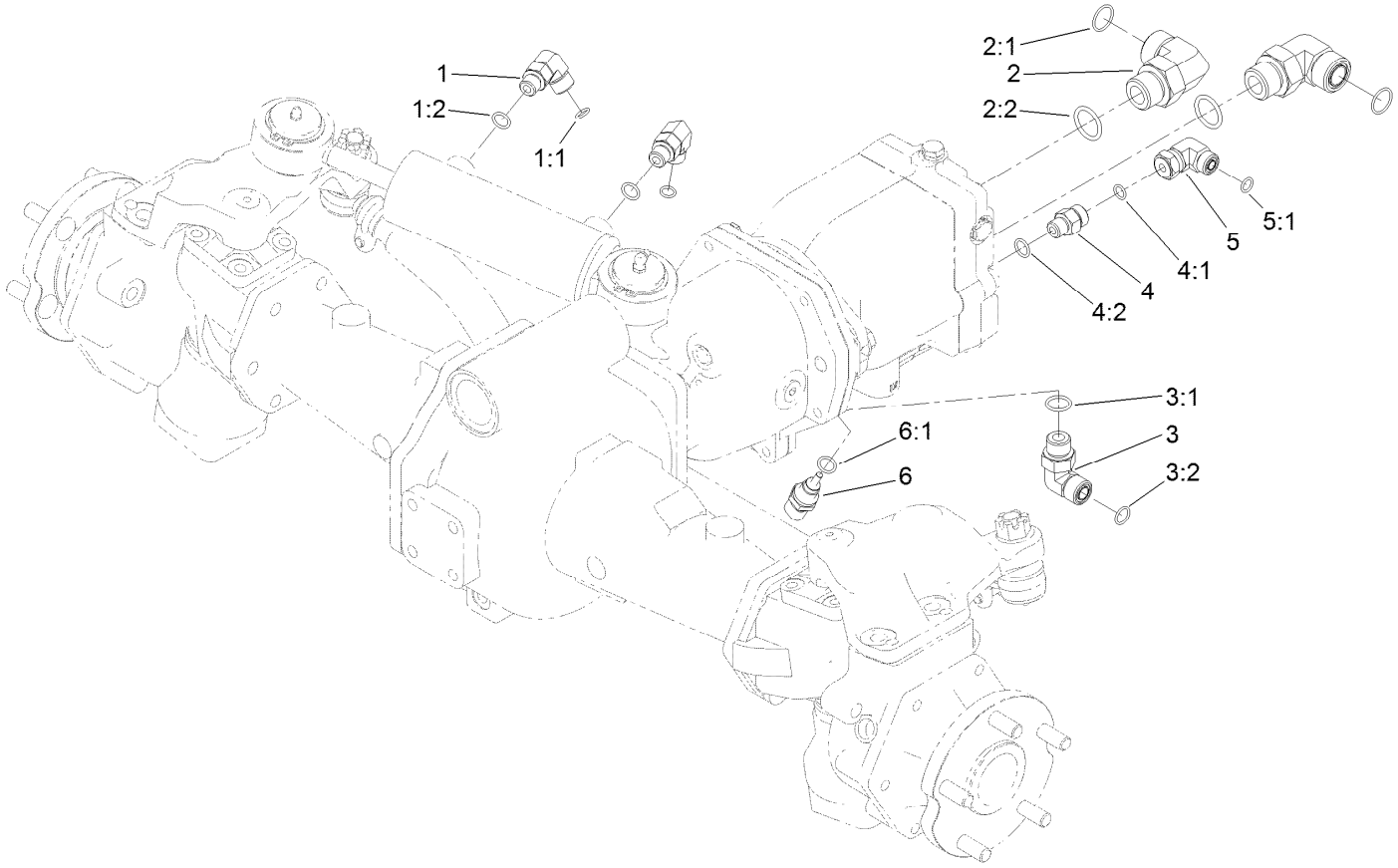

Hydraulic Fitting Assembly

Ref.	Part Number	Qty.	Description
1	340-77	2	Fitting-Elbow, 90 DEG
1:1	237-22	1	O-Ring
1:2	237-42	1	O-Ring
2	340-142	2	Fitting-Elbow, 90 DEG
2:1	237-58	1	O-Ring
2:2	237-81	1	O-Ring
3	340-98	1	Fitting-Elbow, 90 DEG
3:1	237-79	1	O-Ring

Ref.	Part Number	Qty.	Description
3:2	237-30	1	O-Ring
4	340-2	1	Fitting-Straight
4:1	237-22	1	O-Ring
4:2	237-42	1	O-Ring
5	340-159	1	Elbow-90
5:1	237-22	2	O-Ring
6	110-8829	1	Sender-Temperature
6:1	237-42	1	O-Ring

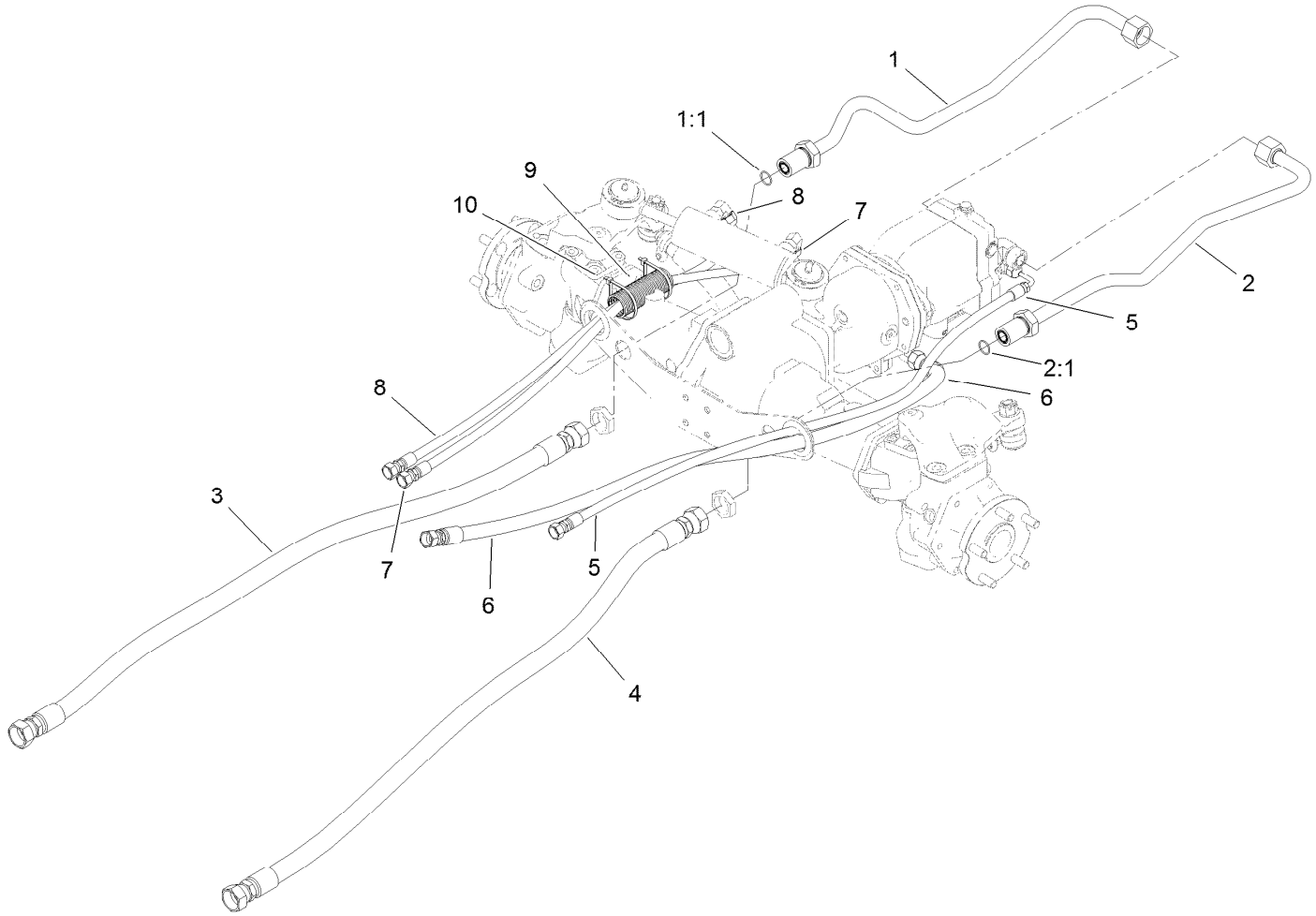

Hose and Tube Routing Assembly

Ref.	*Part Number*	*Qty.*	*Description*
1	120-9067	1	HYD Tube ASM
1:1	237-58	1	O-Ring
2	120-9068	1	Tube ASM
2:1	237-58	1	O-Ring
3	121-1502	1	Hose-HYD
4	114-0024	1	Hose-HYD
5	121-1459	1	Hose-HYD
6	121-1458	1	Hose-HYD
7	121-1500	1	Hose-HYD
8	121-1501	1	Hose-HYD
9	121-1544	2	Cover-Hose
10	3290-379	4	Tie-Cable

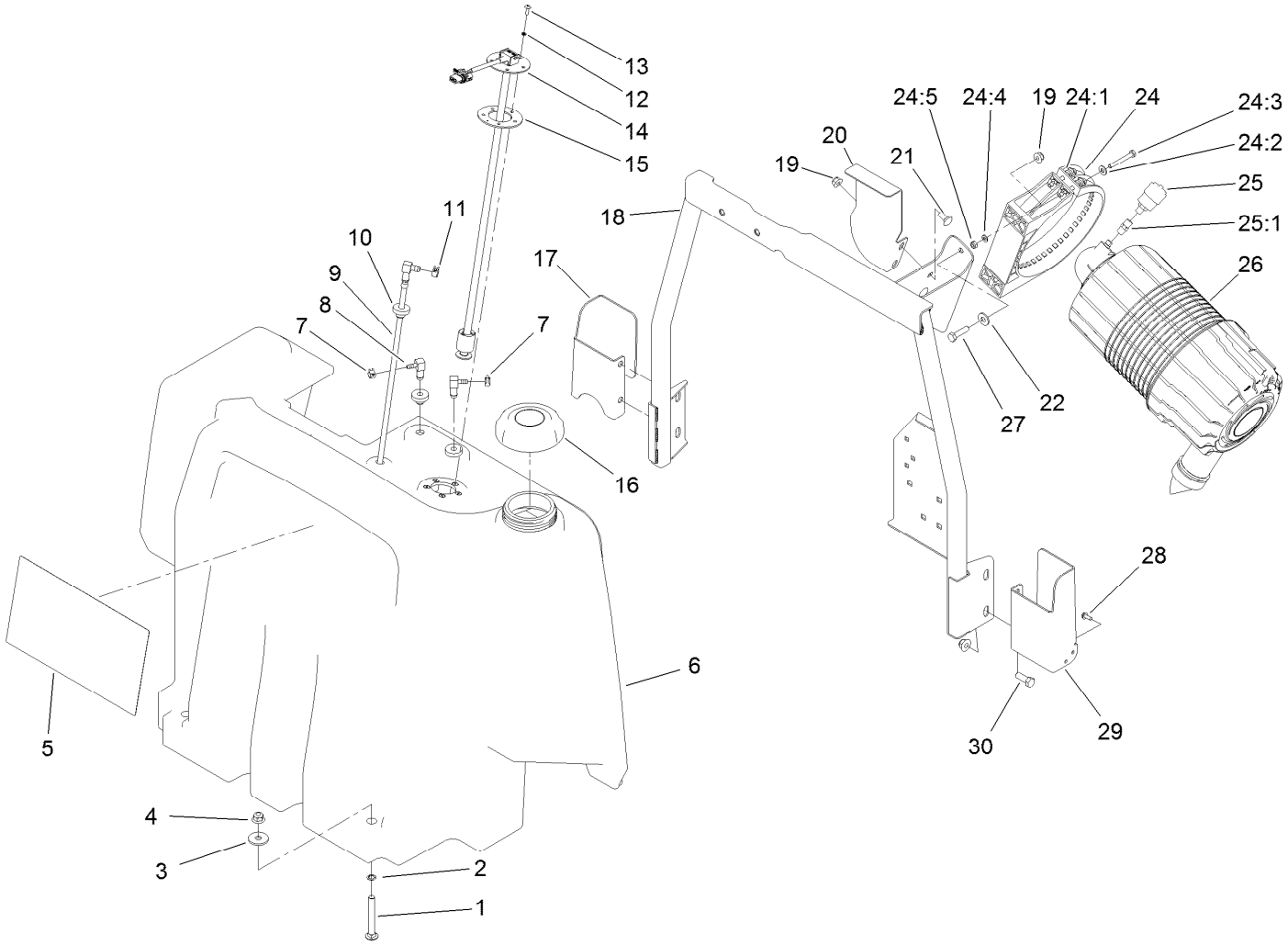

Fuel Tank and Air Cleaner Assembly

Ref.	Part Number	Qty.	Description
1	3231-10	2	Screw-CARR
2	32151-72	2	Ring-Retaining
3	63-8410	2	Washer
4	104-8301	6	Nut-HF, NI
5	130-6043	1	Decal-Service
6	120-4195	1	Tank-Fuel
7	2412-98	2	Clamp-Hose
8	104-5228	2	Fitting-Elbow, 90 DEG
9	120-8908	1	Pipe-Stand
10	46-6560	3	Bushing
11	92-2379	1	Clamp-Hose
12	3253-15	5	Washer-Lock
13	32122-24	5	Screw-PTH
14	121-1688	1	Gauge-Fuel
15	121-1707	1	Gasket-Fuel, Viton
16	125-9171	1	Cap-Fuel
17	121-1514-03	1	Bracket-Latch, RH
18	120-4190-03	1	Support-Tank

Ref.	Part Number	Qty.	Description
19	104-8300	4	Nut-HF, NI
20	120-4193-03	1	Bracket-Fuel Tank
21	3230-1	2	Bolt-CARR
22	3256-3	2	Washer-Flat
24	99-5414	1	Strap-Cleaner, Air
24:1	108-1512	2	Spring
24:2	3256-22	2	Washer-Flat
24:3	33113-050	2	Screw-HH
24:4	33093-00	2	Washer-Flat
24:5	33023-00	2	Nut-Lock
25	104-3563	1	Indicator
25:1	94-1416	1	Adapter-Indicator
26	99-5410	1	Air Cleaner ASM
27	322-6	2	Screw-HH
28	32144-1	4	Screw-Taptite
29	121-1513-03	1	Bracket-Latch, LH
30	323-6	4	Screw-HH

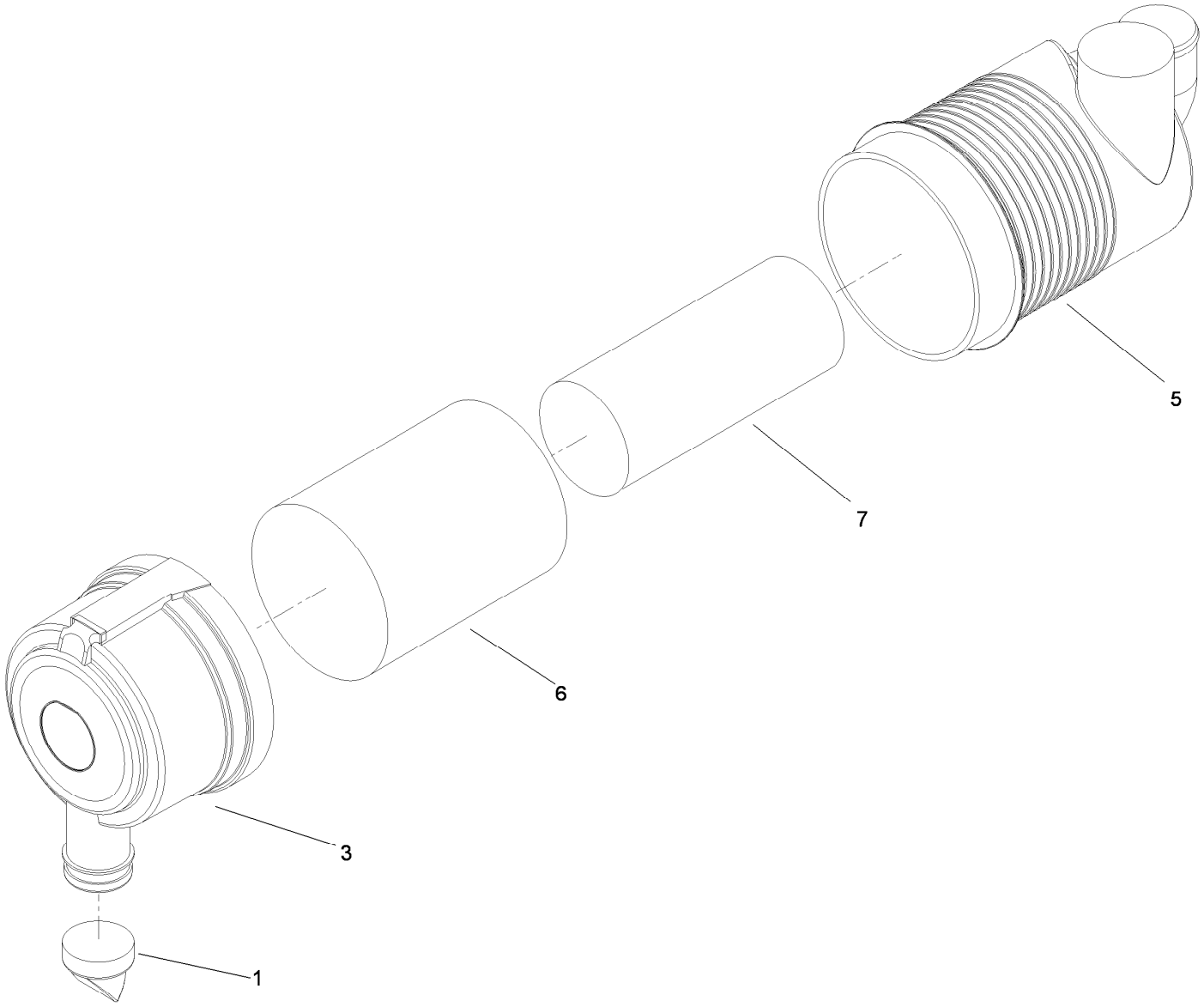

Air Cleaner Assembly No. 99-5410

Ref.	*Part Number*	*Qty.*	*Description*
1	104-4258	1	Valve-Vacuator
3	104-4259	1	Cover
5		1	Body ASM ●
6	108-3814	1	Filter-Air
7	108-3816	1	Filter-Air

● Not serviced separately

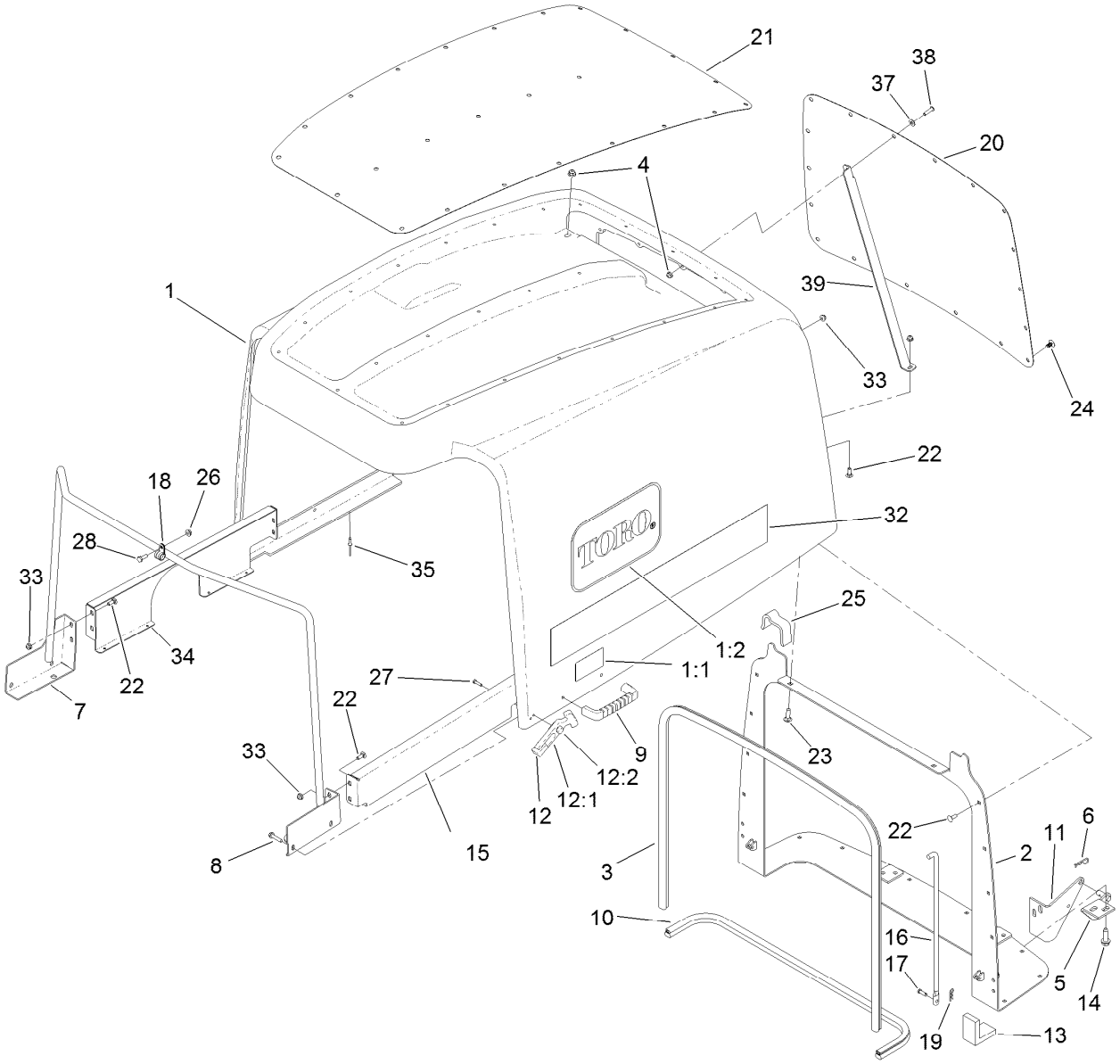

Hood Assembly

Ref.	Part Number	Qty.	Description
1	120-9090	1	Hood ASM
1:1	106-6754	1	Decal-Danger
1:2	66-1210	2	Decal
2	120-9099-03	1	Pivot-Hood
3	114-3823	1	Seal-Bulb
4	104-8300	2	Nut-HF, NI
5	121-1470	2	Pivot-Screen
6	3290-467	2	Pin-Hair
7	120-4196-03	1	Support-Hood
8	46-8092	4	Screw-Plastite
9	65-5100	2	Handle-Door
10	104-3590	1	Seal-Bulb
11	104-3588-03	2	Pivot-Screen
12	94-5626	2	Flexible Draw Latch ASM
12:1	103-4080	1	Latch-Rubber
12:2	103-4081	1	Latch-Keeper
13	104-3580	2	Seal-Corner, Screen
14	32144-109	8	Screw-Thd
15	120-8949-03	1	Support-Hood, LH
16	104-8313	2	Rod-Hood

Ref.	Part Number	Qty.	Description
17	283-67	2	Pin-Clevis
18	2412-134	2	Clamp-R
19	3290-307	2	Pin-Cotter
20	120-9096-03	1	Screen-Hood, Rear
21	120-9097-03	1	Screen-Hood, Top
22	3229-1	24	Screw-CARR
23	3230-2	2	Bolt-CARR
24	117-2382	42	Plug-Plastic
25	120-9087	2	Seal-Foam
26	32128-33	2	Nut-HF
27	32104-4	2	Screw
28	321-4	2	Screw-HH
32	119-0054	2	Decal-Hood
33	104-7201	25	Nut-HF, NI
34	120-8948-03	1	Support-Hood, RH
35	3269-4	8	Rivet-Pop
37	3256-1	1	Washer-Flat
38	3274-65	1	Screw-HSBH
39	127-3707-03	1	Support-Hood

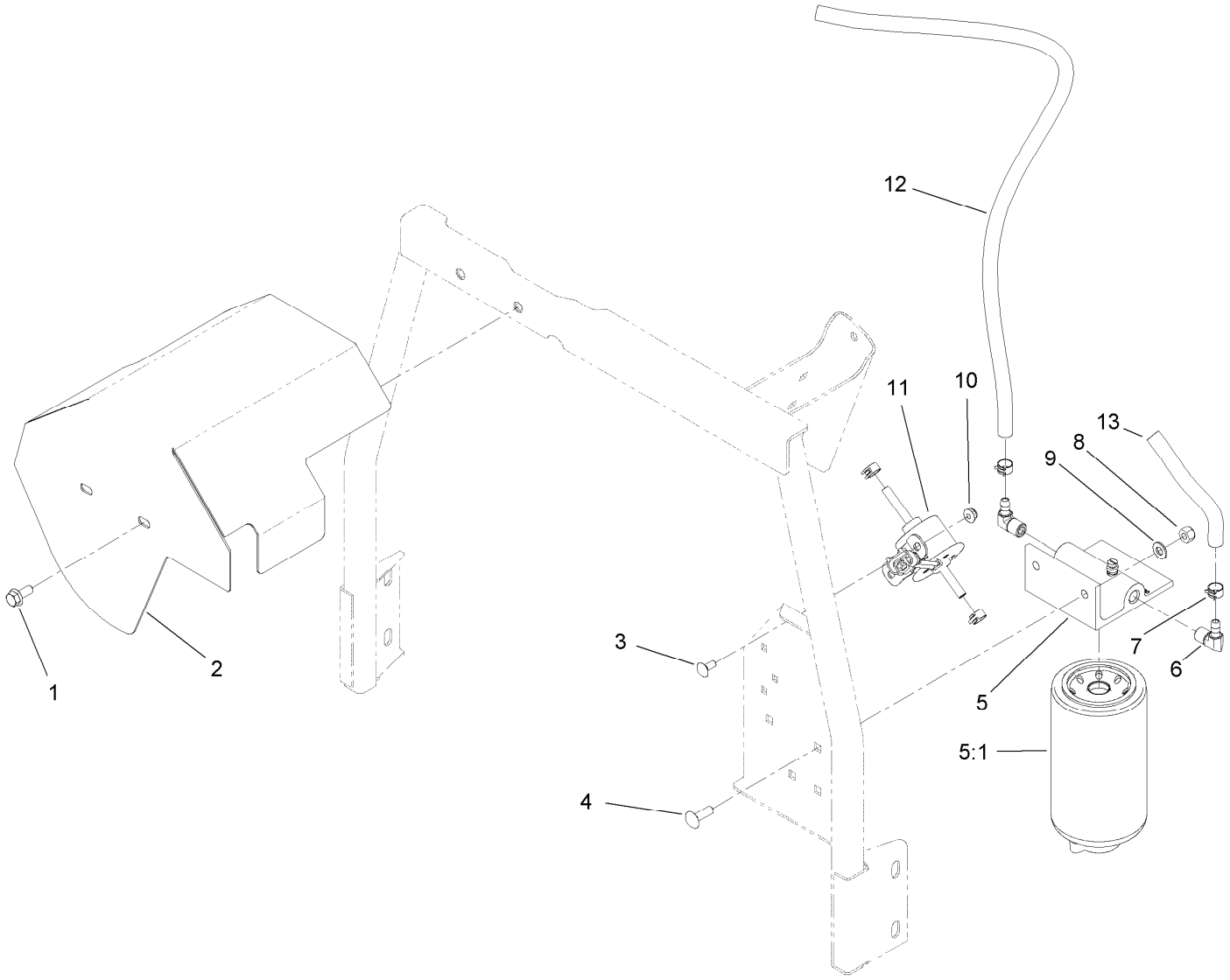

Fuel/Water Separator Assembly

Ref.	Part Number	Qty.	Description
1	3234-47	2	Screw-HHF
2	120-4188-03	1	Bracket-Guard, Fuel Tank
3	3229-11	2	Screw-CARR
4	3230-22	2	Screw-CARR
5	125-2914	1	Filter-Separator
5:1	125-2915	1	Filter-Fuel/Water Separator
6	353-781	2	Fitting-HYD, 90
7	92-2379	4	Clamp-Hose
8	3296-29	2	Nut-Lock, NI
9	3256-23	2	Washer-Plain
10	104-7201	2	Nut-HF, NI
11	121-5613	1	Pump-Fuel, Electric
12	109-0309	1	Hose-Fuel
13	110-3256	1	Hose-Fuel

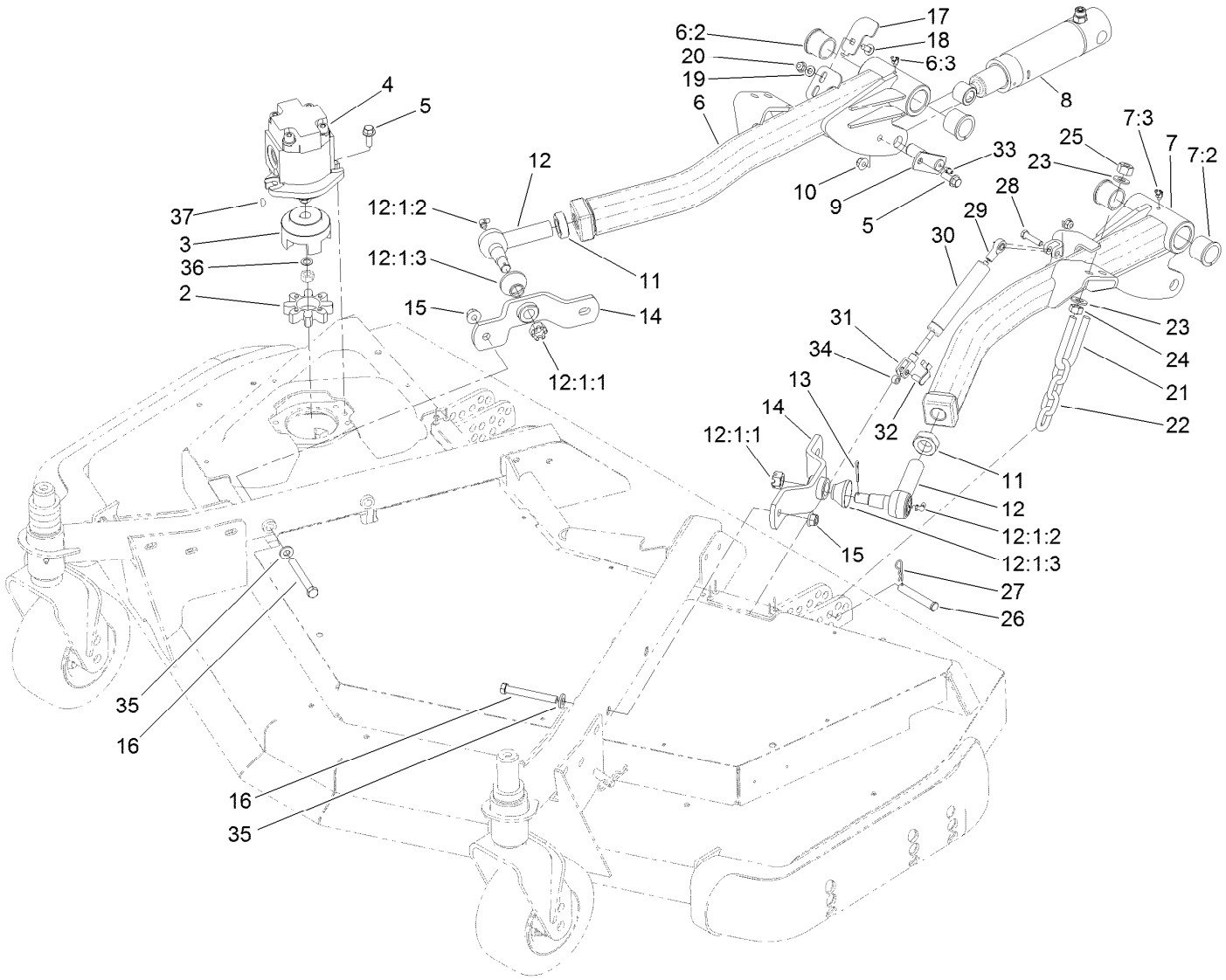

Front Deck Installation Assembly

Ref.	Part Number	Qty.	Description
2	104-3542	1	Spider
3	104-3541	1	Hub-Spider
4	127-3694	1	HYD Motor ASM
5	3234-42	4	Screw-HHF
6	120-8878	1	RH Lift Arm ASM
6:2	104-0015	2	Bushing-Flange
6:3	302-11	1	Fitting-Lube, 45 DEG
7	120-8879	1	LH Lift Arm ASM
7:2	104-0015	2	Bushing-Flange
7:3	302-11	1	Fitting-Lube, 45 DEG
8	120-8802	2	HYD Cylinder ASM
9	100-3020	2	Pin
10	104-8301	2	Nut-HF, NI
11	21-3001	2	Nut-Jam
12	86-8101-01	2	Joint-Ball, LH
12:1:1	32136-2	1	Nut-SHH
12:1:2	302-40	1	Fitting-Grease, 90 DEG
12:1:3	114-2874	1	Seal-Ball Joint
13	3272-12	2	Pin-Cotter
14	93-4583-01	2	Mount-Joint, Ball
15	114-8417	4	Nut-HF, NI

Ref.	Part Number	Qty.	Description
16	324-19	4	Screw-HH
17	120-8893	1	Plate-Sensor
18	3230-23	1	Bolt-CARR
19	3256-23	1	Washer-Plain
20	104-8300	2	Nut-HF, NI
21	104-0108	2	U-Bolt
22	95-6231	2	Chain-HOC
23	3256-26	8	Washer-Flat
24	3217-9	4	Nut-HH
25	3296-25	4	Nut-Lock, NI
26	283-55	2	Pin-Clevis
27	3290-467	2	Pin-Hair
28	322-17	1	Screw-HH
29	104-8331	1	End-Rod, Spherical
30	105-3249	1	Damper
31	115-5455	1	End-Rod, Clevis
32	115-5454	1	Pin-Spring
33	302-5	2	Fitting-Grease
34	115-2142	1	Spacer
35	87-7480	4	Washer

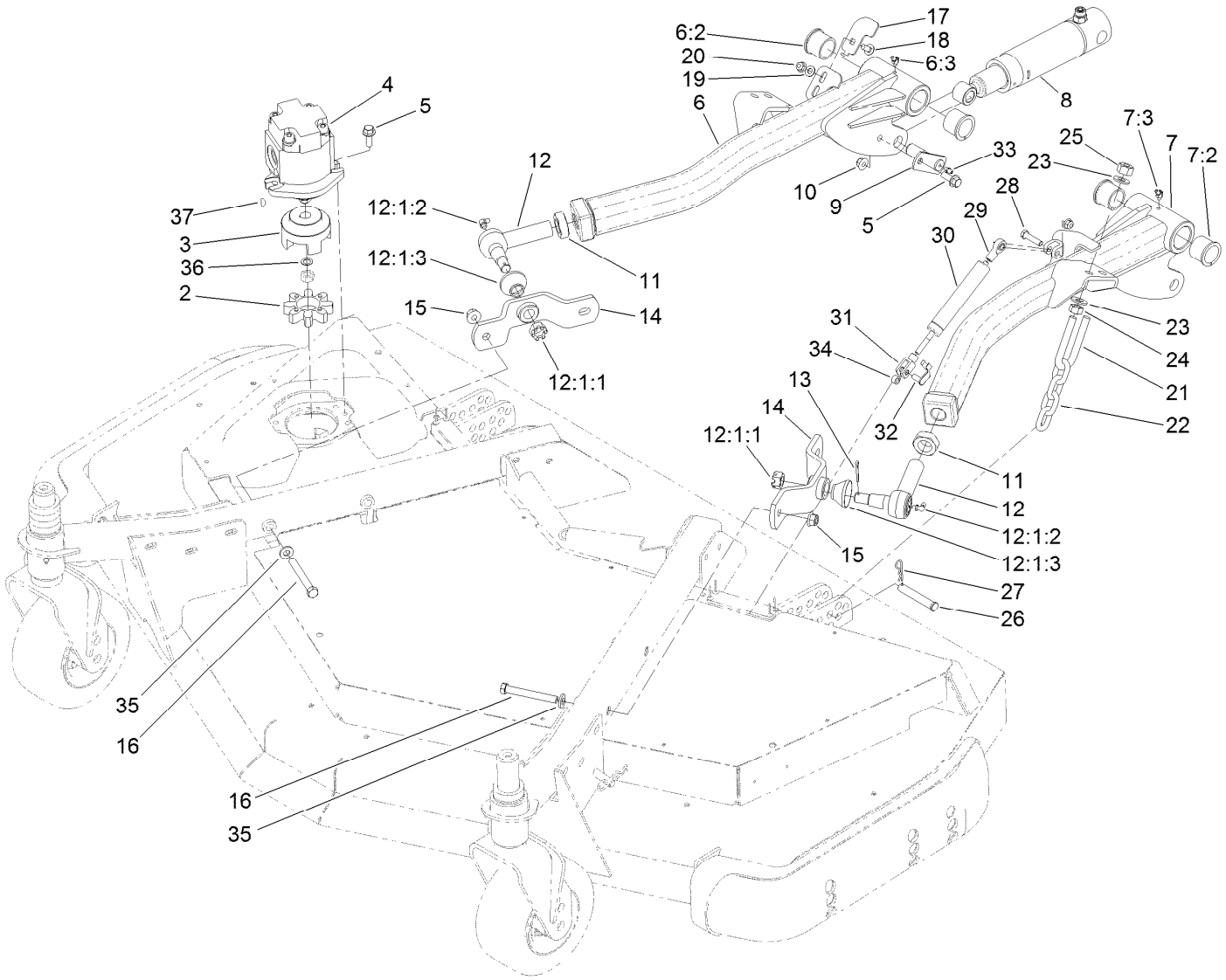

Front Deck Installation Assembly (continued)

Ref.	*Part Number*	*Qty.*	*Description*
36	112-6957	1	Washer-Hardened
37	3257-3	1	Key-Woodruff

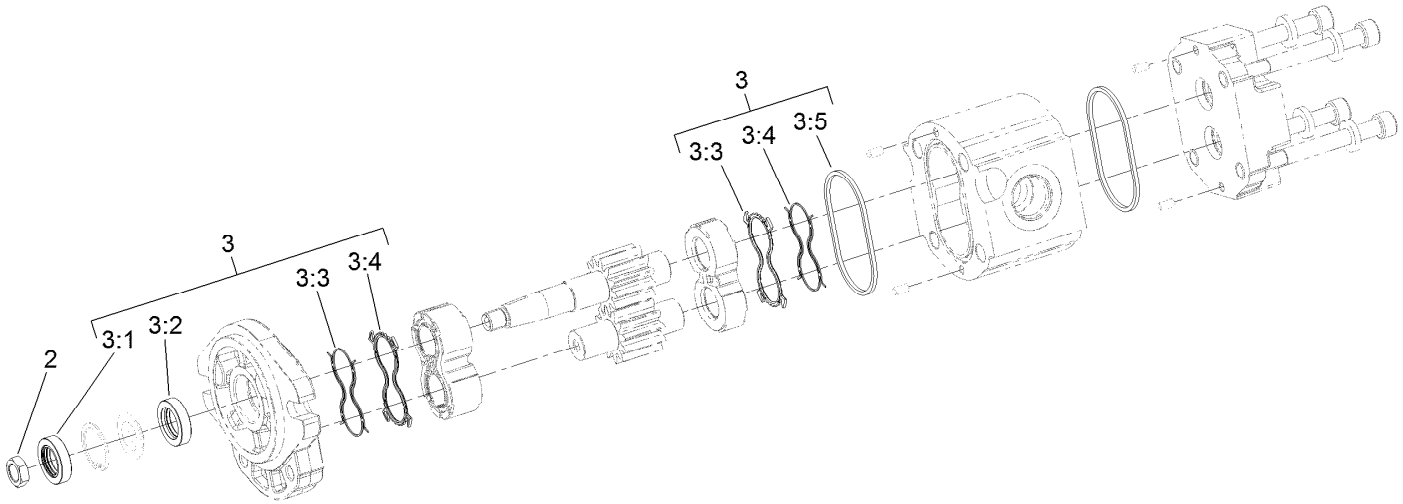

Hydraulic Motor Assembly No. 127-3694

Ref.	*Part Number*	*Qty.*	*Description*
2	110-8815	1	Nut-Hex
3	114-5620	1	Seal Kit
3:1		1	Seal-Shaft ●
3:2		1	Seal-Shaft ●
3:3		2	Seal-Anti Extrusion ●
3:4		2	Seal-Plate, Balancing ●
3:5		2	O Ring-Housing ●

● Not serviced separately

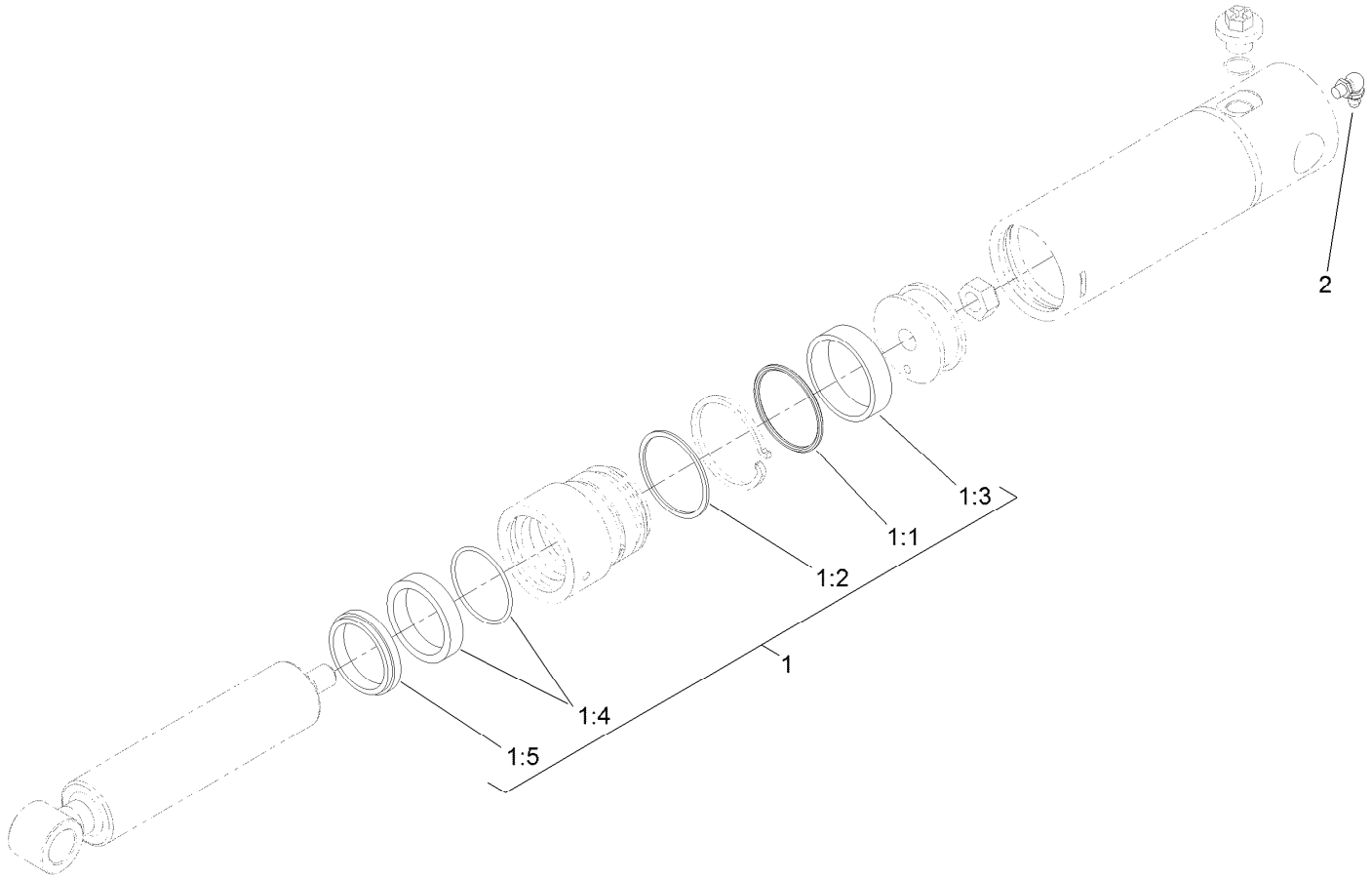

Lift Cylinder Assembly No. 120-8802

Ref.	*Part Number*	*Qty.*	*Description*
1	125-4301	1	Seal Kit
1:1		1	O-Ring ●
1:2		1	Backup ●
1:3		1	Wear Ring ●
1:4		1	Bds Seal ●
1:5		1	Dust Seal ●
2	302-60	1	Fitting-Grease

● Not serviced separately

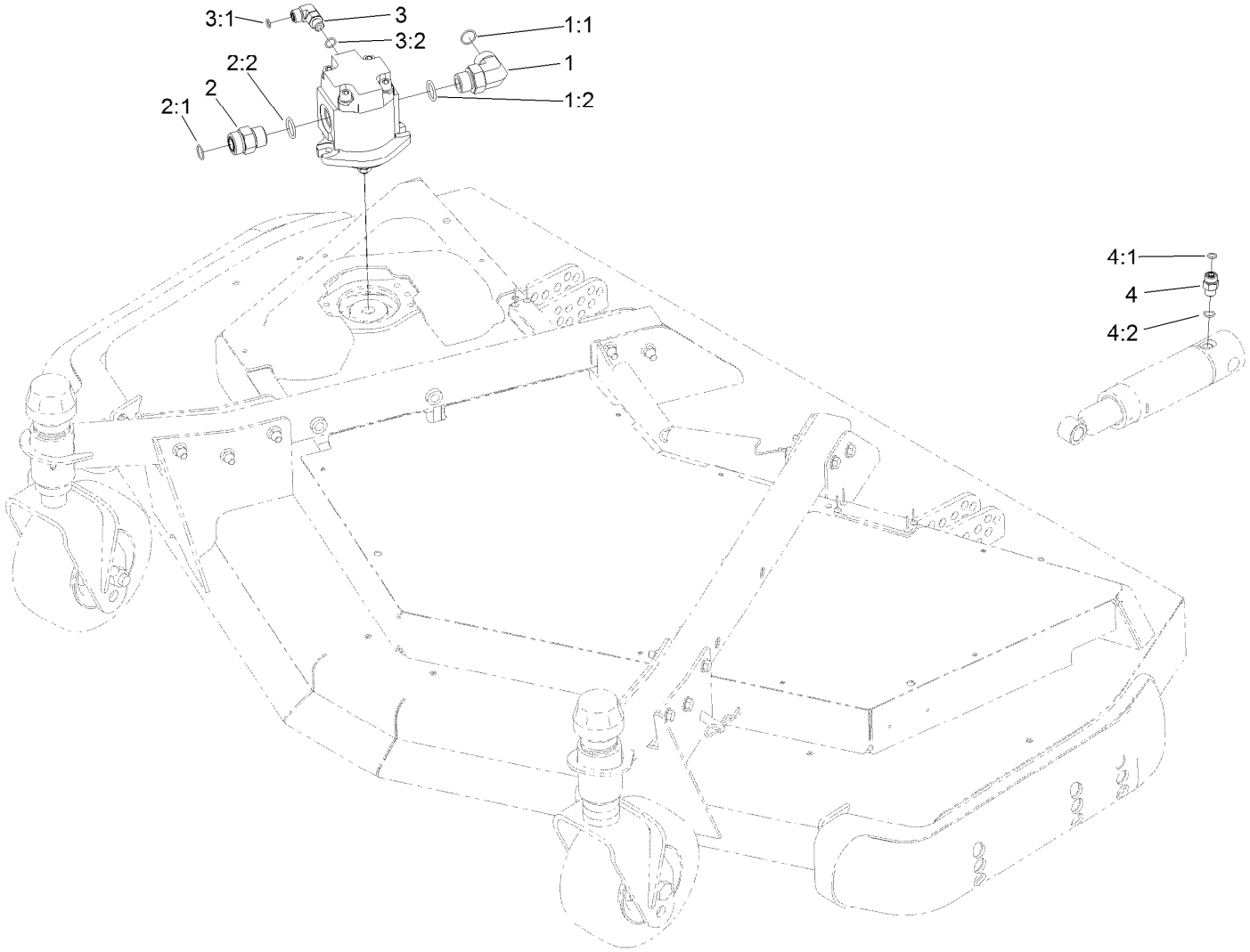

Front Deck Hydraulic Fitting Assembly

Ref.	*Part Number*	*Qty.*	*Description*
1	340-142	1	Fitting-Elbow, 90 DEG
1:1	237-58	1	O-Ring
1:2	237-81	1	O-Ring
2	340-9	1	Fitting-STR
2:1	237-58	1	O-Ring
2:2	237-81	1	O-Ring
3	340-77	1	Fitting-Elbow, 90 DEG
3:1	237-22	1	O-Ring
3:2	237-42	1	O-Ring
4	340-2	2	Fitting-Straight
4:1	237-22	1	O-Ring
4:2	237-42	1	O-Ring

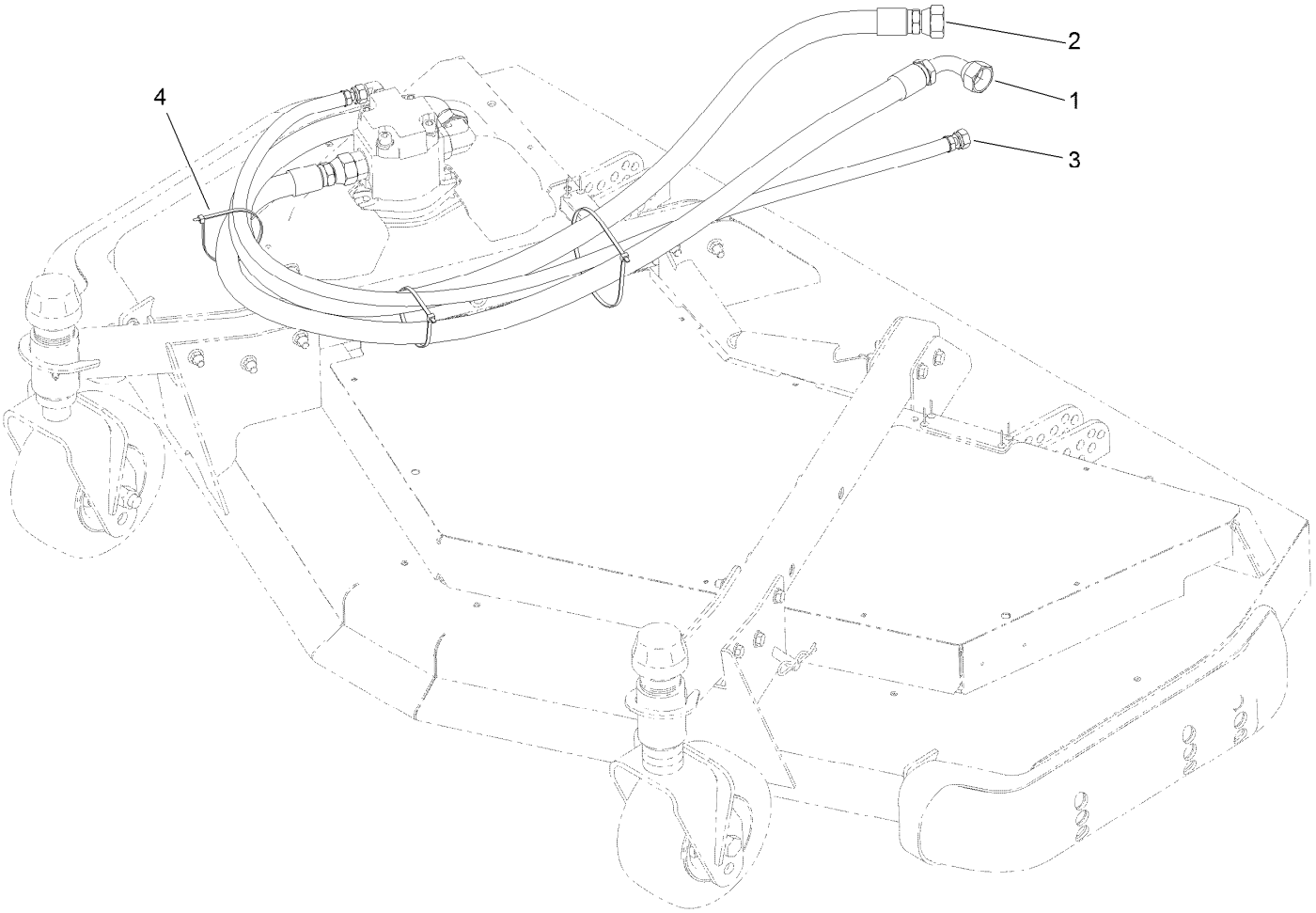

Front Deck Hose Routing Assembly

Ref.	Part Number	Qty.	Description
1	120-8987	1	Hose-HYD
2	120-8988	1	Hose-HYD
3	120-8989	1	Hose-HYD
4	3290-379	3	Tie-Cable

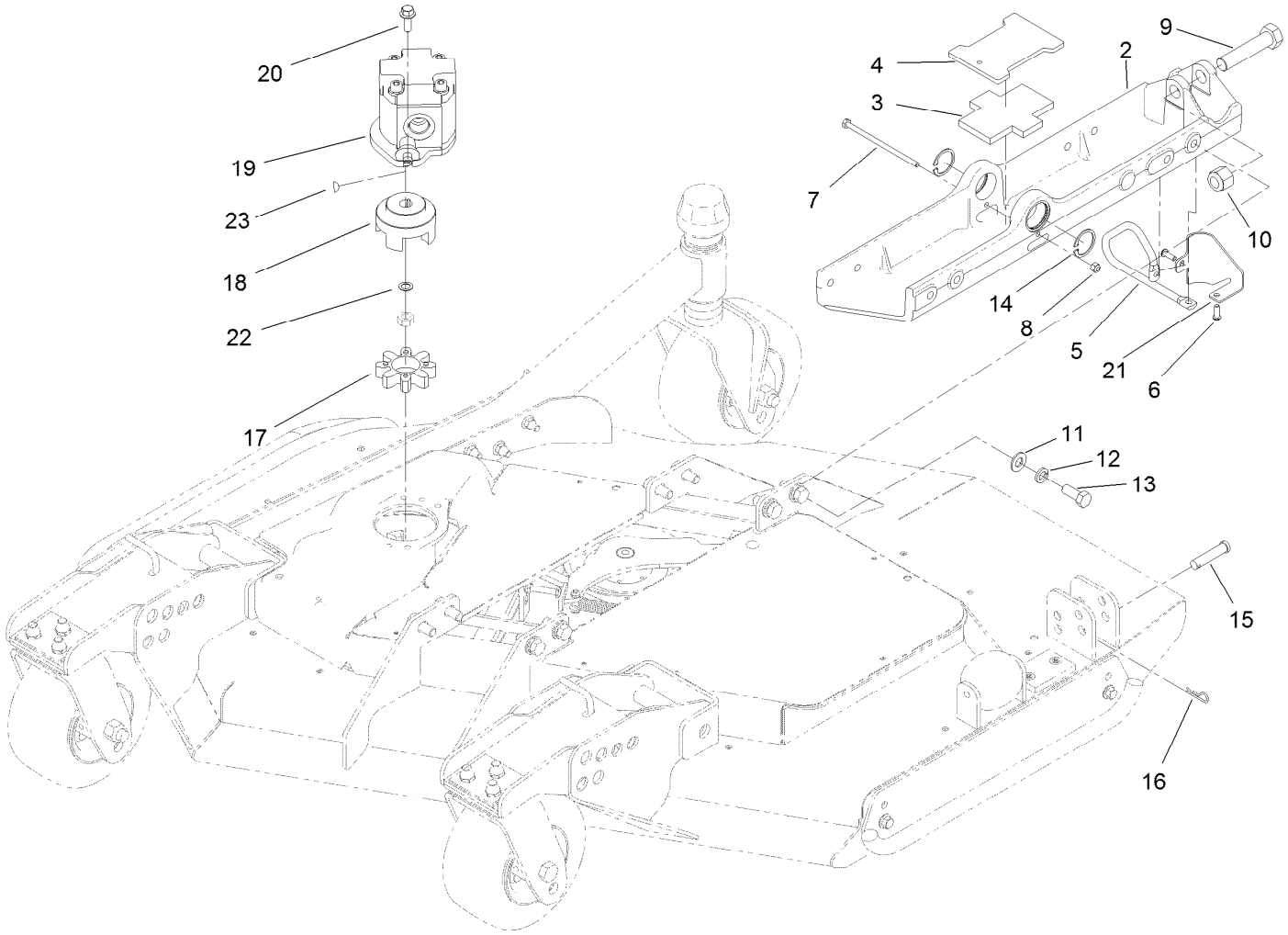

Right Deck Mount Assembly

Ref.	Part Number	Qty.	Description
2	107-4348-03	1	Mount-Deck, RH
3	104-8348	1	Plate-Rubber
4	108-1528-03	1	Plate
5	108-1529	1	Support-Hose
6	3274-69	2	Screw-HSBH
7	321-47	1	Screw-HH
8	3296-42	1	Nut-Lock, NI
9	328-5	1	Screw-HH
10	3296-51	1	Nut-Lock, NI
11	3256-26	8	Washer-Flat
12	3253-7	8	Washer-Lock

Ref.	Part Number	Qty.	Description
13	325-5	8	Screw-HH
14	32120-42	2	Ring-Retaining
15	92-2739	1	Pin-Clevis
16	3290-467	1	Pin-Hair
17	104-3542	1	Spider
18	104-3541	1	Hub-Spider
19	127-3694	1	HYD Motor ASM
20	3234-42	2	Screw-HHF
21	120-0480-03	1	Guide-Hose, RH
22	112-6957	1	Washer-Hardened
23	3257-3	1	Key-Woodruff

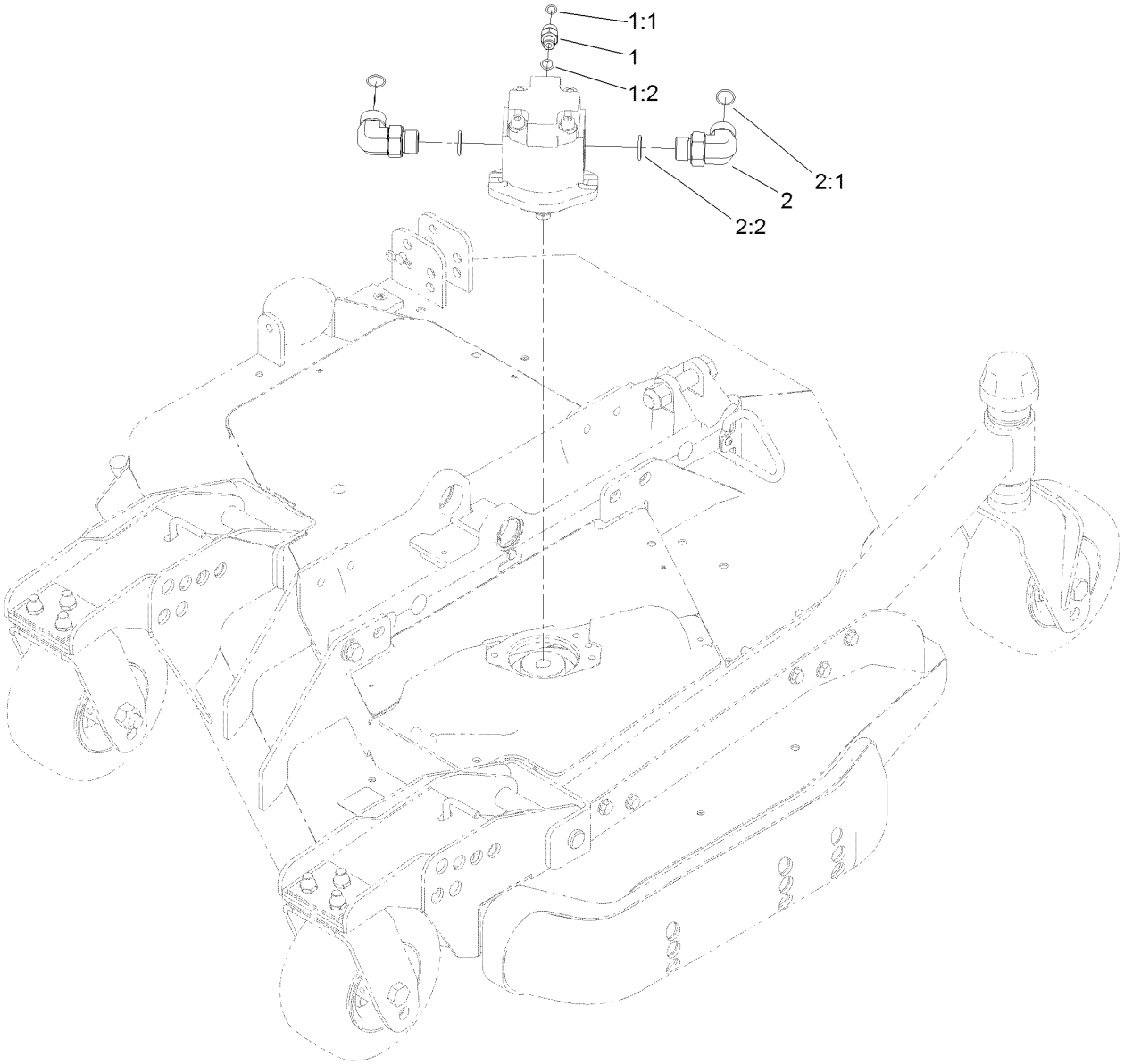

Left Deck Hydraulic Fitting Assembly

Ref.	*Part Number*	*Qty.*	*Description*
1	340-2	1	Fitting-Straight
1:1	237-22	1	O-Ring
1:2	237-42	1	O-Ring
2	340-142	2	Fitting-Elbow, 90 DEG
2:1	237-58	1	O-Ring
2:2	237-81	1	O-Ring

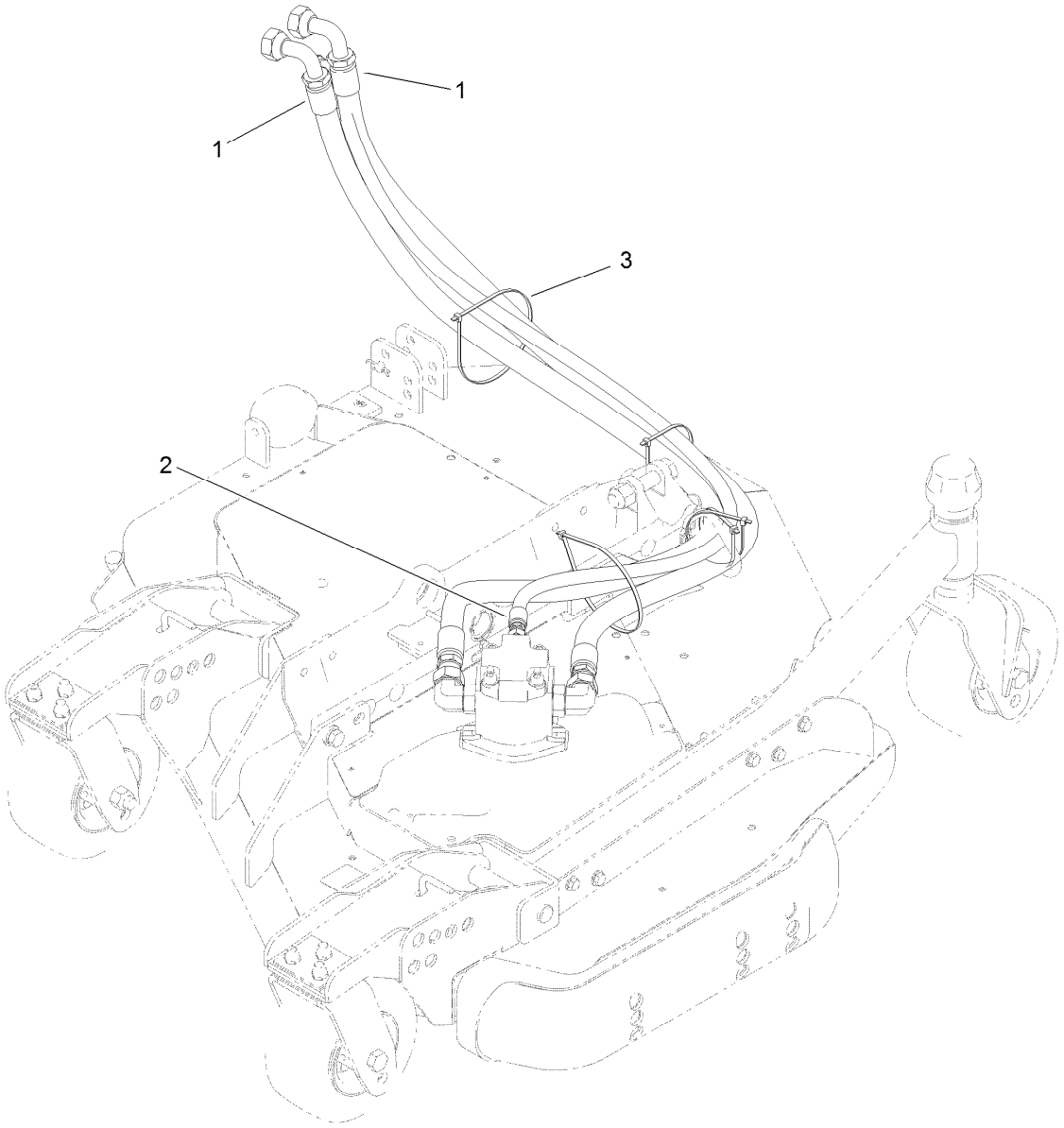

Left Deck Hose Assembly

Ref.	Part Number	Qty.	Description
1	120-8959	2	Hose-HYD
2	104-2265	1	Hose-HYD
3	3290-379	5	Tie-Cable

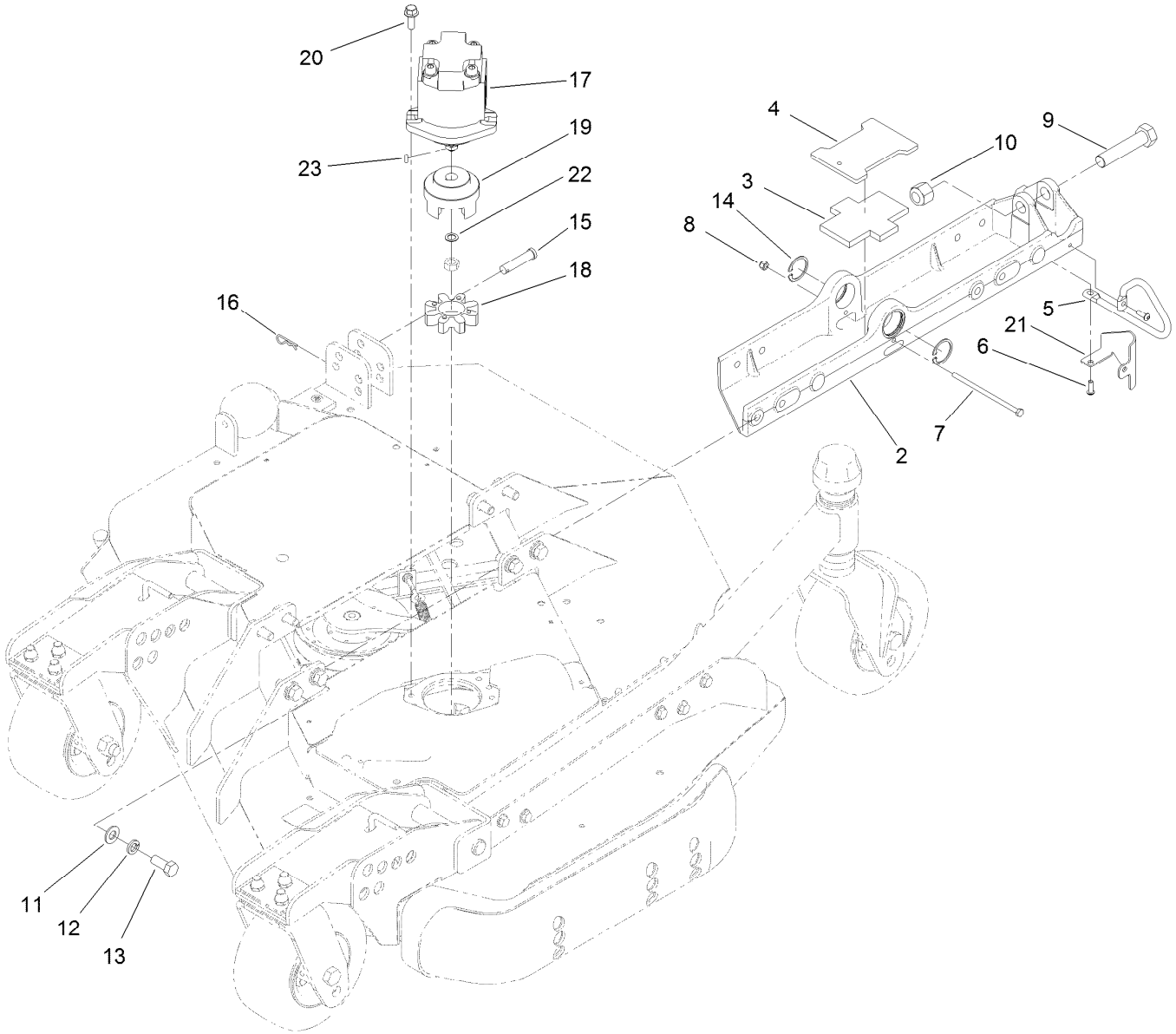

Left Deck Mount Assembly

Ref.	Part Number	Qty.	Description
2	107-4349-03	1	Mount-Deck, LH
3	104-8348	1	Plate-Rubber
4	108-1528-03	1	Plate
5	108-1529	1	Support-Hose
6	3274-69	2	Screw-HSBH
7	321-47	1	Screw-HH
8	3296-42	1	Nut-Lock, NI
9	328-5	1	Screw-HH
10	3296-51	1	Nut-Lock, NI
11	3256-26	8	Washer-Flat
12	3253-7	8	Washer-Lock

Ref.	Part Number	Qty.	Description
13	325-5	8	Screw-HH
14	32120-42	2	Ring-Retaining
15	92-2739	1	Pin-Clevis
16	3290-467	1	Pin-Hair
17	127-3694	1	HYD Motor ASM
18	104-3542	1	Spider
19	104-3541	1	Hub-Spider
20	3234-42	2	Screw-HHF
21	120-0481-03	1	Guide-Hose, LH
22	112-6957	1	Washer-Hardened
23	3257-3	1	Key-Woodruff

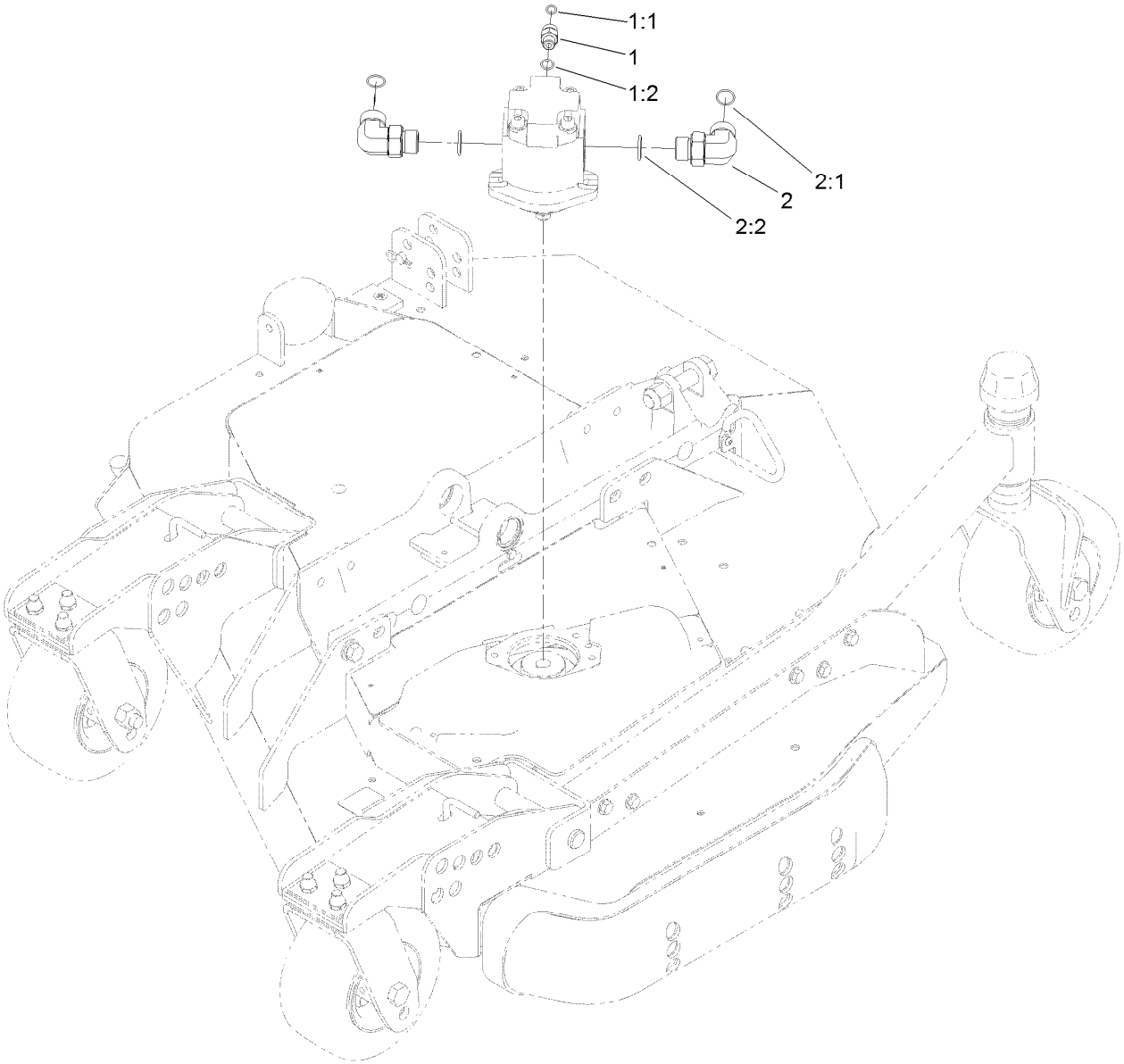

Left Deck Hydraulic Fitting Assembly

Ref.	*Part Number*	*Qty.*	*Description*
1	340-2	1	Fitting-Straight
1:1	237-22	1	O-Ring
1:2	237-42	1	O-Ring
2	340-142	2	Fitting-Elbow, 90 DEG
2:1	237-58	1	O-Ring
2:2	237-81	1	O-Ring

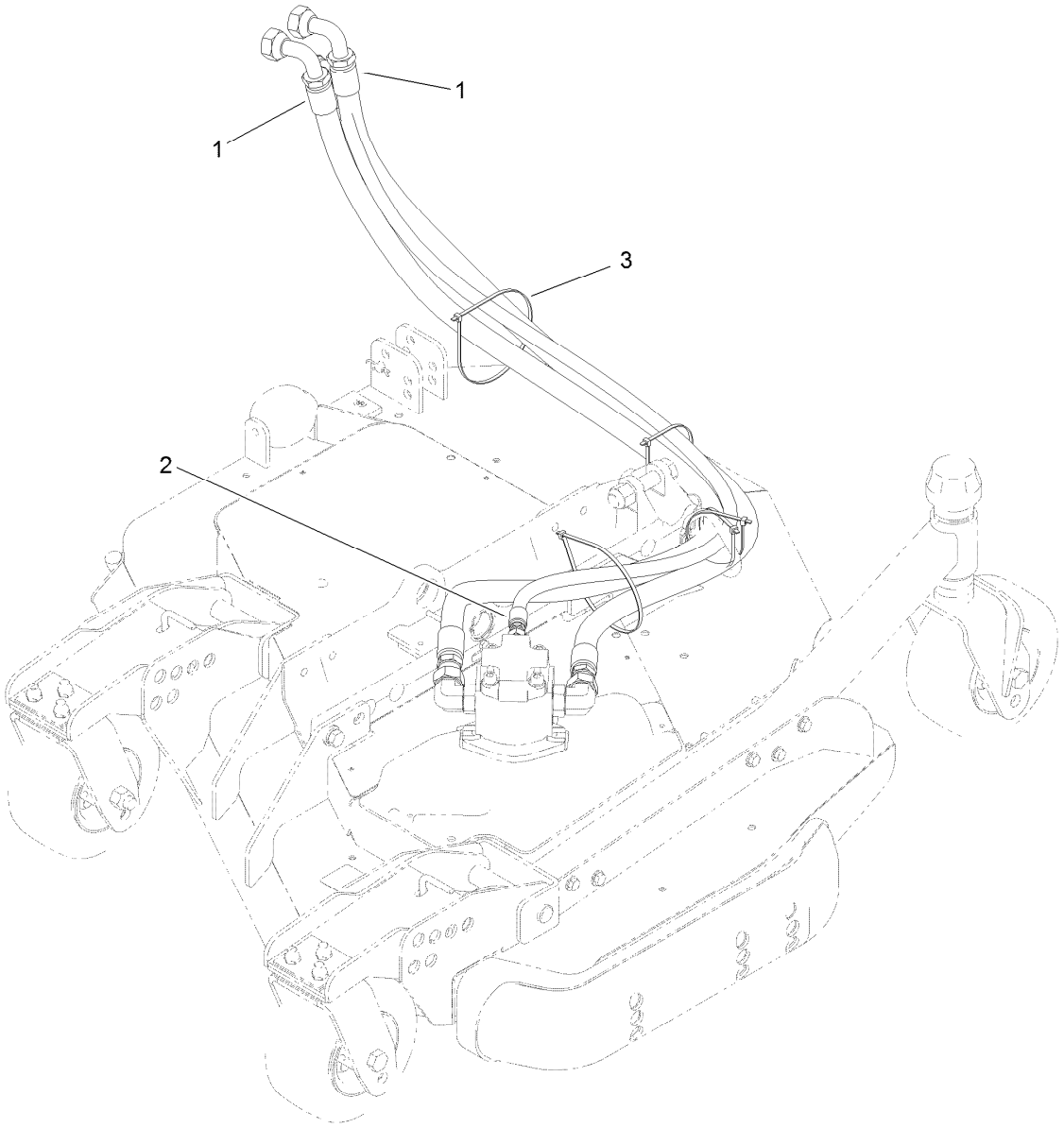

Left Deck Hose Assembly

Ref.	Part Number	Qty.	Description
1	120-8959	2	Hose-HYD
2	104-2265	1	Hose-HYD
3	3290-379	5	Tie-Cable

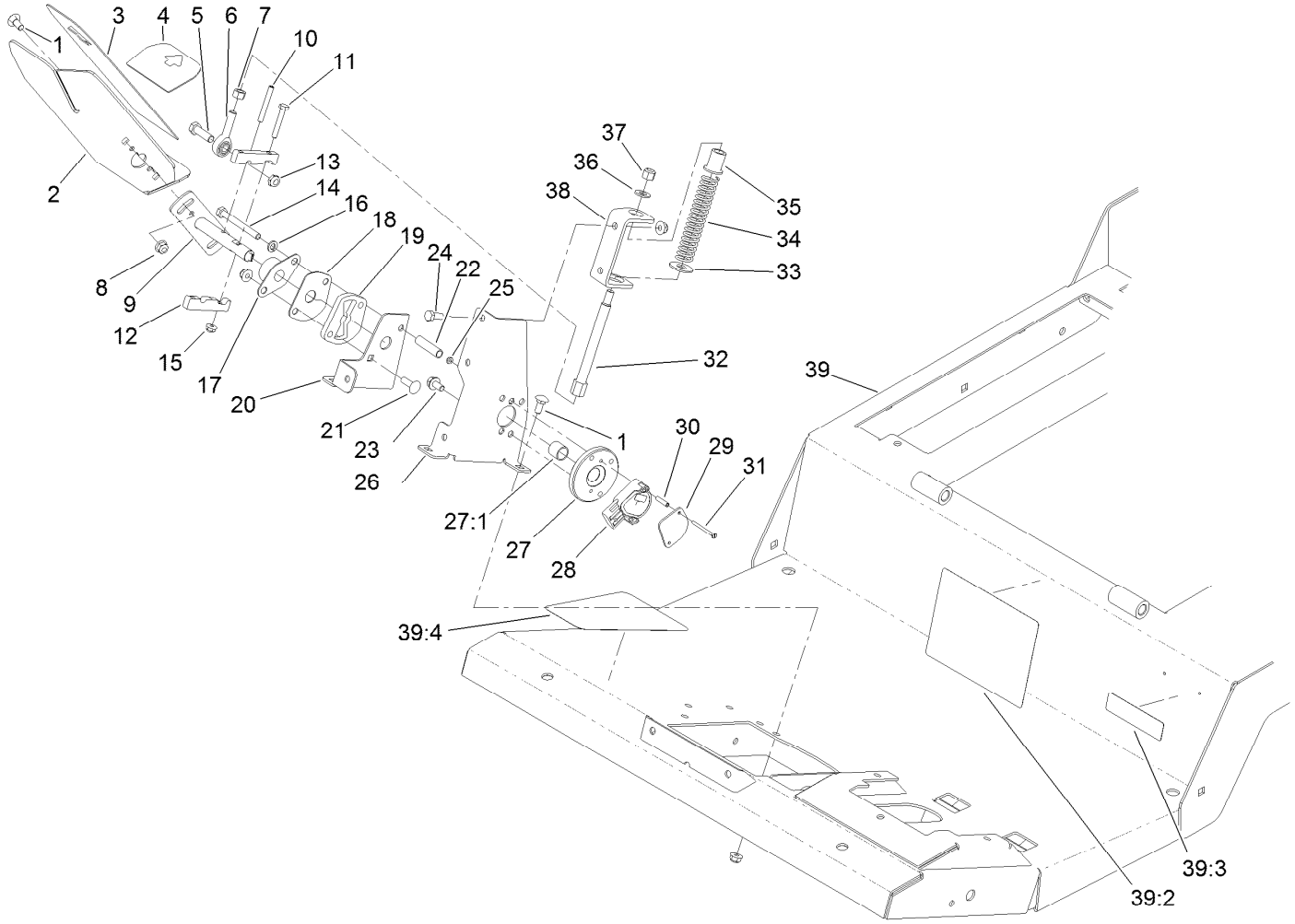

Traction Pedal and Platform Assembly

Ref.	Part Number	Qty.	Description
1	3230-1	6	Bolt-CARR
2	110-5986-01	1	Pedal-Traction
3	93-5347	1	Abrasive-Pedal
4	93-5368	1	Abrasive-Pedal
5	323-7	1	Screw-HH
6	2411-36	1	Bearing-End, Rod
7	3219-3	1	Nut-Hex
8	104-8300	10	Nut-HF, NI
9	117-5450	1	Shaft-Pedal, Traction
10	32121-78	1	Pin-Roll
11	321-37	2	Screw-HH
12	117-5459	2	Block-Clamp
13	3296-59	1	Nut-Lock, NI
14	322-14	1	Screw-HH
15	104-7201	2	Nut-HF, NI
16	3253-4	1	Washer-Lock
17	256-236	1	Bearing-Mount, Flange
18	117-5455	1	Plate-Cover
19	117-5454	1	Plate-Butterfly
20	117-5453-01	1	Bracket-Butterfly
21	3230-22	1	Screw-CARR

Ref.	Part Number	Qty.	Description
22	93-7960	1	Spacer
23	114-7728	2	Screw-HHF, Patch
24	322-3	3	Screw-HH
25	3296-9	2	Nut-Hex
26	117-5451-01	1	Bracket-Sensor
27	117-5445	1	Bushing Hub ASM
27:1	95-7497	1	Bushing-Wheel
28	114-5609	1	Sensor-Position
29	114-5595	1	Plate-Capture
30	114-5608	2	Spacer-Standoff
31	32105-25	2	Screw-SHH
32	117-5446	1	Shaft-Spring
33	3256-5	1	Washer-Flat
34	84-9100	1	Spring
35	92-7610	1	Retainer-Spring
36	3256-24	1	Washer-Plain
37	3296-6	1	Nut-Lock
38	117-5452-01	1	Bracket-Spring
39	120-4087	1	Platform ASM
39:2	114-0846	1	Decal-Instructions, Operating

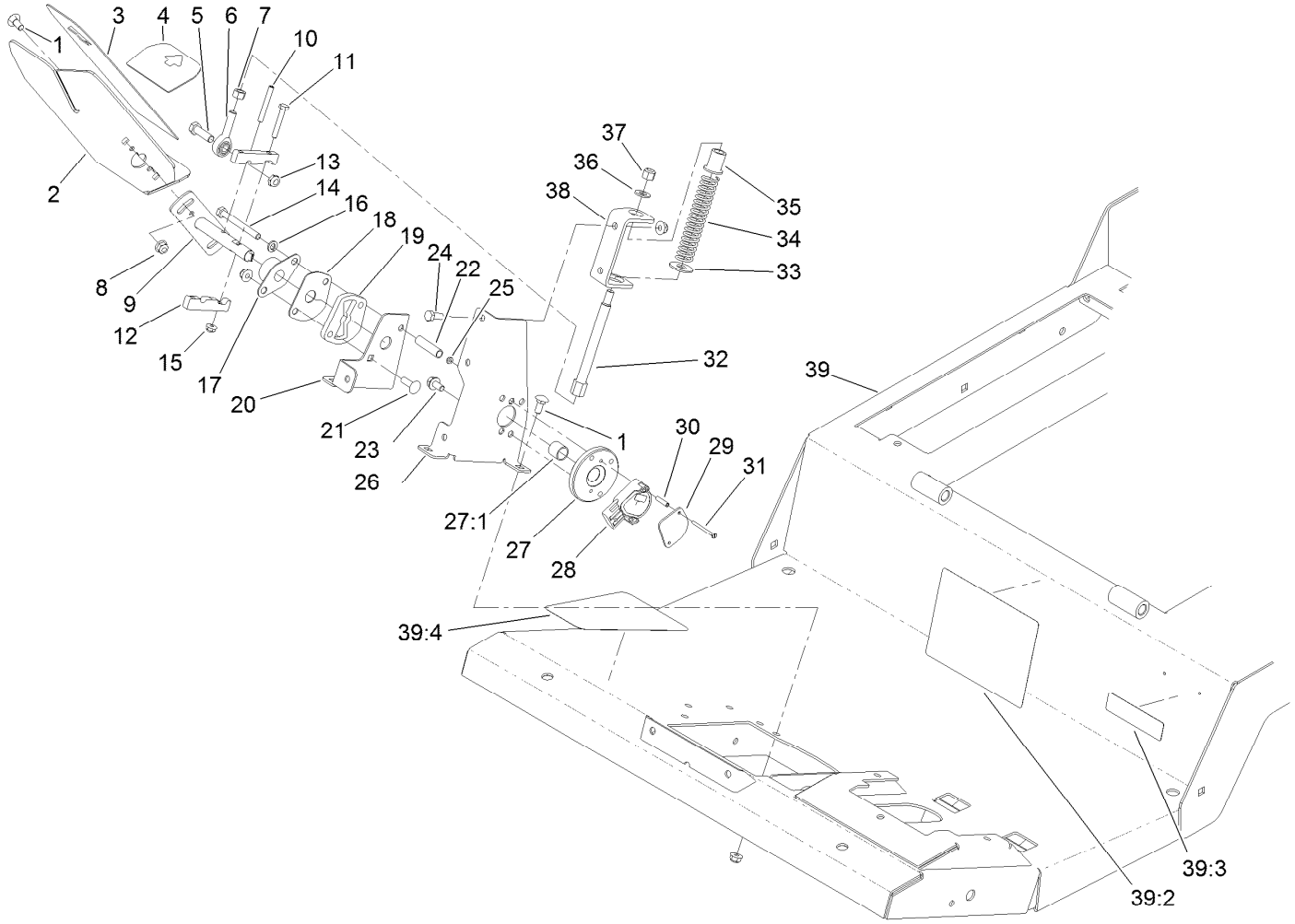

Traction Pedal and Platform Assembly (continued)

Ref.	*Part Number*	*Qty.*	*Description*
39:3	117-2718	1	Decal-Arrester, Spark
39:4	114-0849	1	Decal-Pedal, Traction

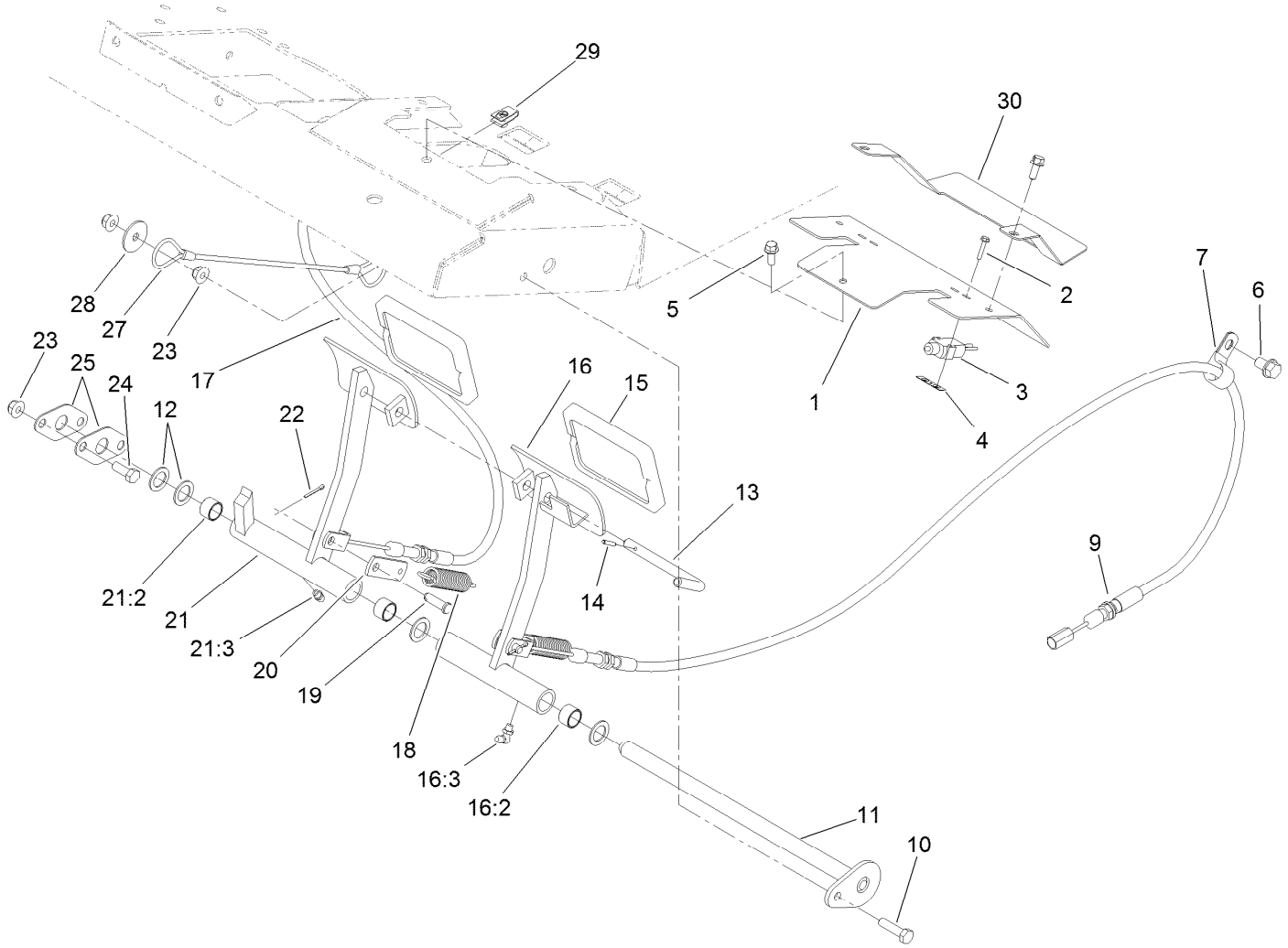

Brake Pedal Assembly

Ref.	Part Number	Qty.	Description
1	120-4163-01	1	Cover-Brake
2	117-5458	4	Screw-HHF
3	99-3410	2	Switch
4	108-9824	2	Nut-Switch
5	3234-33	3	Screw-HHF
6	32144-69	2	Screw-HWHTF
7	2412-4	2	Clamp-R
9	120-8899	1	Cable-Brake, LH
10	322-6	1	Screw-HH
11	120-4167	1	Pin-Flag
12	3256-69	4	Washer-Flat
13	63-7880	1	Pin-Latch, Brake
14	32121-50	1	Pin-Spring
15	93-8742	2	Footpad-Brake
16	120-4170	1	LH Brake Pedal ASM
16:2	256-42	2	Bushing

Ref.	Part Number	Qty.	Description
16:3	302-60	1	Fitting-Grease
17	120-8898	1	Cable-Brake, RH
18	93-5262	2	Spring-Extension
19	283-61	2	Pin-Yoke
20	100-5540	2	Strap-Brake
21	75-1430	1	RH Brake Pedal ASM
21:2	256-42	2	Bushing
21:3	302-5	1	Fitting-Grease
22	3272-6	2	Pin-Cotter
23	104-8300	4	Nut-HF, NI
24	322-4	2	Screw-HH
25	120-4168	2	Plate-Support
27	110-4896	1	Lanyard
28	3256-57	1	Washer-Flat
29	107069	3	Clip
30	121-1596-01	1	Cover-Brakes

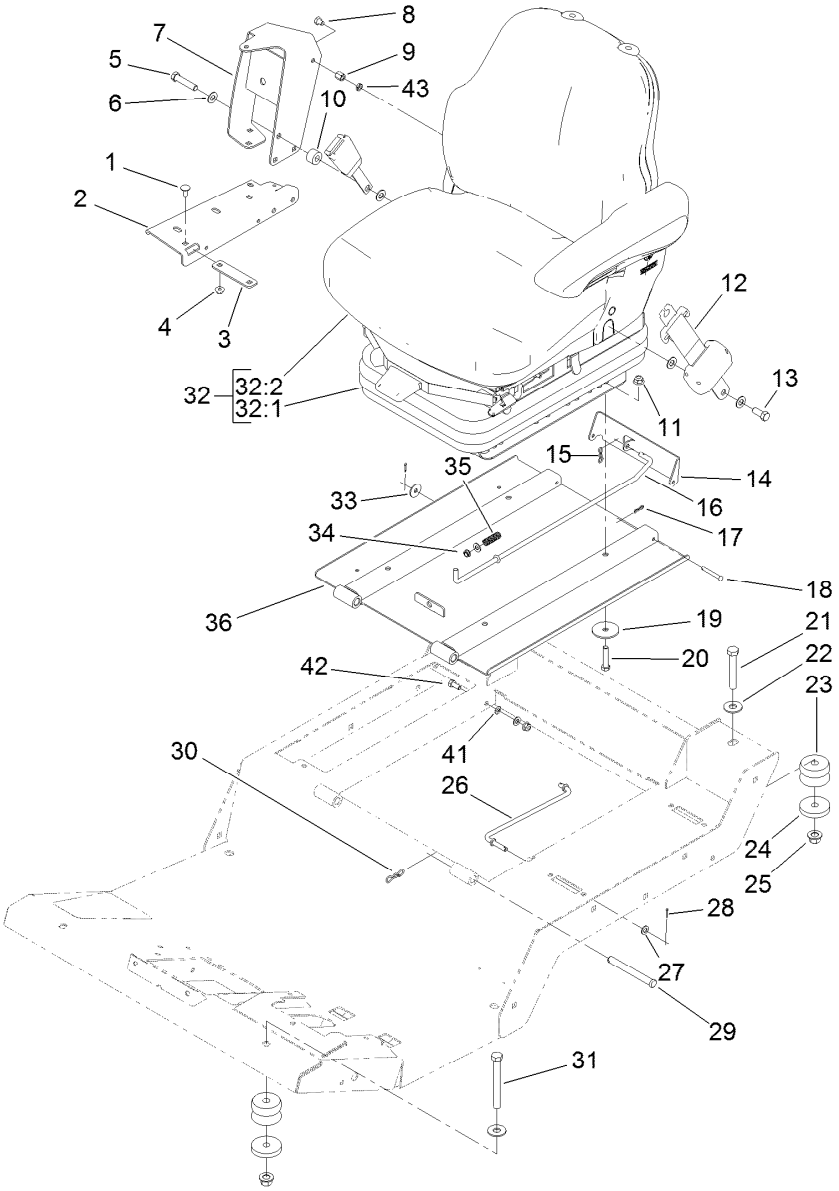

Seat Base and Seat Assembly

Ref.	Part Number	Qty.	Description
1	3230-23	6	Bolt-CARR
2	119-0000-03	1	Channel-Support
3	112-7449-03	1	Bracket-Support
4	104-8300	7	Nut-HF, NI
5	3212-8	1	Screw-HH
6	3256-25	4	Washer-Flat
7	117-4798-03	1	Arm-Support
8	108-8646	1	Screw-HH, Lock
9	112-7405	1	Nut-Hex, Coupling
10	17-7190	1	Spacer-Finger
11	104-8301	4	Nut-HF, NI
12	110-0413	1	Seatbelt-Retractable
13	3212-4	1	Screw-HH
14	120-9017-03	1	Latch-Seat
15	119-1415	1	Pin-Cotter, Locking
16	120-9018	1	Rod-Latch
17	119-1414	2	Pin-Cotter, Locking
18	283-57	2	Pin-Clevis
19	83-1040	4	Washer-Flat
20	323-9	4	Screw-HH
21	112-7264	2	Screw-HH

Ref.	Part Number	Qty.	Description
22	3256-6	4	Washer-Flat
23	110-5954	4	Mount-Center, Bonded
24	115-5519	4	Washer-Plain
25	99-5107	4	Nut-Lock
26	93-5338	1	Rod-Prop
27	3256-23	3	Washer-Plain
28	3272-5	2	Pin-Cotter
29	283-83	2	Pin-Clevis
30	119-1416	2	Pin-Cotter, Locking
31	702093	2	Screw-HH
32	117-9428	1	Seat / Suspension ASM
32:1	108-1488	1	Seat Suspension ASM
32:2	117-9429	1	Matrix Cloth Seat ASM
33	3256-82	1	Washer-Flat
34	5979	1	Bushing-Nyliner
35	95-1821-03	1	Spring-Compression
36	120-4078-03	1	Plate-Seat
41	3255-8	1	Washer-Lock
42	322-3	1	Screw-HH
43	117-4059	1	Nut-Hex

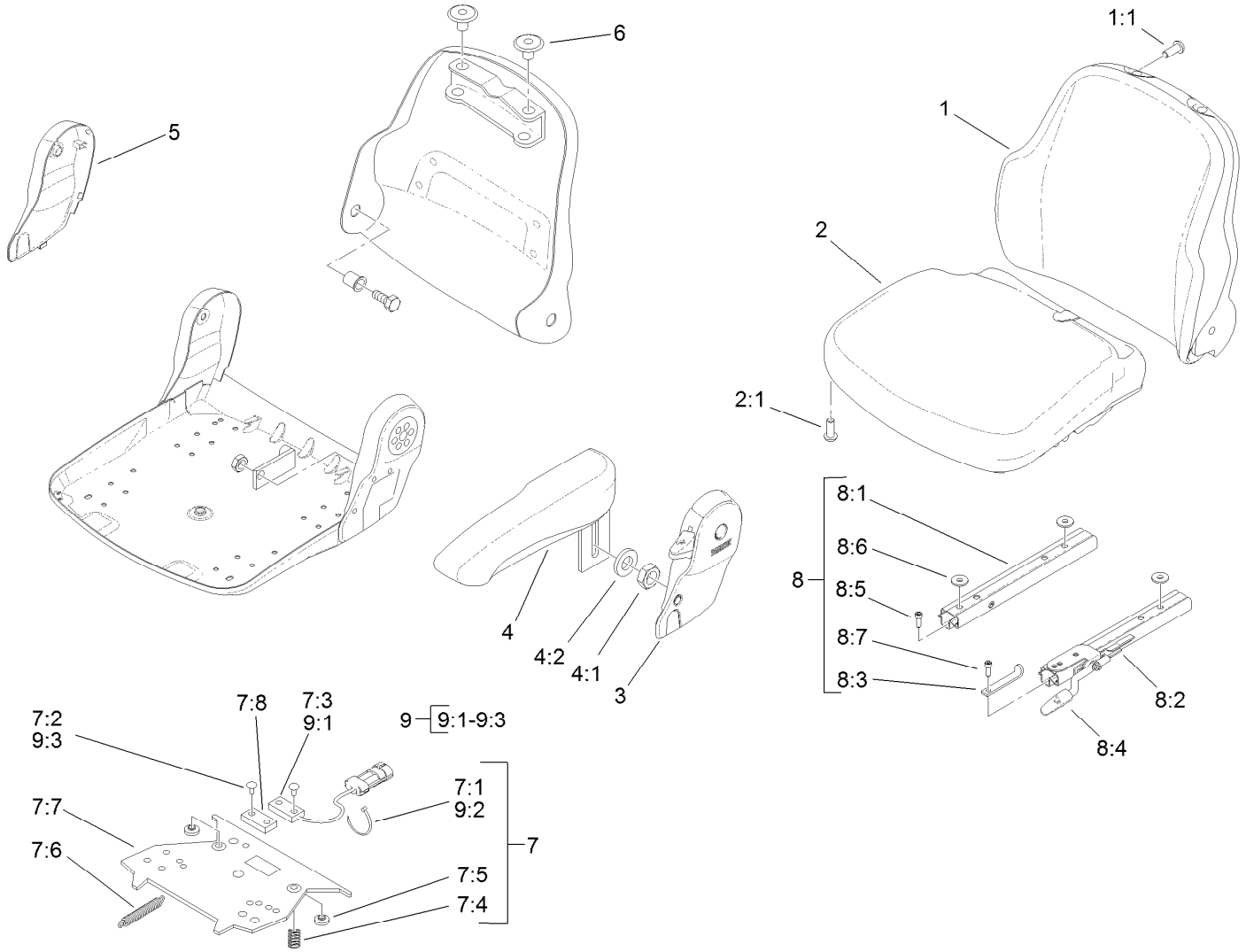

Cloth Premium Seat Assembly No. 117-9429

Ref.	Part Number	Qty.	Description
1	117-9415	1	Backrest Cushion ASM Matrix Cloth
1:1	119-7742	4	Screw-Cushion
2	117-9416	1	Seat Cushion ASM Matrix Cloth
2:1	119-7742	3	Screw-Cushion
3	108-8018	1	Cover-Armrest
4	108-8019	1	LH Armrest ASM
4:1	82-9650	1	Nut
4:2	107-1198	1	Washer
5	108-8021	1	Cover-Armrest
6	108-8022	2	Cover-Black
7	108-8024	1	Switch Kit
7:1		3	Wire Tie ●
7:2		4	Rivet ●
7:3		1	Sensor-Seat Switch ●
7:4		2	Spring-Compression ●
7:5		2	Bumper-Pressure Plate ●
7:6		1	Spring-Extension ●
7:7		1	Plate-Mounting ●
7:8		1	Magnet ●
8	108-8025	1	Adjustment Rail Set
8:1		1	Rail-Adjustment, RH ●
8:2		1	Rail-Adjustment, LH ●
8:3		1	Stop-Rail ●
8:4		1	Handle ●
8:5		3	Screw ●
8:6		3	Washer ●
8:7		1	Screw ●
9	110-6189	1	Switch Kit
9:1		1	Switch ●
9:2		3	Wire Tie ●
9:3		2	Rivet ●

● Not serviced separately

Air Ride Seat Suspension Assembly No. 108-1488

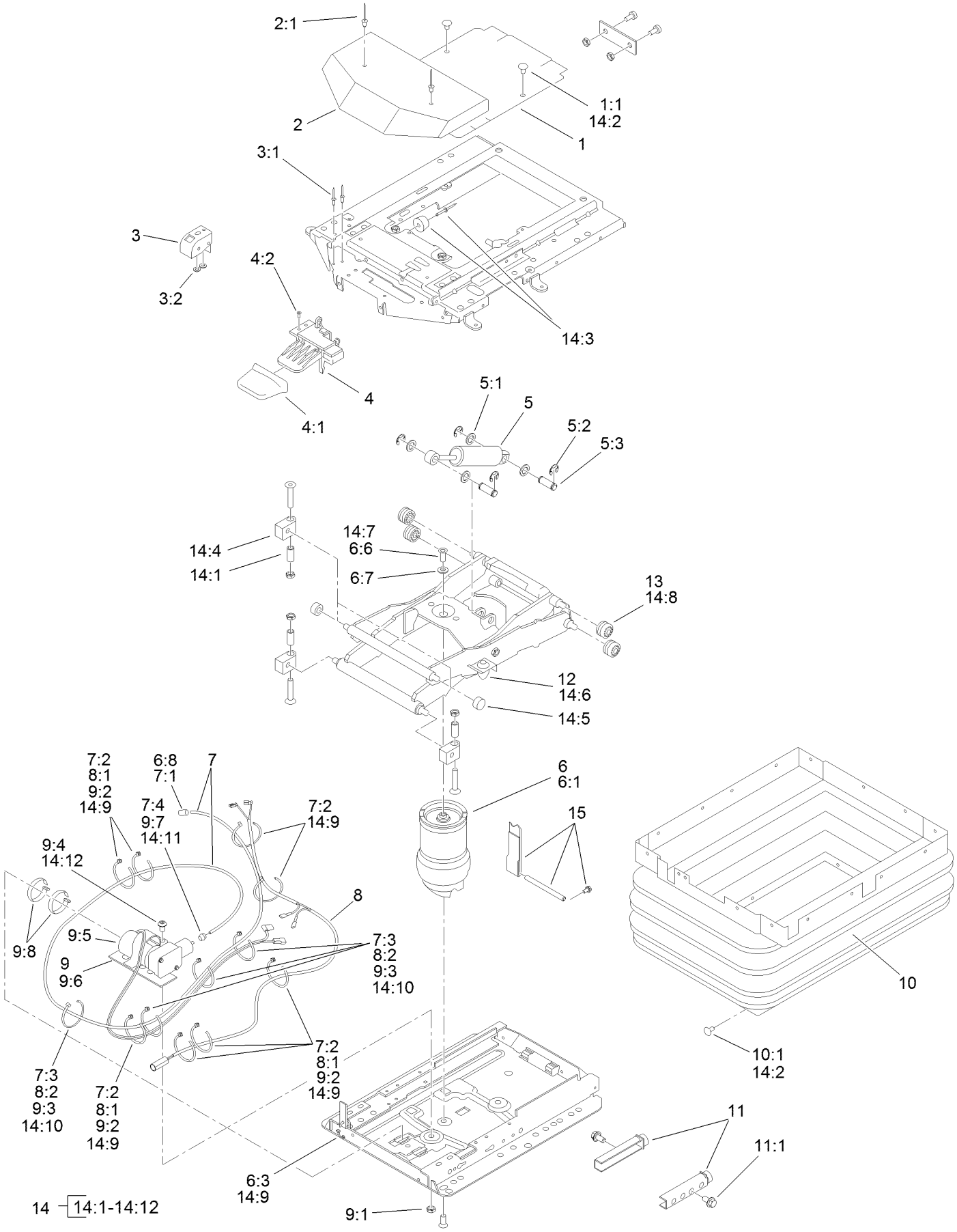

Air Ride Seat Suspension Assembly No. 108-1488 (continued)

Ref.	Part Number	Qty.	Description
1	108-8026	1	Cover ASM
1:1	39-5710	2	Plug-Plastic
2	108-8027	1	Cover
2:1		2	Rivet ■
3	108-8028	1	Level Indicator Kit
3:1		2	Rivet ■
3:2		2	Washer ■
4	108-8029	1	Valve-Control, Air
4:1		1	Handle ■
4:2		3	Screw ■
5	108-8030	1	Shock Absorber Kit
5:1		4	Washer ■
5:2		4	C-Clip ■
5:3		2	Pin ■
6	108-8031	1	Air Spring Kit
6:1		1	Air Spring ■
6:3		2	Cable Tie ■
6:6		2	Screw ■
6:7		1	Washer ■
6:8		1	Nipple-Hose ■
7	108-8032	1	Air Tube ASM
7:1		1	Nipple-Hose ■
7:2		7	Tie-Wire ■
7:3		4	Tie-Wire ■
7:4		1	Nipple-Hose ■
8	108-8033	1	Connecting Cable ASM
8:1		8	Tie-Wire ■
8:2		4	Tie-Wire ■
9	108-8034	1	Compressor Kit
9:1		1	Nut ■
9:2		5	Tie-Wire ■
9:3		4	Tie-Wire ■
9:4		1	Screw ■
9:5		1	Compressor ■
9:6		1	Plate-Mounting ■
9:7		1	Nipple-Hose ■
9:8		2	Clamp ■
10	108-8035	1	Bellows ASM
10:1	39-5710	23	Plug-Plastic
11	108-8036	1	Stop Kit
11:1		2	Screw ■
12	107-1213	2	Bumper Set
13	108-8037	4	Roller
14	108-8038	1	Wear Parts Kit ●
14:1		4	Spacer ■
14:2	39-5710	2	Plug-Plastic
14:3		1	Bumper ■
14:4		4	Support-Housing ■
14:5		2	Roller ■
14:6	107-1213	2	Bumper Set
14:7		2	Screw ■
14:8	108-8037	4	Roller
14:9		9	Tie-Wire ■
14:10		4	Tie-Wire ■
14:11		1	Nipple-Hose ■
14:12		1	Screw ■
15	119-2161	1	Tether Kit

● Not illustrated

■ Not serviced separately

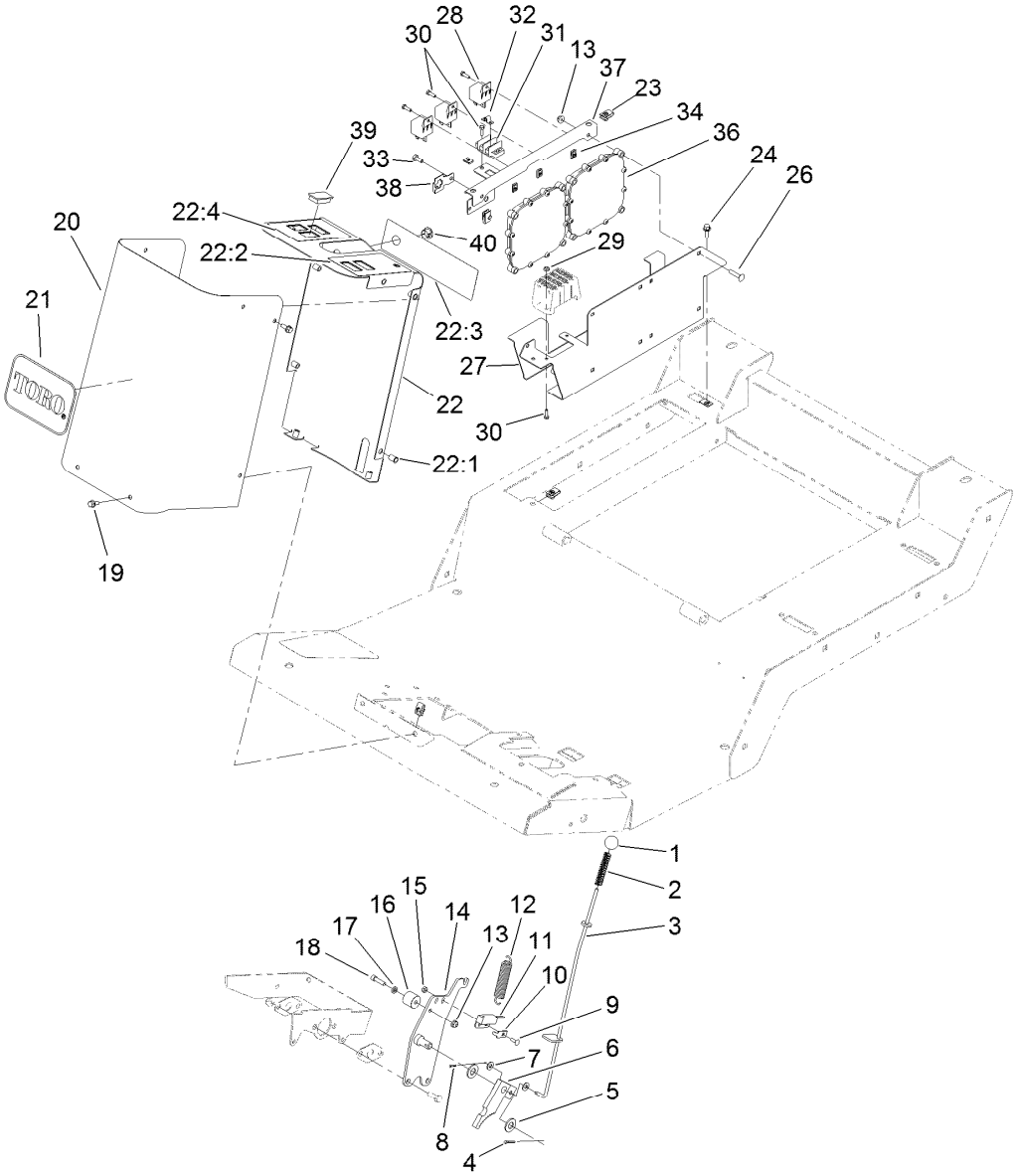

Parking Brake, Steering Tower and Power Center Assembly

Ref.	Part Number	Qty.	Description
1	233-17	1	Knob
2	71-8310	1	Spring-Compression
3	114-0195	1	Rod-Parking, Brake
4	3272-10	1	Pin-Cotter
5	3256-26	2	Washer-Flat
6	63-7900-03	1	Rack
7	3256-22	2	Washer-Flat
8	3272-5	1	Pin-Cotter
9	3229-34	1	Screw-CARR
10	100-4872	1	Plate-Switch, Neutral
11	100-1270	1	Switch-Proximity
12	13-0480	1	Spring
13	104-7201	9	Nut-HF, NI
14	114-0190-03	1	Pivot-Parking, Brake
15	3296-2	1	Nut-Lock, NI
16	117-5499	1	Spacer-Deflector
17	55-9620	1	Spacer-Plate, Pivot
18	3274-9	1	Screw-HSH
19	3234-33	10	Screw-HHF
20	120-4136-01	1	Cover-Steering Tower, Front
21	62-5550	1	Decal

Ref.	Part Number	Qty.	Description
22	120-4165	1	Steering Tower ASM
22:1	32148-6	8	Nut-Clinch
22:2	120-4130	1	Decal-Steering Tower, LH
22:3	114-0845	1	Decal-Column, Steering
22:4	120-4129	1	Decal-Steering Tower, RH
23	107069	7	Clip
24	3234-4	2	Screw-HHF
26	3229-3	8	Screw-CARR
27	120-4093-03	1	Mount-Power
28	99-7435	3	Relay
29	3296-12	2	Nut-Lock, NI
30	3290-134	7	Screw
31	42862	1	Block-Terminal, Ground
32	42863	1	Strip-Jumper
33	321-3	1	Screw-HH
34	107-1013	5	Nut-Speed
36	114-3321	2	Controller-Tec
37	120-4127-03	1	Mount-Relay
38	114-5502	1	Clip-Fuse
39	99-7420	5	Plug-Hole
40	94-5627	1	Plug

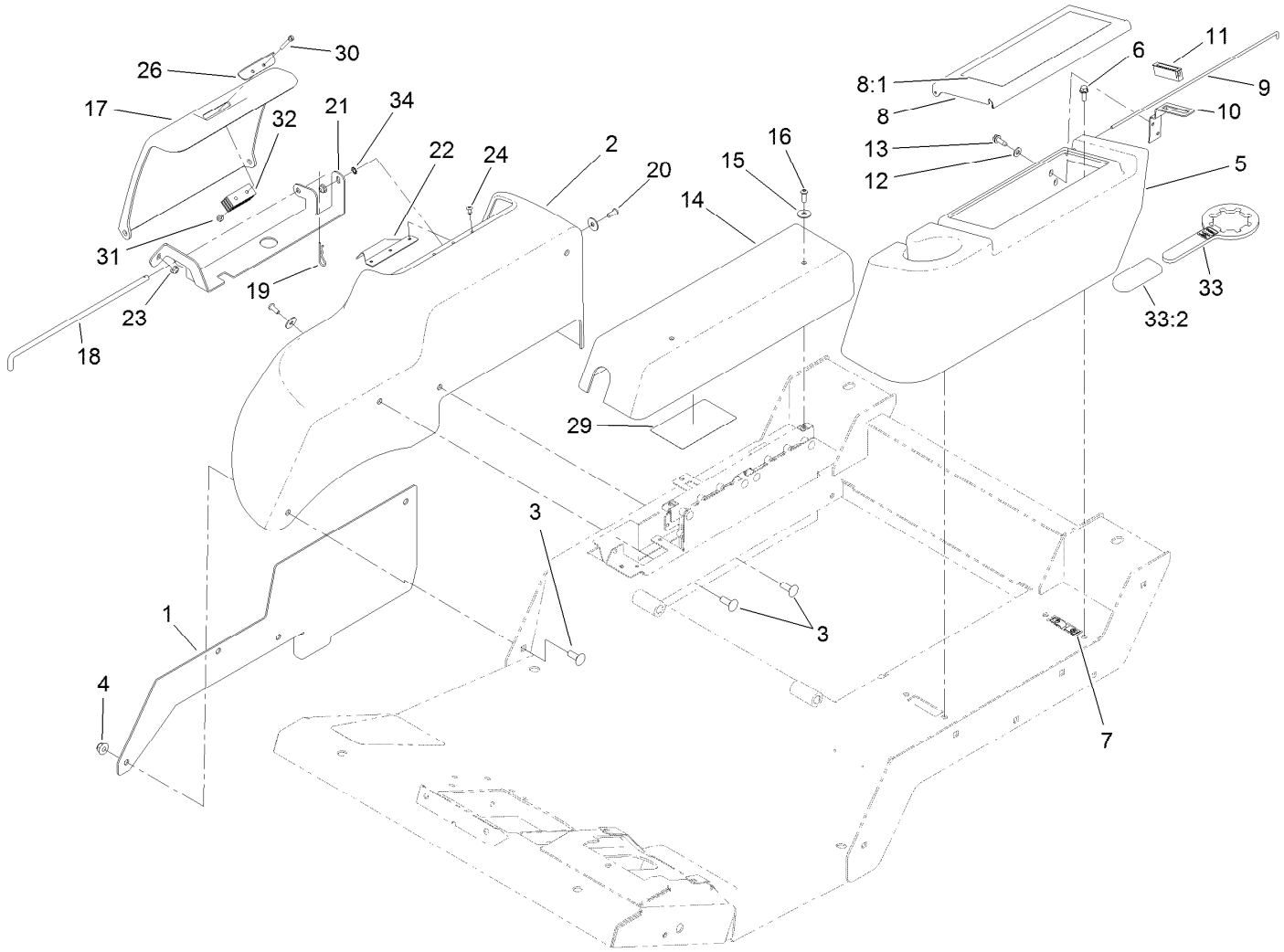

Fender, Tool Box and Cover Assembly

Ref.	Part Number	Qty.	Description
1	121-1579-03	1	Plate-Fender, RH
2	120-4113	1	Fender-RH
3	3231-22	4	Screw-CARR
4	104-8301	4	Nut-HF, NI
5	120-4125	1	Housing-Tool Box
6	3234-4	4	Screw-HHF
7	107069	4	Clip
8	120-4124	1	Tool Box Cover ASM
8:1	117-2754	1	Decal-Warning
8:1	117-2766	1	Decal-Warning, CE
9	120-4122	1	Rod-Hinge
10	104-7545	1	Bracket-Latch
11	58-4250	1	Catch-Magnetic
12	3256-22	2	Washer-Flat
13	32104-95	2	Screw-HWH
14	120-4126	1	Cover-Controllers
15	87-6630	4	Washer-Plain

Ref.	Part Number	Qty.	Description
16	3274-69	2	Screw-HSBH
17	120-4115	1	Cover-Battery
18	121-1588	1	Rod-Hinge
19	3290-467	1	Pin-Hair
20	3274-31	2	Screw-HSBH
21	121-1586-03	1	Mount-Cover
22	127-3706	1	Plate-Cover
23	104-7201	2	Nut-HF, NI
24	3269-23	3	Rivet-Pop
26	127-3705	1	Plate-Cover
29	121-1599	1	Decal-Fuses
30	32105-1	2	Screw-SHH
31	3296-2	2	Nut-Lock, NI
32	69-6260	1	Magnet
33	121-3874	1	Wrench ASM
33:2	119-1846	1	Grip
34	3255-7	1	Washer-Lock/EXT

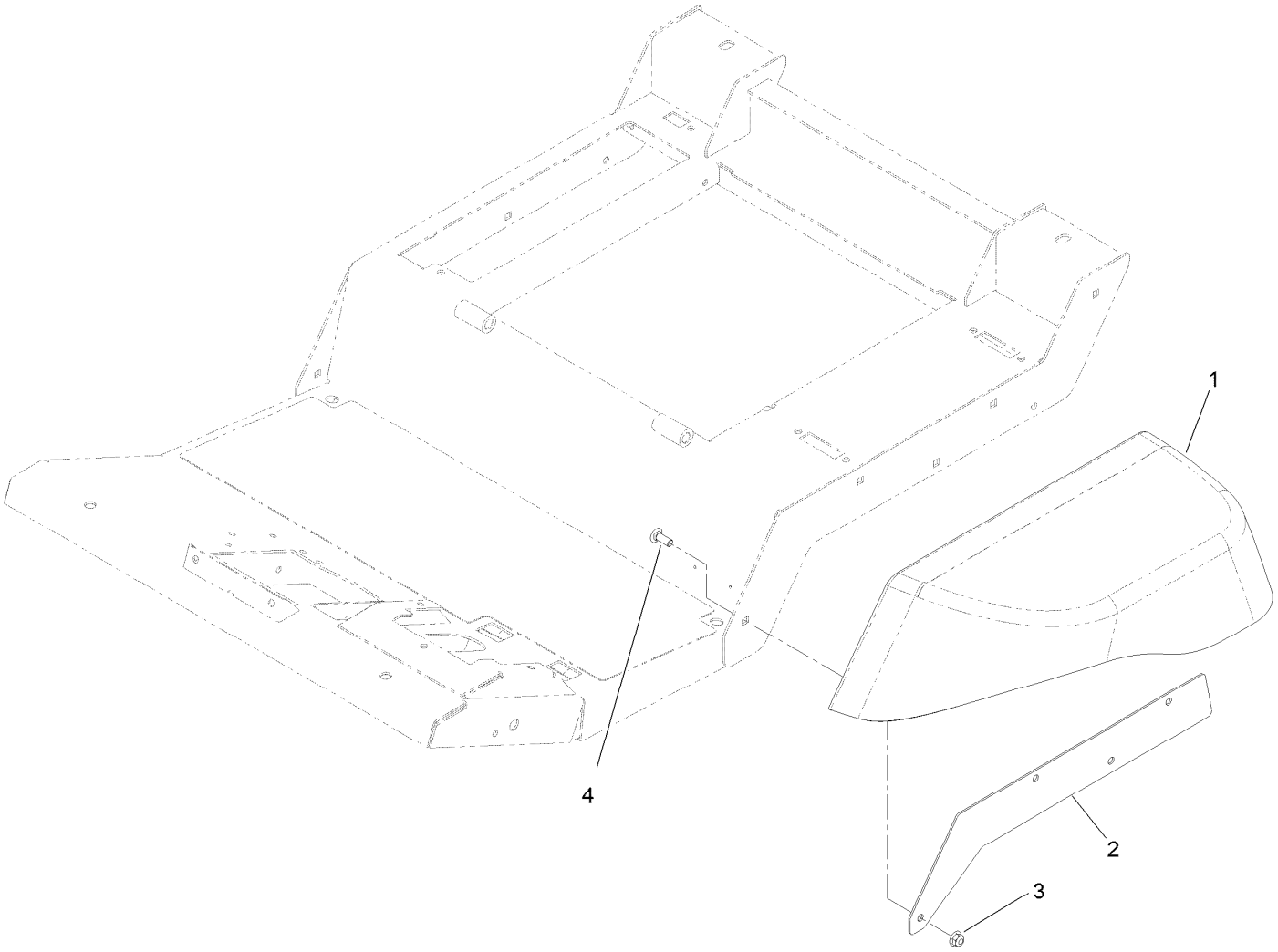

Fender Assembly

Ref.	Part Number	Qty.	Description
1	120-4114	1	Fender-LH
2	121-1580-03	1	Plate-Fender, LH
3	104-8301	4	Nut-HF, NI
4	3231-22	4	Screw-CARR

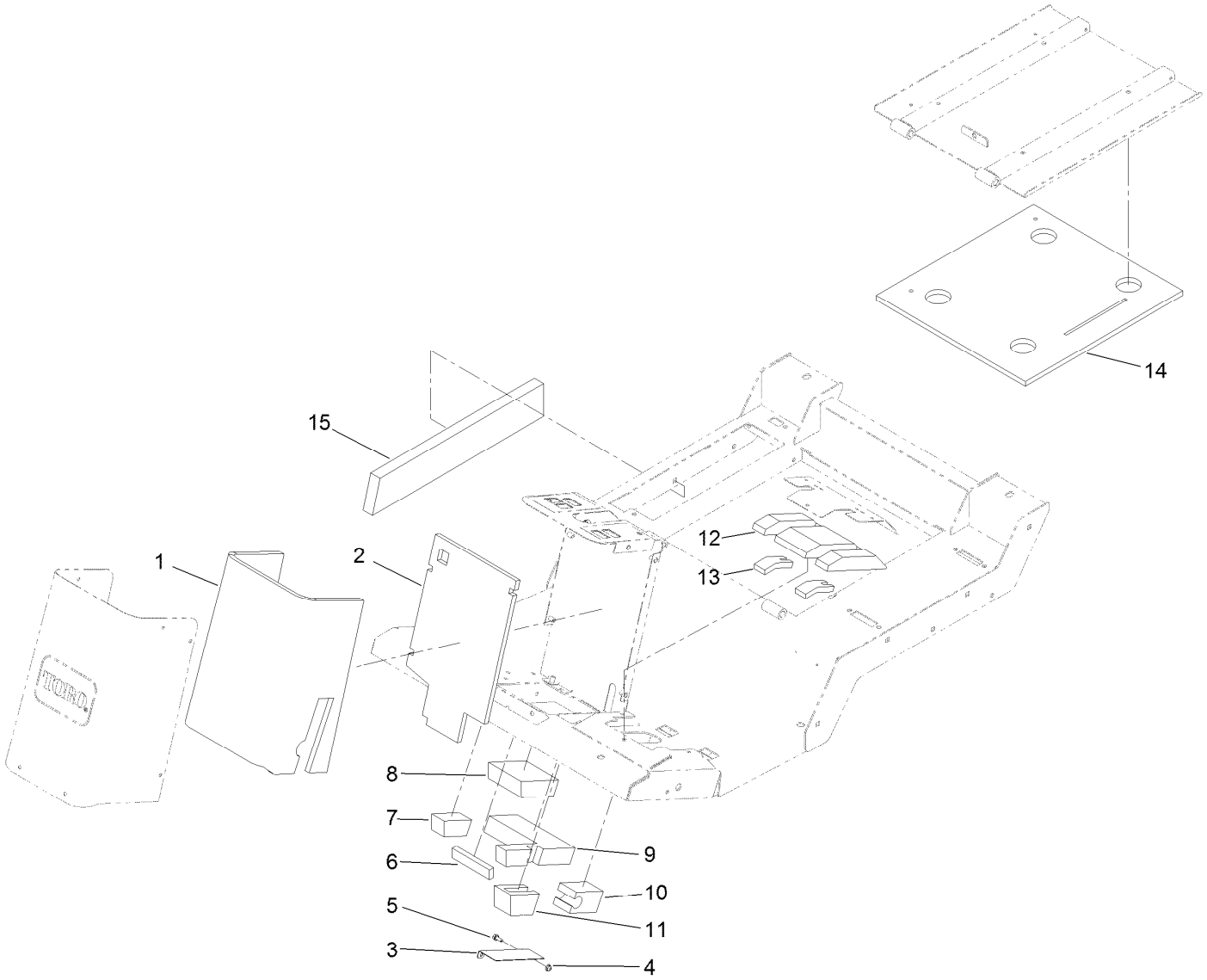

Acoustic Foam Assembly

Ref.	Part Number	Qty.	Description
1	121-1666	1	Foam-Column, Front
2	115-8813	1	Foam-Column, Rear
3	115-8841-01	1	Bracket-Foam, Pawl
4	104-7201	2	Nut-HF, NI
5	3234-33	2	Screw-HHF
6	115-8808	1	Foam-Strip, Front
7	115-8809	1	Foam-Plug, RH
8	121-1681	1	Foam-Steering, Front
9	121-1680	1	Foam-Steering, Rear
10	115-8815	1	Foam-Plug, Brake
11	115-8814	1	Foam-Pawl, Brake
12	121-1675	1	Foam-Brake, Center
13	121-1674	2	Foam-Plug, Brakes
14	127-3696	1	Foam-Seat
15	127-3708	1	Foam-Right

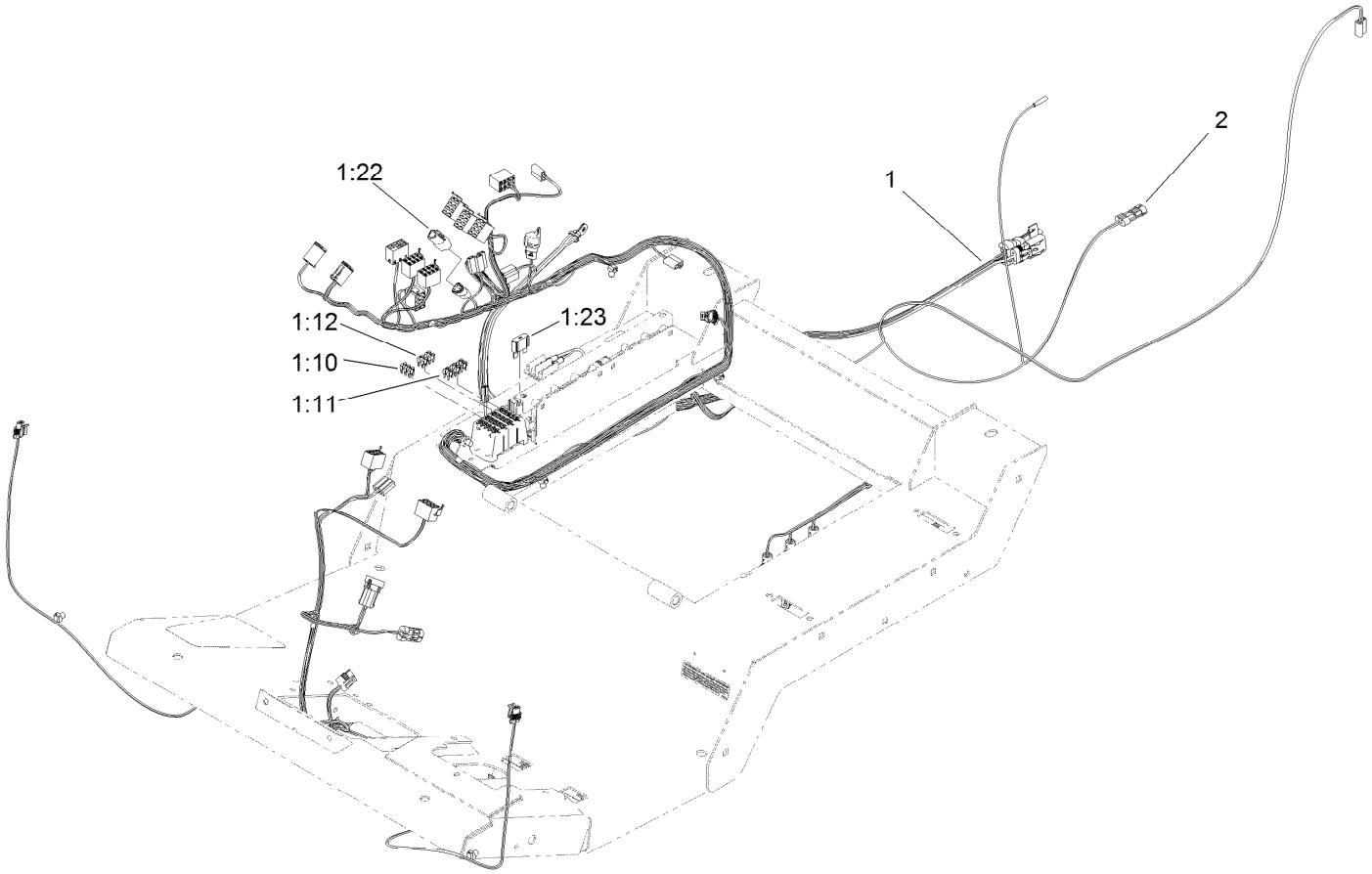

Platform Harness and Fuse Assembly

Ref.	*Part Number*	*Qty.*	*Description*
1	122-0227	1	Harness-Wire, Platform
1:10	121-8861	3	Fuse-Mini Blade, 2 Amp
1:11	121-8865	6	Fuse-Mini Blade, 7.5 Amp
1:12	121-8866	4	Fuse-Mini Blade, 10 Amp
1:22	32180-043	1	Resistor-120 Ohm
1:23	114-3342	1	Fuse-Maxi, 60 Amp
2	122-0353	1	Harness-Wire

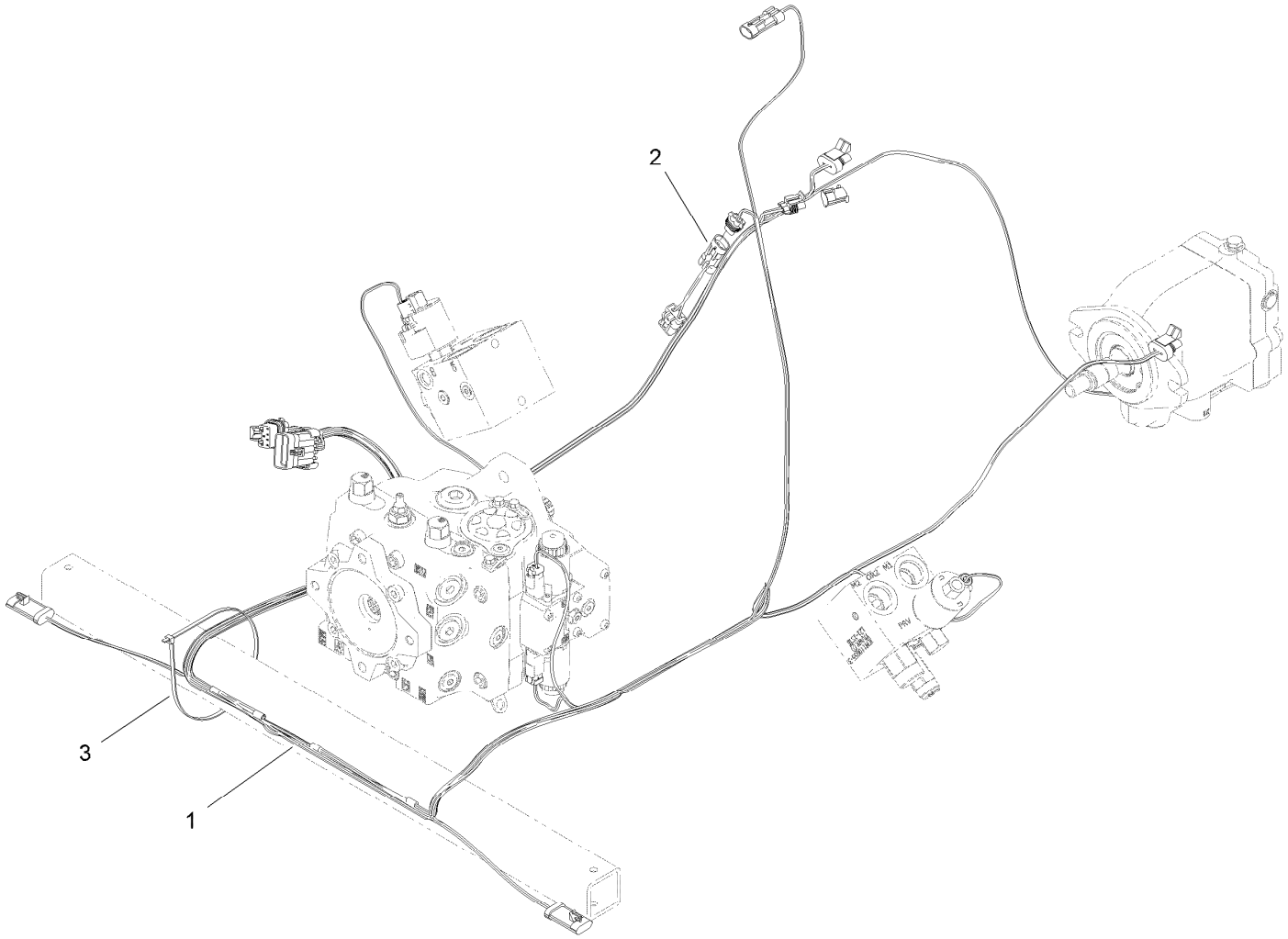

Rear Wire Harness Assembly

Ref.	Part Number	Qty.	Description
1	122-0228	1	Harness-Wire, Rear
2	115-1931	1	Harness-Wire, Fuel Pump Adapter
3	3290-379	1	Tie-Cable

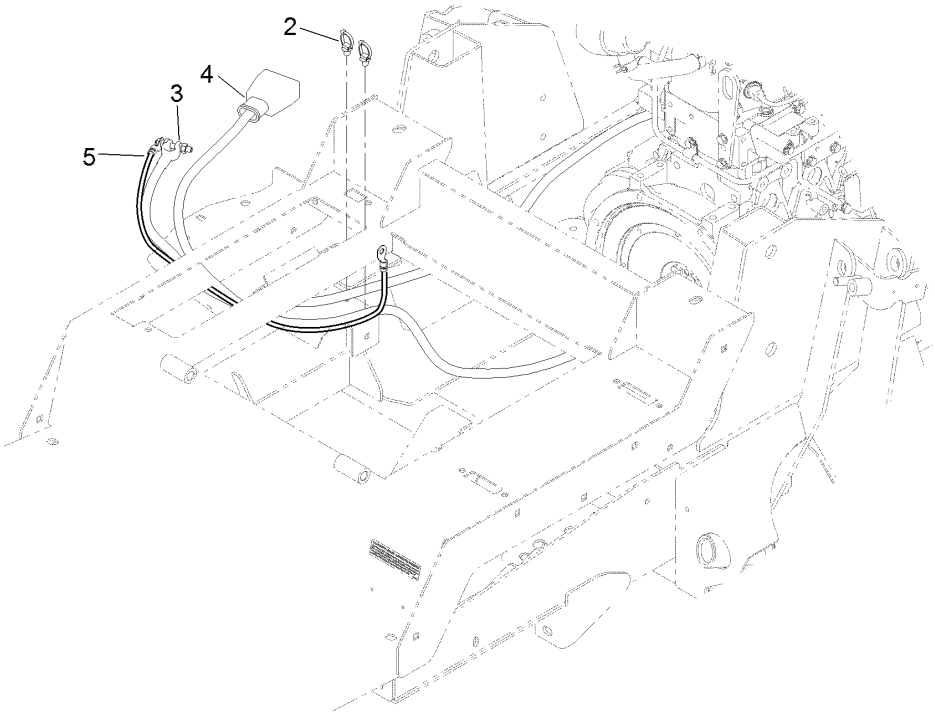

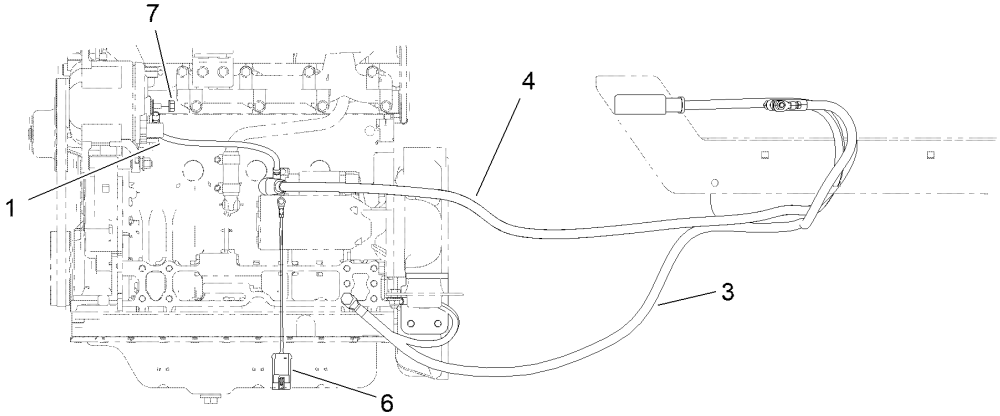

Battery Cable and Ground Assembly

Ref.	*Part Number*	*Qty.*	*Description*
1	122-0071	1	Cable-Battery, Positive
2	32180-030	2	Clip-Tie
3	121-8898	1	Cable-Battery, Negative
4	121-8897	1	Cable-Battery, Positive
5	54-3094	1	Cable
6	108-9470	1	Harness-Wire, Fusible Link
7	33004-00	2	Nut-HF

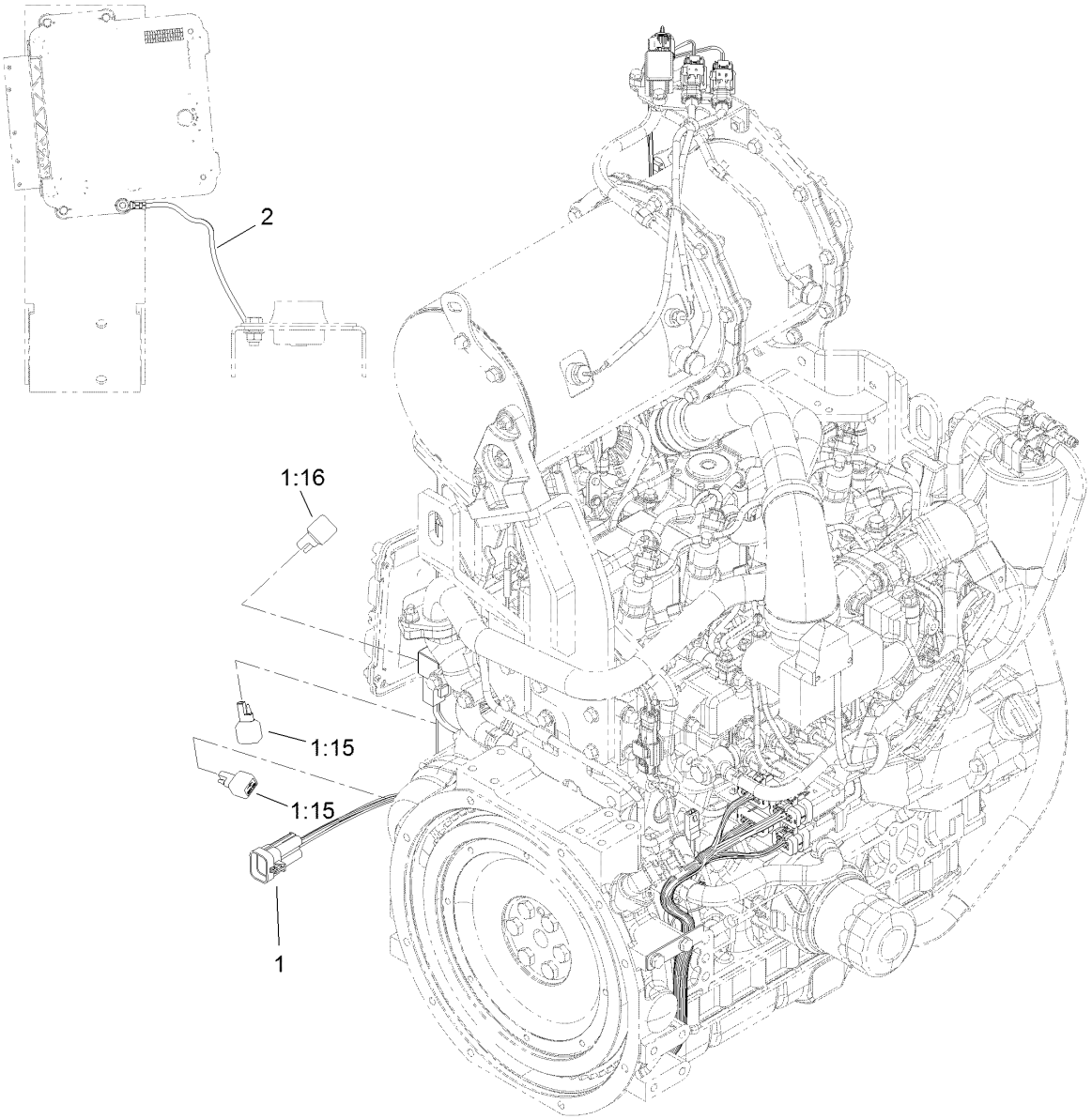

Engine Harness Assembly

Ref.	*Part Number*	*Qty.*	*Description*
1	122-0229	1	Harness-Wire, Engine
1:15	100-4918	2	Diode
1:16	121-8891	1	Resistor (1.6K Ohm)
2	122-0057	1	Harness-Wire, Ground

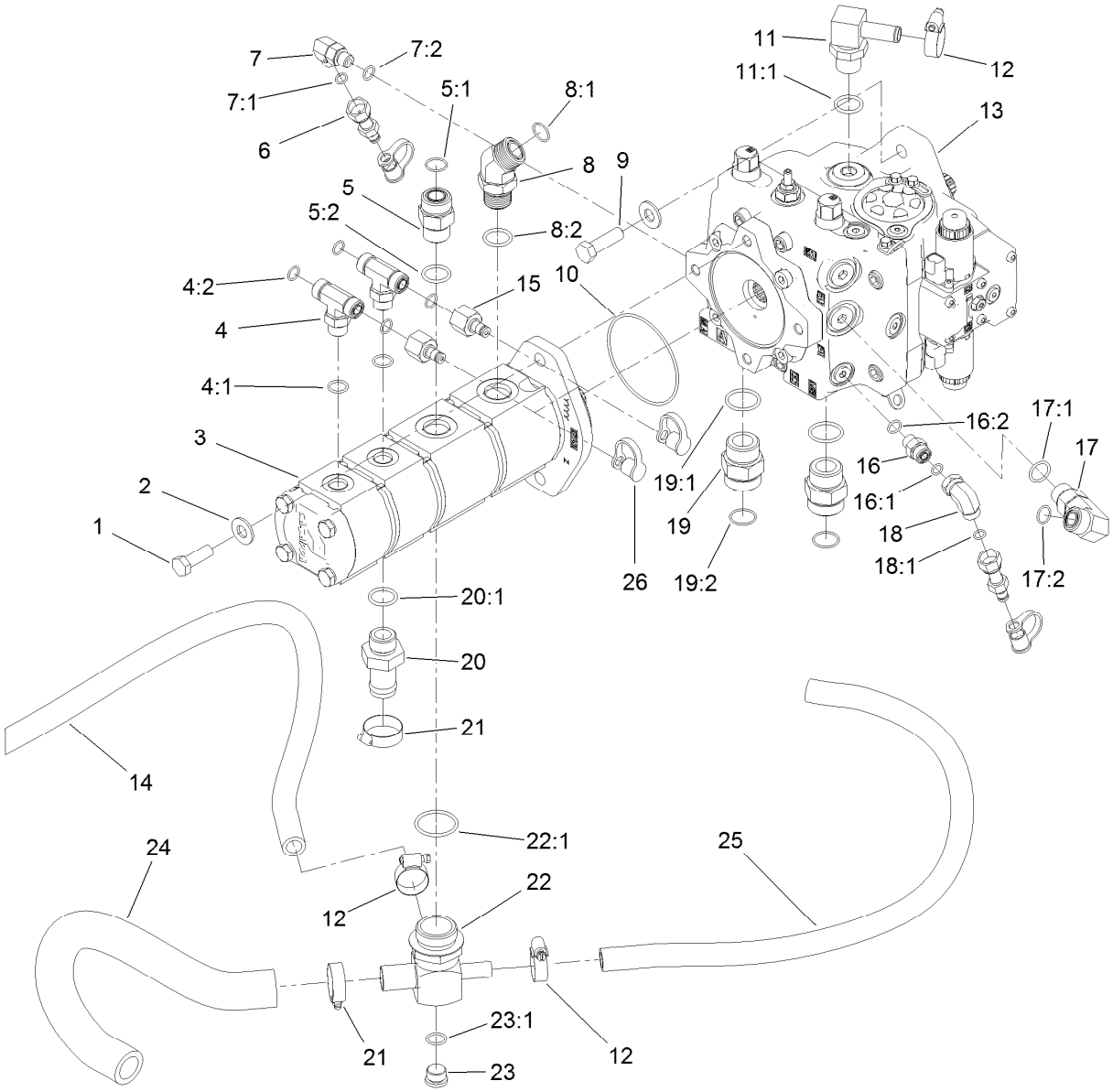

Piston Pump and Gear Pump Assembly

Ref.	Part Number	Qty.	Description
1	121-1525	2	Screw-HH
2	87-7270	4	Washer-Thrust
3	120-8904	1	4-Section Gear Pump ASM
4	340-157	2	Fitting-HYD, Tee
4:1	237-79	1	O-Ring
4:2	237-30	2	O-Ring
5	340-9	1	Fitting-STR
5:1	237-58	1	O-Ring
5:2	237-81	1	O-Ring
6	86-5480	2	Nipple-Test
7	340-77	1	Fitting-Elbow, 90 DEG
7:1	237-22	1	O-Ring
7:2	237-42	1	O-Ring
8	100-5530	1	Fitting-45 DEG
8:1	237-58	1	O-Ring
8:2	237-81	1	O-Ring
9	121-1524	2	Screw-HH
10	107-9447	1	O-Ring
11	117-3681	1	Fitting-Elb 90
11:1	237-81	1	O-Ring
12	2412-129	3	Clamp-Hose

Ref.	Part Number	Qty.	Description
13	120-9059	1	Piston Pump ASM
14	121-1647	1	Hose-HYD
15	100-5616	2	Fitting
16	340-2	1	Fitting-Straight
16:1	237-22	1	O-Ring
16:2	237-42	1	O-Ring
17	121-1492	1	Fitting-90
17:1	237-80	1	O-Ring
17:2	237-65	1	O-Ring
18	340-159	1	Elbow-90
18:1	237-22	2	O-Ring
19	104-3797	2	Fitting-Straight
19:1	237-146	1	O-Ring
19:2	340-65	1	O-Ring
20	99-3017	1	Fitting
20:1	237-81	1	O-Ring
21	2412-34	2	Clamp-Hose
22	121-1682	1	Fitting-Tee
22:1	237-101	1	O-Ring
23	353-988	1	Plug-Hex
23:1	237-79	1	O-Ring

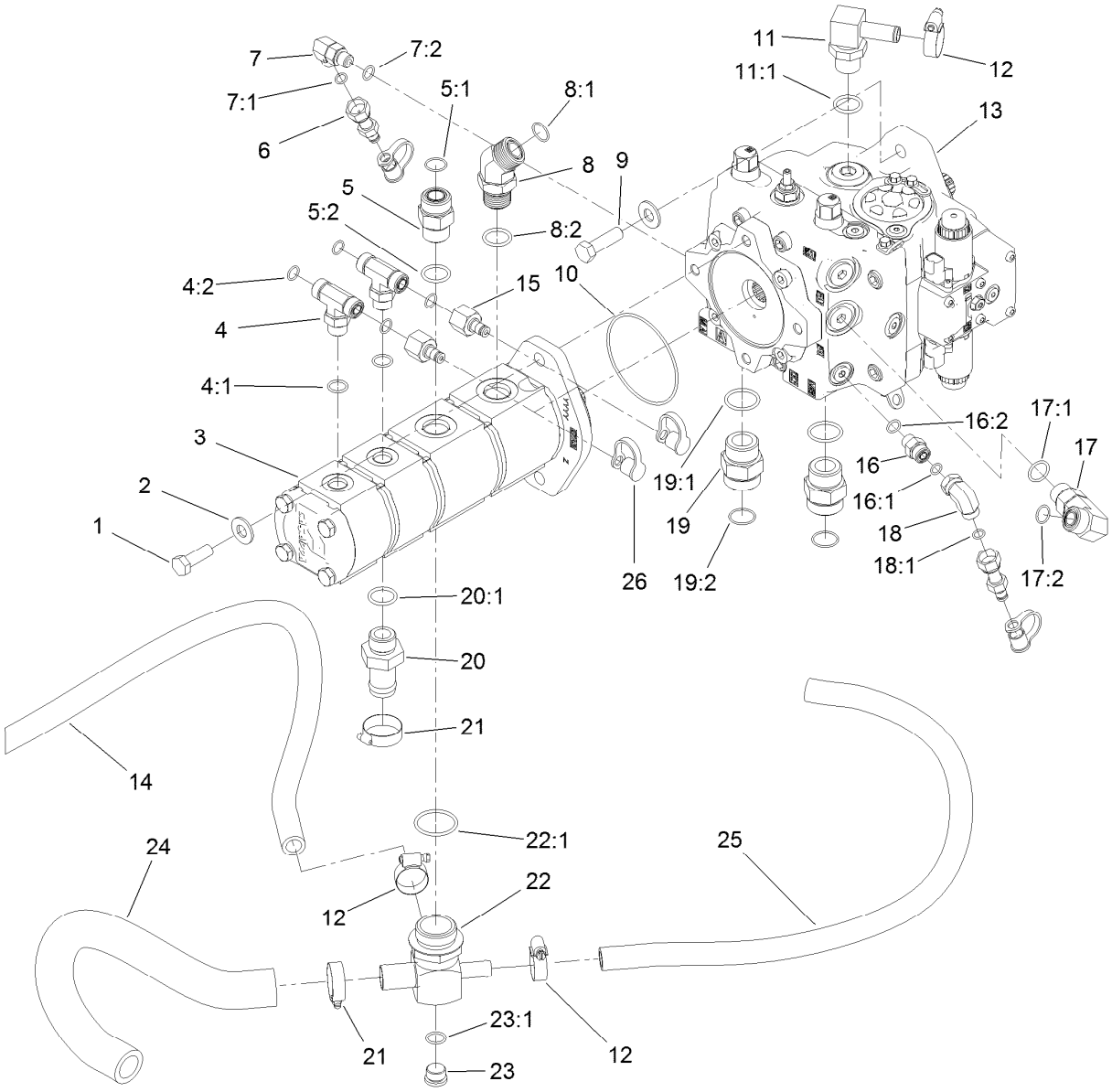

Piston Pump and Gear Pump Assembly (continued)

Ref.	Part Number	Qty.	Description
24	120-8815	1	Hose-Suction
25	120-9050	1	Hose-HYD
26	354-79	4	Cap-Dust

Piston Pump Assembly No. 120-9059

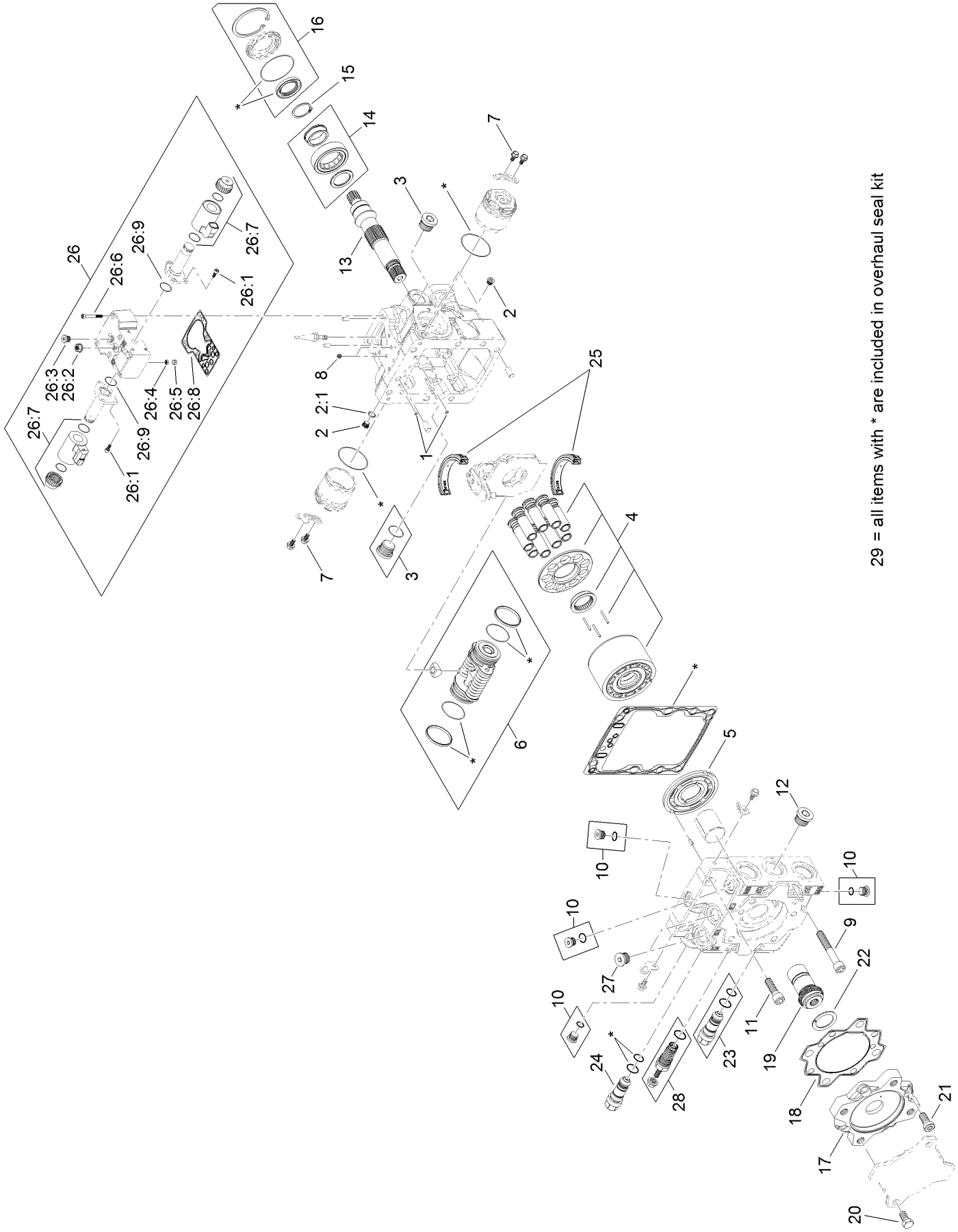

29 = all items with * are included in overhaul seal kit

Piston Pump Assembly No. 120-9059 (continued)

Ref.	Part Number	Qty.	Description
1	125-5266	2	Screen
2	75-0170	2	Plug-Thread, Straight
2:1	92-8777	1	O-Ring
3	107-4352	2	Plug
4	121-1723	1	Cylinder Block Kit
5	121-1724	1	Plate-Valve, CW
6	121-1725	1	Servo Piston ASM
7	125-5270	6	Screw
8	125-5276	2	Orifice (0.8)
9	121-1726	4	Screw
10	125-5300	4	Plug ASM
11	121-1727	2	Screw
12	125-5301	1	Plug
13	121-1728	1	Shaft
14	125-5279	1	Bearing-Roller
15	125-5280	1	Ring-Retaining
16	121-1729	1	Shaft Seal Kit
17	125-5284	1	Adapter
18	125-5285	1	Seal-Adapter
19	121-1730	1	Coupling
20	125-5281	4	Screw
21	125-5282	4	Screw
22	125-5287	1	Plate-Thrust
23	121-1731	1	Valve-Relief, High Pressure
24	125-5291	1	Valve-Relief, High Pressure
25	121-1732	1	Swash Plate Bearing Kit
26	125-5295	1	Control Kit (12 Volt)
26:1	125-5272	6	Screw
26:2	125-5273	1	Nut-Seal
26:3	125-5302	1	Plug
26:4	125-5266	1	Screen
26:5	125-5269	1	Ring-Locking
26:6	125-5274	6	Screw
26:7	125-5294	2	Coil Kit
26:8	125-5283	1	Gasket-Control
26:9	125-5288	2	O-Ring
27	125-5303	2	Plug ASM
28	125-5297	1	Charge Relief Kit
29	121-1733	1	Overhaul Seal Kit

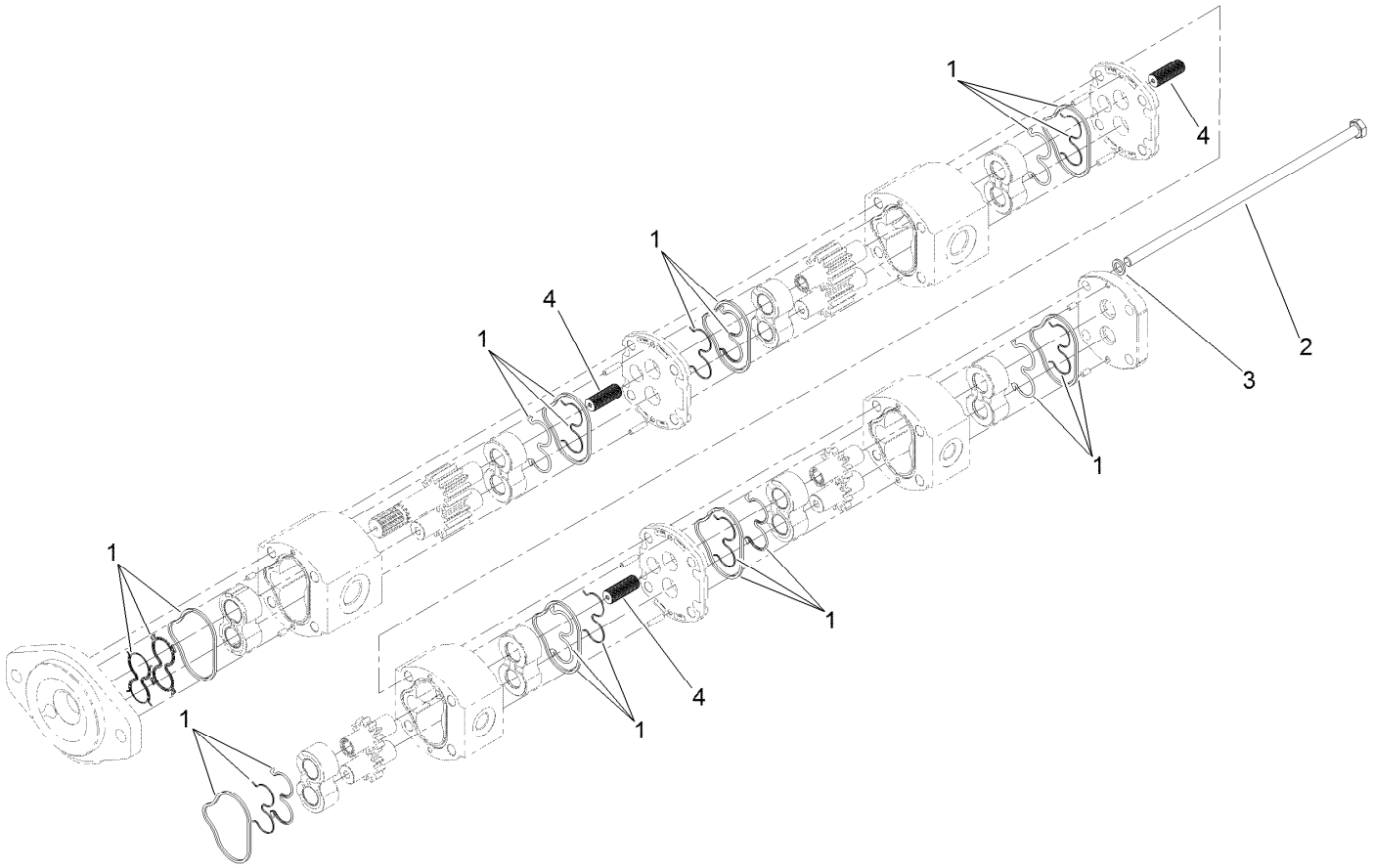

4-Section Gear Pump Assembly No. 120-8904

Ref.	*Part Number*	*Qty.*	*Description*
1	115-3776	1	Seal Kit
2	121-1721	4	Bolt
3	121-1722	4	Washer
4	120-6284	3	Hub-Connecting

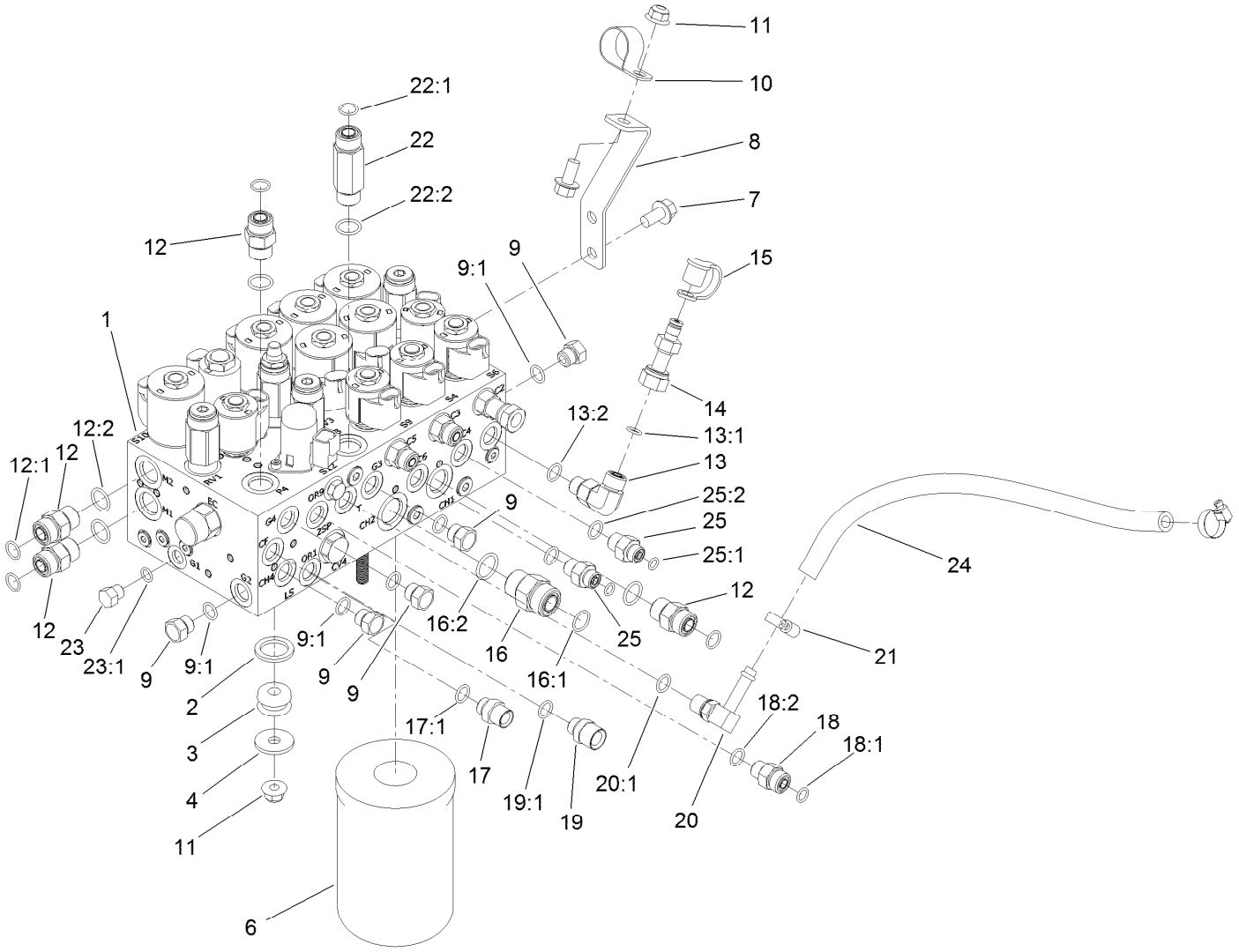

Combination Manifold Assembly

Ref.	Part Number	Qty.	Description
1	127-3650	1	HYD Combination Manifold ASM
2	92-2650	3	Spacer-Clutch
3	63-9750	3	Mount
4	63-8410	3	Washer
6	75-1310	1	Filter-HYD
7	3234-1	3	Screw-HHF
8	121-1542	1	Plate-Mount, Hose
9	353-508	5	Plug-HH
9:1	237-42	1	O-Ring
10	2412-126	1	R-Clamp
11	104-8301	4	Nut-HF, NI
12	340-4	4	Fitting-Straight
12:1	237-30	1	O-Ring
12:2	237-79	1	O-Ring
13	340-77	1	Fitting-Elbow, 90 DEG
13:1	237-22	1	O-Ring
13:2	237-42	1	O-Ring
14	86-5480	1	Nipple-Test
15	354-79	1	Cap-Dust
16	340-7	1	Fitting-Straight

Ref.	Part Number	Qty.	Description
16:1	237-65	1	O-Ring
16:2	237-80	1	O-Ring
17	120-8975	1	Fitting-Straight
17:1	237-42	1	O-Ring
18	340-2	1	Fitting-Straight
18:1	237-22	1	O-Ring
18:2	237-42	1	O-Ring
19	120-8979	1	Fitting-Straight
19:1	237-42	1	O-Ring
20	100-4887	1	Fitting-Elbow, 90
20:1	237-42	1	O-Ring
21	2412-36	2	Clamp-Hose
22	119-4854	1	Fitting-STR
22:1	237-30	1	O-Ring
22:2	237-79	1	O-Ring
23	353-512	1	Plug
23:1	237-78	1	O-Ring
24	87-5730	1	Hose
25	340-1	2	Fitting-Straight
25:1	237-21	1	O-Ring
25:2	237-42	1	O-Ring

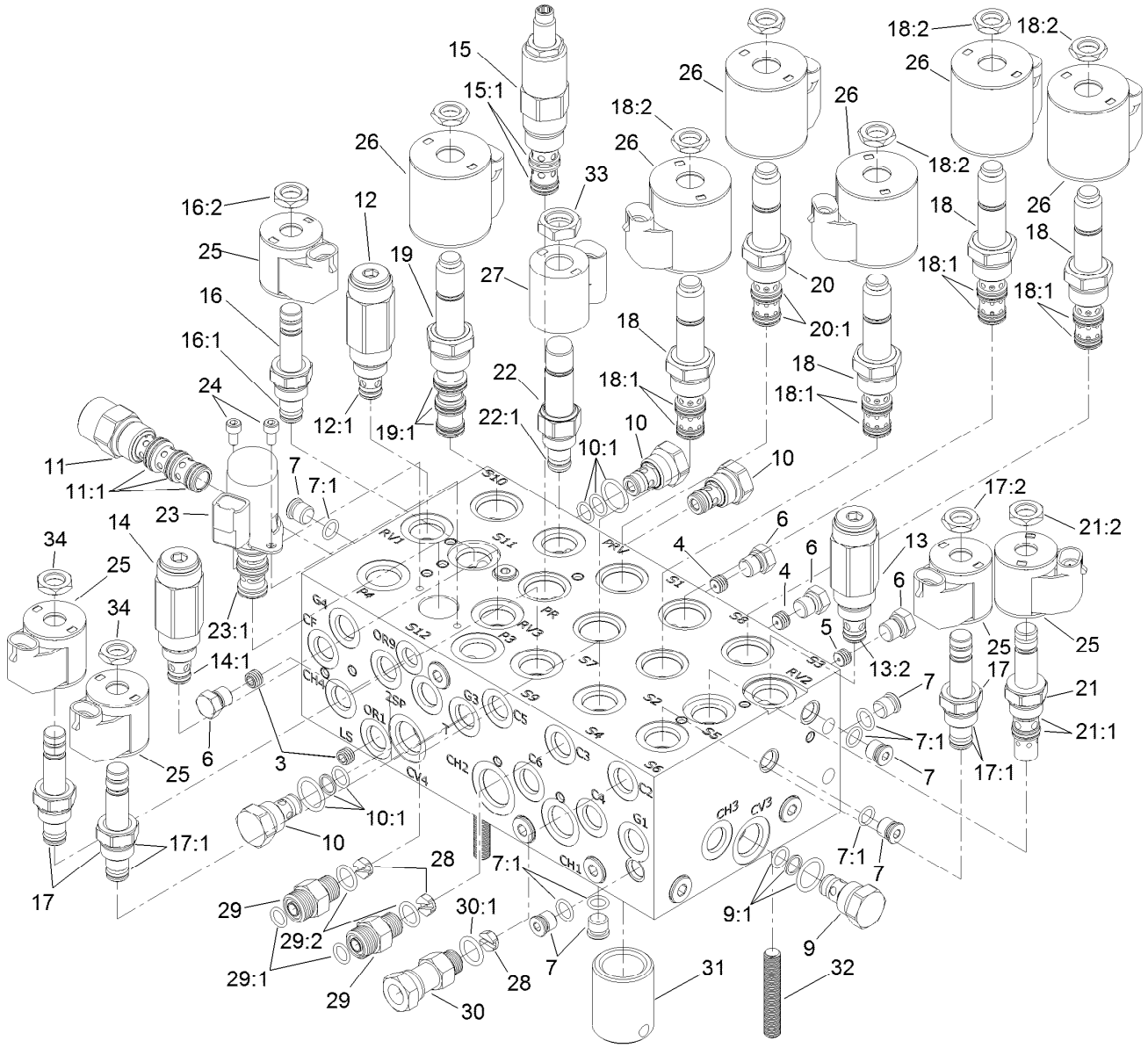

Combination Manifold Assembly No. 127-3650

Ref.	Part Number	Qty.	Description
3	110-5973	2	Orifice-0.030
4	112-6538	2	Orifice (.063 Inch)
5	110-8883	1	Plug-Orifice (0.040)
6	117-0115	4	Plug
7	353-990	14	Plug ASM
7:1	237-78	1	O-Ring
9	114-2873	1	Check Valve ASM
9:1	105-9156	1	Seal Kit
10	105-9321	3	Check Valve ASM
10:1	105-9156	1	Seal Kit
11	115-5409	1	Compensator ASM
11:1	110-8908	1	Spool Valve Seal Kit
12	125-7560	1	Relief Valve ASM
12:1	105-9156	1	Seal Kit
13	105-9844	1	Valve-Relief
13:2	105-9156	1	Seal Kit
14	125-7558	1	Relief Valve ASM
14:1	105-9156	1	Seal Kit
15	127-3663	1	Valve-Pressure Reducing
15:1	105-9154	1	Seal Kit
16	107-7516	1	Solenoid Valve ASM

Ref.	Part Number	Qty.	Description
16:1	105-9156	1	Seal Kit
16:2	110-2634	1	Nut-Coil
17	112-9206	3	Solenoid Valve ASM
17:1	105-9156	1	Seal Kit
17:2	110-2634	1	Nut-Coil
18	115-5400	4	Solenoid Valve ASM
18:1	107-7813	1	Seal Kit
18:2	110-2634	1	Nut-Coil
19	115-3023	1	Solenoid Valve ASM
19:1	110-8908	1	Spool Valve Seal Kit
20	125-7556	1	Solenoid Valve ASM
20:1	107-7813	1	Seal Kit
21	115-5405	1	Solenoid Valve ASM
21:1	115-5413	1	Seal Kit
21:2	110-2634	1	Nut-Coil
22	125-7555	1	Proportional Relief Valve ASM
22:1	110-6316	1	Seal Kit
23	125-7554	1	Valve-Solenoid
23:1	125-7561	1	Seal Kit
24	115-8733	2	Screw-HSH

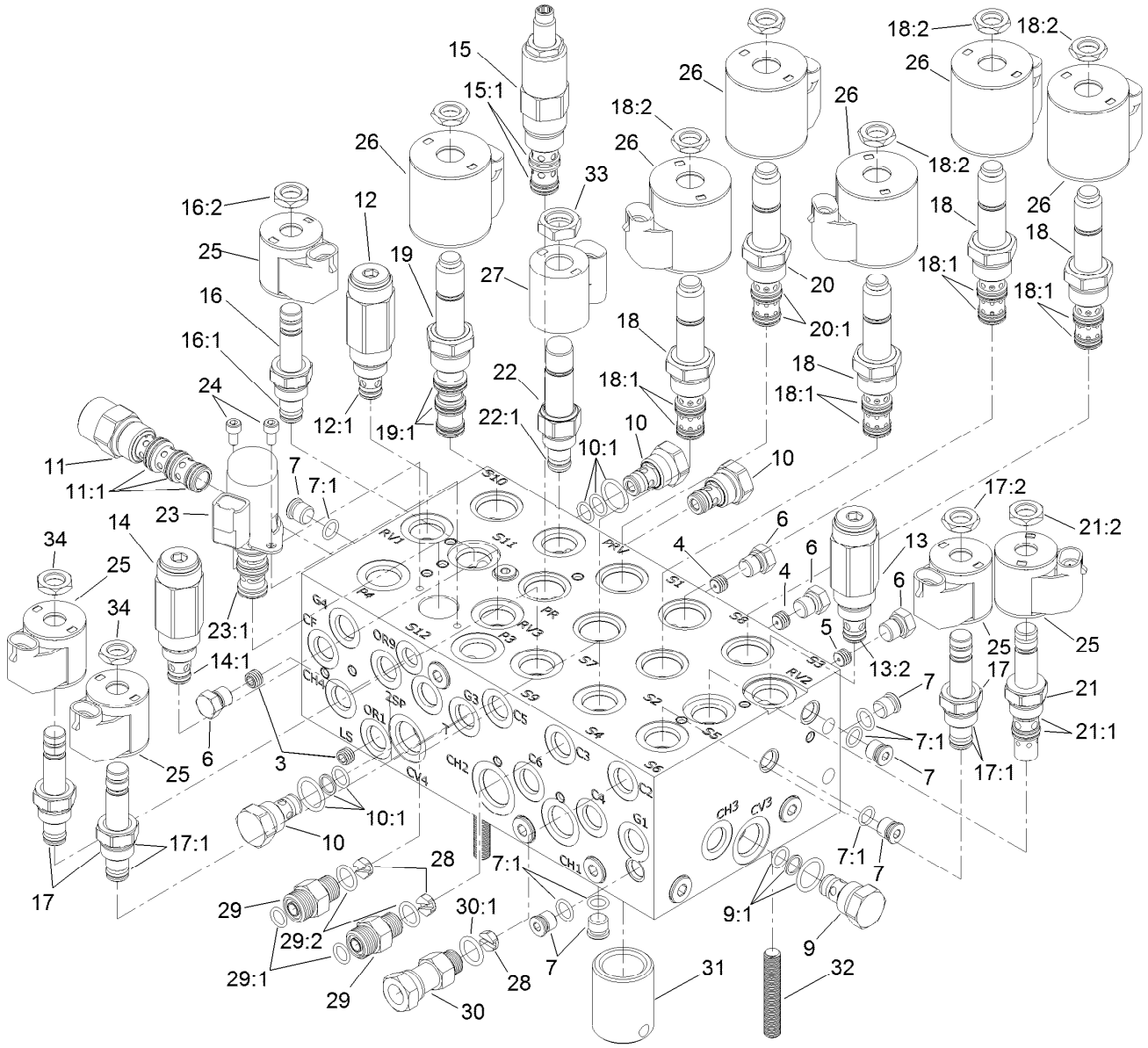

Combination Manifold Assembly No. 127-3650 (continued)

Ref.	Part Number	Qty.	Description
25	110-0497	5	Coil-Solenoid
26	110-6344	6	Coil-12V, DC
27	125-7553	1	E-Coil, 12Vdc
28	125-7552	3	Orifice-Check, .070 DIA
29	340-2	2	Fitting-Straight
29:1	237-22	1	O-Ring
29:2	237-42	1	O-Ring

Ref.	Part Number	Qty.	Description
30	104-3779	1	Connector-Swivel, Straight
30:1	237-42	1	O-Ring
31	125-7551	1	Nipple-Filter
32	130-2661	3	Stud-Manifold
33	125-7550	1	Nut-Coil
34	110-2634	11	Nut-Coil

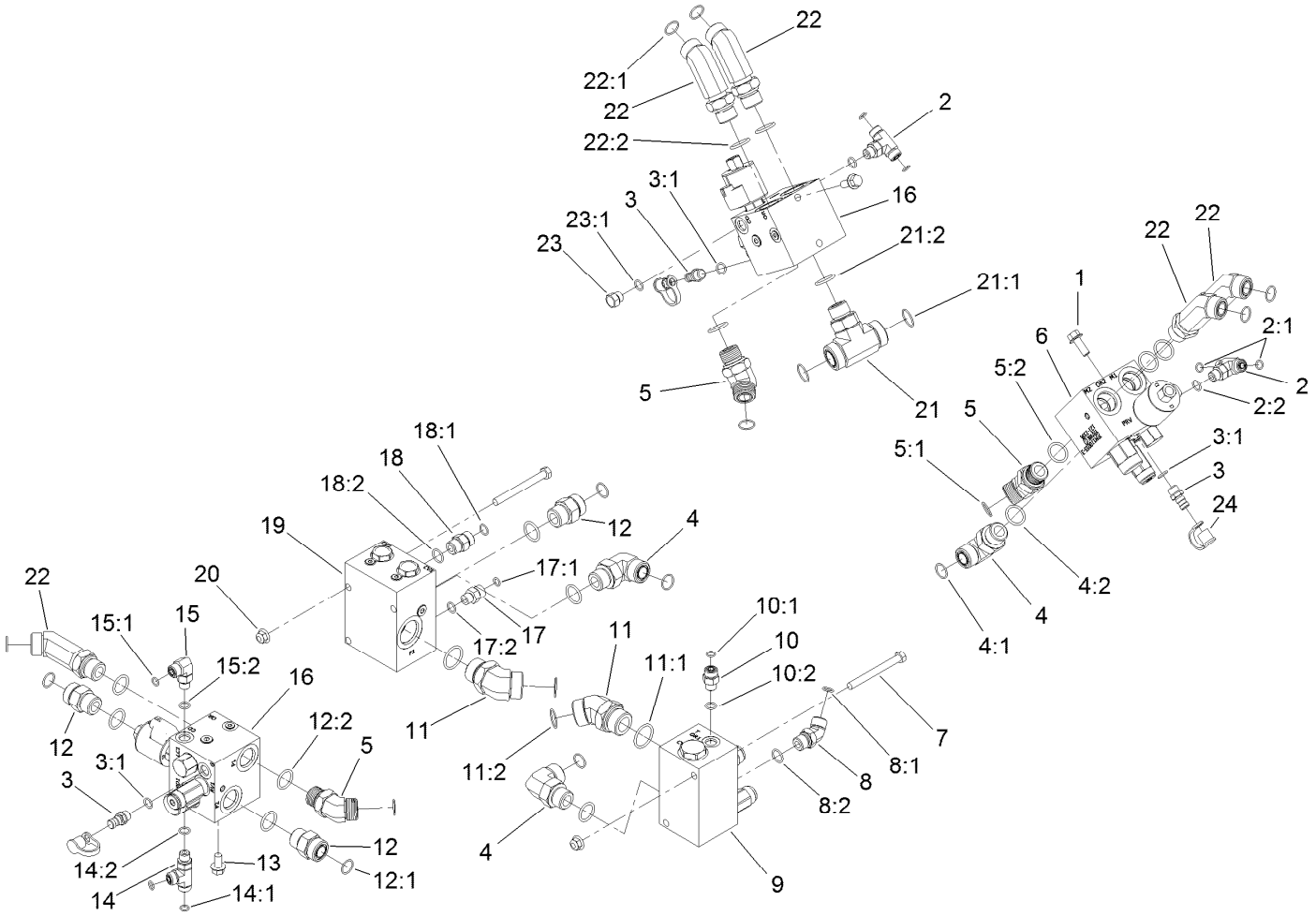

Manifold Block Assembly

Ref.	Part Number	Qty.	Description
1	3234-11	4	Screw-HHF
2	340-94	2	Adapter
2:1	237-22	2	O-Ring
2:2	237-42	1	O-Ring
3	59-7410	3	Fitting-Diagnostic
3:1	237-42	1	O-Ring
4	340-142	3	Fitting-Elbow, 90 DEG
4:1	237-58	1	O-Ring
4:2	237-81	1	O-Ring
5	100-5530	3	Fitting-45 DEG
5:1	237-58	1	O-Ring
5:2	237-81	1	O-Ring
6	121-1536	1	Manifold-PTO, Left
7	323-42	4	Screw-HH
8	340-101	1	Fitting-HYD, 45 DEG
8:1	237-30	1	O-Ring
8:2	237-79	1	O-Ring
9	121-1530	1	Manifold-Traction, Rear
10	340-2	1	Fitting-Straight
10:1	237-22	1	O-Ring
10:2	237-42	1	O-Ring

Ref.	Part Number	Qty.	Description
11	104-3509	2	Fitting-HYD, 45 DEG
11:1	237-146	1	O-Ring
11:2	340-65	1	O-Ring
12	340-9	3	Fitting-STR
12:1	237-58	1	O-Ring
12:2	237-81	1	O-Ring
13	3234-1	2	Screw-HHF
14	340-86	1	Fitting-Tee
14:1	237-22	2	O-Ring
14:2	237-42	1	O-Ring
15	340-77	1	Fitting-Elbow, 90 DEG
15:1	237-22	1	O-Ring
15:2	237-42	1	O-Ring
16	121-1537	2	Manifold-PTO, Center And Right
17	92-9258	1	Adapter-Check
17:1	237-22	1	O-Ring
17:2	237-42	1	O-Ring
18	100-4890	1	Fitting-Check
18:1	237-79	1	O-Ring
18:2	237-30	1	O-Ring

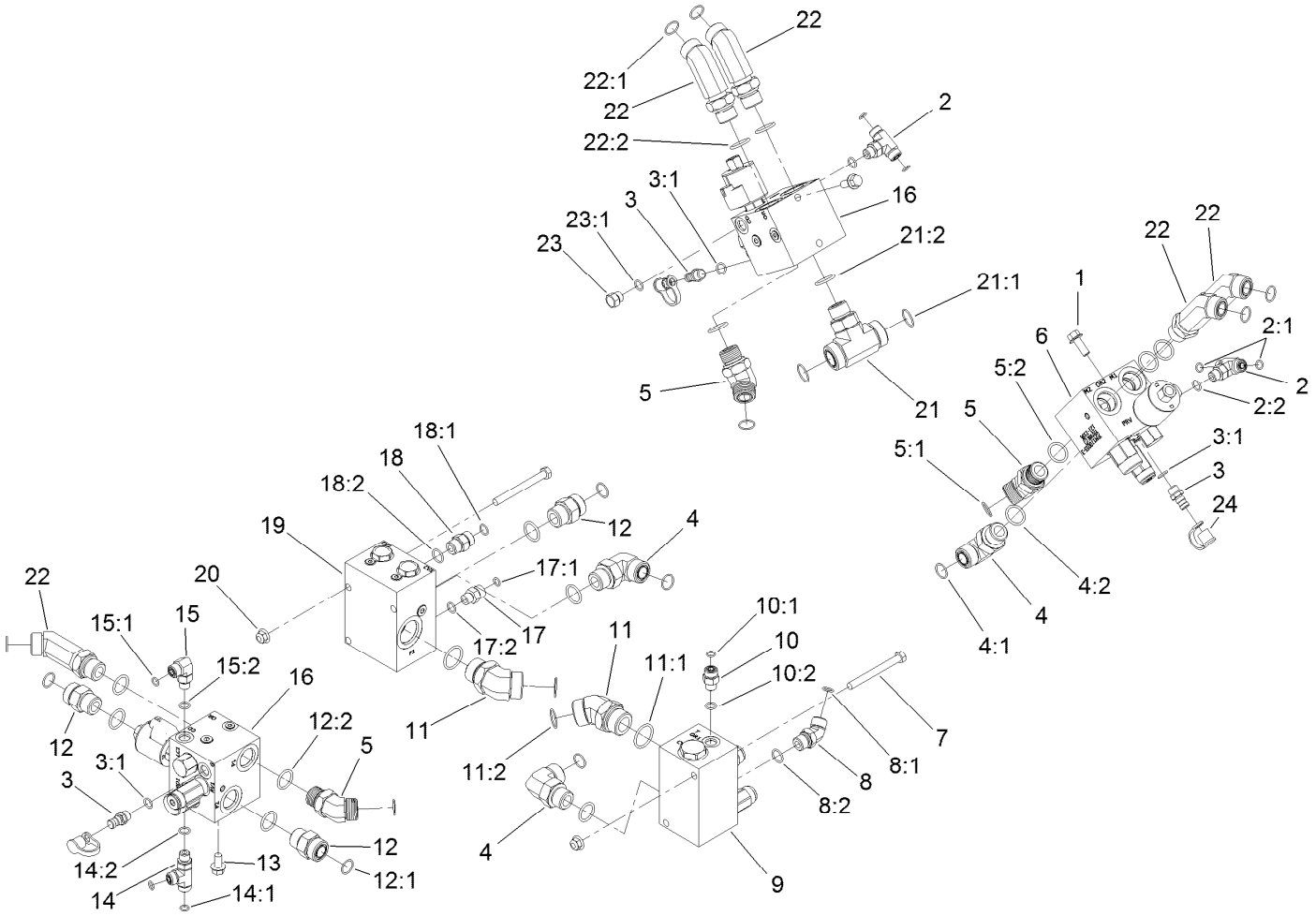

Manifold Block Assembly (continued)

Ref.	Part Number	Qty.	Description
19	121-1550	1	Flow Divider Manifold ASM
20	104-8301	4	Nut-HF, NI
21	120-8825	1	Fitting-Tee
21:1	340-65	2	O-Ring
21:2	237-81	1	O-Ring
22	120-8982	5	Fitting-45 DEG

Ref.	Part Number	Qty.	Description
22:1	237-58	1	O-Ring
22:2	237-81	1	O-Ring
23	353-508	1	Plug-HH
23:1	237-42	1	O-Ring
24	354-79	3	Cap-Dust

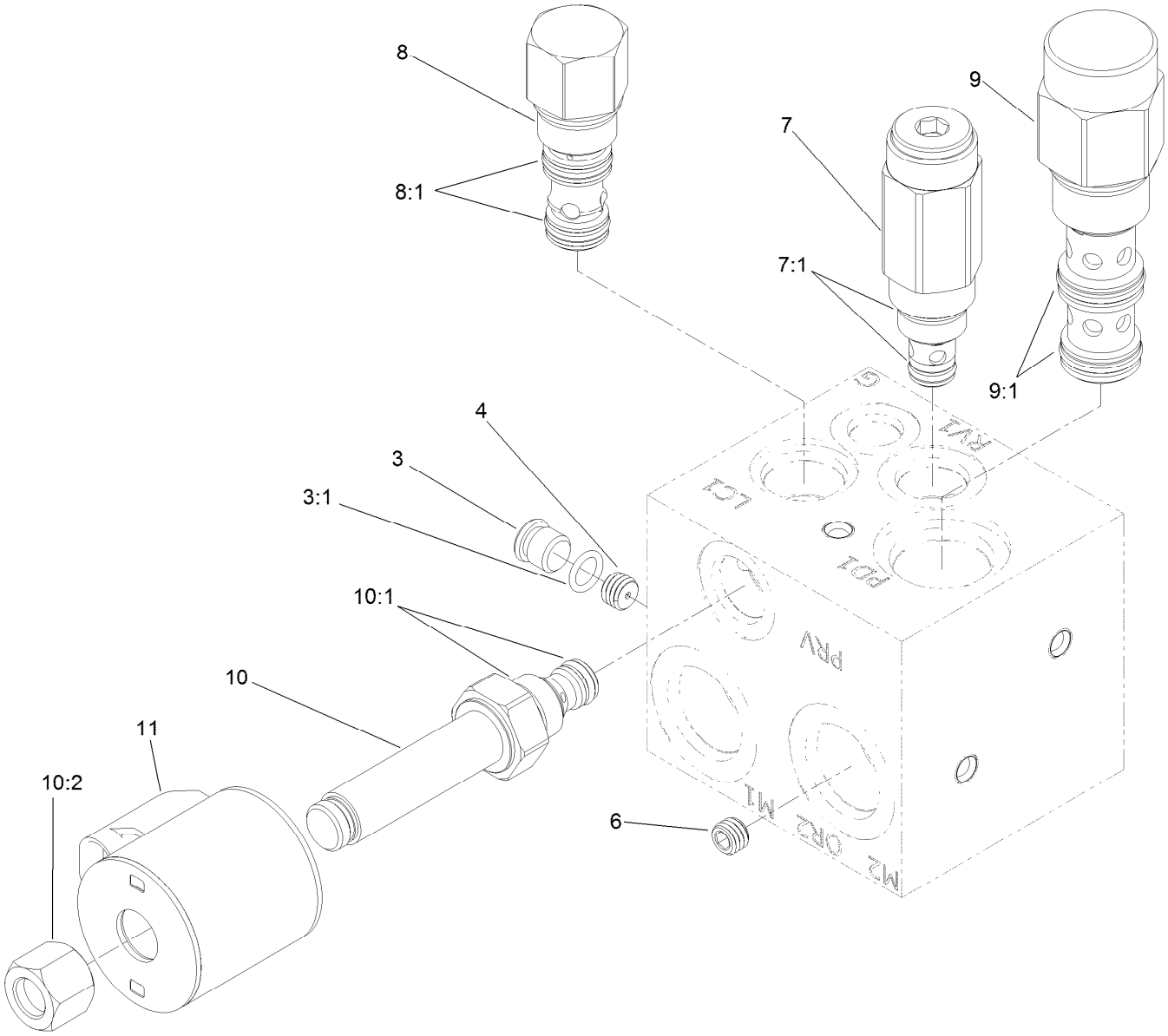

Left Power-Take-Off Manifold Assembly No. 121-1536

Ref.	*Part Number*	*Qty.*	*Description*
3	353-990	1	Plug ASM
3:1	237-78	1	O-Ring
4	117-8315	1	Orifice (.025 Inch)
6	112-6538	1	Orifice (.063 Inch)
7	114-5512	1	Valve-Relief, 600 PSI
7:1	105-9156	1	Seal Kit
8	105-9153	1	Element-Logic, Vented
8:1	119-2159	1	Seal Kit
9	125-4327	1	Valve-Directional, Pilot
9:1	114-5515	1	Seal Kit
10	117-0227	1	Valve-Relief, Proportional
10:1	105-9156	1	Seal Kit
10:2	119-2160	1	Nut-Coil
11	110-6344	1	Coil-12V, DC

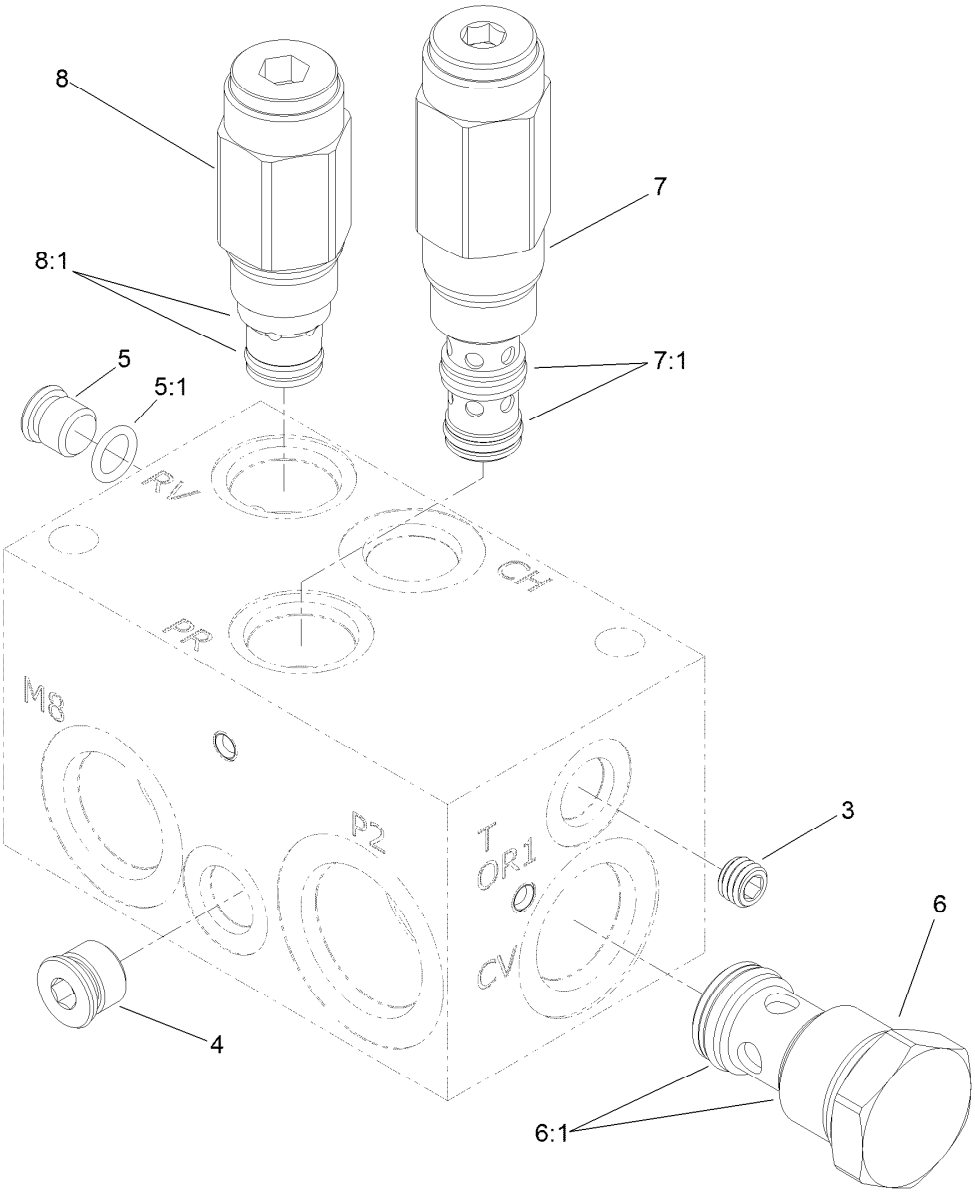

Rear Traction Manifold Assembly No. 121-1530

Ref.	Part Number	Qty.	Description
3	107-7525	1	Plug-Orifice (.050 Inch)
4		1	Plug ●
5	353-990	1	Plug ASM
5:1	237-78	1	O-Ring
6	125-4328	1	Valve-Check
6:1	125-4336	1	Seal Kit
7	125-4329	1	Valve-Reducing
7:1	125-4334	1	Seal Kit
8	125-4331	1	Valve-Relief
8:1	110-6316	1	Seal Kit

● Not serviced separately

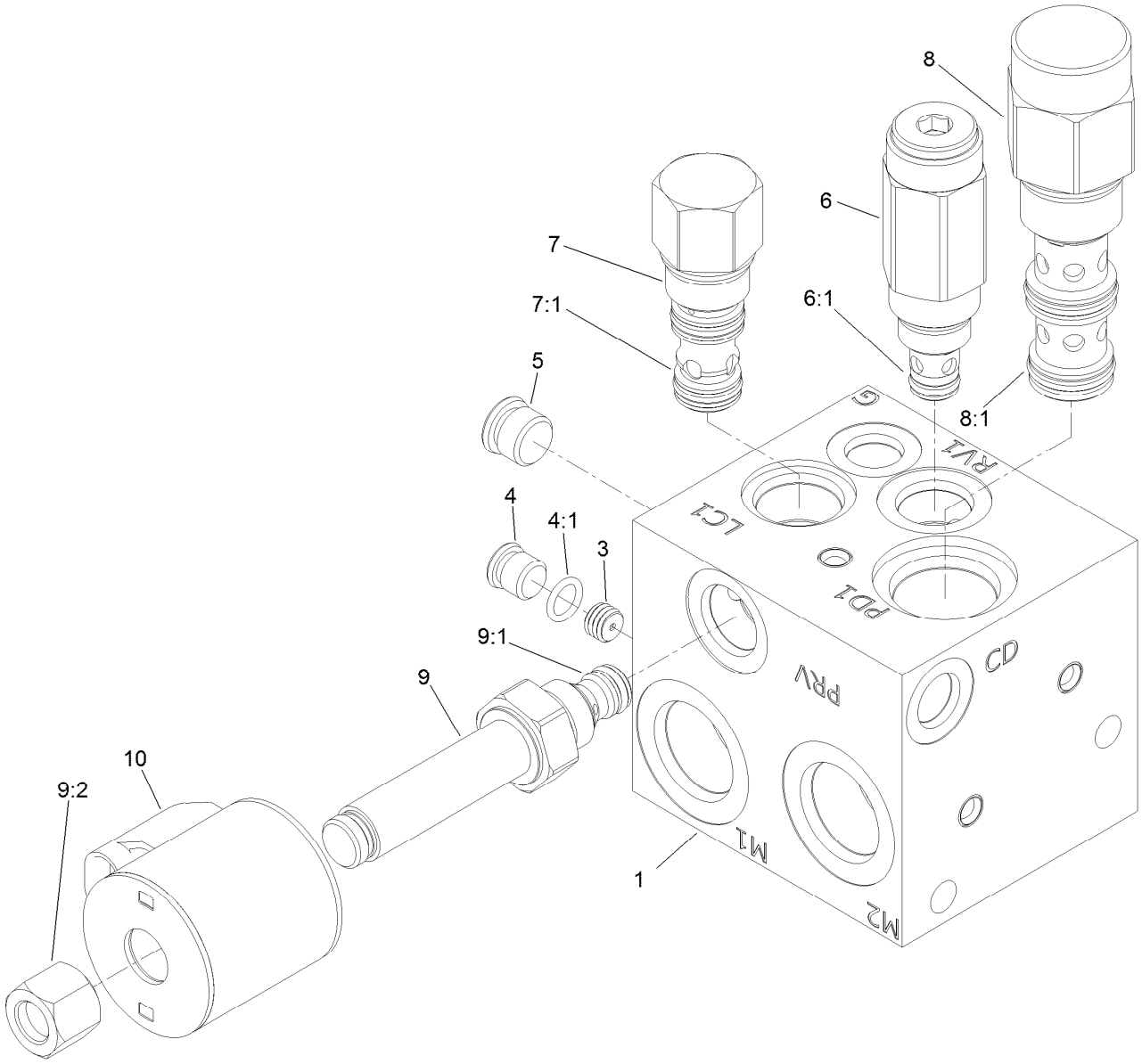

Center and Right Power-Take-Off Manifold Assembly No. 121-1537

Ref.	*Part Number*	*Qty.*	*Description*
1		1	Manifold Block ●
3	117-8315	1	Orifice (.025 Inch)
4	353-990	1	Plug ASM
4:1	237-78	1	O-Ring
5		1	Plug ●
6	114-5512	1	Valve-Relief, 600 PSI
6:1	105-9156	1	Seal Kit
7	105-9153	1	Element-Logic, Vented
7:1	119-2159	1	Seal Kit
8	125-4327	1	Valve-Directional, Pilot
8:1	114-5515	1	Seal Kit
9	117-0227	1	Valve-Relief, Proportional
9:1	105-9156	1	Seal Kit
9:2	119-2160	1	Nut-Coil
10	110-6344	1	Coil-12V, DC

● Not serviced separately

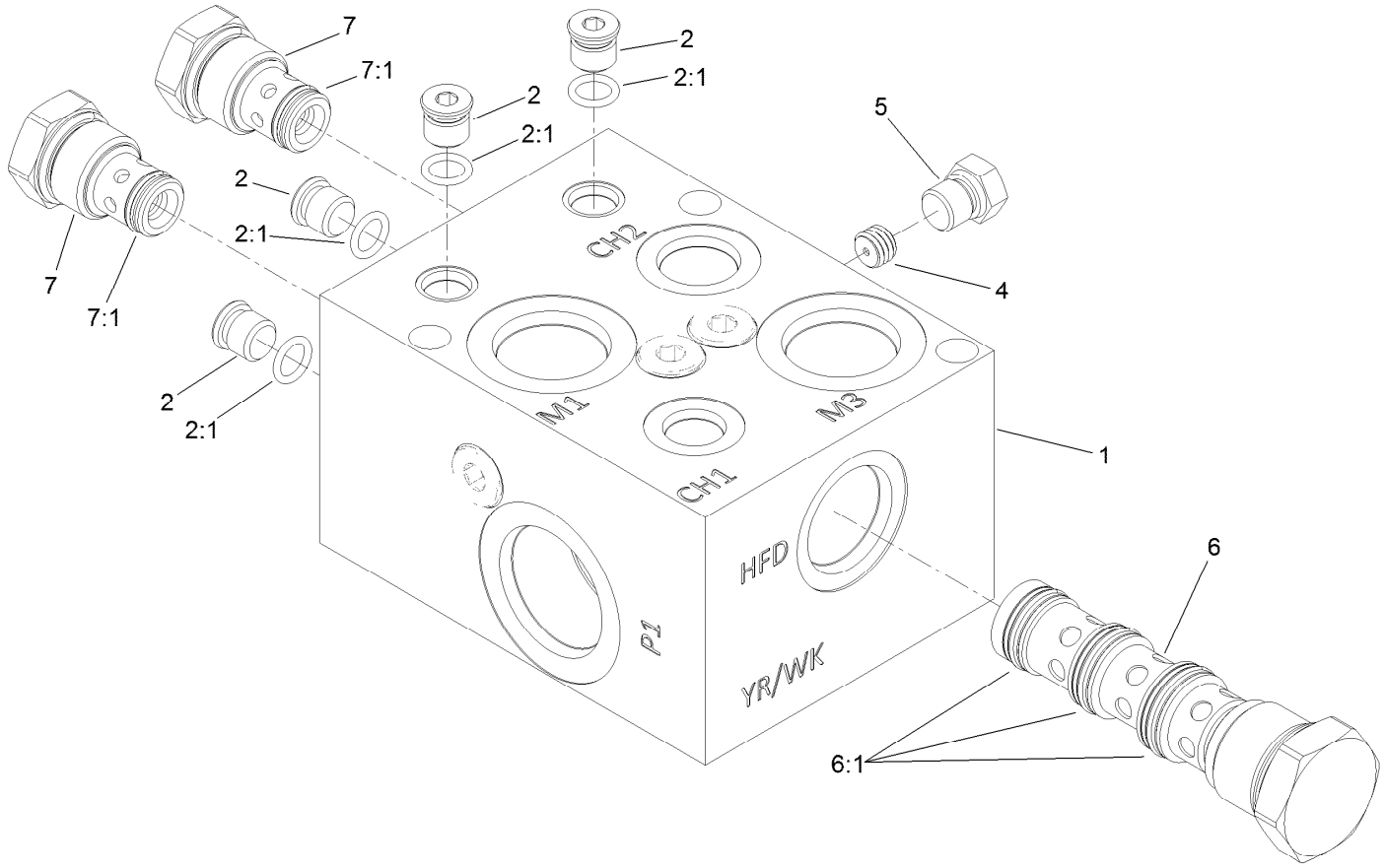

Flow Divider Manifold Assembly No. 121-1550

Ref.	*Part Number*	*Qty.*	*Description*
1		1	Manifold Block ●
2	353-990	4	Plug ASM
2:1	237-78	1	O-Ring
4	112-6538	1	Orifice (.063 Inch)
5	117-0115	1	Plug
6	125-4332	1	Valve-Flow Divider
6:1	125-4338	1	Seal Kit
7	125-4333	2	Valve-Check
7:1	125-4337	1	Seal Kit

● Not serviced separately

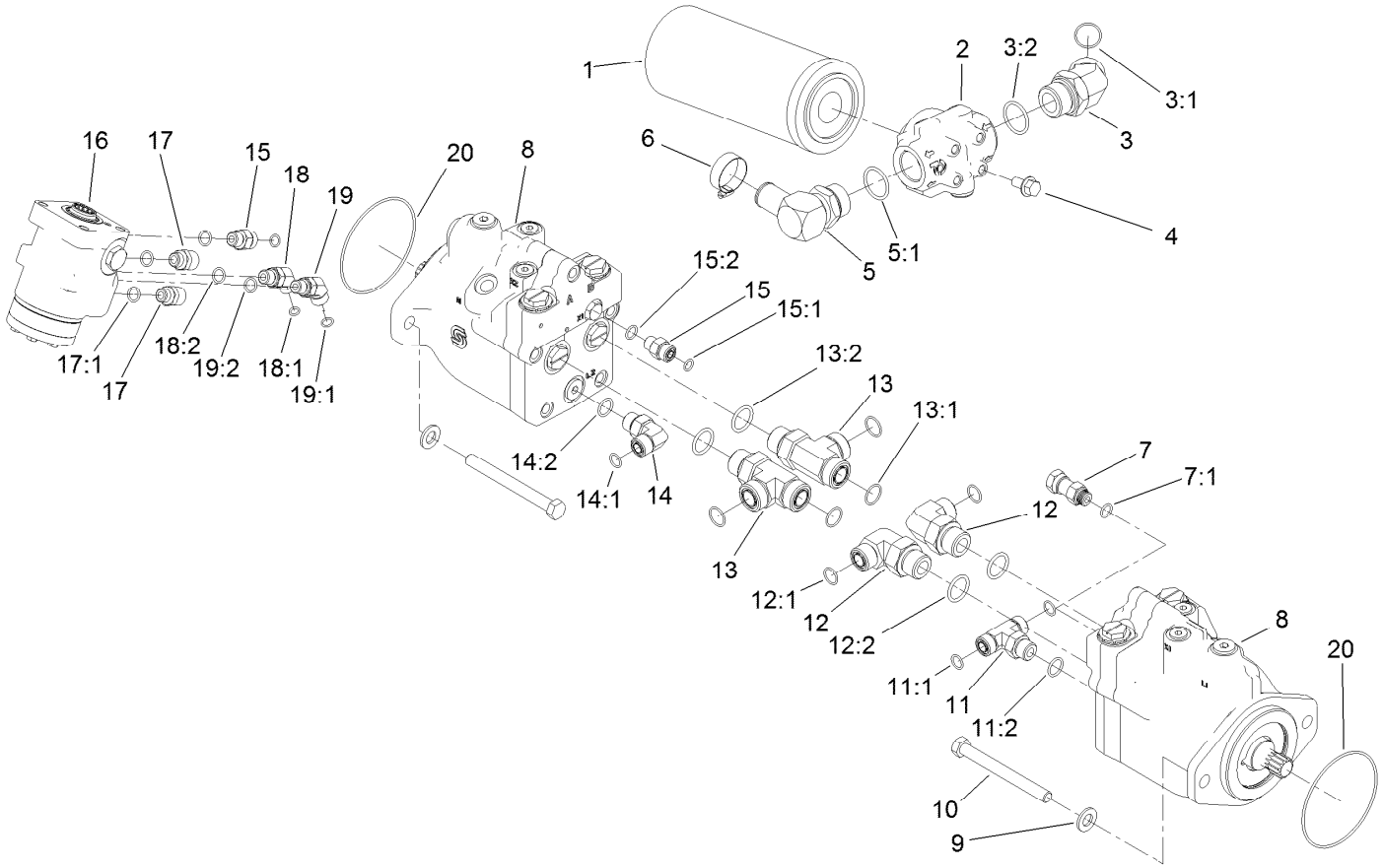

Drive Motor, Steer Valve and Filter Head Assembly

Ref.	Part Number	Qty.	Description
1	94-2621	1	Element-Filter
2	121-1577	1	Head-Filter
3	104-3509	1	Fitting-HYD, 45 DEG
3:1	237-146	1	O-Ring
3:2	340-65	1	O-Ring
4	3234-1	4	Screw-HHF
5	23-8910	1	Stem-Barb-90
5:1	237-146	1	O-Ring
6	2412-34	1	Clamp-Hose
7	104-3779	1	Connector-Swivel, Straight
7:1	237-42	1	O-Ring
8	120-8812	2	HYD Motor ASM
9	106-9888	4	Washer-Flat
10	33116-120	4	Screw-HH
11	340-157	1	Fitting-HYD, Tee
11:1	237-79	1	O-Ring
11:2	237-30	2	O-Ring
12	340-139	2	Fitting-Elbow 90
12:1	237-81	1	O-Ring
12:2	237-65	1	O-Ring

Ref.	Part Number	Qty.	Description
13	340-148	2	Fitting-Tee
13:1	237-81	1	O-Ring
13:2	237-58	2	O-Ring
14	340-98	1	Fitting-Elbow, 90 DEG
14:1	237-79	1	O-Ring
14:2	237-30	1	O-Ring
15	340-2	2	Fitting-Straight
15:1	237-22	1	O-Ring
15:2	237-42	1	O-Ring
16	130-7949	1	Steering Control Valve ASM
17	120-8979	2	Fitting-Straight
17:1	237-42	1	O-Ring
18	340-137	1	Fitting
18:1	237-21	1	O-Ring
18:2	237-42	1	O-Ring
19	340-87	1	Fitting-Elbow, 45 DEG
19:1	237-22	1	O-Ring
19:2	237-42	1	O-Ring
20	237-166	2	O-Ring

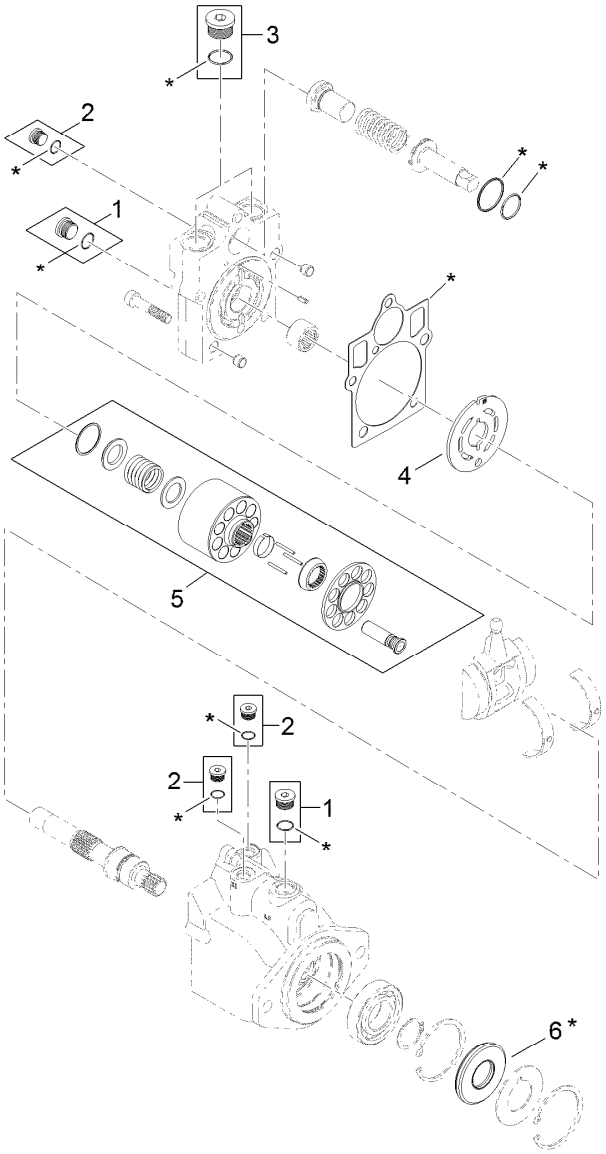

7 = all items with * are included in overhaul seal kit

Hydraulic Motor Assembly No. 120-8812

Ref.	*Part Number*	*Qty.*	*Description*
1	67-9090	2	Plug
2	75-0070	3	Plug
3	107-4352	1	Plug
4	121-1734	1	Plate-Valve
5	121-1735	1	Cylinder Block Kit
6	69-3190	1	Seal-Lip
7	121-1736	1	Overhaul Seal Kit

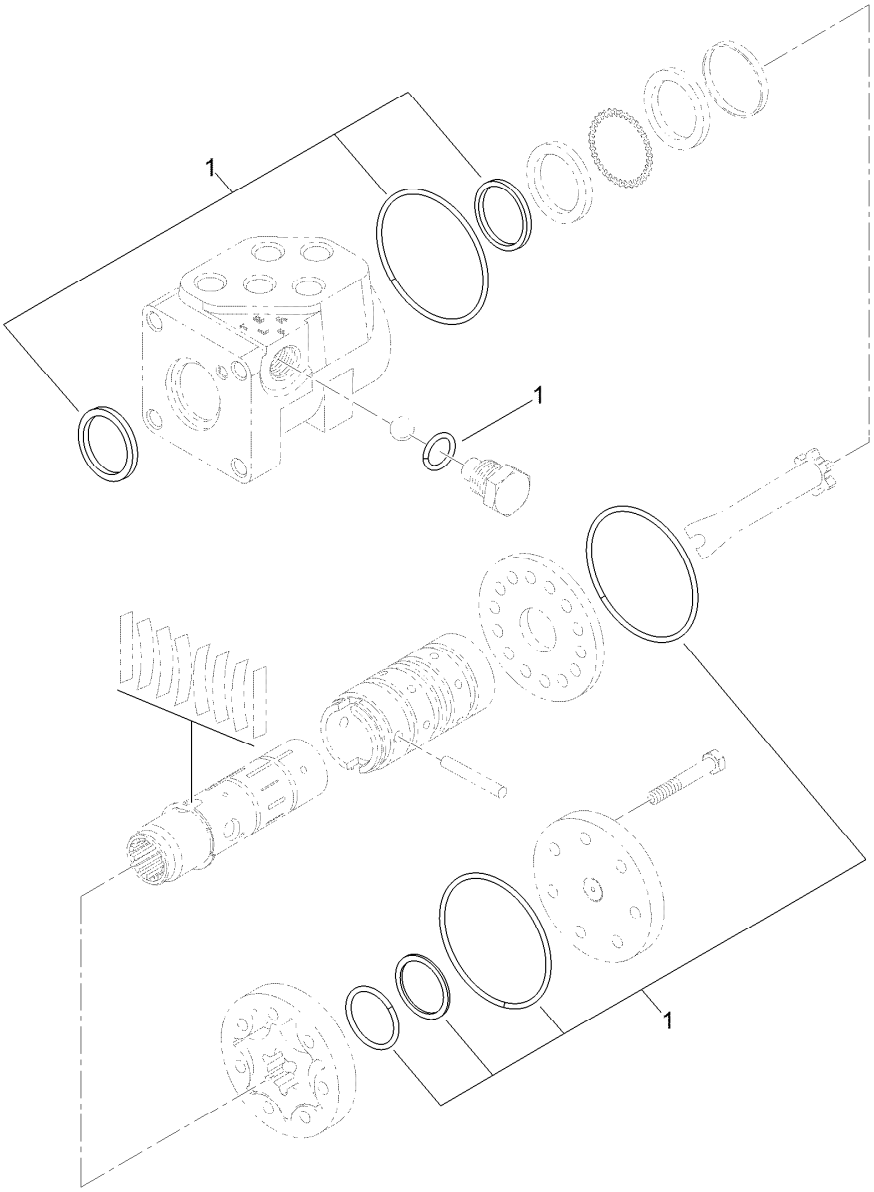

Steering Valve Assembly No. 130-7949

Ref.	*Part Number*	*Qty.*	*Description*
1	130-8358	1	Seal Kit

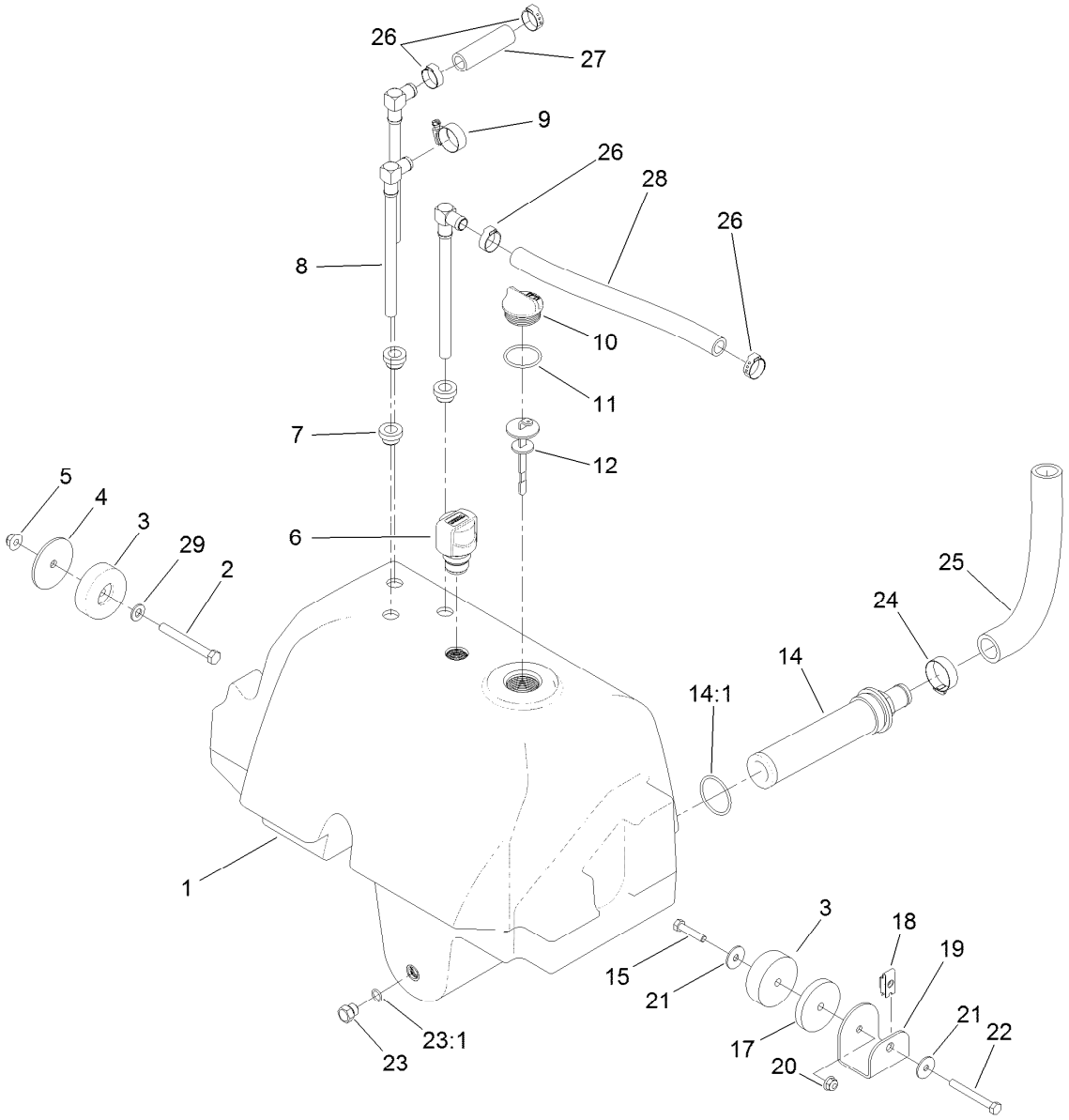

Hydraulic Reservoir Assembly

Ref.	Part Number	Qty.	Description
1	120-9077	1	Reservoir-HYD
2	323-20	1	Screw-HH
3	108-1605	2	Bumper-Recess
4	121-1456	1	Spacer-Thin
5	104-8301	1	Nut-HF, NI
6	115-9793	1	Breather
7	104-0790	3	Bushing
8	114-0002	3	Pipe-Stand
9	2412-129	1	Clamp-Hose
10	93-7498	1	Plug-Plastic
11	237-101	1	O-Ring
12	112-6365	1	Dipstick
14	104-7546	1	Tank Strainer ASM
14:1	340-136	1	O-Ring
15	322-7	1	Screw-HH

Ref.	Part Number	Qty.	Description
17	121-1533	1	Spacer-Thick
18	110-3510	1	Nut-Retainer
19	121-1557-03	1	Mount-Tank
20	104-8300	1	Nut-HF, NI
21	3256-82	2	Washer-Flat
22	322-13	1	Screw-HH
23	353-508	1	Plug-HH
23:1	237-42	1	O-Ring
24	2412-34	1	Clamp-Hose
25	120-8810	1	Hose-Strainer
26	115-5436	4	Clamp-Hose, Crimp
27	114-4920	1	Hose
28	121-1521	1	Hose
29	3256-24	1	Washer-Plain

Lift, Steer and Fan Hydraulic Assembly

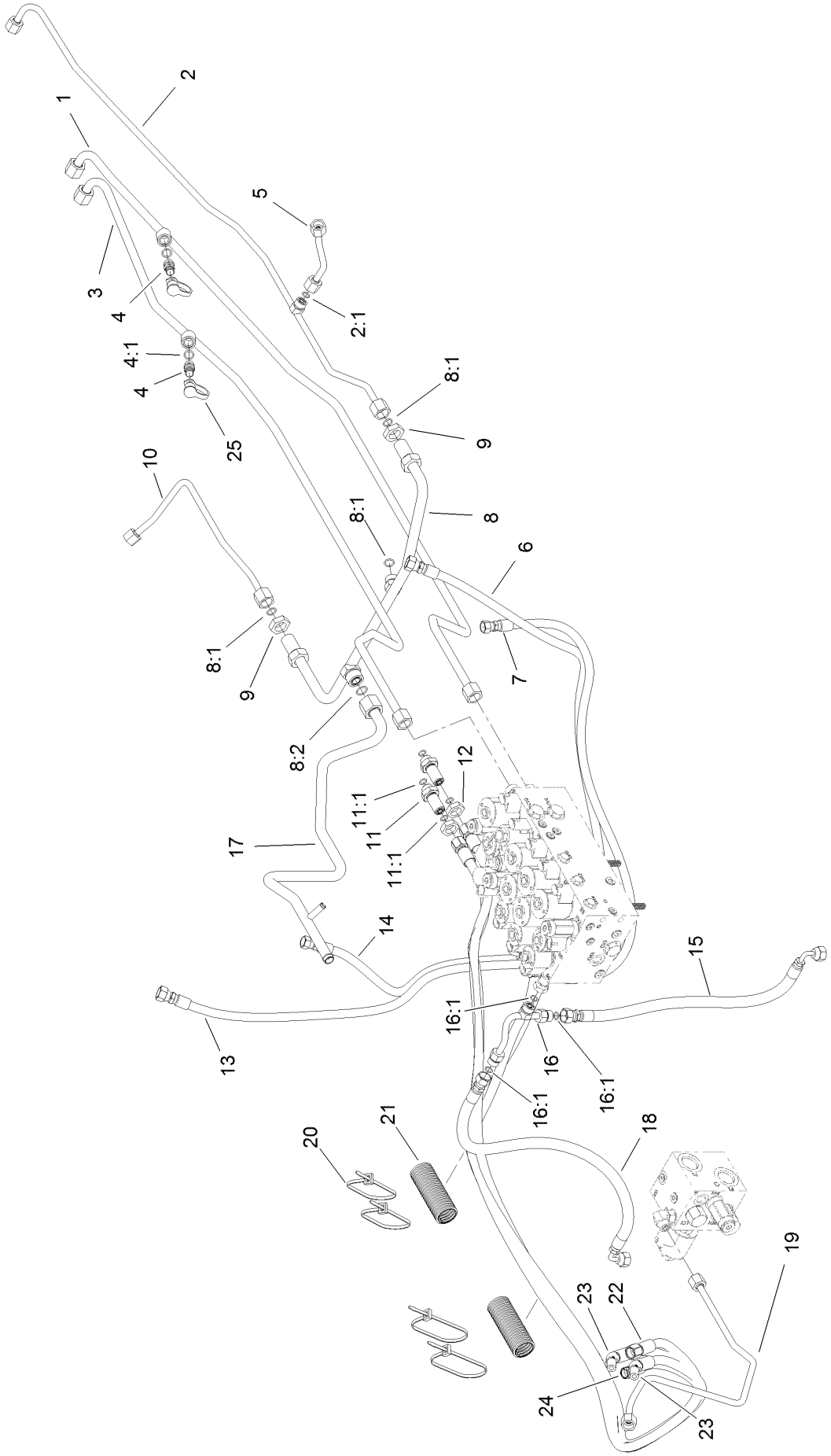

Lift, Steer and Fan Hydraulic Assembly (continued)

Ref.	Part Number	Qty.	Description
1	120-9074	1	Tube-Fan
2	120-8966	1	Tube-Drain, Fan
2:1	237-22	1	O-Ring
3	120-9075	1	Tube-Fan
4	59-7410	2	Fitting-Diagnostic
4:1	237-42	1	O-Ring
5	121-1523	1	Tube-HYD
6	127-3737	1	Hose-HYD
7	127-3738	1	Hose-HYD
8	121-1509	1	Tube-HYD
8:1	237-30	3	O-Ring
8:2	237-65	1	O-Ring
9	340-127	2	Nut-Bulkhead
10	121-1522	1	Tube-HYD
11	340-71	2	Fitting-Straight, Bulkhead
11:1	237-22	2	O-Ring
12	340-70	2	Nut-Lock
13	127-3736	1	Hose-HYD
14	100-3833	1	Hose-HYD
15	121-1567	1	Hose-HYD
16	121-1565	1	Tube-Tee
16:1	237-22	3	O-Ring
17	121-1510	1	Tube-HYD
18	121-1566	1	Hose-HYD
19	120-8848	1	Tube-HYD
20	3290-378	4	Tie-Cable
21	121-1544	2	Cover-Hose
22	121-1504	1	Hose-HYD
23	121-1491	2	Hose-HYD
24	121-1503	1	Hose-HYD
25	354-79	2	Cap-Dust

Traction Hydraulic Assembly

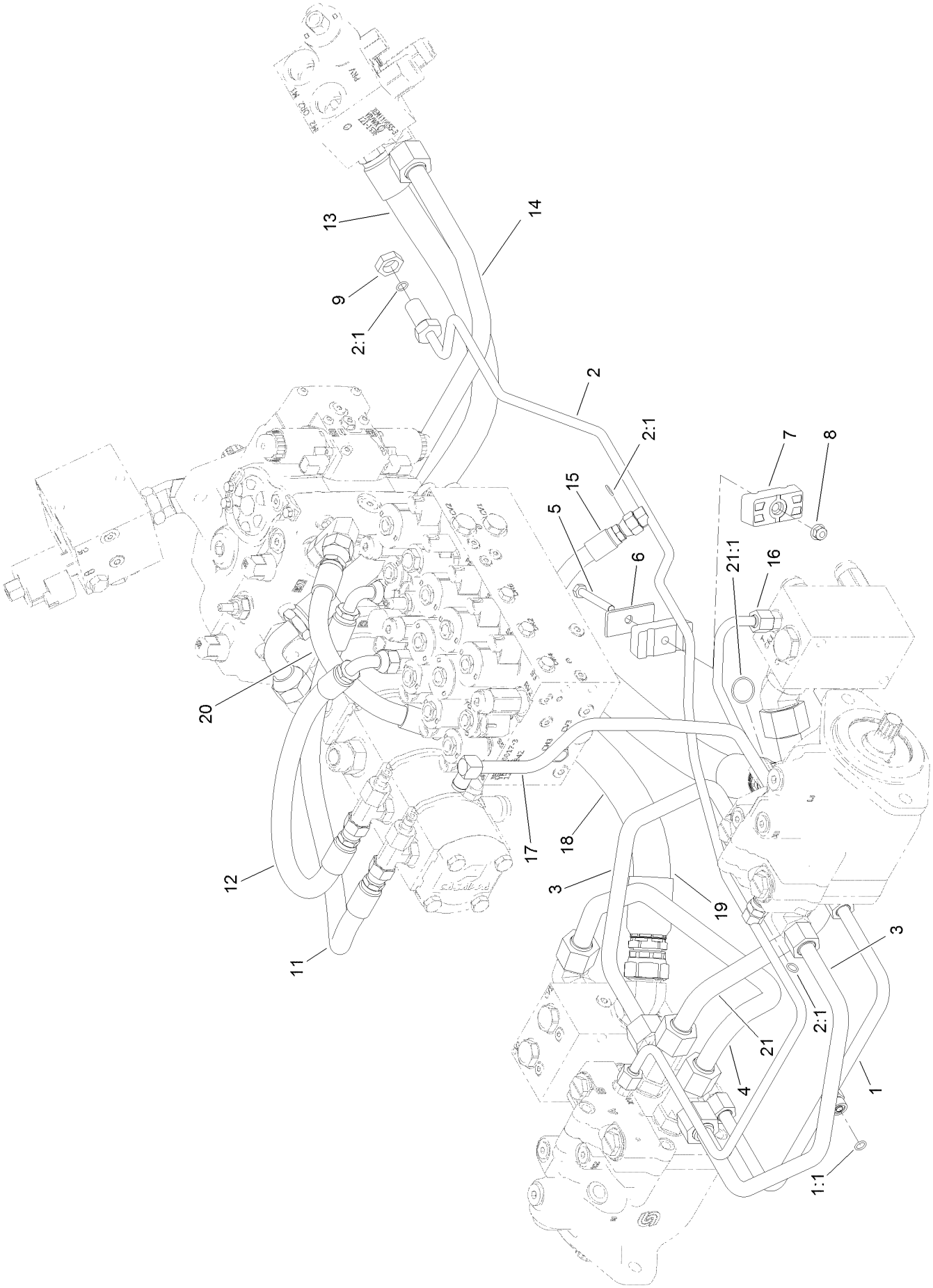

Traction Hydraulic Assembly (continued)

Ref.	Part Number	Qty.	Description
1	120-9080	1	Tube ASM
1:1	237-22	1	O-Ring
2	121-1552	1	Tube ASM
2:1	237-22	3	O-Ring
3	120-9079	2	Tube-HYD
4	121-1546	1	Tube-HYD
5	322-11	1	Screw-HH
6	69-9761	1	Plate-Cover
7	120-3200	2	Clamp-Tube
8	104-8300	1	Nut-HF, NI
9	340-70	1	Nut-Lock
11	104-2807	1	Hose-HYD
12	104-4584	1	Hose-HYD
13	115-4384	1	Hose-HYD
14	120-8834	1	Tube-PTO, LH To RH
15	104-2234	1	Hose-HYD
16	121-1480	1	Tube-HYD
17	120-8961	1	Tube-Return, Front
18	121-1564	1	Hose-HYD
19	121-1563	1	Hose-HYD
20	121-1505	1	Hose-HYD
21	121-1581	1	Tube-Tee
21:1	340-65	1	O-Ring

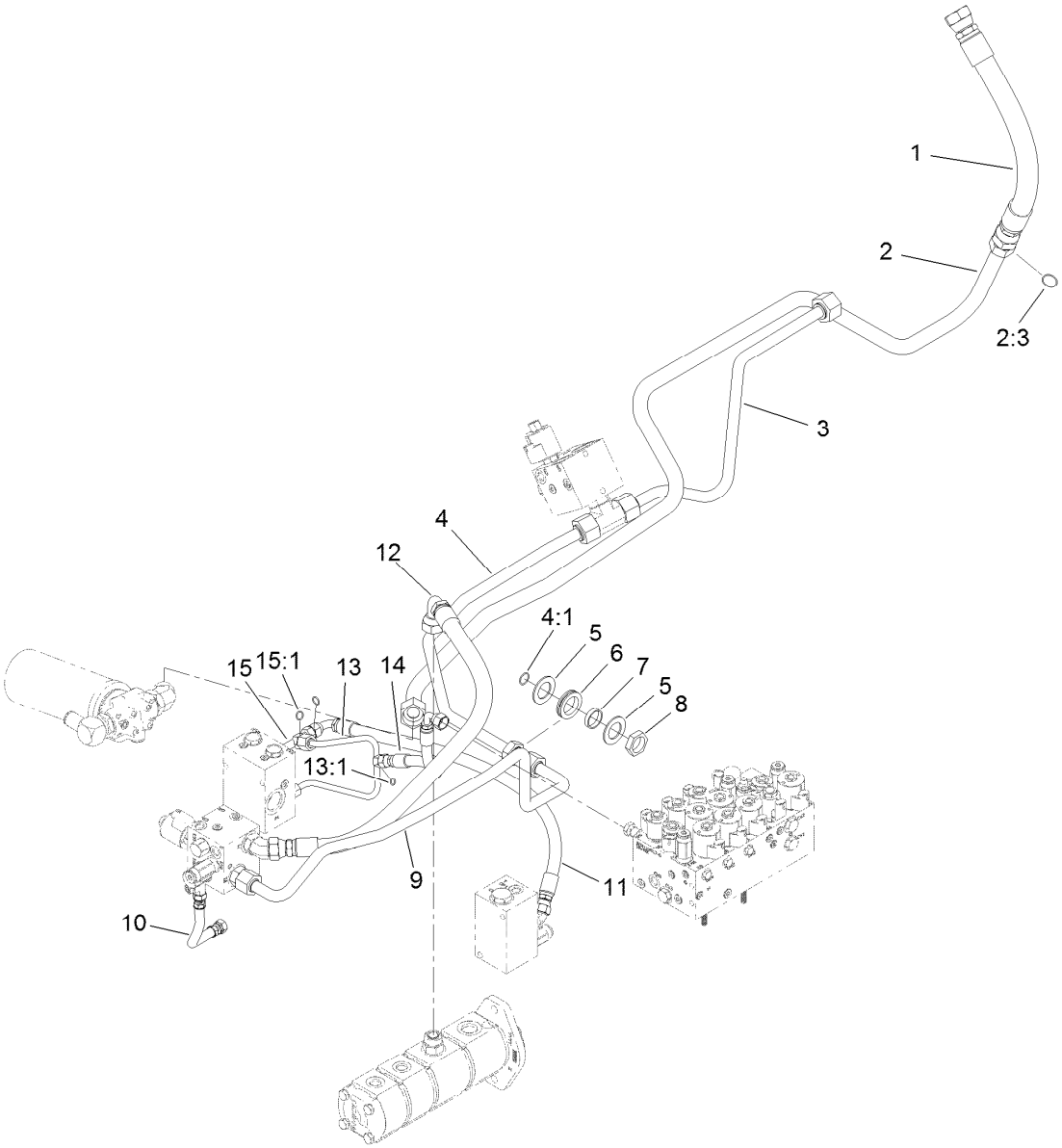

Oil Cooler Hydraulic Assembly

Ref.	Part Number	Qty.	Description
1	120-9060	1	Hose-HYD
2	121-1612	1	Tube ASM
2:3	340-65	1	O-Ring
3	121-1626	1	Tube-HYD
4	121-1507	1	Tube ASM
4:1	237-58	1	O-Ring
5	69-8910	2	Washer
6	240-7	1	Grommet-Rubber
7	69-8900	1	Spacer
8	340-126	1	Nut-Bulkhead

Ref.	Part Number	Qty.	Description
9	120-8838	1	Tube-PTO, Front Return
10	121-1572	1	Hose-HYD
11	121-1559	1	Hose-HYD
12	115-4384	1	Hose-HYD
13	121-1584	1	Tube-HYD
13:1	237-22	1	O-Ring
14	121-1583	1	Hose-HYD
15	121-1558	1	Fitting-Tee
15:1	237-30	2	O-Ring

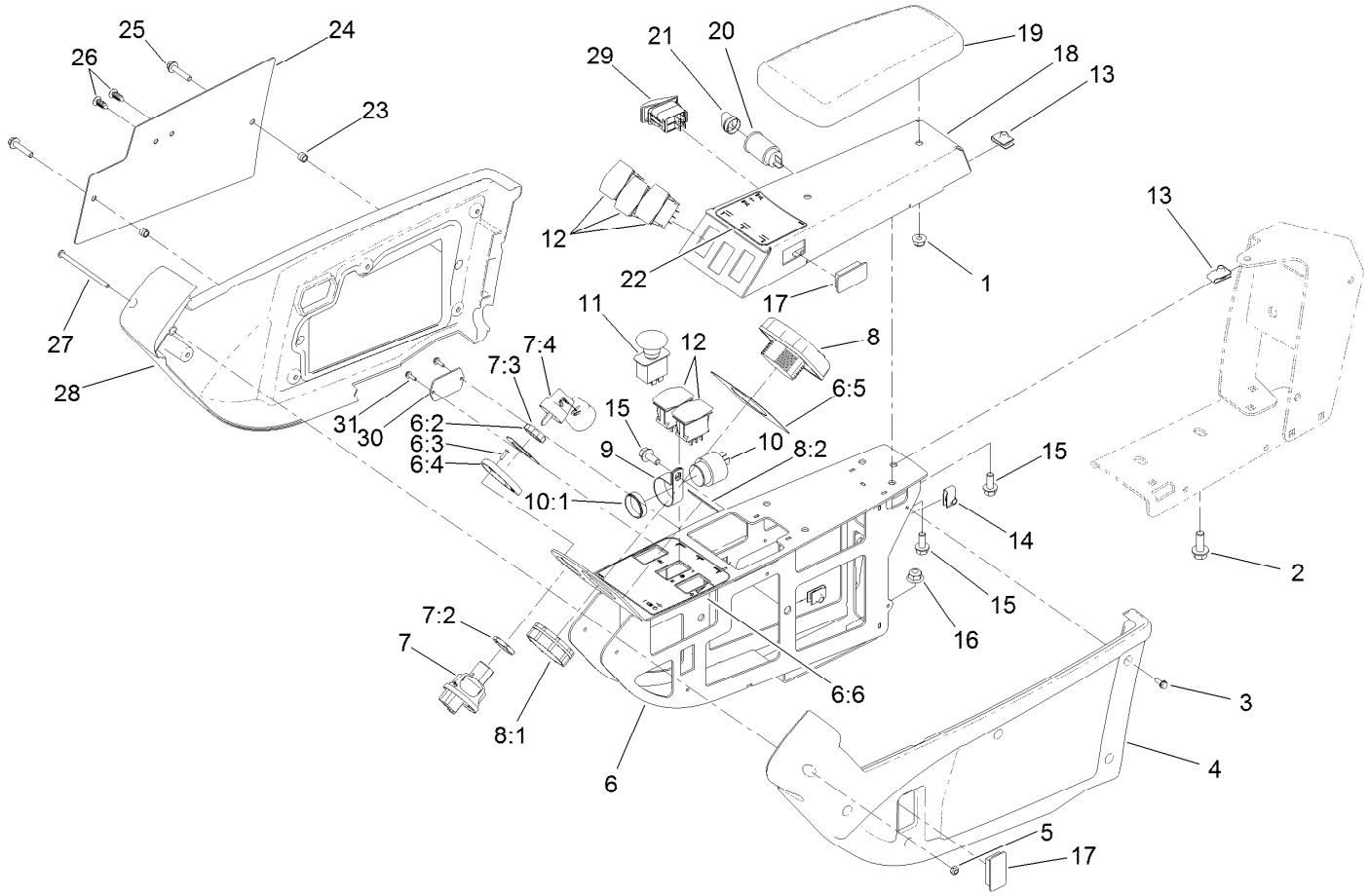

Armrest Control Panel Assembly

Ref.	Part Number	Qty.	Description
1	104-8300	2	Nut-HF, NI
2	3234-42	2	Screw-HHF
3	32144-112	10	Screw-HWH
4	108-7604	1	Cover-LH
5	3296-12	1	Nut-Lock, NI
6	120-4155	1	Panel ASM
6:2	121-3884	1	Decal-Console, Upper
6:3	3269-17	2	Rivet-Pop
6:4	121-3889	1	Step-Elevated, Switch
6:5	121-3887	1	Decal-Console, Display
6:6	120-4159	1	Decal-Console, Lower
7	121-5159	1	Switch-Ignition
7:2	121-5160	1	Nut-Hex
7:3	121-5161	1	Nut-Face
7:4	121-5162	1	Set-Key, Ignition
8	120-6310	1	LCD Display ASM Kantrak 1700
8:1	120-4630	1	Nut-Display
8:2	120-6311	1	Decal-Display
9	2412-74	1	R-Clamp
10	80-9330	1	Audio Alarm ASM

Ref.	Part Number	Qty.	Description
10:1	104-5107	1	Nut-Plastic, Knurled
11	93-9999	1	Switch-PTO
12	100-1535	5	Switch-Rocker, (On)-Off-(On)
13	94-2413	6	Nut-U
14	107069	2	Clip
15	3234-5	6	Screw-HHF
16	104-8301	2	Nut-HF, NI
17	99-7420	2	Plug-Hole
18	125-4646-03	1	Panel-Control
19	108-7602	1	Rest-Arm
20	99-7411	1	Point-Power
21	99-7416	1	Cap
22	127-3700	1	Decal-Lift
23	110-0542	2	Spacer-Flange
24	115-8849-03	1	Plate-Cover
25	3234-21	2	Screw-HHF
26	114-4899	2	Rivet-Push
27	3250-22	1	Screw-PPH
28	108-7605	1	Cover-RH
29	114-3329	1	Switch-Rocker

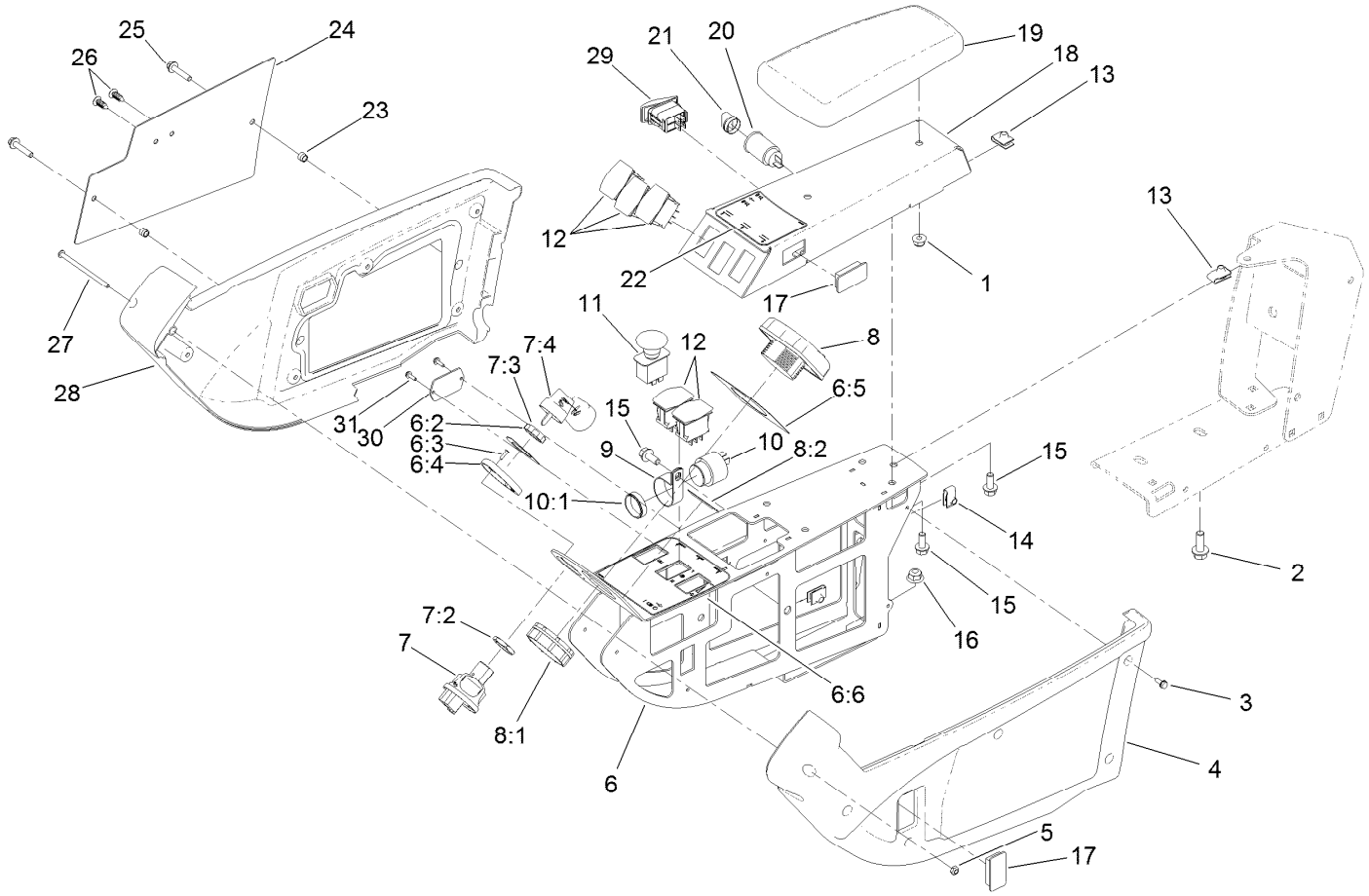

Armrest Control Panel Assembly (continued)

Ref.	*Part Number*	*Qty.*	*Description*
30	121-1630	1	Plate-Cover
31	32144-18	2	Screw-HWH

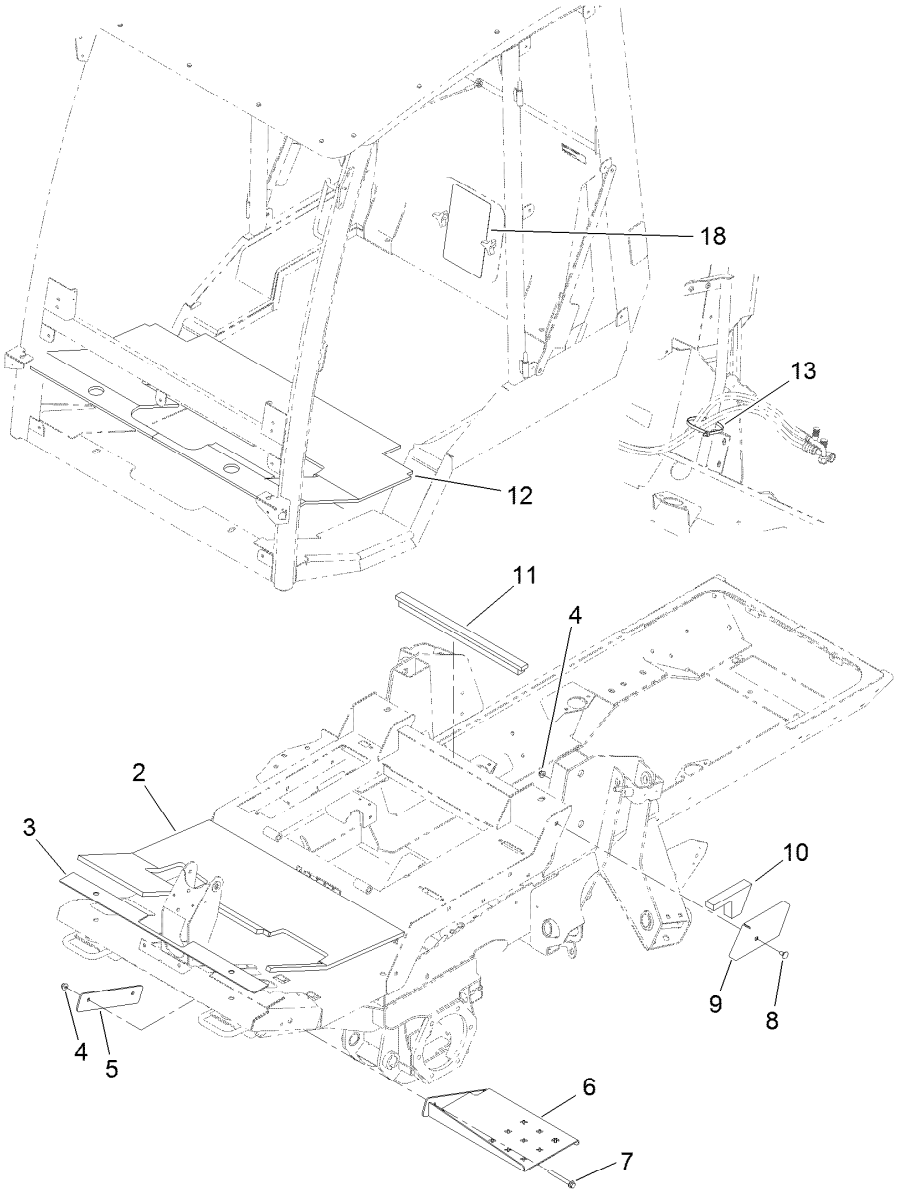

Cab Step, Pad and Flooring Assembly

Ref.	*Part Number*	*Qty.*	*Description*
2	121-8543	1	Foam-Tread
3	121-8544	1	Gasket-Front
4	104-8301	3	Nut-HF, NI
5	120-9022-03	1	Support-Step
6	121-1739-03	1	Step
7	116-4701	2	Screw-HHF
8	3231-1	1	Screw-CARR
9	130-5747-03	1	Cover-Mount
10	127-9861	1	Foam-Corner
11	121-8548	1	Foam-Seal, Rear
12	130-5979	1	Tread-Floor
13	3334-945	1	Tie-Cable
18	130-6046	1	Decal-Service

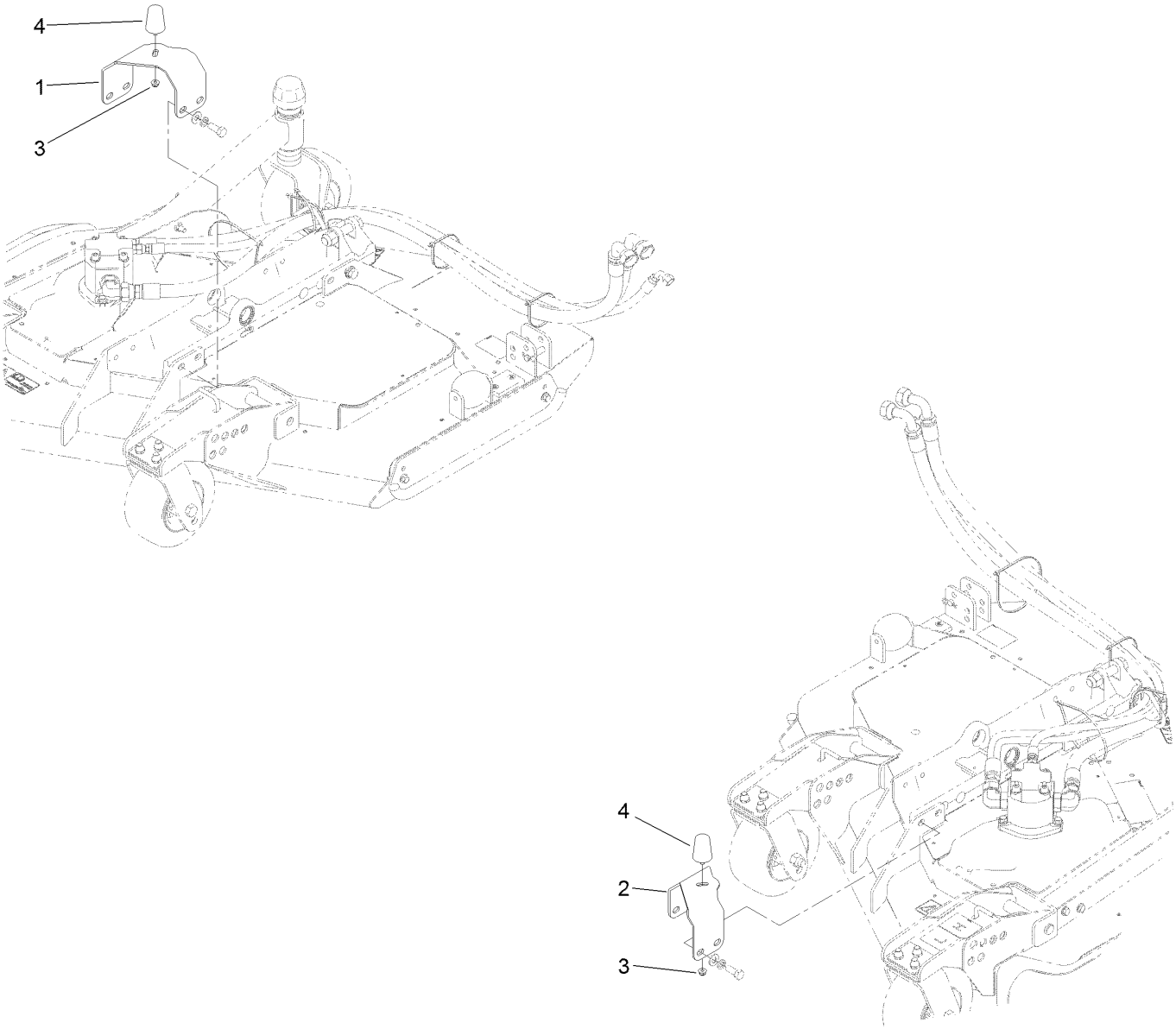

Deck Pad and Hardware Assembly

Ref.	*Part Number*	*Qty.*	*Description*
1	130-5966-03	1	Bracket-Bumper, RH
2	130-5965-03	1	Bracket-Bumper, LH
3	104-8300	2	Nut-HF, NI
4	110-5070	2	Bumper

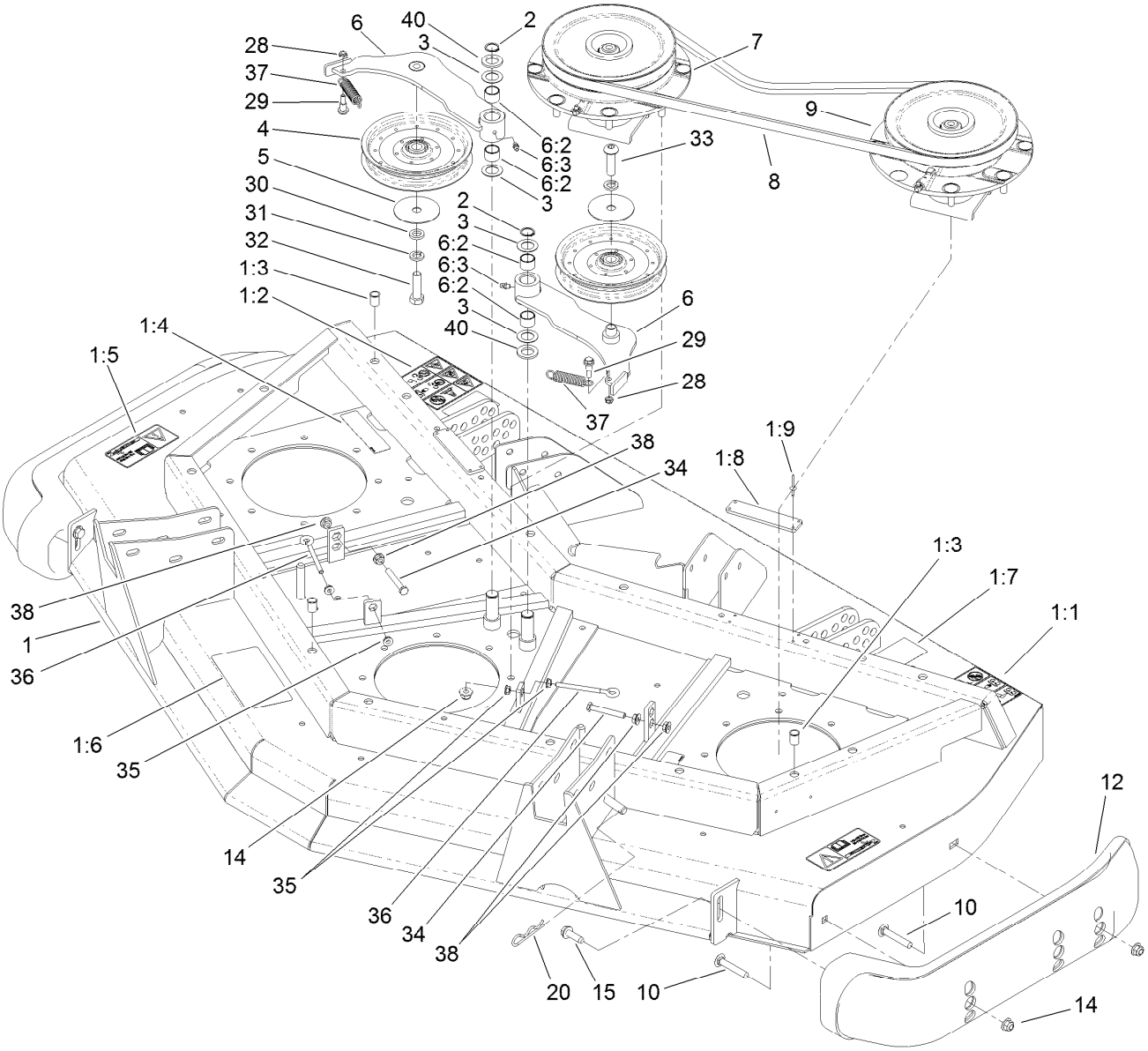

Front Deck, Idler and Skid Assembly

Ref.	Part Number	Qty.	Description
1	120-4052	1	Front Deck ASM
1:1	120-6604	2	Decal-Danger
1:2	100-5624	1	Decal-HOC, RH
1:3	32148-9	3	Nut-Clinch
1:4	100-6578	4	Decal-Danger
1:5	93-7818	2	Decal-Torque, Blade Bolt
1:6	100-5622	1	Decal-HOC
1:7	104-3578	1	Decal-HOC, LH
1:8	105-0786	2	Pad-Plastic
1:9	3269-8	8	Rivet-Blind
2	32120-72	2	Ring-Snap
3	3-6498	4	Washer-Thrust
4	110-9596	2	Pulley-Idler
5	100-3102	2	Washer-Flat
6	110-6128	2	Idler Arm ASM
6:2	256-76	2	Bushing
6:3	302-5	1	Fitting-Grease
7	119-4548	1	Double Driven Spindle ASM
8	108-8076	2	V-Belt, Deck

Ref.	Part Number	Qty.	Description
9	119-4549	1	High-Driven Spindle ASM
10	3231-33	4	Screw-CARR
12	112-1479	2	Skid-Bumper, Deck
14	104-8301	24	Nut-HF, NI
15	9136144	2	Screw-HWHTF
20	3290-355	1	Pin-Hair
28	3296-56	2	Nut-Lock, NI
29	104-0858	2	Bolt-Shoulder
30	9202424	1	Spacer
31	3253-7	2	Washer-Lock
32	325-7	1	Screw-HH
33	108-1993	1	Screw-HSBH
34	9114524	2	Bolt-TAP, HH
35	32128-14	4	Nut-HF
36	68-0090	2	Screw-Adjusting
37	107938	2	Spring-Extension
38	32128-26	4	Nut-HF
40	70-1160	2	Washer

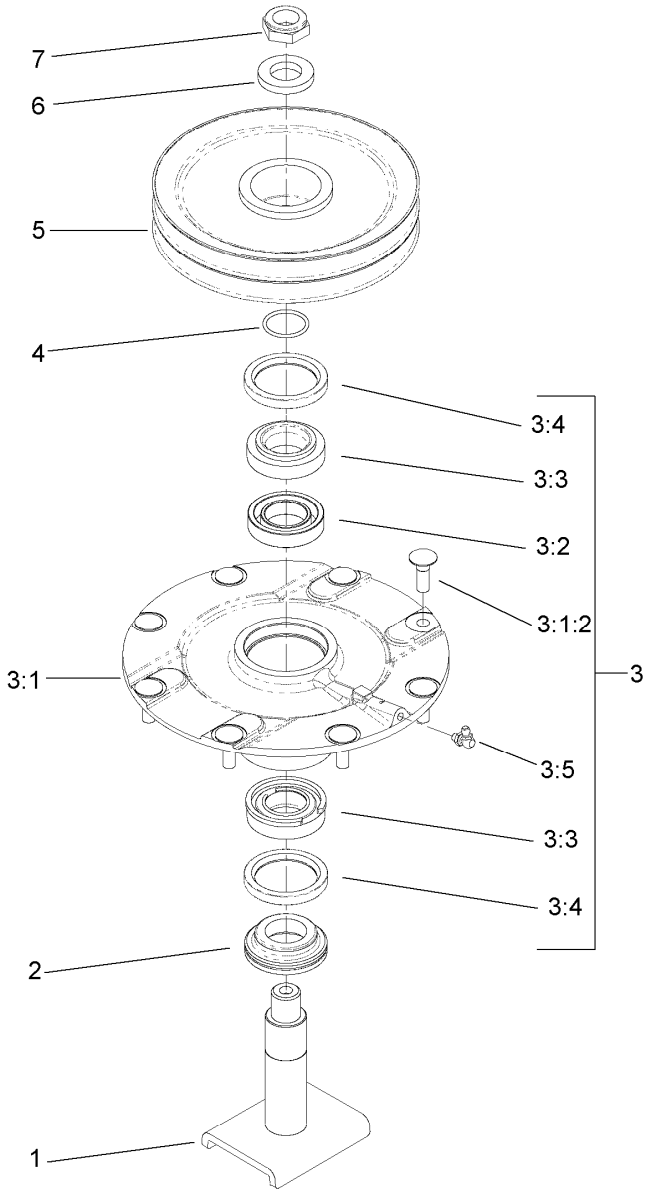

Double Driven Spindle Assembly No. 119-4548

Ref.	*Part Number*	*Qty.*	*Description*
1	104-3554	1	Shaft-Spindle
2	69-6950	1	Spacer-Shaft, Spindle
3	119-4775	1	Spindle Housing ASM
3:1		1	Spindle ASM ●
3:1:2	114-8195	8	Bolt-Neck, Ribbed
3:2	120-5577	1	Bearing Spacer Set
3:3	110-8297	1	Bearing ASM
3:4	253-154	2	Seal-Oil
3:5	302-60	1	Fitting-Grease
4	106-7159	1	O-Ring
5	104-3547	1	Pulley-Driven, Double
6	120-5576	1	Washer-Hardened
7	3296-60	1	Nut-Lock, NI

● Not serviced separately

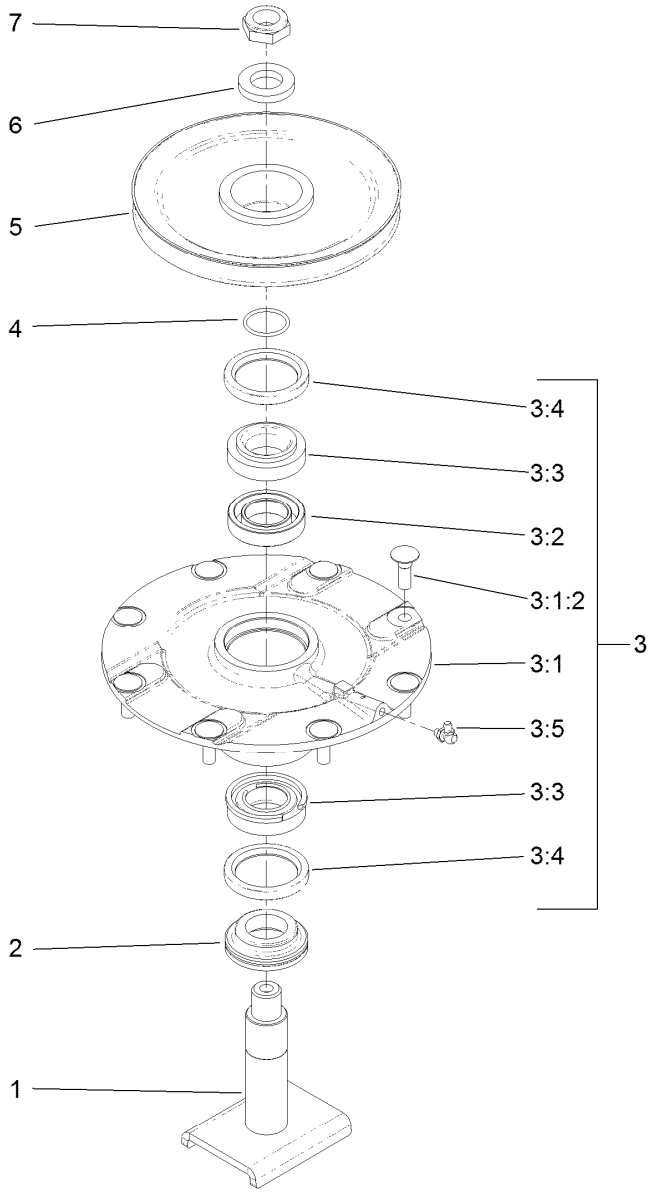

High Driven Spindle Assembly No. 119-4549

Ref.	Part Number	Qty.	Description
1	104-3554	1	Shaft-Spindle
2	69-6950	1	Spacer-Shaft, Spindle
3	119-4775	1	Spindle Housing ASM
3:1		1	Spindle ASM ●
3:1:2	114-8195	8	Bolt-Neck, Ribbed
3:2	120-5577	1	Bearing Spacer Set
3:3	110-8297	1	Bearing ASM
3:4	253-154	2	Seal-Oil
3:5	302-60	1	Fitting-Grease
4	106-7159	1	O-Ring
5	104-3548	1	Pulley-Driven, High
6	120-5576	1	Washer-Hardened
7	3296-60	1	Nut-Lock, NI

● Not serviced separately

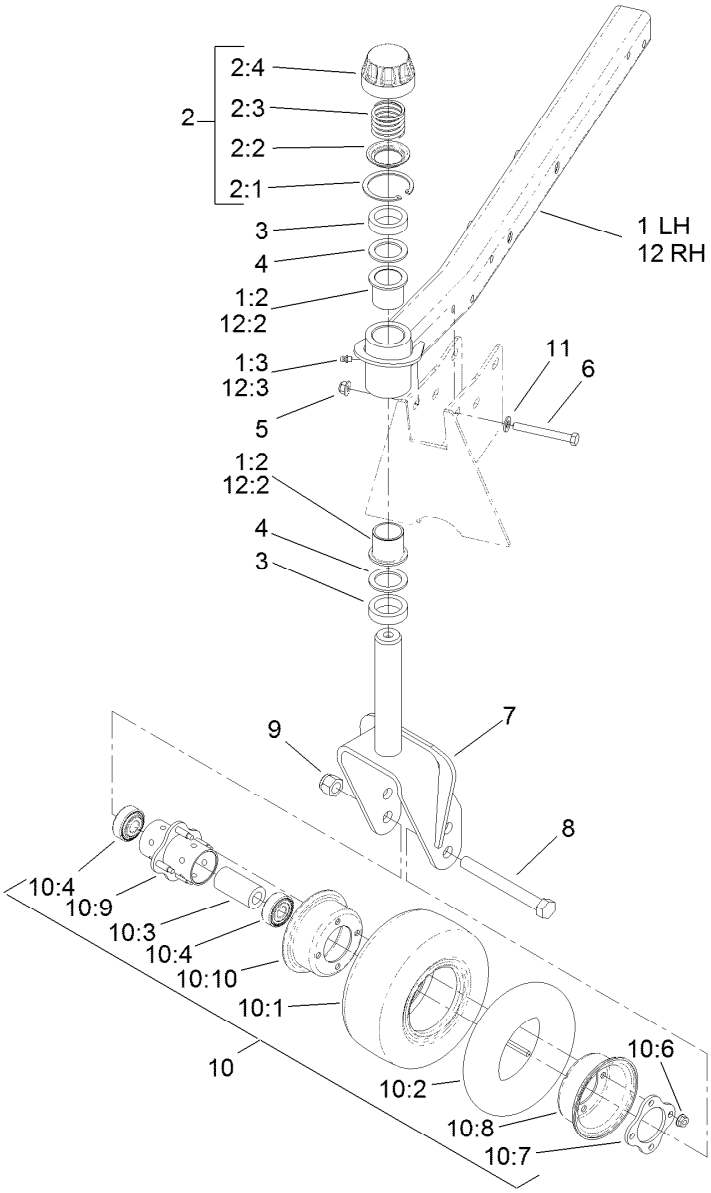

Front Deck Caster Arm and Wheel Assembly

Ref.	Part Number	Qty.	Description
1	127-3730	1	LH Castor Arm ASM
1:2	69-6470	2	Bushing-Caster
1:3	302-5	1	Fitting-Grease
2	92-9727	2	HOC Cap ASM
2:1	92-5581	1	Ring-Rtng,Snap,Int,Flat
2:2	92-5583	1	Washer-Cap
2:3	92-9726	1	Spring-Compression
2:4	92-8861	1	Cap-HOC
3	69-1510	10	Spacer
4	69-6860	6	Washer-Thrust
5	104-8301	10	Nut-HF, NI
6	323-20	10	Screw-HH
7	104-0762-01	2	Fork-Castor
8	327-24	2	Screw-HH
9	3296-53	2	Nut-Lock, NI
10	93-5974	2	8 Inch Foam Filled Wheel ASM ●

Ref.	Part Number	Qty.	Description
10	93-9938	2	Wheel ASM
10:1	93-9939	1	Tire
10:2	68-8950	1	Tube-Inner (W/Valve)
10:3	93-4241	1	Spacer-Bearing, Inner
10:4	120-3366	2	Bearing
10:6	32128-16	4	Nut-HHF
10:7	93-4242	1	Plate
10:8	93-4239	1	Rim-Wheel, Half
10:9	93-5980	1	Hub
10:10	95-2741	1	Rim-Wheel, Half
11	3256-24	10	Washer-Plain
12	127-3720	1	RH Castor Arm ASM
12:2	69-6470	2	Bushing-Caster
12:3	302-5	1	Fitting-Grease

● Optional Equipment

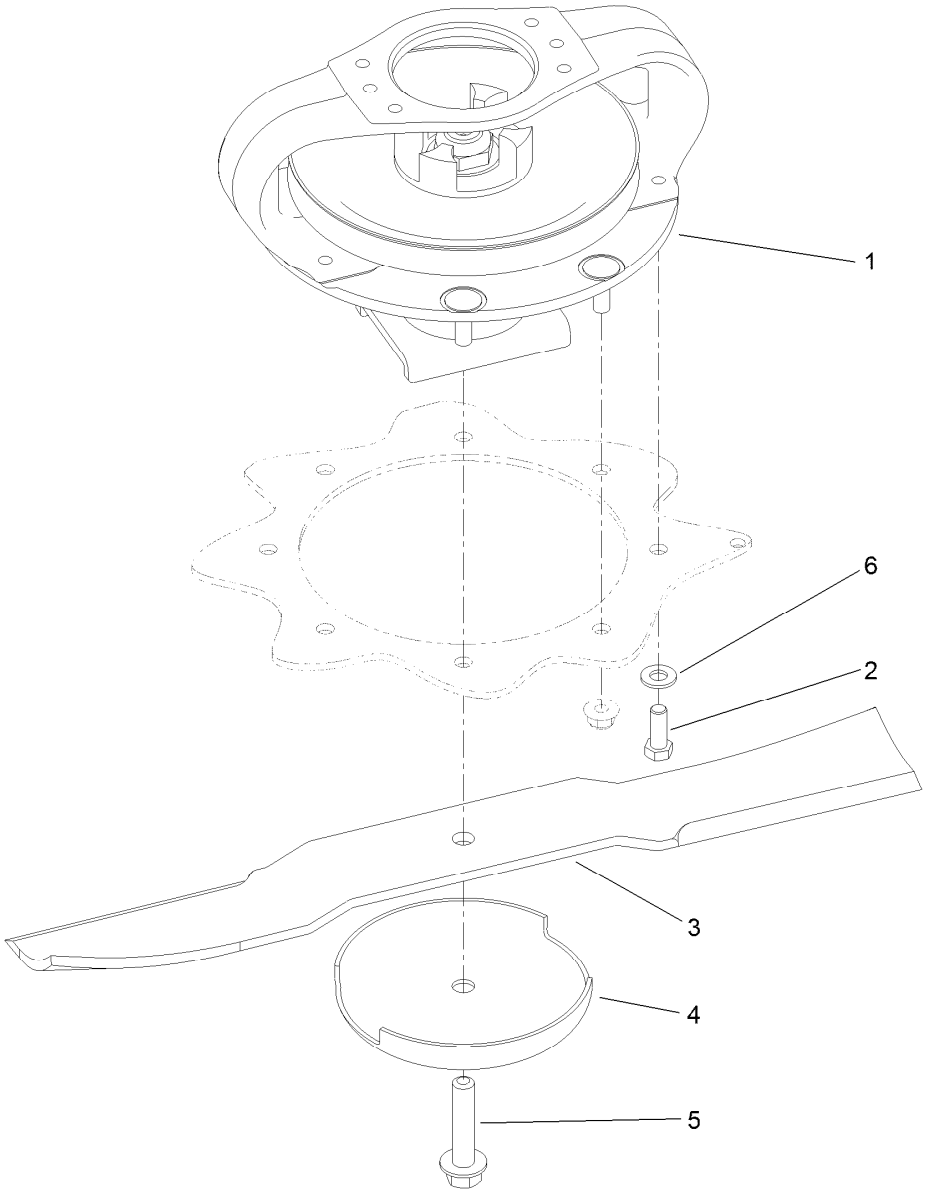

Driving Spindle Assembly

Ref.	Part Number	Qty.	Description
1	119-4547	1	Driving Spindle ASM
2	323-6	4	Screw-HH
3	92-5608-03	3	Blade
4	72-9361	3	Cup-Scalp, Anti
5	92-5816	3	Bolt-Blade
6	3256-24	4	Washer-Plain

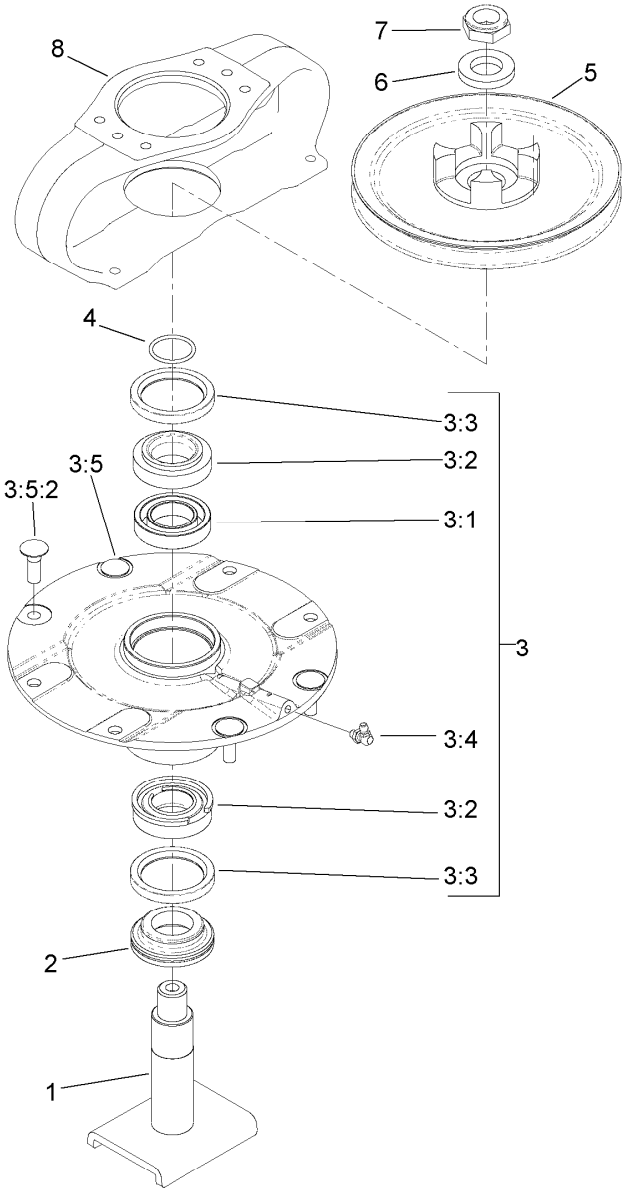

Driving Spindle Assembly No. 119-4547

Ref.	Part Number	Qty.	Description
1	104-3554	1	Shaft-Spindle
2	69-6950	1	Spacer-Shaft, Spindle
3	119-4546	1	Spindle Housing ASM
3:1	120-5577	1	Bearing Spacer Set
3:2	110-8297	1	Bearing ASM
3:3	253-154	2	Seal-Oil
3:4	302-60	1	Fitting-Grease
3:5		1	Spindle Assembly ●
3:5:2	114-8195	4	Bolt-Neck, Ribbed
4	106-7159	1	O-Ring
5	104-3545	1	Pulley-Driving
6	120-5576	1	Washer-Hardened
7	3296-60	1	Nut-Lock, NI
8	104-3544	1	Mount-Motor, Drive

● Not serviced separately

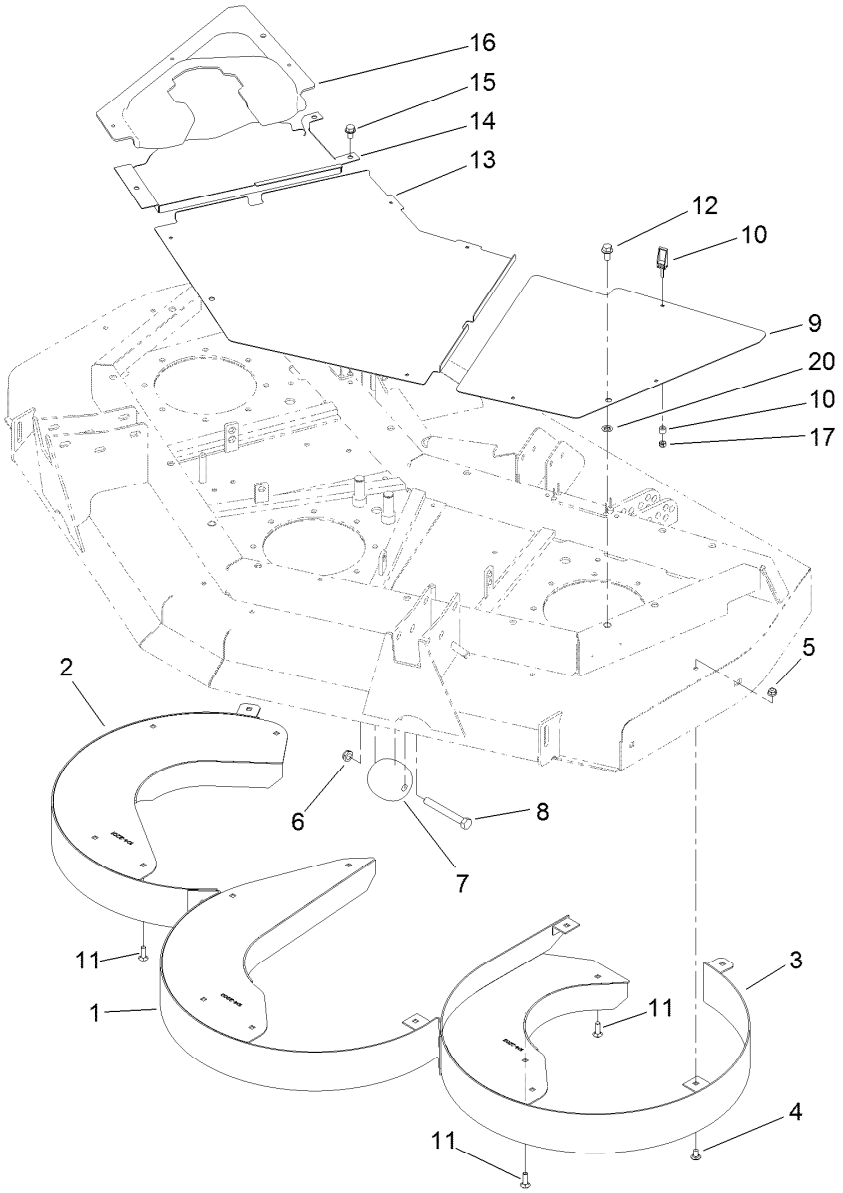

Front Deck Chamber and Cover Assembly

Ref.	Part Number	Qty.	Description
1	104-2200-01	1	Chamber-Center
2	104-2201-01	1	Chamber-RH
3	104-2202-01	1	Chamber-LH
4	3230-18	15	Screw-CARR
5	104-8300	18	Nut-HF, NI
6	3296-45	2	Nut-Hex
7	29-4820	2	Roller
8	325-17	2	Screw-HH
9	100-5663-03	1	Cover-Front, LH

Ref.	Part Number	Qty.	Description
10	74-5950	10	Latch-Swell
11	3230-22	3	Screw-CARR
12	3234-1	3	Screw-HHF
13	100-5660-03	1	Cover-Front, Center
14	100-5662-03	1	Cover-Front, RH
15	32144-69	3	Screw-HWHTF
16	100-5661	1	Cover-Front, Center
17	1-804254	10	Nut-Lock, HH
20	107-3154	3	Nut-Push

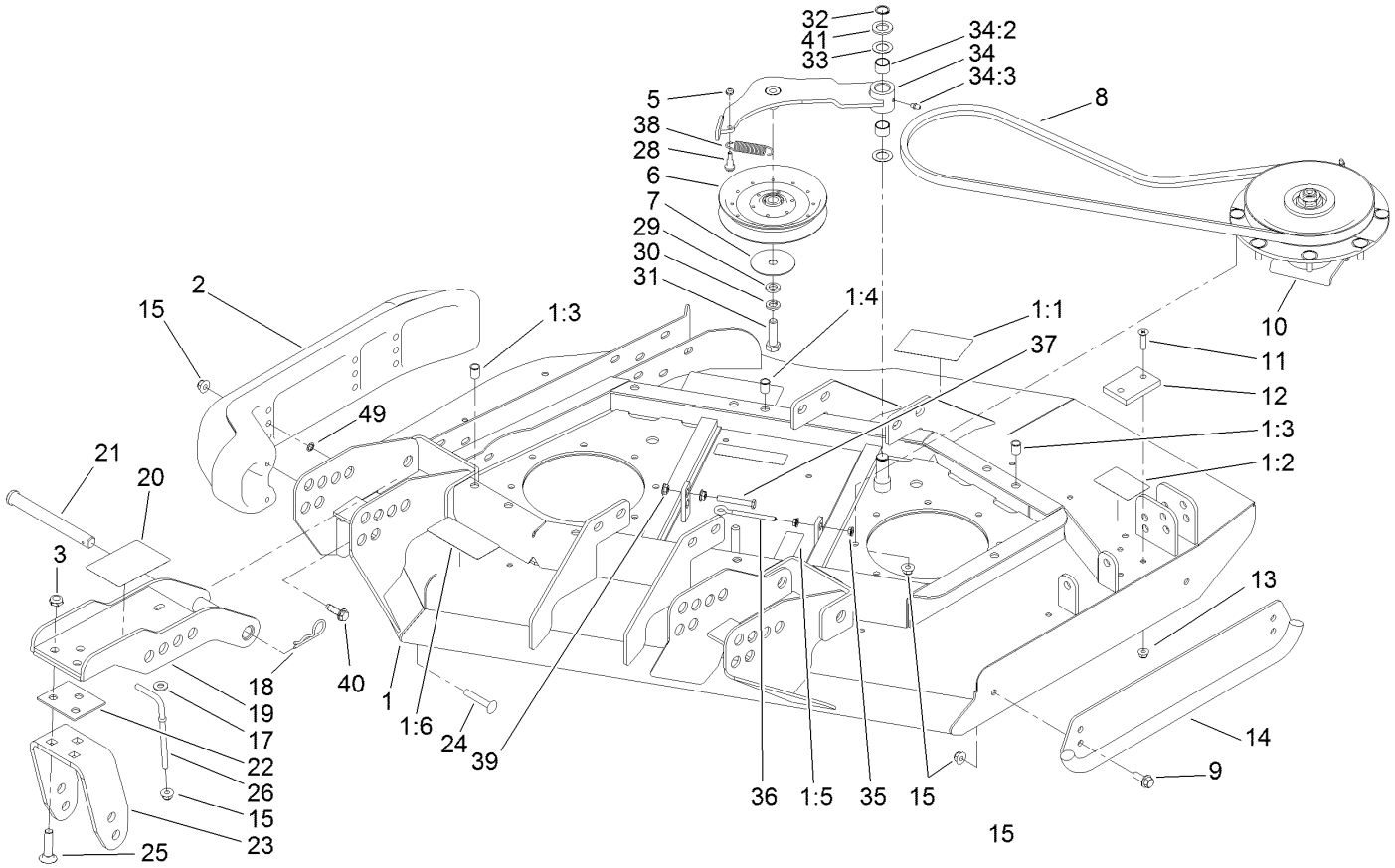

Right Deck, Idler and Skid Assembly

Ref.	Part Number	Qty.	Description
1	120-4062	1	Right Deck ASM
1:1	120-6604	1	Decal-Danger
1:2	100-5694	1	Decal-Rear HOC, RH
1:3	32148-9	3	Nut-Clinch
1:4	100-5622	1	Decal-HOC
1:5	100-6578	3	Decal-Danger
1:6	93-7818	1	Decal-Torque, Blade Bolt
2	112-1479	1	Skid-Bumper, Deck
3	3296-45	6	Nut-Hex
5	3296-56	1	Nut-Lock, NI
6	110-9596	1	Pulley-Idler
7	100-3102	1	Washer-Flat
8	108-8076	1	V-Belt, Deck
9	3234-42	2	Screw-HHF
10	119-4776	1	Low-Driven Spindle ASM
11	32108-103	2	Screw-FH
12	69-9290	1	Pad-Bumper
13	104-8300	2	Nut-HF, NI
14	104-2250-01	1	Skid-Side
15	104-8301	18	Nut-HF, NI
17	3256-3	2	Washer-Flat

Ref.	Part Number	Qty.	Description
18	3290-343	4	Pin-Hair
19	104-7529-01	2	Bracket-Castor
20	100-5623	1	Decal-HOC
21	100-5569	4	Pin-Clevis
22	104-7524	8	Shim
23	121-1720-01	2	Bracket-Fork
24	3231-33	2	Screw-CARR
25	3233-4	6	Screw-CARR
26	106-2047	2	Rod-Tension
28	104-0858	1	Bolt-Shoulder
29	9202424	1	Spacer
30	3253-7	1	Washer-Lock
31	325-7	1	Screw-HH
32	32120-72	1	Ring-Snap
33	3-6498	2	Washer-Thrust
34	110-6128	1	Idler Arm ASM
34:2	256-76	2	Bushing
34:3	302-5	1	Fitting-Grease
35	32128-14	2	Nut-HF
36	68-0090	1	Screw-Adjusting
37	9114524	1	Bolt-TAP, HH

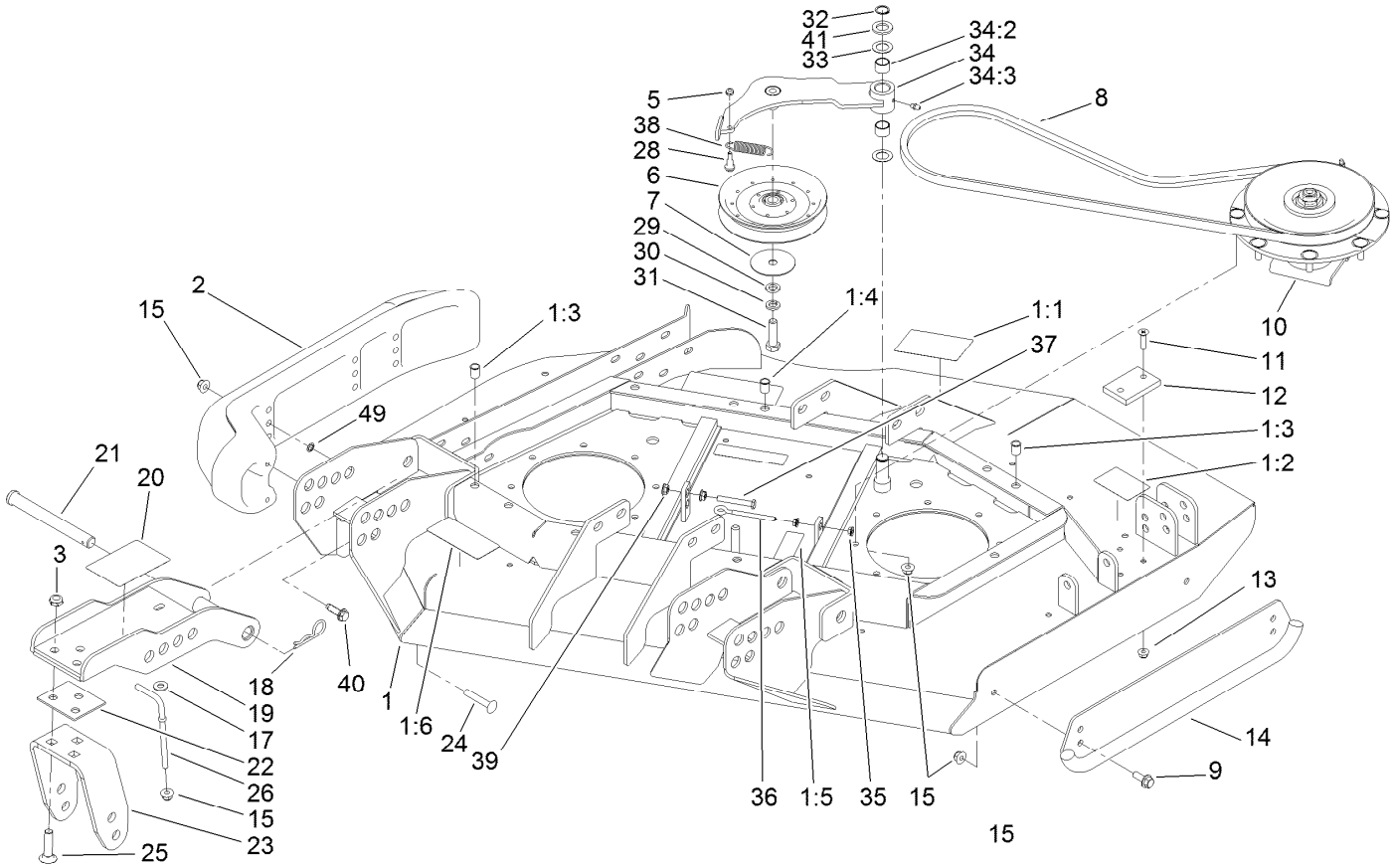

Right Deck, Idler and Skid Assembly (continued)

Ref.	Part Number	Qty.	Description
38	107938	1	Spring-Extension
39	32128-26	2	Nut-HF
40	9136144	1	Screw-HWHTF

Ref.	Part Number	Qty.	Description
41	70-1160	1	Washer
49	32151-72	2	Ring-Retaining

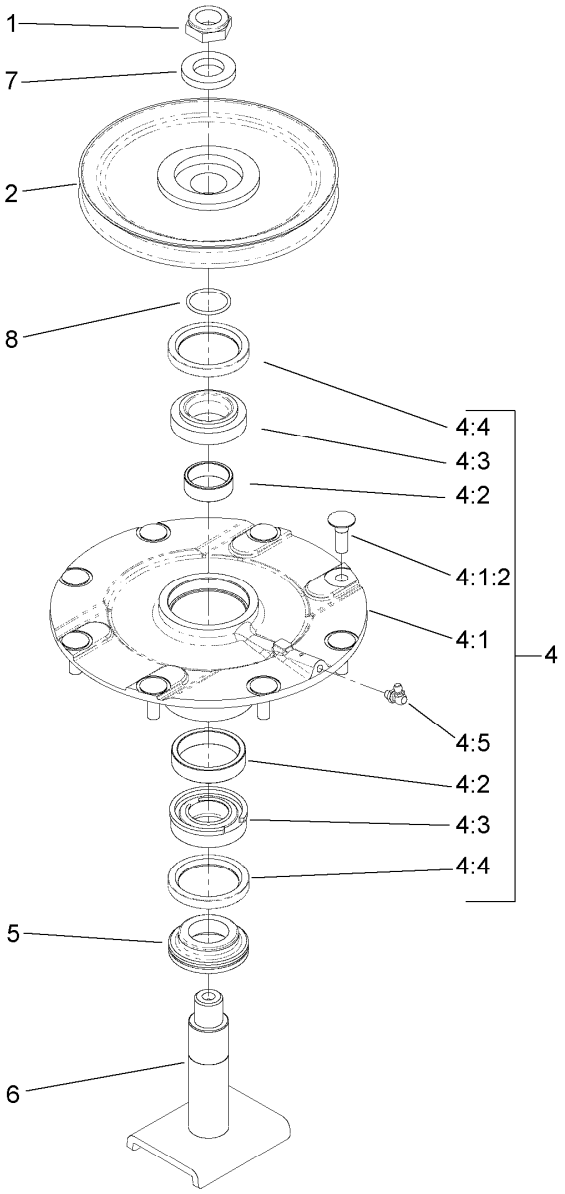

Low Driven Spindle Assembly No. 119-4776

Ref.	Part Number	Qty.	Description
1	3296-60	1	Nut-Lock, NI
2	104-3546	1	Pulley-Driven, Low
4	119-4775	1	Spindle Housing ASM
4:1		1	Spindle ASM ●
4:1:2	114-8195	8	Bolt-Neck, Ribbed
4:2	120-5577	1	Bearing Spacer Set
4:3	110-8297	1	Bearing ASM
4:4	253-154	2	Seal-Oil
4:5	302-60	1	Fitting-Grease
5	69-6950	1	Spacer-Shaft, Spindle
6	104-3554	1	Shaft-Spindle
7	120-5576	1	Washer-Hardened
8	106-7159	1	O-Ring

● Not serviced separately

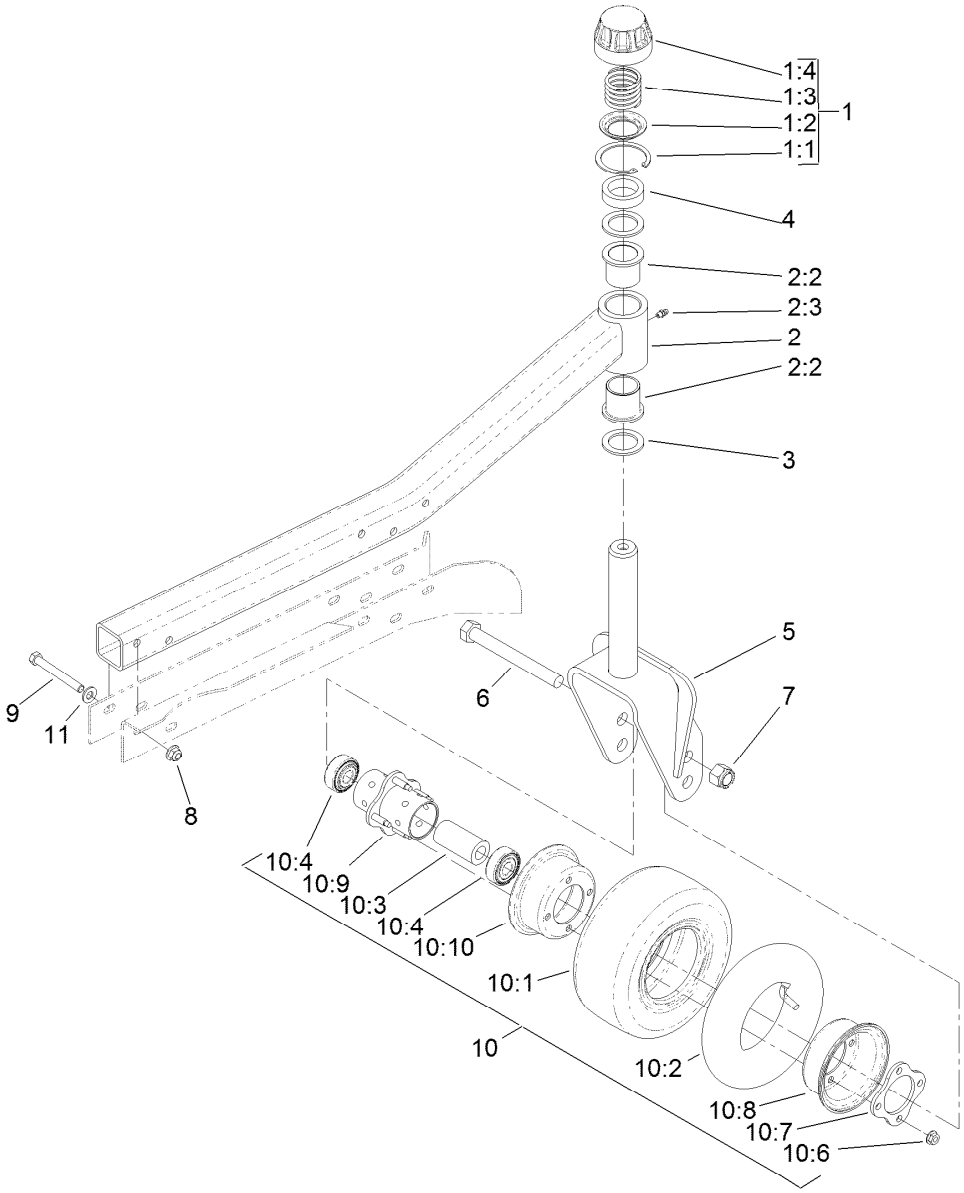

Right Hand and Left Hand Castor Arm and Wheel Assembly

Ref.	Part Number	Qty.	Description
1	92-9727	1	HOC Cap ASM
1:1	92-5581	1	Ring-Rtng,Snap,Int,Flat
1:2	92-5583	1	Washer-Cap
1:3	92-9726	1	Spring-Compression
1:4	92-8861	1	Cap-HOC
2	127-3740	1	Castor Arm ASM
2:2	69-6470	2	Bushing-Caster
2:3	302-5	1	Fitting-Grease
3	69-6860	3	Washer-Thrust
4	69-1510	5	Spacer
5	104-0762-01	1	Fork-Castor
6	327-24	3	Screw-HH
7	3296-53	3	Nut-Lock, NI
8	104-8301	5	Nut-HF, NI

Ref.	Part Number	Qty.	Description
9	323-20	5	Screw-HH
10	93-5974	3	8 Inch Foam Filled Wheel ASM ●
10	93-9938	3	Wheel ASM
10:1	93-9939	1	Tire
10:2	68-8950	1	Tube-Inner (W/Valve)
10:3	93-4241	1	Spacer-Bearing, Inner
10:4	120-3366	2	Bearing
10:6	32128-16	4	Nut-HHF
10:7	93-4242	1	Plate
10:8	93-4239	1	Rim-Wheel, Half
10:9	93-5980	1	Hub
10:10	95-2741	1	Rim-Wheel, Half
11	3256-24	5	Washer-Plain

● Optional Equipment

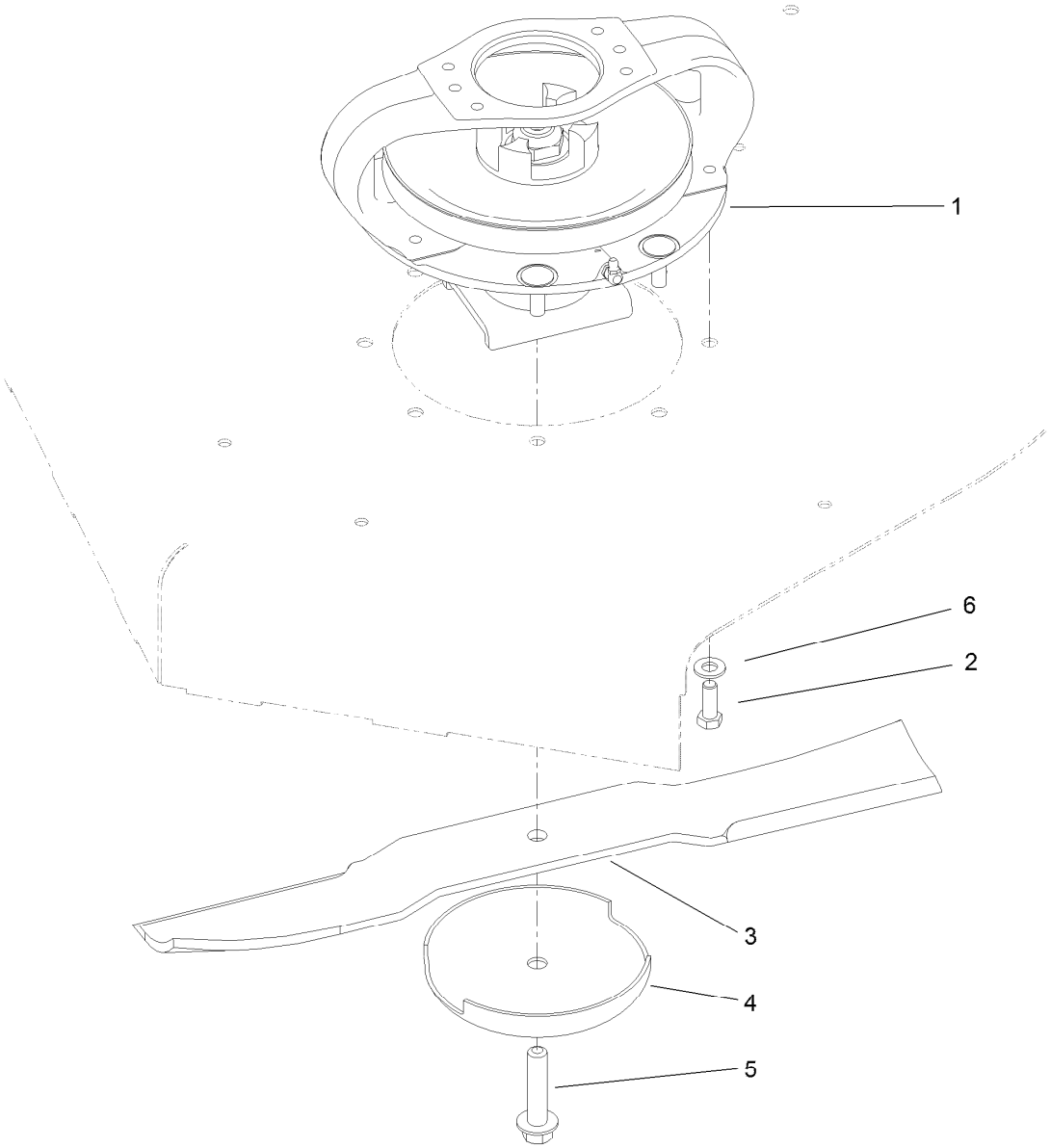

Deck Driving Spindle Assembly

Ref.	Part Number	Qty.	Description
1	119-4547	1	Driving Spindle ASM
2	323-6	4	Screw-HH
3	92-5608-03	2	Blade
4	72-9361	2	Cup-Scalp, Anti
5	92-5816	2	Bolt-Blade
6	3256-24	4	Washer-Plain

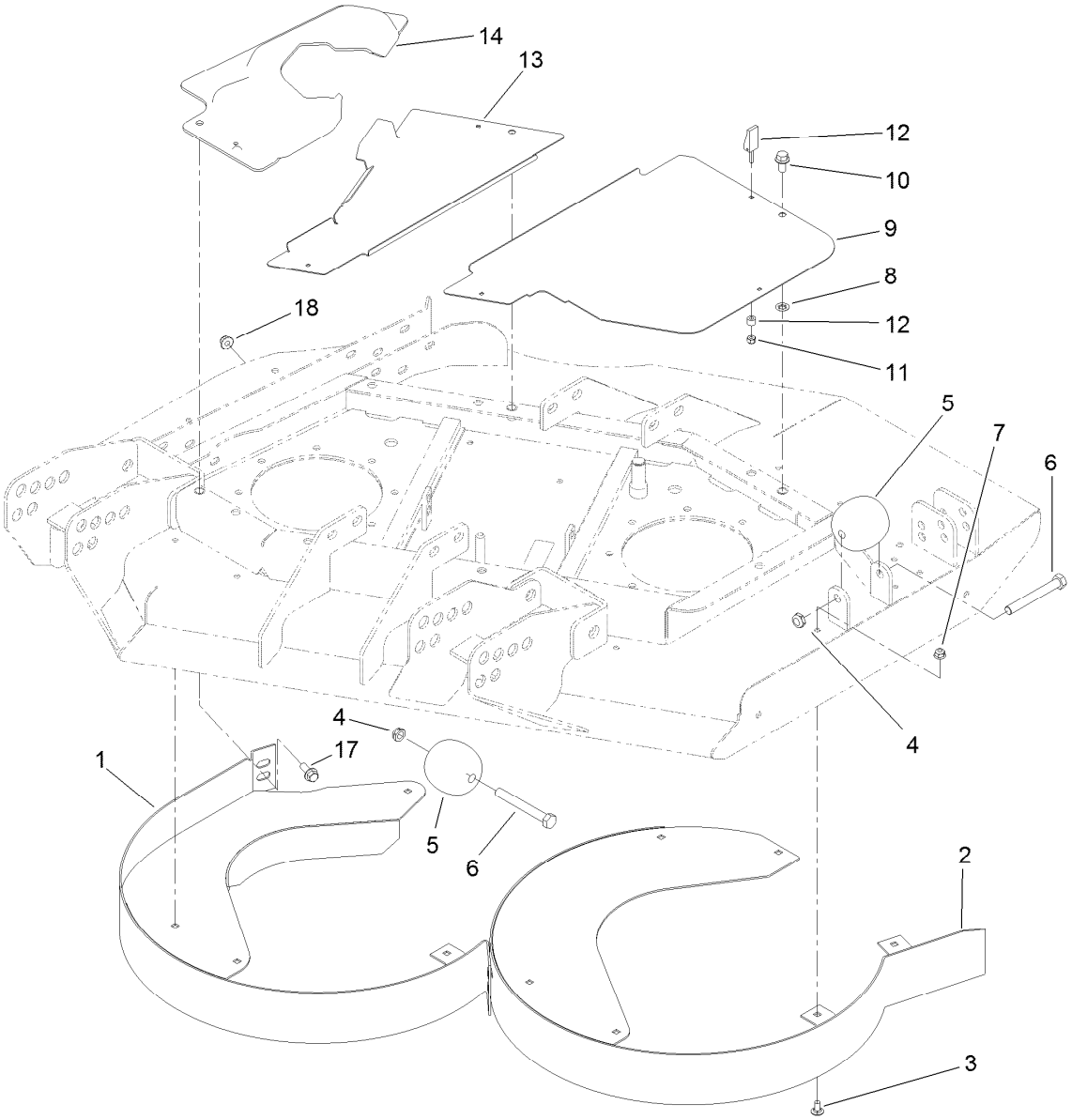

Right Deck Discharge Chamber and Cover Assembly

Ref.	Part Number	Qty.	Description
1	120-4131-01	1	Chamber-Outer
2	104-2204-01	1	Chamber-Inner
3	3230-18	11	Screw-CARR
4	3296-45	2	Nut-Hex
5	29-4820	2	Roller
6	325-17	2	Screw-HH
7	104-8300	11	Nut-HF, NI
8	107-3154	3	Nut-Push

Ref.	Part Number	Qty.	Description
9	100-5668-03	1	Plate-Cover, RH Side
10	3234-1	3	Screw-HHF
11	1-804254	7	Nut-Lock, HH
12	74-5950	7	Latch-Swell
13	100-5665-03	1	Plate-Cover, RH
14	100-5666	1	Cover-Motor, RH Deck
17	3234-42	1	Screw-HHF
18	104-8301	1	Nut-HF, NI

Left Deck Discharge Chamber and Cover Assembly

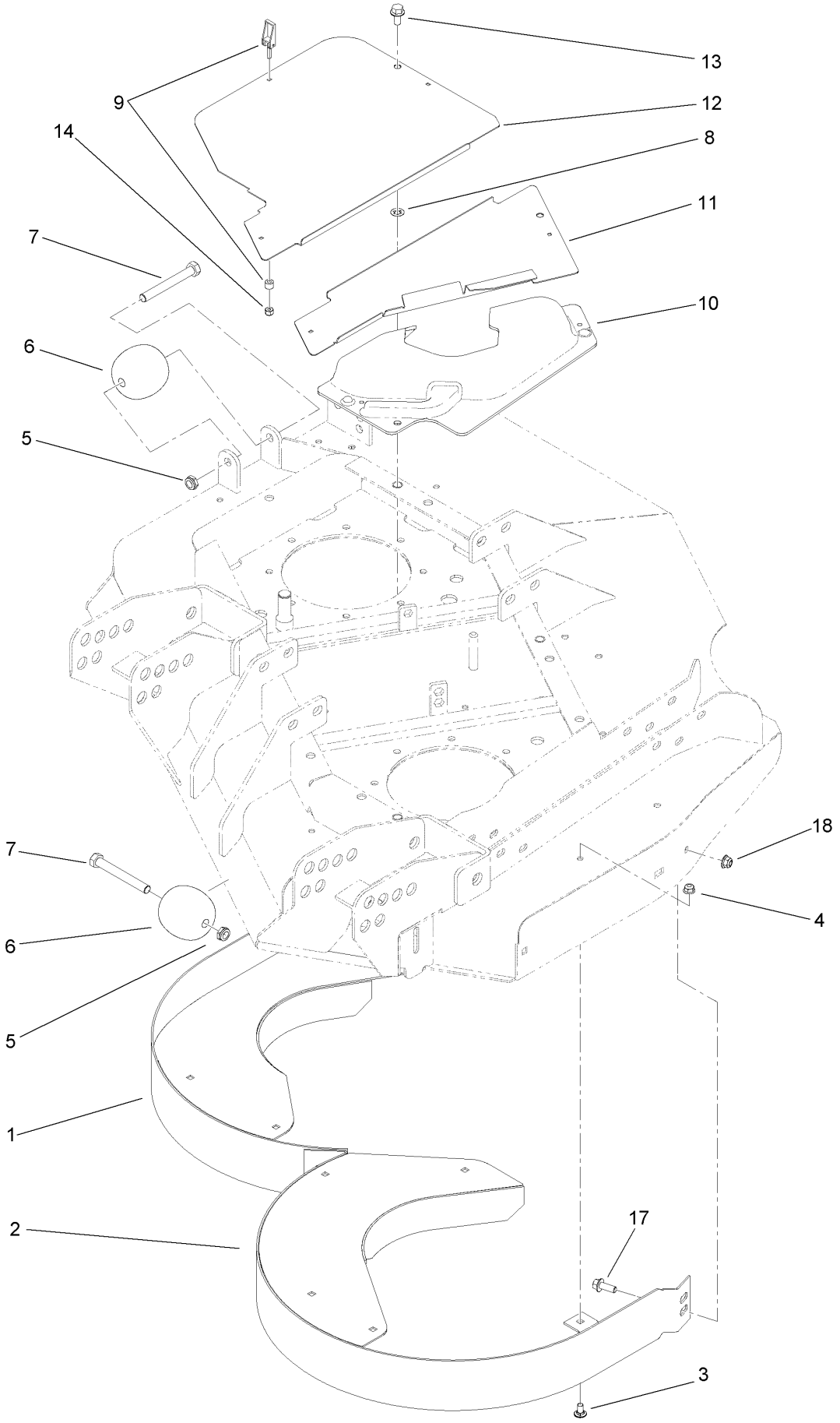

Left Deck Discharge Chamber and Cover Assembly (continued)

Ref.	Part Number	Qty.	Description
1	104-2205-01	1	Chamber-Inner
2	120-4132-01	1	Chamber-Outer
3	3230-18	9	Screw-CARR
4	104-8300	9	Nut-HF, NI
5	3296-45	2	Nut-Hex
6	29-4820	2	Roller
7	325-17	2	Screw-HH
8	107-3154	3	Nut-Push
9	74-5950	7	Latch-Swell
10	100-5669	1	Cover-Motor, LH Deck
11	100-5664-03	1	Plate-Cover, LH
12	100-5667-03	1	Plate-Cover, LH Side
13	3234-1	3	Screw-HHF
14	1-804254	7	Nut-Lock, HH
17	3234-42	1	Screw-HHF
18	104-8301	1	Nut-HF, NI

Left Deck Idler and Skid Assembly

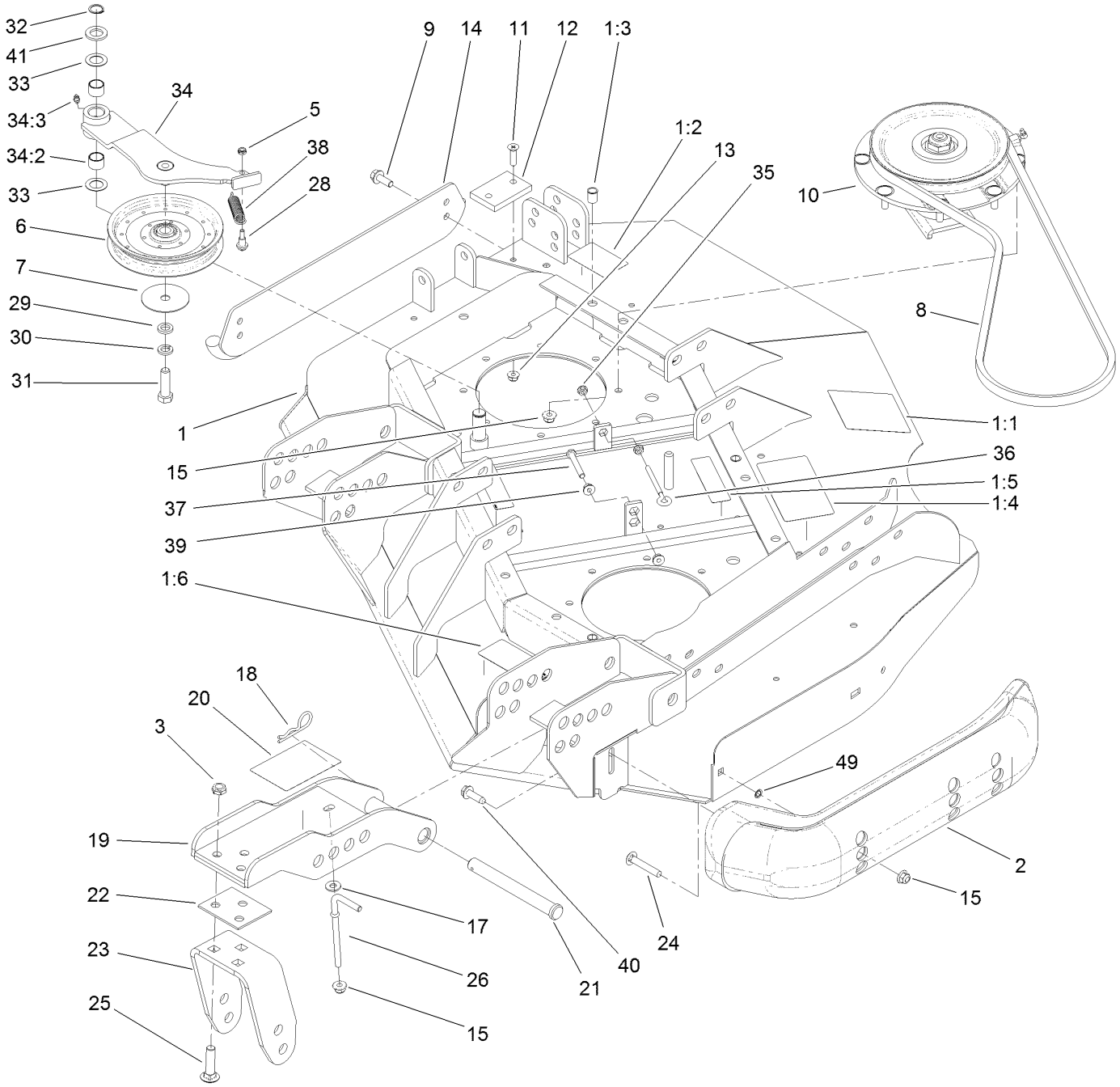

Left Deck Idler and Skid Assembly (continued)

Ref.	Part Number	Qty.	Description
1	120-4072	1	Left Deck ASM
1:1	120-6604	1	Decal-Danger
1:2	100-5693	1	Decal-Rear HOC, LH
1:3	32148-9	3	Nut-Clinch
1:4	100-5622	1	Decal-HOC
1:5	100-6578	3	Decal-Danger
1:6	93-7818	1	Decal-Torque, Blade Bolt
2	112-1479	1	Skid-Bumper, Deck
3	3296-45	6	Nut-Hex
5	3296-56	1	Nut-Lock, NI
6	110-9596	1	Pulley-Idler
7	100-3102	1	Washer-Flat
8	108-8076	1	V-Belt, Deck
9	3234-42	2	Screw-HHF
10	119-4776	1	Low-Driven Spindle ASM
11	32108-103	2	Screw-FH
12	69-9290	1	Pad-Bumper
13	104-8300	2	Nut-HF, NI
14	104-2250-01	1	Skid-Side
15	104-8301	18	Nut-HF, NI
17	3256-3	2	Washer-Flat
18	3290-343	4	Pin-Hair
19	104-7529-01	2	Bracket-Castor
20	104-3579	1	Decal-HOC
21	100-5569	4	Pin-Clevis
22	104-7524	8	Shim
23	121-1720-01	2	Bracket-Fork
24	3231-33	2	Screw-CARR
25	3233-4	6	Screw-CARR
26	106-2047	2	Rod-Tension
28	104-0858	1	Bolt-Shoulder
29	9202424	1	Spacer
30	3253-7	1	Washer-Lock
31	325-7	1	Screw-HH
32	32120-72	1	Ring-Snap
33	3-6498	2	Washer-Thrust
34	110-6128	1	Idler Arm ASM
34:2	256-76	2	Bushing
34:3	302-5	1	Fitting-Grease
35	32128-14	2	Nut-HF
36	68-0090	1	Screw-Adjusting
37	9114524	1	Bolt-TAP, HH
38	107938	1	Spring-Extension
39	32128-26	2	Nut-HF
40	9136144	1	Screw-HWHTF
41	70-1160	1	Washer
49	32151-72	2	Ring-Retaining

Frame Mount and Seal Assembly

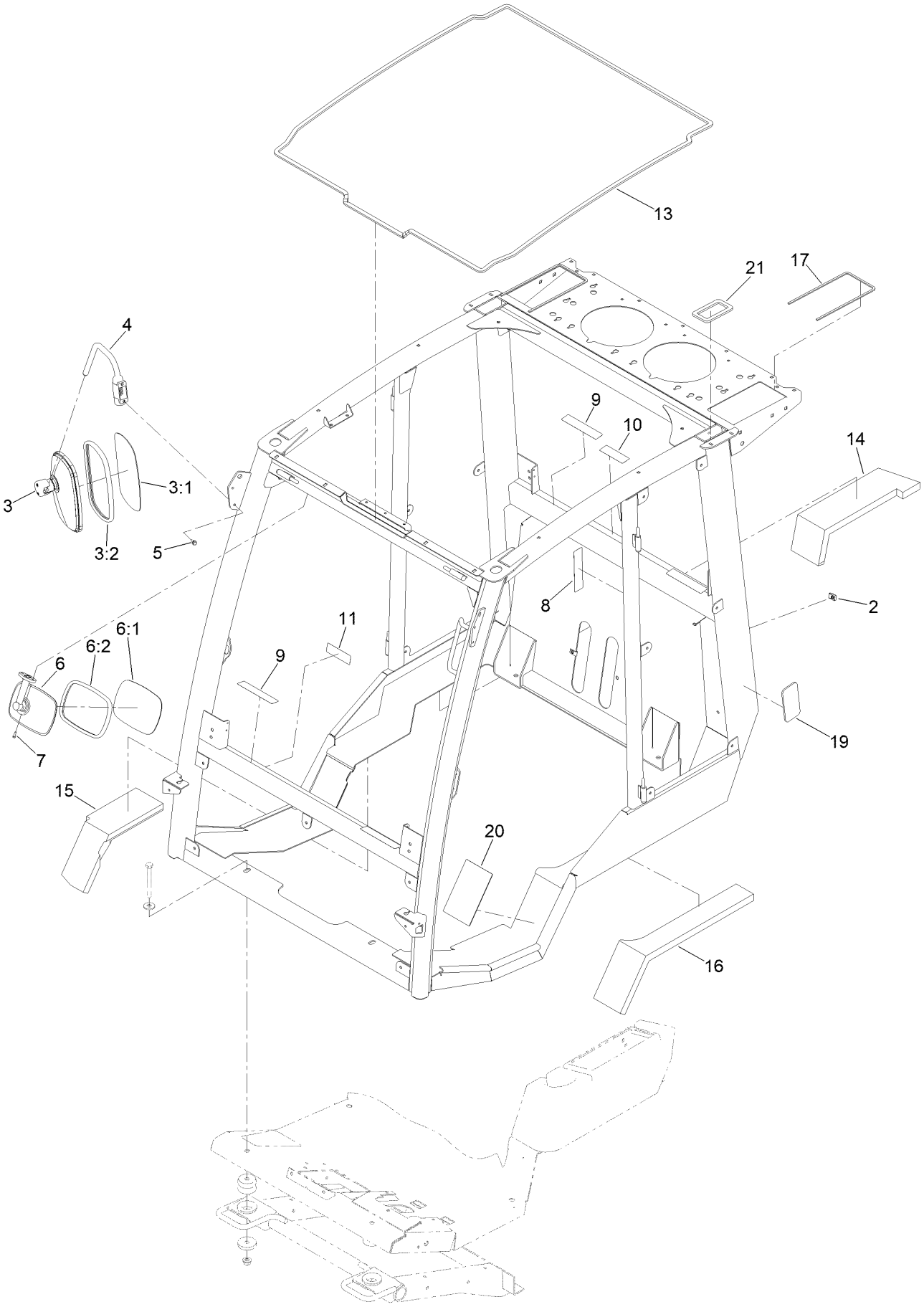

Frame Mount and Seal Assembly (continued)

Ref.	Part Number	Qty.	Description
2	94-2413	2	Nut-U
3	121-8341	2	Side Mirror ASM
3:1		1	Mirror-Glass ●
3:2		1	Gasket ●
4	121-8275	2	Arm-Mirror, Side
5	33103-016	4	Screw-HHF
6	121-8343	1	Interior Mirror ASM
6:1		1	Mirror ●
6:2		1	Gasket ●
7	32144-32	2	Screw-PPH
8	130-0594	1	Decal-Warning

Ref.	Part Number	Qty.	Description
9	130-0611	4	Decal-Window, Pin
10	130-5355	1	Decal-Window, Hood
11	130-5356	1	Decal-Traction Pedal
13	130-0586	1	Seal-Foam, Frame Roof
14	121-8545	1	Seal-Foam, RH-Upper
15	121-8546	1	Seal-Foam, RH
16	121-8508	1	Foam-Seal, LH
17	130-0587	2	Seal-Foam, Roof Air Filter
19	130-5923	2	Pad
20	130-5978	2	Patch-Tread
21	130-5855	2	Seal-Tube, Rear

● Not serviced separately

Headliner Assembly

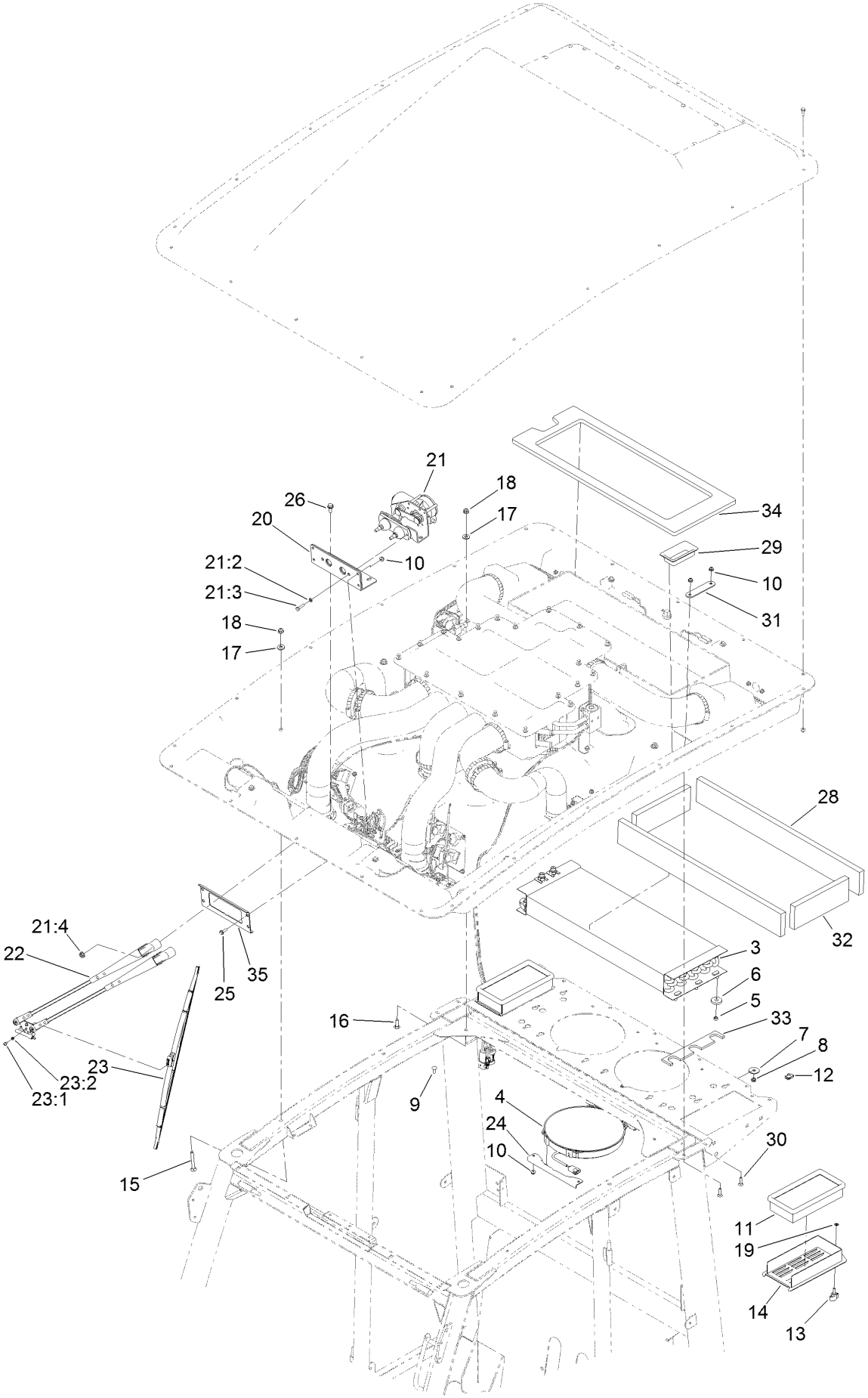

Headliner Assembly (continued)

Ref.	Part Number	Qty.	Description
3	121-8447	1	Core-Condenser
4	121-8459	2	Fan-Condenser
5	106-8489	6	Bushing-Sleeve
6	125-9982	6	Bushing-Flange
7	3256-57	6	Washer-Flat
8	3296-47	6	Nut-Lock,NI
9	1-807512	8	Bolt-CARR
10	104-7201	16	Nut-HF, NI
11	121-8457	2	Filter-Air
12	107069	2	Clip
13	98-8332	2	Knob
14	125-9825-03	2	Cover-Air, Fresh
15	3230-9	4	Screw-CARR
16	3230-22	13	Screw-CARR
17	3256-3	17	Washer-Flat
18	104-8300	17	Nut-HF, NI
19	106-8737	2	Nut-Retainer
20	130-5871	1	Bracket-Wiper
21	125-7452	1	Wiper Motor ASM

Ref.	Part Number	Qty.	Description
21:2	3253-3	1	Washer-Lock
21:3	33113-025	1	Screw-HH
21:4	112-2844	2	Nut-HF
22	125-7453	1	Arm-Wiper
23	125-7454	1	Blade-Wiper
23:1	47-2830	2	Screw
23:2	43-5920	2	Washer-Lock, Spring
24	125-9621-03	4	Bracket-Mount, Fan
25	32105-15	4	Screw-HWH
26	32144-11	2	Screw-HWH
28	130-5649	2	Seal-Foam, Long
29	130-5661	2	Tube-Sleeve
30	3229-30	4	Screw-CARR
31	130-5854	2	Brace-Seal
32	130-5650	2	Seal-Foam, Short
33	130-5931	2	Seal-Condenser
34	130-5647	1	Gasket-Foam, Condenser
35	130-6068-03	1	Plate-Washer, Wiper Motor

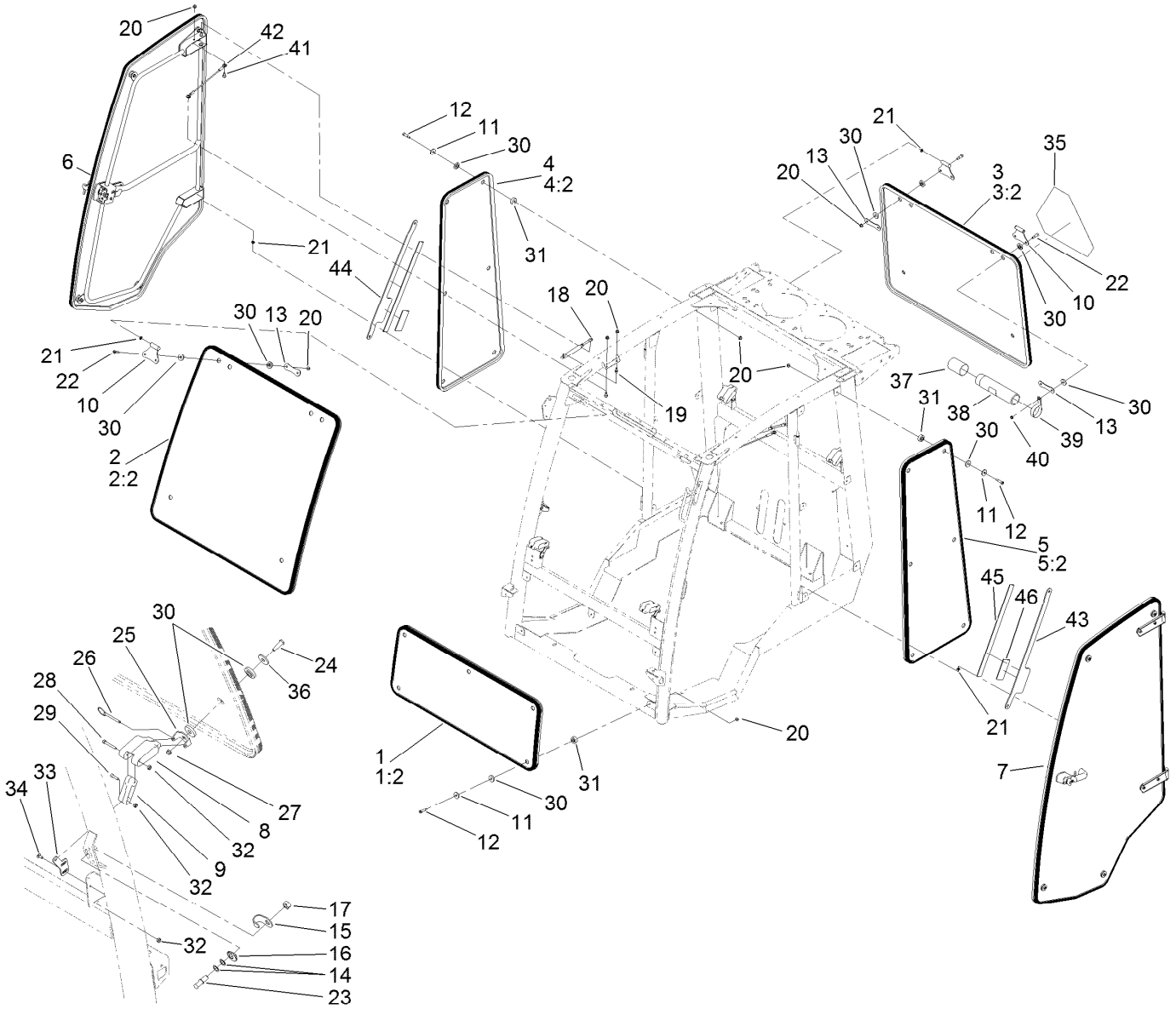

Window, Door and Striker Assembly

Ref.	Part Number	Qty.	Description
1	130-5681	1	Lower Front Window ASM
1:2	121-8211	1	Trim-Window, Front
2	130-5680	1	Upper Front Window ASM
2:2	121-8212	1	Seal-Trim
3	130-5682	1	Rear Window ASM
3:2	130-0637	1	Seal-Trim
4	130-5676	1	RH-Side Window ASM
4:2	121-8215	1	Seal-Trim
5	130-5677	1	LH-Side Window ASM
5:2	121-8215	1	Seal-Trim
6		1	RH Door ASM ●
7		1	LH Door ASM ●
8	125-9792	4	Handle-Window
9	125-9793	4	Link-Window
10	121-8535-03	4	Hinge-Window
11	130-5815	13	Washer-Backup
12	125-9521	17	Screw-Shldr HSH
13	127-9933-03	4	*obs* Plate-Backer

Ref.	Part Number	Qty.	Description
14	73-0040	2	Washer-Thrust
15	121-8393	2	Guard-Striker
16	125-9992	2	Adjuster-Stud
17	106-0327	2	Nut-Hex
18	130-6083	2	Spring-Gas, Door
19	98-3104	2	Stud-Ball
20	104-8300	29	Nut-HF, NI
21	121-8441	8	Washer-Spacer
22	125-9520	8	Screw-Shoulder, HSH
23	125-9993	2	Striker-Stud
24	119-9812	4	Bolt-Shoulder
25	125-9987	4	Mount-Latch
26	127-9850	4	Pin-Release, Quick
27	104-7201	4	Nut-HF, NI
28	3274-59	4	Screw-HSH
29	3274-14	4	Screw-HSH
30	125-9982	41	Bushing-Flange
31	125-9537	17	Bushing-Flange

● Not serviced separately

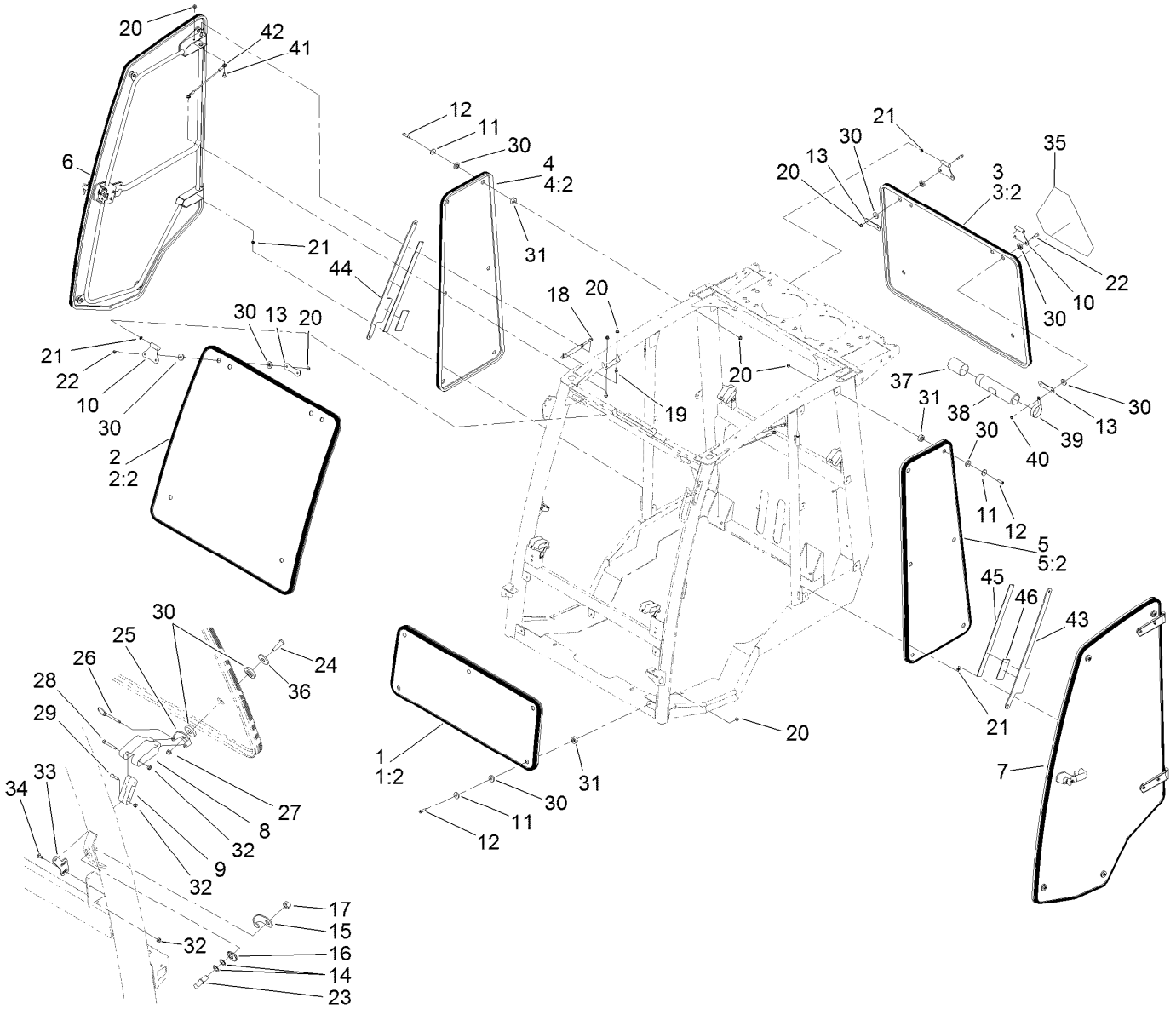

Window, Door and Striker Assembly (continued)

Ref.	Part Number	Qty.	Description
32	120-9681	16	Nut-Lock, NI
33	130-0590	4	Mount-Tab
34	1-807513	8	Bolt-CARR
35	120-0250	1	Decal-Warning
36	125-9676	4	Washer-Backup
37	104-7048	1	Cap-Housing
38	104-7050	1	Tube-Manual
39	2412-133	2	Clamp-R

Ref.	Part Number	Qty.	Description
40	3296-47	2	Nut-Lock,NI
41	120-9471	4	Bolt-Shoulder
42	130-5726	2	Lanyard
43	130-6095-03	1	Strap-Support, Left
44	130-6091-03	1	Strap-Support
45	130-6096	2	Strap-Foam, 19.5 Inch
46	130-6097	2	Strap-Foam, 4.25 Inch

● Not serviced separately

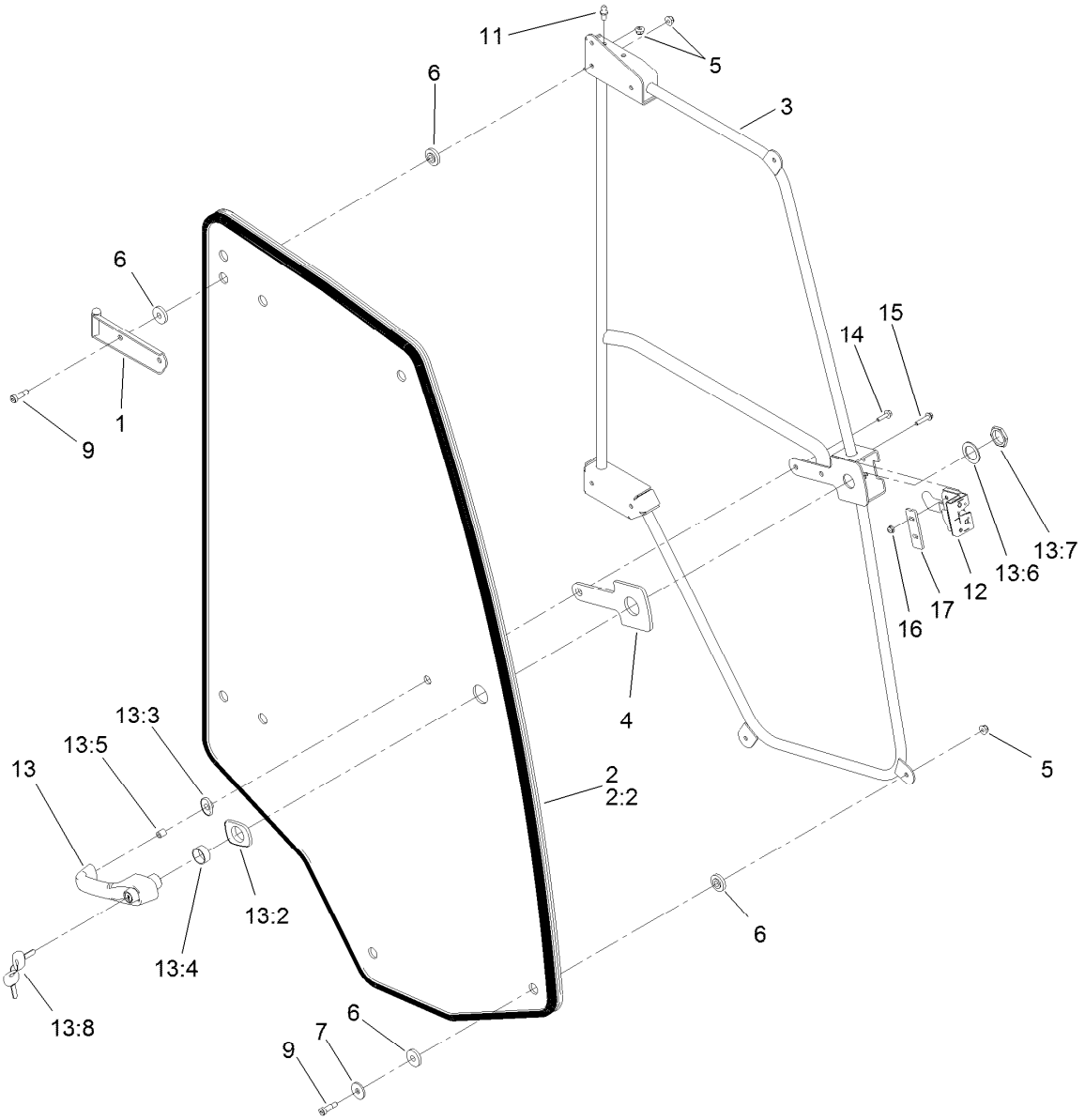

RH Door Assembly

Ref.	Part Number	Qty.	Description
1	125-9618-03	2	Hinge-Door, RH
2	130-5678	1	RH Door ASM
2:2	125-9799	1	Trim-Door
3	121-8570-03	1	Frame-Door, RH
4	121-8331	1	Gasket-Handle
5	104-8300	9	Nut-HF, NI
6	125-9982	16	Bushing-Flange
7	125-9676	4	Washer-Backup
9	125-9520	8	Screw-Shoulder, HSH
11	98-3104	1	Stud-Ball
12	121-8390	1	Latch-RH
13	121-8630	1	Handle ASM

Ref.	Part Number	Qty.	Description
13:2	121-8628	1	Cylinder-Mounting, Key
13:3	121-8322	1	Grommet-Mounting, Large
13:4	121-8327	1	Washer
13:5	121-8328	1	Nut
13:6	121-8627	1	Cylinder-Mounting, End
13:7	121-8323	1	Grommet-Mounting, Small
13:8	125-9531	1	Key-Set
14	33103-025	1	Screw-HHF
15	3234-21	2	Screw-HHF
16	104-7201	2	Nut-HF, NI
17	121-8395	1	Plate-Support, Latch

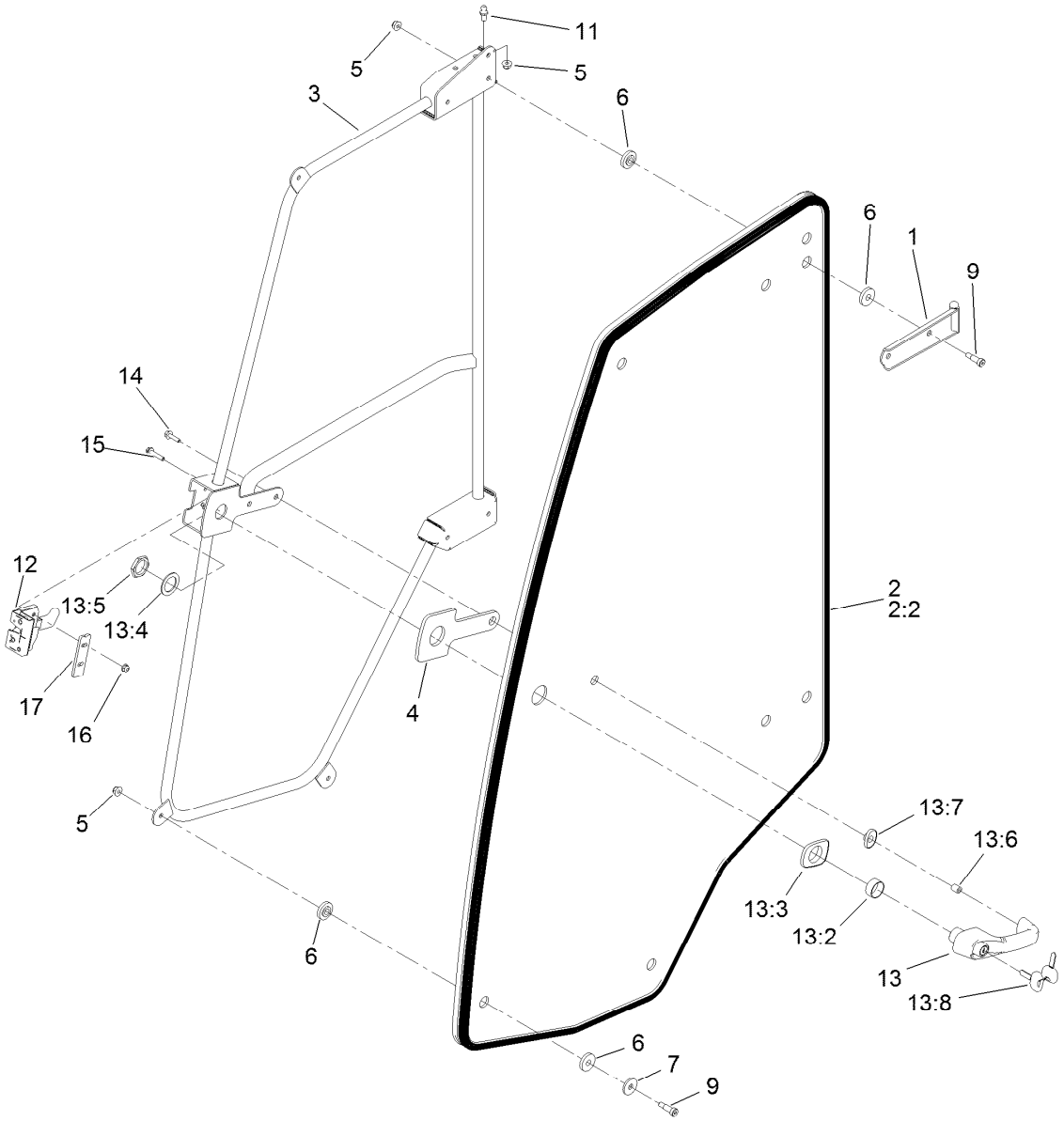

LH Door Assembly

Ref.	Part Number	Qty.	Description
1	125-9619-03	2	Hinge-Door, LH
2	130-5679	1	LH Door ASM
2:2	121-8216	1	Trim-Window
3	121-8571-03	1	Frame-Door, LH
4	121-8331	1	Gasket-Handle
5	104-8300	9	Nut-HF, NI
6	125-9982	16	Bushing-Flange
7	125-9676	4	Washer-Backup
9	125-9520	8	Screw-Shoulder, HSH
11	98-3104	1	Stud-Ball
12	121-8391	1	Latch-LH
13	121-8630	1	Handle ASM

Ref.	Part Number	Qty.	Description
13:2	121-8628	1	Cylinder-Mounting, Key
13:3	121-8322	1	Grommet-Mounting, Large
13:4	121-8327	1	Washer
13:5	121-8328	1	Nut
13:6	121-8627	1	Cylinder-Mounting, End
13:7	121-8323	1	Grommet-Mounting, Small
13:8	125-9531	1	Key-Set
14	33103-025	1	Screw-HHF
15	3234-21	2	Screw-HHF
16	104-7201	2	Nut-HF, NI
17	121-8395	1	Plate-Support, Latch

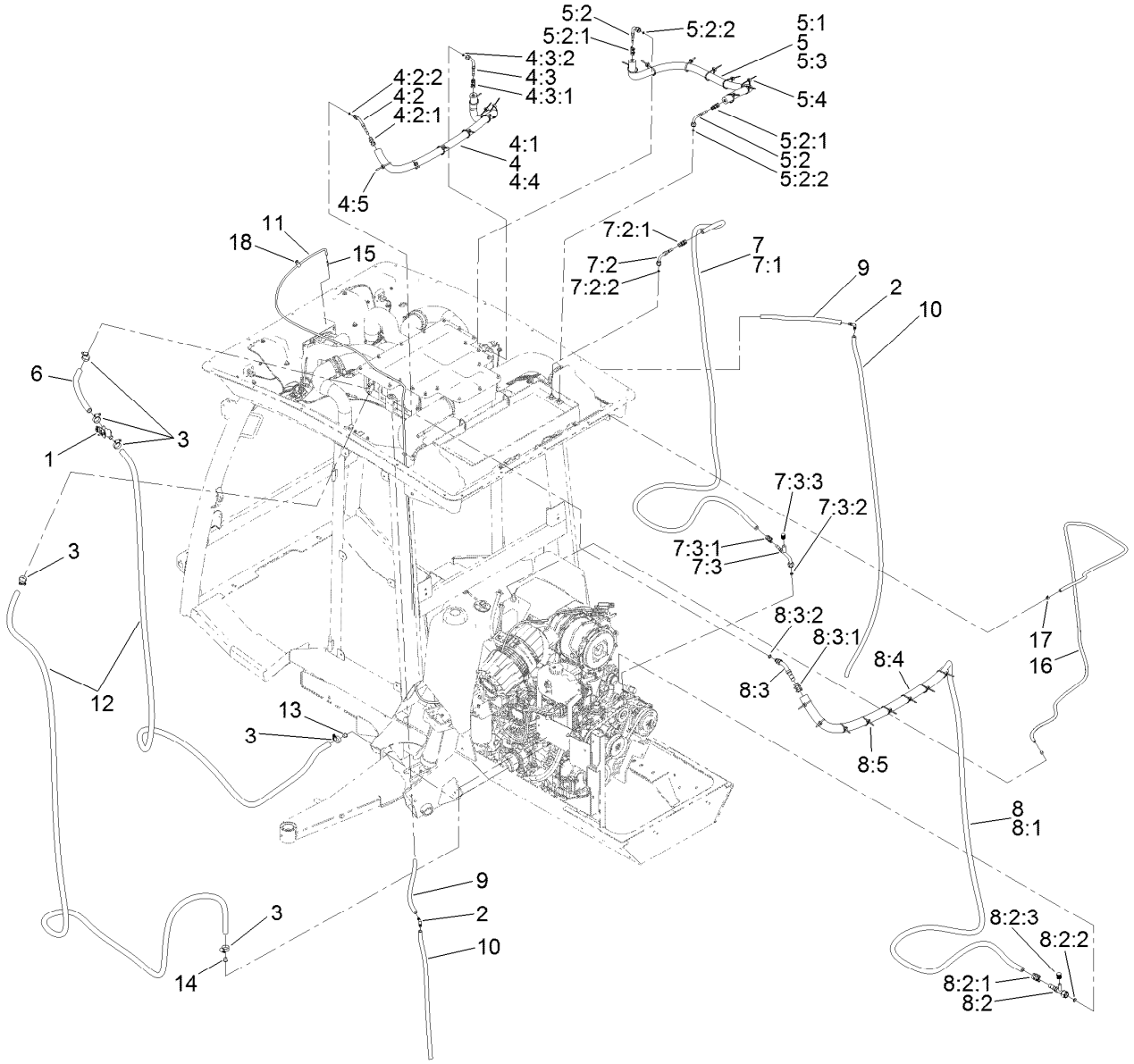

Engine Hose Routing Assembly

Ref.	Part Number	Qty.	Description
1	120-4947	1	Valve-Heater
2	130-0578	2	Fitting-Barb, 90 DEG
3	2412-129	6	Clamp-Hose
4	125-9702	1	Hose ASM
4:1	130-0417	1	Hose
4:2	130-5753	1	Fitting-45 DEG
4:2:1	130-5772	1	Fitting Kit
4:2:2	117-2778	1	O-Ring
4:3	130-5751	1	Fitting-Female, 90 DEG
4:3:1	130-5772	1	Fitting Kit
4:3:2	117-2778	1	O-Ring
4:4	130-5958	1	Cover-Foam
4:5	3290-378	8	Tie-Cable
5	125-9703	1	Hose ASM
5:1	130-0417	1	Hose
5:2	130-5751	2	Fitting-Female, 90 DEG
5:2:1	130-5772	1	Fitting Kit
5:2:2	117-2778	1	O-Ring
5:3	130-5958	1	Cover-Foam
5:4	3290-378	8	Tie-Cable
6	125-9706	1	Hose-Heater

Ref.	Part Number	Qty.	Description
7	125-9861	1	Hose ASM
7:1	130-0418	1	Hose
7:2	130-5752	1	Fitting-Female, 90 DEG
7:2:1	130-5773	1	Fitting Kit
7:2:2	117-2778	1	O-Ring
7:3	130-5758	1	Fitting-Female, 90 DEG
7:3:1	130-5773	1	Fitting Kit
7:3:2	117-2779	1	O-Ring
7:3:3	117-2783	1	Cap-Side, High
8	125-9862	1	Hose ASM
8:1	130-0419	1	Hose
8:2	130-5755	1	Fitting-Female, Straight
8:2:1	130-5775	1	Fitting Kit
8:2:2	117-2780	1	O-Ring
8:2:3	117-2784	1	Cap-Side, Low
8:3	130-5754	1	Fitting-Male, 45 DEG
8:3:1	130-5775	1	Fitting Kit
8:3:2	117-2780	1	O-Ring
8:4	130-5959	1	Cover-Foam
8:5	3290-378	8	Tie-Cable
9	125-9865	2	Hose-Drain

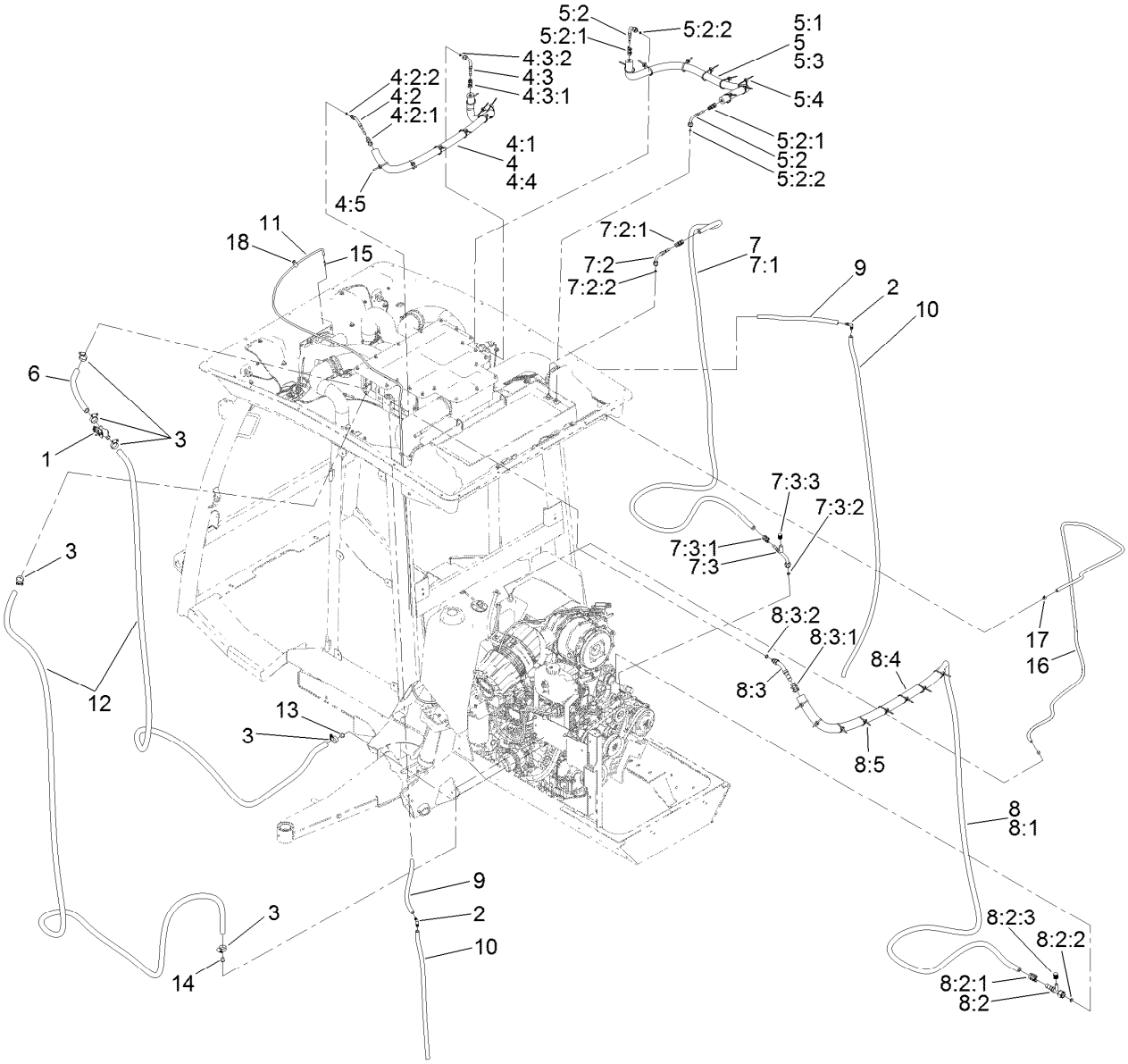

Engine Hose Routing Assembly (continued)

Ref.	Part Number	Qty.	Description
10	125-9866	2	Hose-Drain
11	127-9901	1	Hose-Washer Fluid
12	125-9864	2	Hose-Heater
13	130-0581	1	Plug-Tapered (Red)
14	130-0582	1	Plug-Tapered (Green)
15	127-9905	1	Fitting-Hose, Barb
16	130-5813	1	Hose-Fuel
17	2412-98	1	Clamp-Hose
18	2412-73	1	Clamp-R

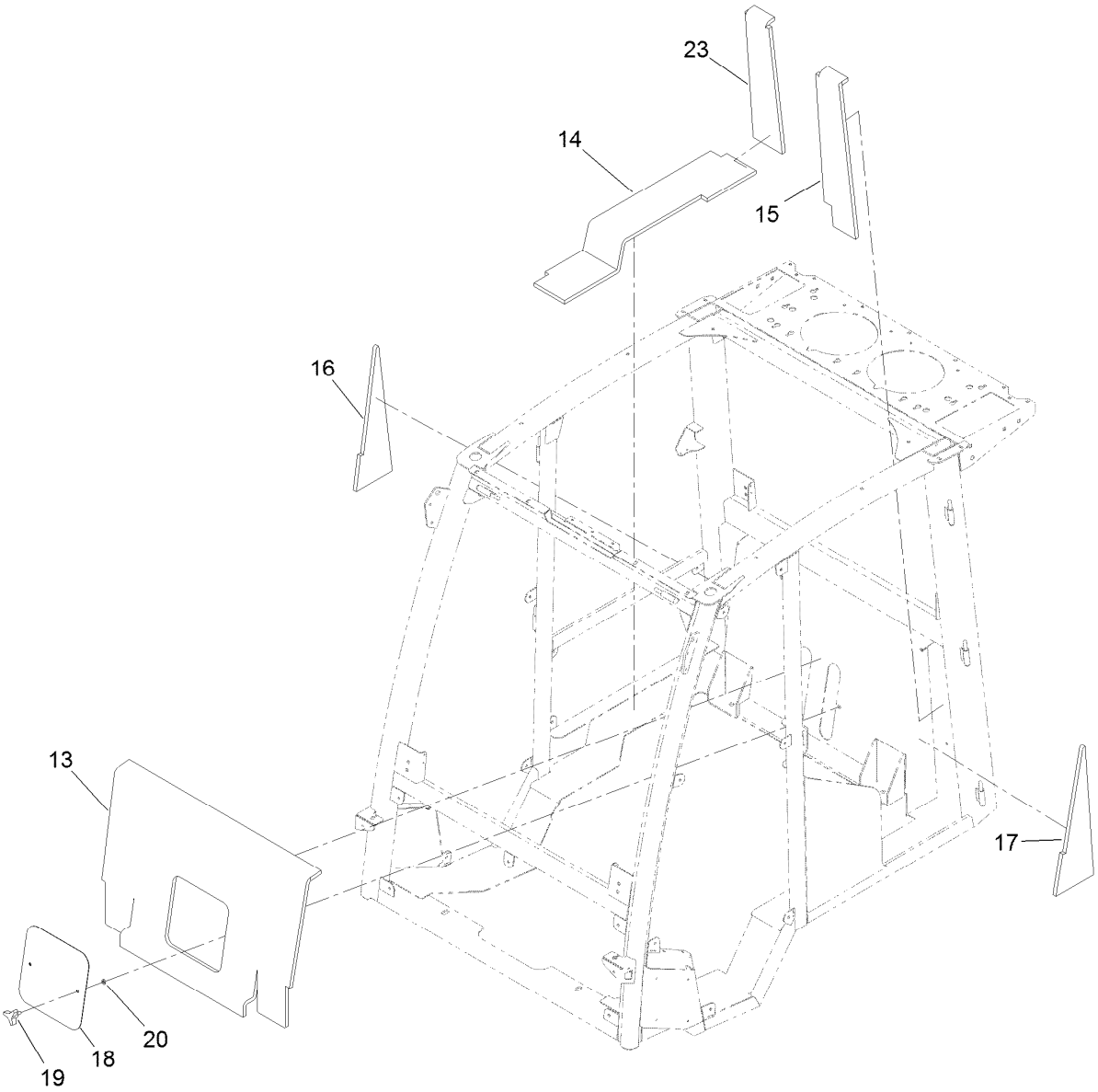

Interior Foam Assembly

Ref.	Part Number	Qty.	Description
13	130-0564	1	Foam-Upholstery, Rear
14	130-5837	1	Foam-Interior, RH-Lower
15	130-0563	1	Foam-Upholstery, Rear-LH
16	130-0561	1	Foam-Upholstery, Side (RH)
17	130-0570	1	Foam-Upholstery, Rear (LH)
18	121-8161-03	1	Plate-Panel, Acess
19	700806	2	Knob
20	109-5667	2	Nut-Push
23	130-5838	1	Foam-Interior, RH (Upper)

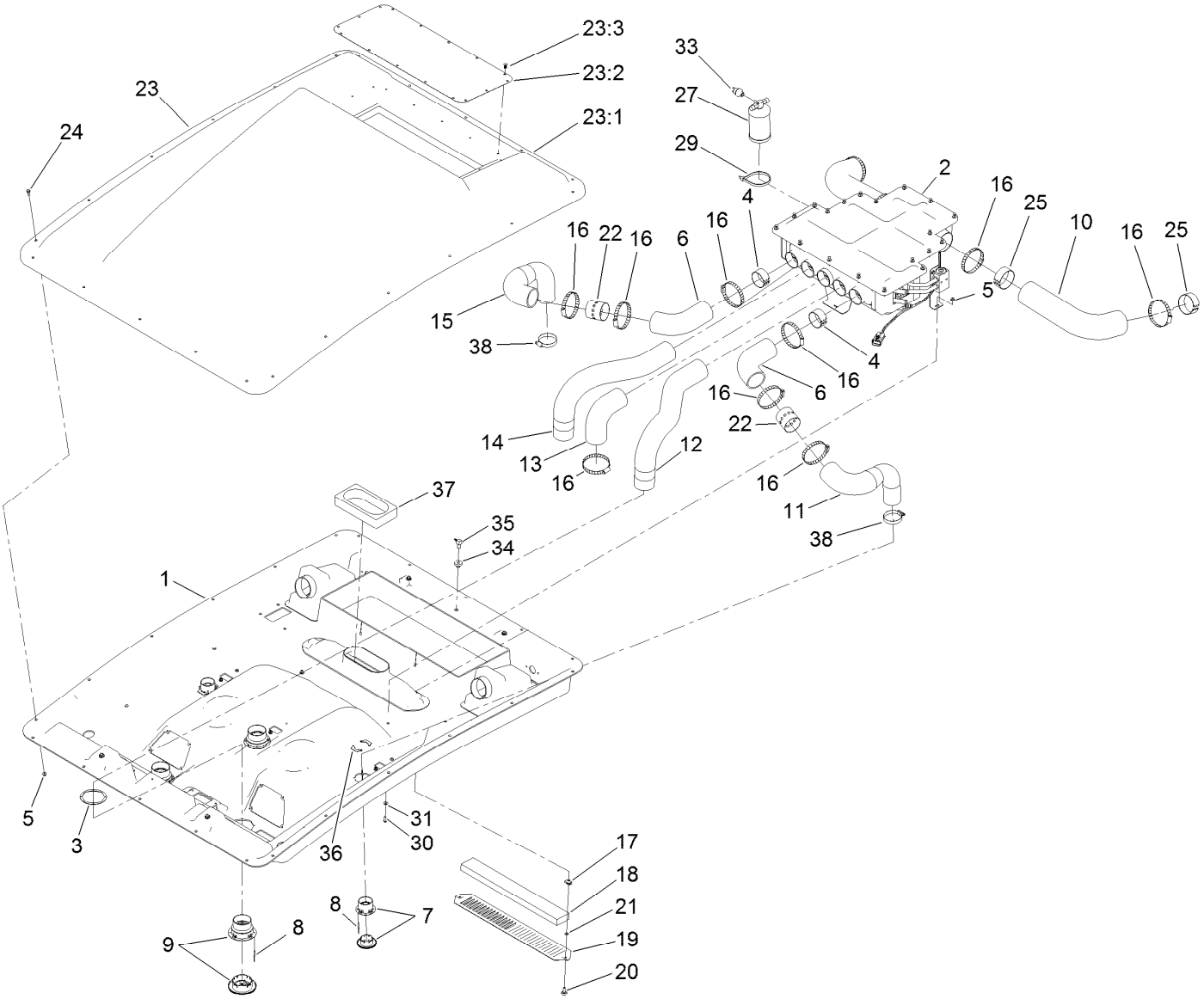

Mixing Box and Vent Hose Assembly

Ref.	Part Number	Qty.	Description
1	121-8470	1	Headliner
2	121-8495	1	Box-Mixing, Heater A/C
3	130-0558	3	Backplate-Rivet
4	130-5938	2	Tube-Support
5	104-7201	24	Nut-HF, NI
6	130-5860	2	Hose-Vent
7	130-0455	2	Louver-Round, Snap-In
8	125-7503	20	Rivet-Pop
9	130-0465	3	Louver-Round, Snap-In (4 Inch)
10	121-8473	2	Hose-Intake, Fresh Air
11	130-5861	1	Hose-Vent, Outer (LH)
12	121-8477	1	Hose-Vent, Defrost (LH)
13	130-0437	1	Hose-Vent, Center
14	121-8478	1	Hose-Vent, Defrost (RH)
15	130-5862	1	Hose-Vent, Outer (RH)
16	2412-110	11	Clamp-Band/Screw
17	107069	2	Clip
18	125-9532	1	Filter-Cab, Inside
19	125-9604-03	1	Plate-Cover, Recirculation

Ref.	Part Number	Qty.	Description
20	125-7438	2	Knob-Screw, Thumb
21	106-8737	2	Nut-Retainer
22	130-5927	2	Adapter-Bleed
23	130-0459	1	Roof ASM
23:1	125-9607	1	Roof
23:2	121-8472-03	1	Screen-Roof
23:3	114-4899	16	Rivet-Push
24	119-4161	22	Bolt-Shoulder
25	130-5939	4	Tube-Support
27	119-4502	1	Drier-Receiver
29	3334-945	2	Tie-Cable
30	3274-69	2	Screw-HSBH
31	3256-1	2	Washer-Flat
33	119-4501	1	Switch-Function, Dual
34	46-6560	1	Bushing
35	104-5228	1	Fitting-Elbow, 90 DEG
36	130-0445	4	Backplate-Rivet
37	130-0444	1	Foam-Inlet, Airbox
38	2412-130	2	Clamp-Hose

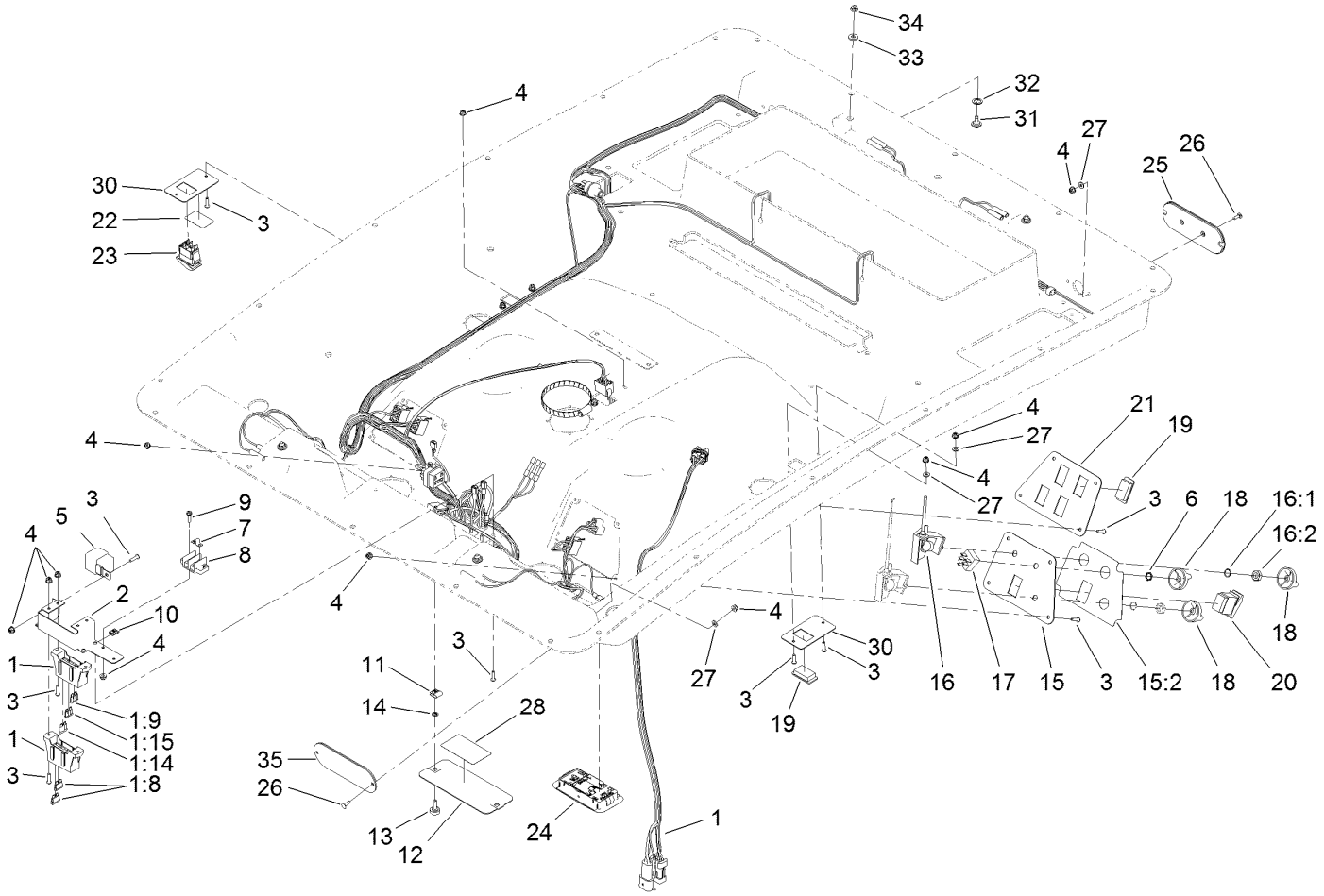

Headliner Wire Harness and Control Assembly

Ref.	Part Number	Qty.	Description
1	119-4387	1	Harness-Wire, Headliner
1:8	109355	2	Fuse-Blade, 15 Amp
1:9	109103	1	Fuse-Blade, 30 Amp
1:14	109101	1	Fuse-Blade, 20 Amp
1:15	109102	1	Fuse-Blade, 25 Amp
2	125-9606-03	1	Bracket-Fuse Block
3	104-2408	23	Screw-HSBH
4	120-4578	29	Nut-HF
5	99-7430	1	Relay-Mini
6	130-0588	1	Nut-Switch
7	42863	1	Strip-Jumper
8	42862	1	Block-Terminal, Ground
9	32105-13	2	Screw-HWH
10	107-1013	4	Nut-Speed
11	609900	2	Nut-Speed
12	125-9603-03	1	Plate-Cover, Fuse
13	125-7438	2	Knob-Screw, Thumb
14	106-8737	2	Nut-Retainer
15	121-8481	1	Panel-Air/Heat
15:2	121-8378	1	Decal, Air/Heat
16	125-9677	1	Control-Rotary, Linear

Ref.	Part Number	Qty.	Description
16:1	3254-20	1	Washer-Lock, Int
16:2	3220-4	1	Nut-Jam
17	122-0150	1	Switch, Rotary
18	125-9510	3	Knob-Control
19	99-7420	6	Plug-Hole
20	95-8999	1	Switch-Rocker, On-None-On
21	125-9691-03	1	Panel-Switch, Lights
22	125-9688	1	Decal-Washer
23	119-8355	1	Switch-Rocker
24	125-7437	1	Light-Dome
25	130-5867	2	Cover-Light, Rear
26	3229-34	8	Screw-CARR
27	3256-14	13	Washer-Flat
28	130-0458	1	Decal-Panel, Fuse
30	130-0436-03	3	Panel-Switch
31	92-9698	4	Screw-Shoulder
32	94-8196	4	Washer-Nylon
33	3256-2	4	Washer-Flat
34	104-7201	4	Nut-HF, NI
35	130-5868	2	Cover-Light, Front

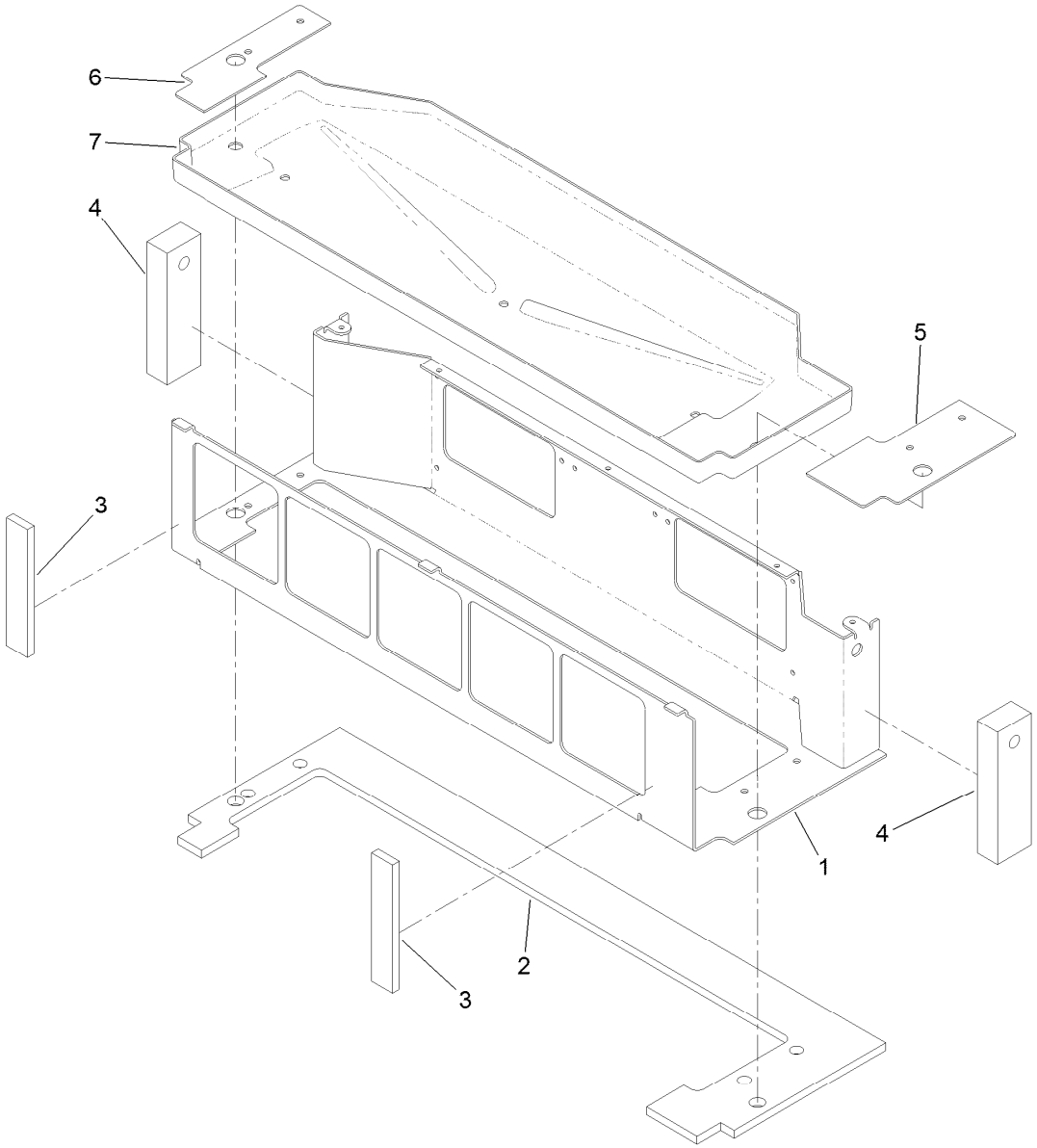

Mixing Box Mounting Bracket and Water Tray Assembly

Ref.	*Part Number*	*Qty.*	*Description*
1	130-5655-03	1	Bracket-Mount
2	130-5659	1	Seal-Foam
3	130-5808	2	Seal-Foam, Front
4	130-0602	2	Seal-End
5	130-5653	1	Gasket-Mount, LH Bracket
6	130-5654	1	Gasket-Mount, RH Bracket
7	130-5660	1	Tray-Water

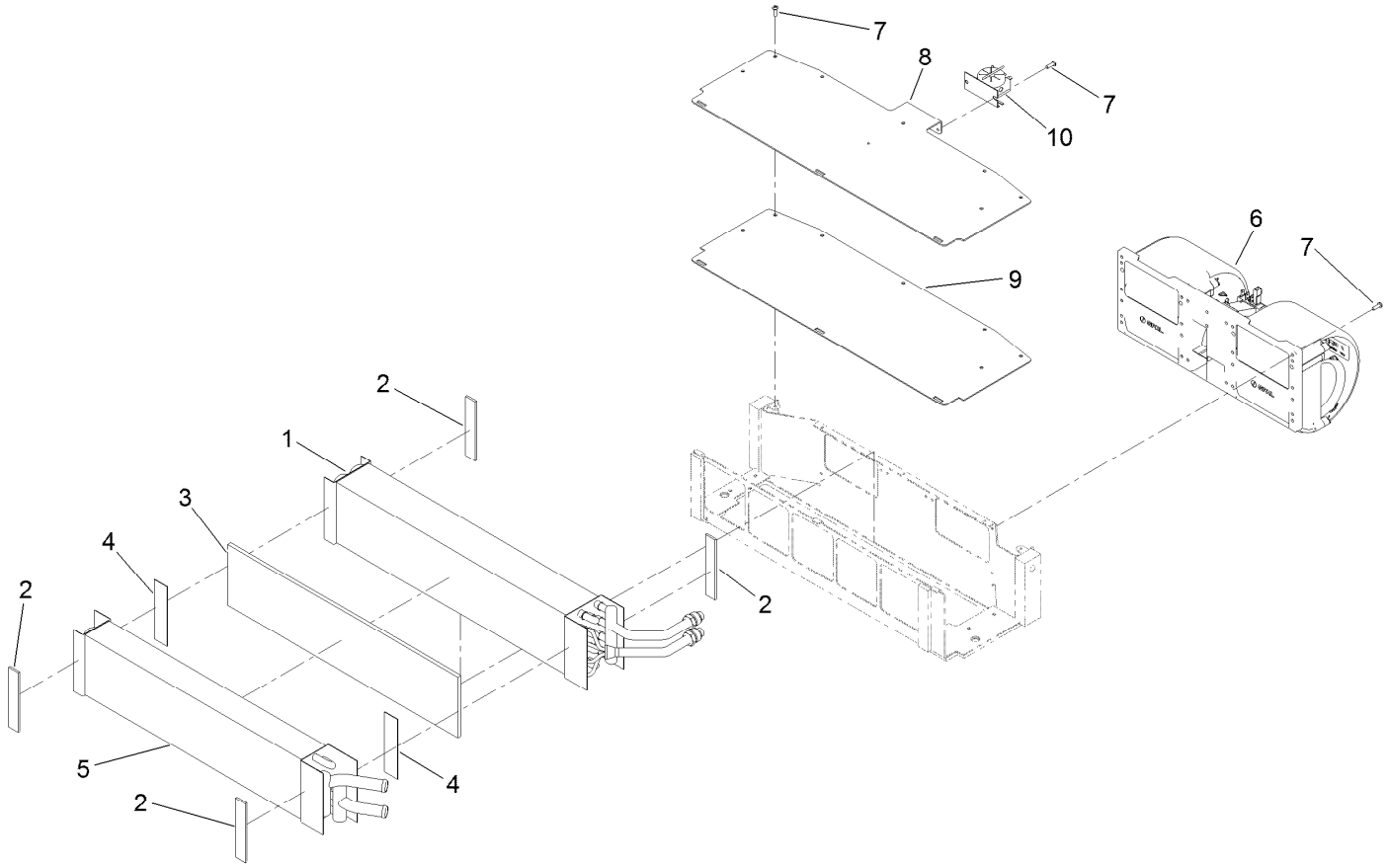

Blower Fan and Evaporator Core Assembly

Ref.	*Part Number*	*Qty.*	*Description*
1	130-5392	1	Core-Evaporator
2	130-5658	4	Gasket-Coil
3	130-5807	1	Foam
4	130-5806	2	Tape, Double-Sided
5	127-9915	1	Core-Heater
6	121-8451	1	Fan-Blower
7	363-8245	13	Screw-TAP
8	130-5656-03	1	Cover, Bracket-Mount
9	130-5652	1	Gasket-Mount, Cover Bracket
10	121-8385	1	Thermostat-Switch, Freeze

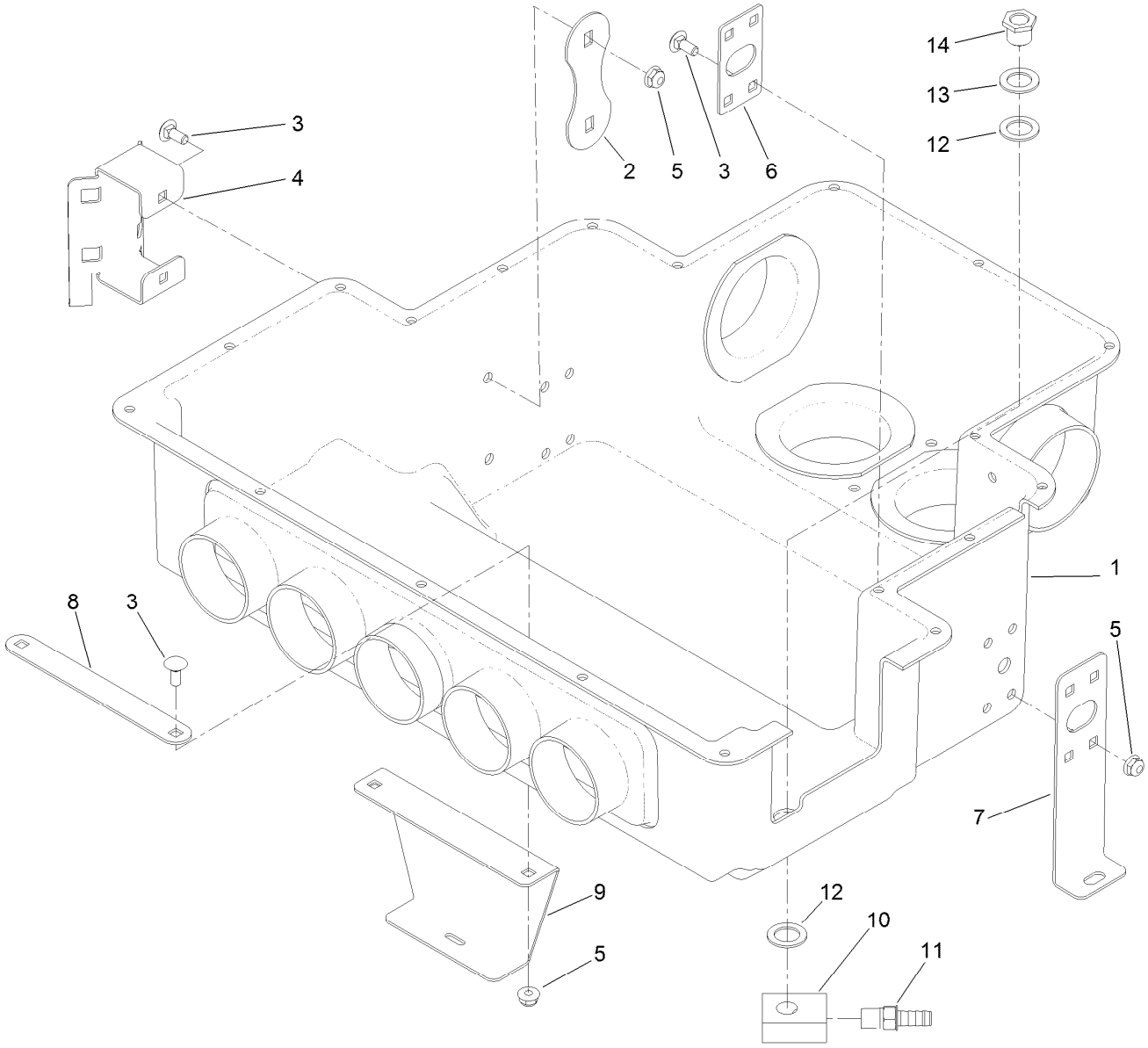

Heat/Air Conditioner Housing Assembly

Ref.	*Part Number*	*Qty.*	*Description*
1	130-5830	1	Housing-Heat/AC
2	121-8491	1	Plate-Support
3	3229-11	12	Screw-CARR
4	121-8490	1	Bracket-Mount, Drier
5	104-7201	12	Nut-HF, NI
6	130-5834	2	Bracket-Support
7	130-5821	2	Bracket-Airbox, Side
8	125-7504	1	Plate-Backer, Center
9	130-0554	1	Bracket-Airbox, Center
10	130-5601	2	Drain-Lower
11	108-0342	2	Fitting-Straight
12	121-6840	4	Washer-Rubber
13	107-3041	2	Washer-Flat
14	130-0293	2	Drain-Upper

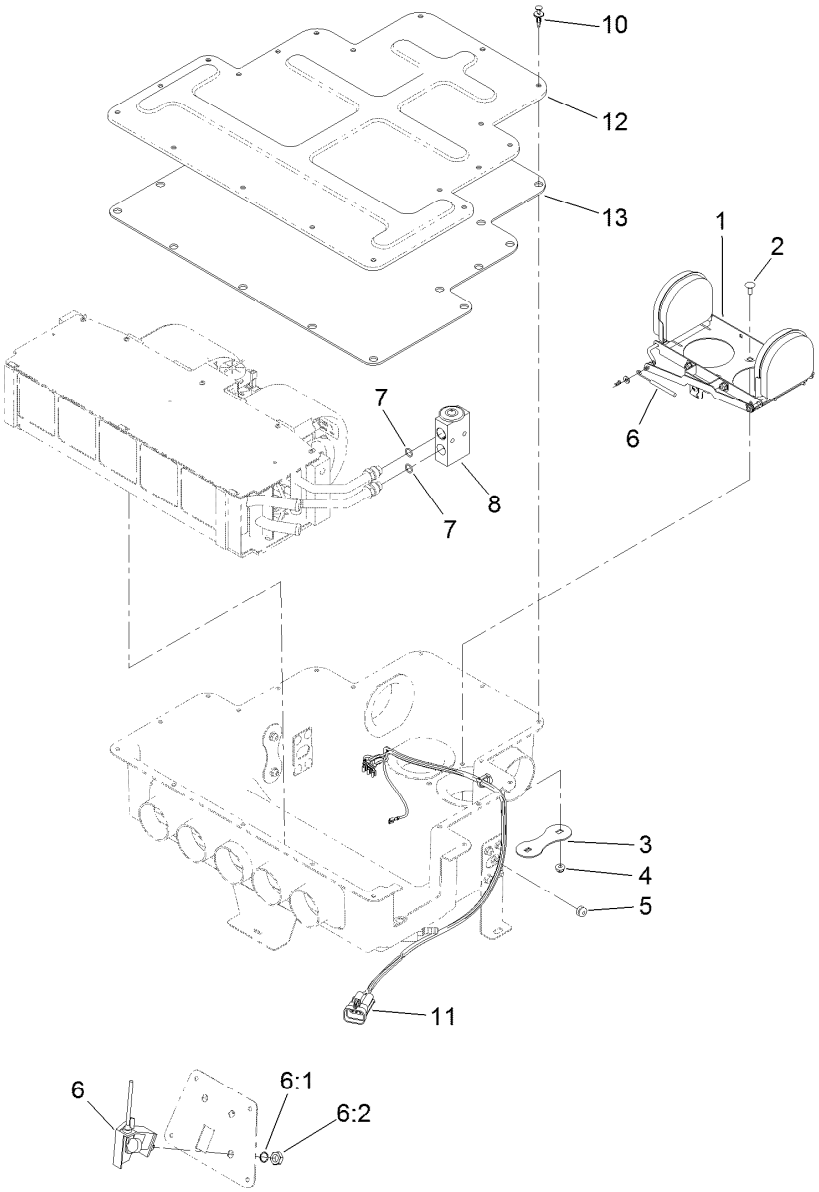

Air Diverter and Expansion Valve Assembly

Ref.	Part Number	Qty.	Description
1	121-8369	1	Air Diverter ASM
2	3229-11	2	Screw-CARR
3	121-8491	1	Plate-Support
4	104-7201	2	Nut-HF, NI
5	125-7528	1	Grommet-Cable
6	125-9678	1	Control-Rotary, Linear
6:1	3254-20	1	Washer-Lock, Int
6:2	3220-4	1	Nut-Jam
7	125-9524	2	O-Ring
8	121-8384	1	Valve-Expansion
10	125-9622	19	Rivet-Blind
11	122-0153	1	Harness-Wire, Heat/AC Blower
12	121-8449	1	Housing-Ventilation, Upper
13	130-5614	1	Insulation-Cover

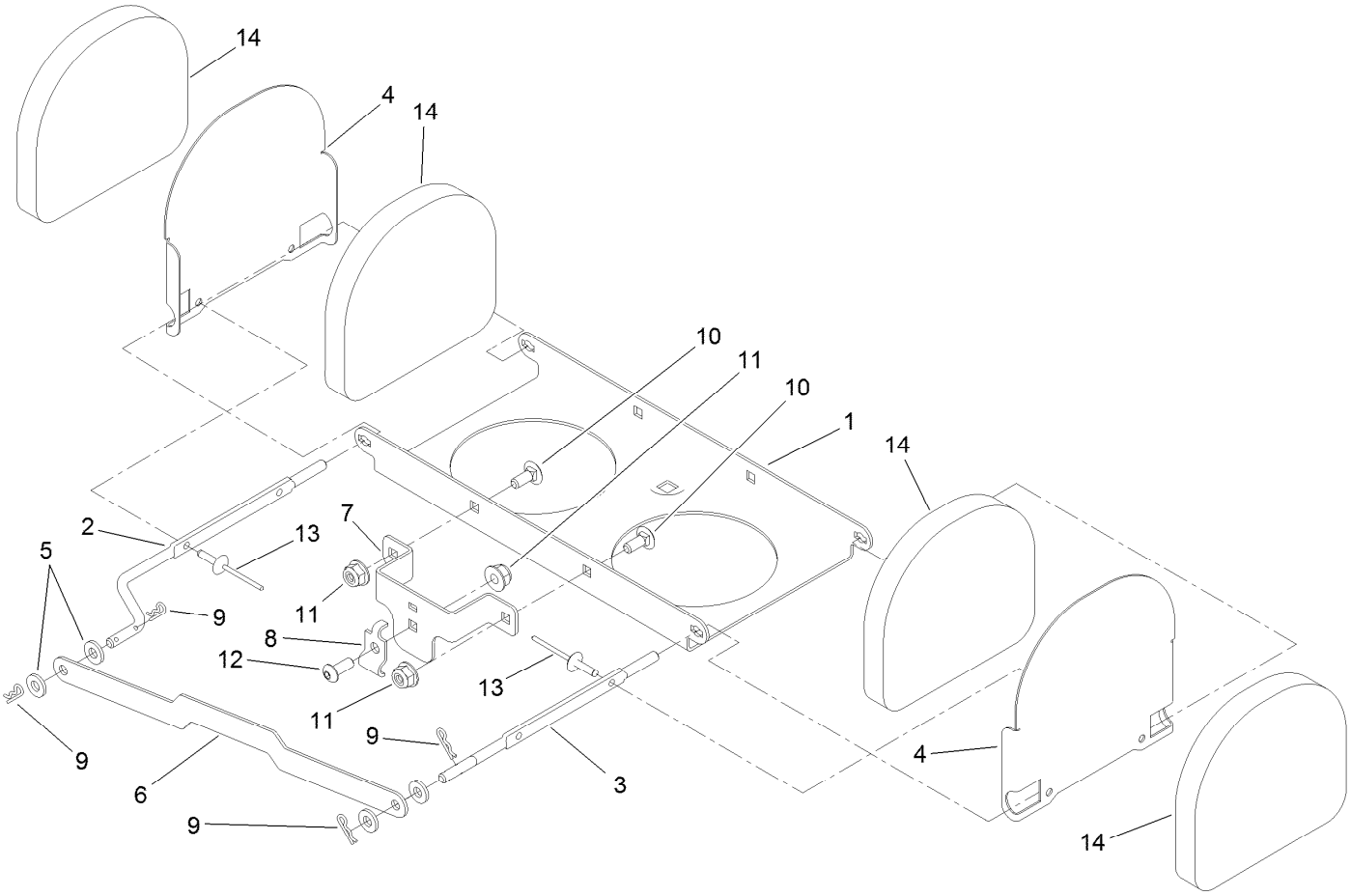

Air Diverter Assembly No. 121-8369

Ref.	Part Number	Qty.	Description
1	125-9697	1	Base-Mount
2	121-8381	1	Shaft-Baffle, RH
3	121-8382	1	Shaft-Baffle, LH
4	125-9698	2	Baffle-Air
5	3256-51	4	Washer-Flat
6	125-9696	1	Link-Baffle
7	121-8374	1	Mount-Cable
8	121-8256	1	Clamp-Conduit
9	108-2992	4	Pin-Hair
10	1-807513	2	Bolt-CARR
11	120-4578	3	Nut-HF
12	115-9830	1	Screw-HSBH
13	3290-271	4	Rivet-Pop
14	125-9699	4	Damper-Foam

Cylinder Block Assembly

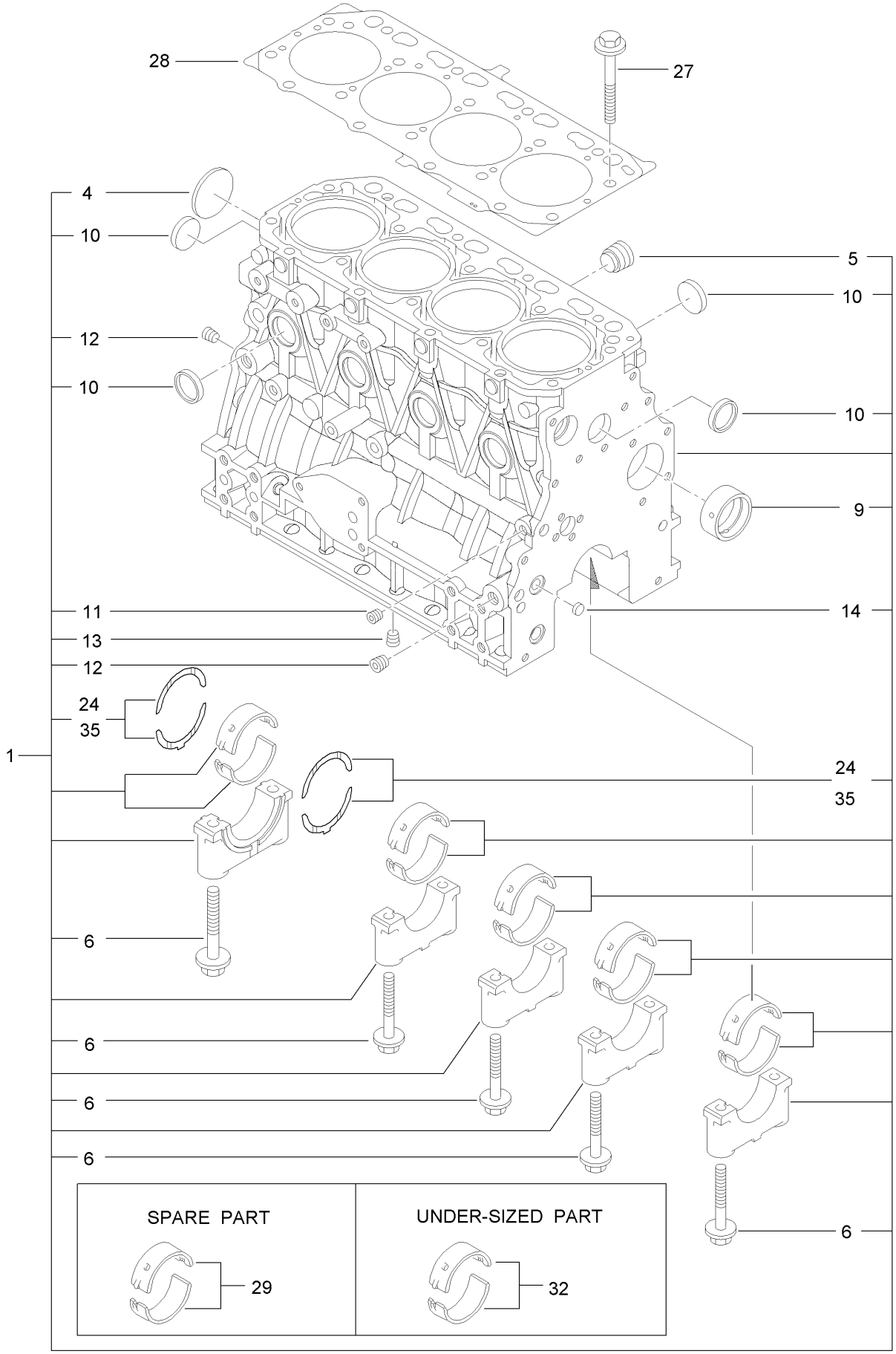

Cylinder Block Assembly (continued)

Ref.	Part Number	Qty.	Description
1	127-3127	1	Cylinder Block ASM
4	125-6980	1	Plug
5	125-7170	1	Plug
6	125-7007	10	Bolt
9	125-7108	1	Bushing
10	125-7239	8	Plug
11	125-6969	1	Plug
12	125-6973	2	Plug
13	125-6973	1	Plug
14	125-7237	1	Plug
24	125-7010	2	Metal-Thrust
27	125-7006	18	Bolt
28	127-3126	1	Gasket-Head, Cylinder
29	125-6981	5	Metal-Main
32	125-7009	5	Metal-Main (0.25)
35	125-7011	1	Metal-Thrust (0.25)

Cylinder Head and Cover Assembly

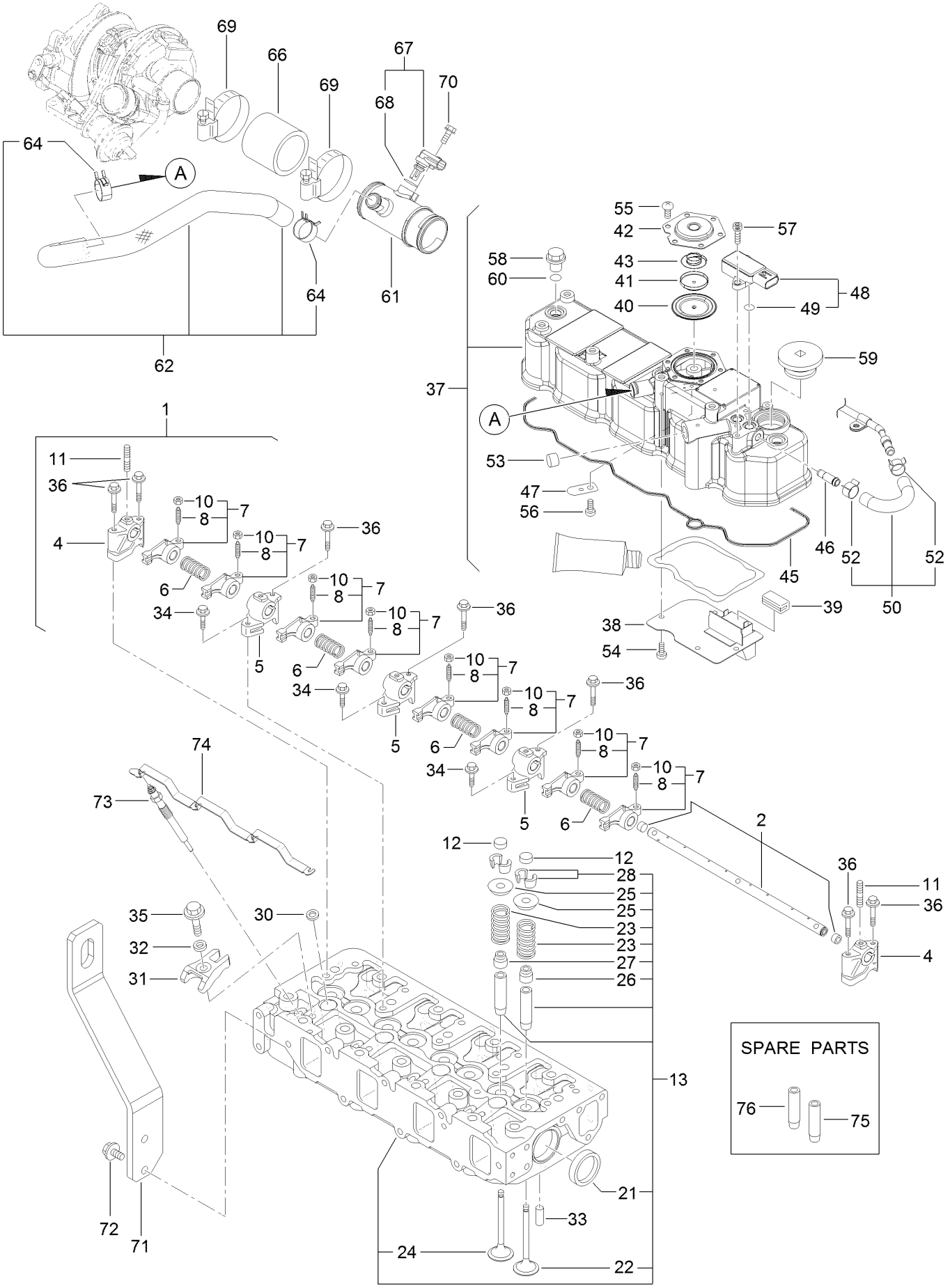

Cylinder Head and Cover Assembly (continued)

Ref.	Part Number	Qty.	Description
1	127-3005	1	Shaft ASM
2	127-3006	1	Shaft
4	127-2974	2	Support
5	127-2975	3	Support
6	127-2995	4	Spring
7	127-2989	8	Arm-Rocker
8	125-7013	8	Screw-Adjust, Valve
10	125-7014	8	Nut
11	127-3183	3	Stud
12	127-2996	8	Cap-Valve
13	127-3132	1	Cylinder Head ASM
21	125-7240	2	Plug
22	127-2990	4	Valve
23	127-3012	8	Spring
24	127-2994	4	Valve
25	127-3013	8	Retainer-Spring
26	127-2986	4	Seal-Stem, Valve
27	127-3027	4	Seal-Stem, Valve
28	127-3186	8	Pin-Cotter
30	127-3021	4	Gasket-Injector
31	127-3028	4	Retainer-Injector
32	127-2980	4	Washer-Injector
33	125-7184	2	Pin-Spring
34	125-7215	3	Bolt
35	125-7217	4	Bolt
36	125-7220	7	Bolt
37	127-3131	1	Cylinder Head Cover ASM
38	127-2988	1	Plate
39	125-7012	1	Baffle
40	125-6959	1	Diaphragm
41	125-6960	1	Plate
42	125-6961	1	Plate-Breather
43	125-6962	1	Spring-Diaphragm
45	127-3106	1	Gasket-Cover
46	127-3026	1	Joint
47	125-6994	1	Spring
48	127-3029	1	Sensor-Pressure
49	127-3032	2	O Ring-Sensor, Pressure
50	127-3040	1	Hose ASM
52	127-3041	2	Clip-Hose
53	125-6913	1	Plug
54	125-7186	4	Screw
55	125-7186	6	Screw
56	125-7186	1	Screw
57	127-3184	2	Bolt
58	125-6974	3	Knob
59	127-2978	1	Plug
60	93-0418	3	O-Ring
61	127-3128	1	Joint-Breather
62	127-3129	1	Breather Hose ASM
64	125-7040	2	Clip-Hose
66	127-3133	1	Hose-Intake
67	127-3030	1	Sensor-Temp, Air
68	127-3033	1	O-Ring
69	125-7190	2	Clamp-Hose
70	125-7208	1	Bolt
71	127-3130	1	Lifter-Engine
72	125-7214	2	Bolt
73	127-2991	4	Plug-Glow
74	127-3123	1	Connector-Glow Plug
75	127-2979	4	Guide
76	127-2997	4	Guide-Valve

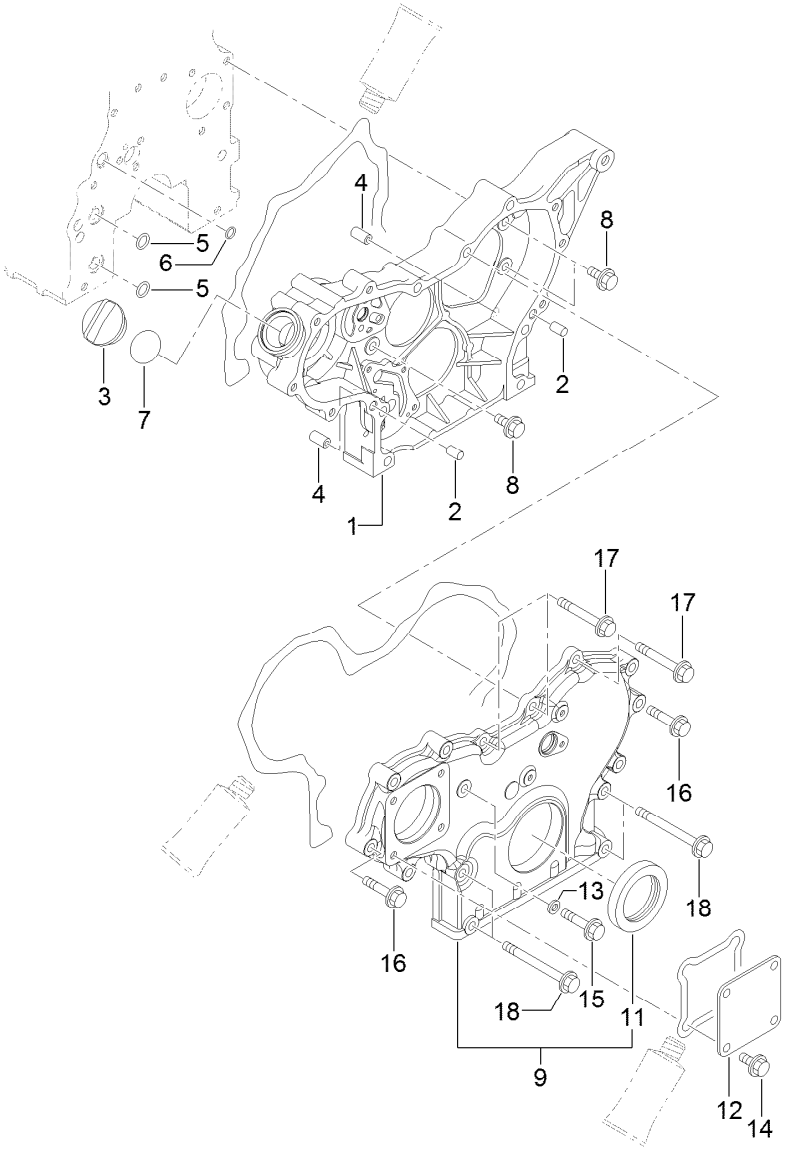

Gear Housing Assembly

Ref.	Part Number	Qty.	Description
1	127-3023	1	Case-Gear
2	125-6995	2	Pin
3	125-6972	1	Cover-Filler
4	125-7107	2	Pipe
5	125-6909	2	O-Ring
6	127-2973	1	O-Ring
7	125-7197	1	O-Ring
8	125-7214	3	Bolt
9	127-3024	1	Gearcase Cover ASM

Ref.	Part Number	Qty.	Description
11	125-6944	1	Seal-Oil
12	125-6977	1	Cover
13	125-7174	1	Washer-Seal
14	125-7214	4	Bolt
15	125-7217	1	Bolt
16	125-7218	7	Bolt
17	125-7222	3	Bolt
18	125-7224	4	Bolt

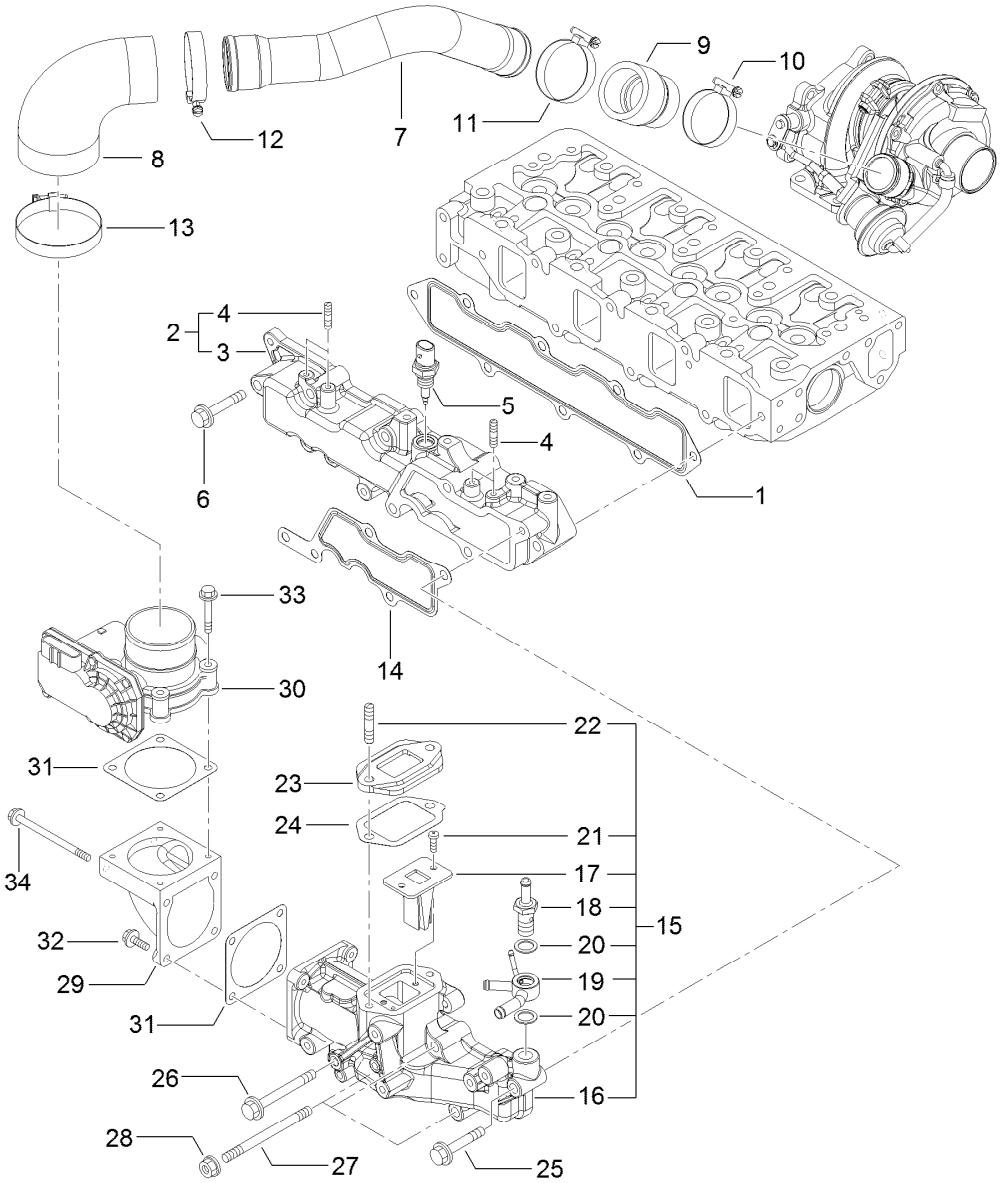

Suction Manifold Assembly

Ref.	Part Number	Qty.	Description
1	127-3107	1	Gasket-Manifold, Intake
2	127-3135	1	Intake Manifold ASM
3	127-3134	1	Manifold-Intake
4	127-3180	4	Stud
5	127-3031	1	Sensor-Temp, Air
6	125-7220	5	Bolt
7	127-3152	1	Duct-Suction
8	127-3096	1	Joint-Rubber
9	127-3153	1	Joint-Rubber
10	125-7189	1	Clamp-Hose
11	127-3170	1	Clamp-Hose
12	125-7190	1	Clamp-Hose
13	127-3171	1	Clamp-Hose
14	127-3034	1	Gasket-Collector
15	127-3093	1	Intake Collector ASM
16	127-3092	1	Collector-Intake
17	127-3139	1	Valve-Reed

Ref.	Part Number	Qty.	Description
18	127-3080	1	Joint-Hose
19	127-3081	1	Joint-Hose
20	127-3166	2	Washer-Seal
21	127-3168	2	Screw
22	127-3181	2	Stud
23	127-3045	1	Spacer-Valve, E G R
24	127-3046	1	Gasket-E G R
25	125-7220	1	Bolt
26	127-3178	1	Bolt
27	127-3182	3	Stud
28	125-7229	3	Nut
29	127-3035	1	Bend-Inlet
30	127-3036	1	Body-Throttle
31	127-3037	2	Gasket-Throttle
32	125-7209	2	Bolt
33	125-7211	4	Bolt
34	127-3177	2	Bolt

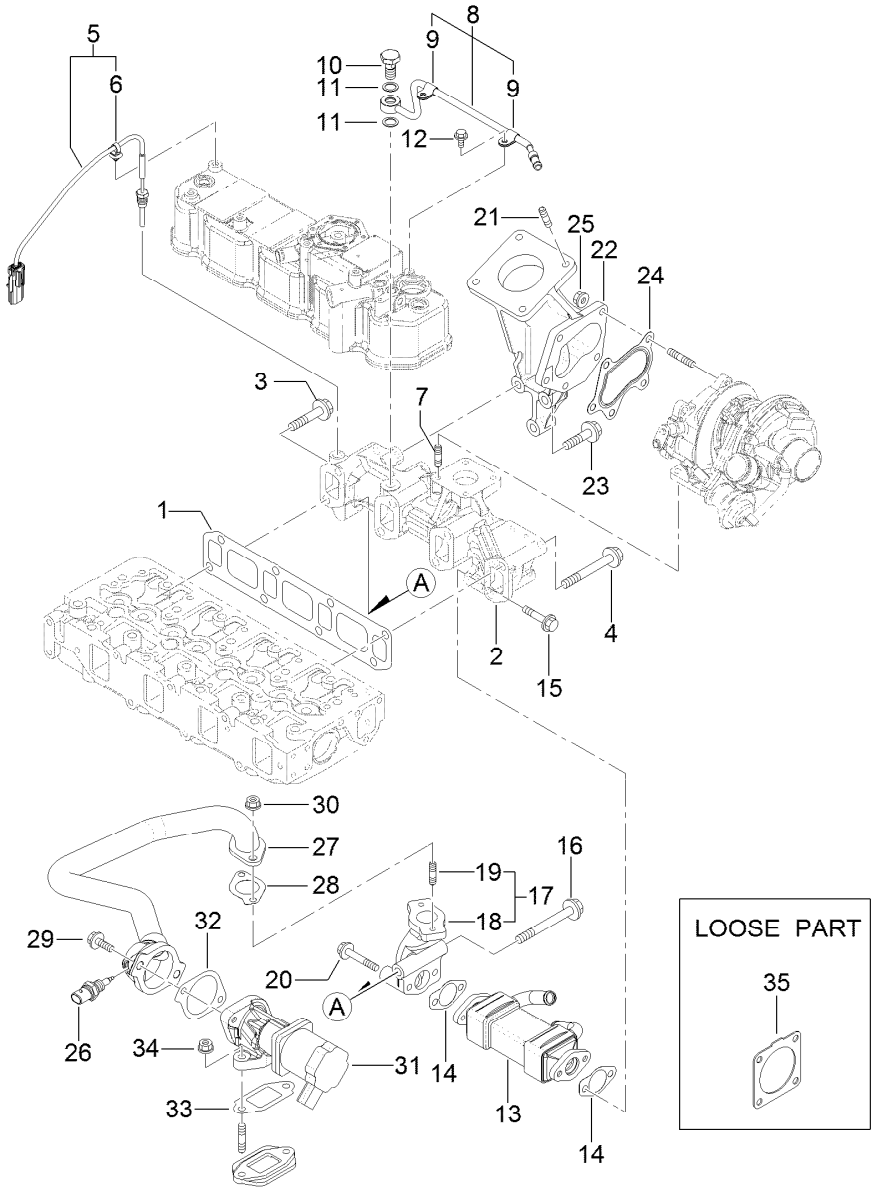

Exhaust Manifold Assembly

Ref.	Part Number	Qty.	Description
1	127-3108	1	Gasket-Manifold, Exhaust
2	127-3136	1	Manifold-Exhaust
3	127-3094	1	Bolt
4	127-3044	7	Bolt-M10
5	127-3140	1	Sensor-Temp, Exhaust
6	127-3087	1	Band-Clip
7	125-7043	4	Stud
8	127-3038	1	Exhaust Pipe ASM
9	127-3173	2	Clamp
10	127-3039	1	Bolt-Joint, Pipe
11	127-3174	2	Gasket
12	125-7206	2	Bolt
13	127-3042	1	Cooler-E G R
14	127-3043	2	Gasket-Cooler, E G R
15	127-2976	2	Bolt
16	127-3022	1	Bolt-Flange
17	127-3048	1	E G R Pipe ASM
18	127-3049	1	Pipe-Out, E G R

Ref.	Part Number	Qty.	Description
19	125-7043	2	Stud
20	125-7220	2	Bolt
21	127-2984	4	Stud
22	127-3137	1	Pipe-Exhaust
23	127-3138	3	Bolt-Flange
24	125-7071	1	Gasket
25	125-7229	5	Nut
26	127-3047	1	Sensor-Gas Temp, E G R
27	127-3109	1	E G R Pipe ASM
28	127-3016	1	Gasket
29	125-7215	2	Bolt
30	125-7229	2	Nut
31	127-3110	1	Valve-E G R
32	127-3050	1	Gasket-Intake Valve, E G R
33	127-3051	1	Gasket-Out Valve, E G R
34	125-7229	2	Nut
35	127-3019	1	Gasket

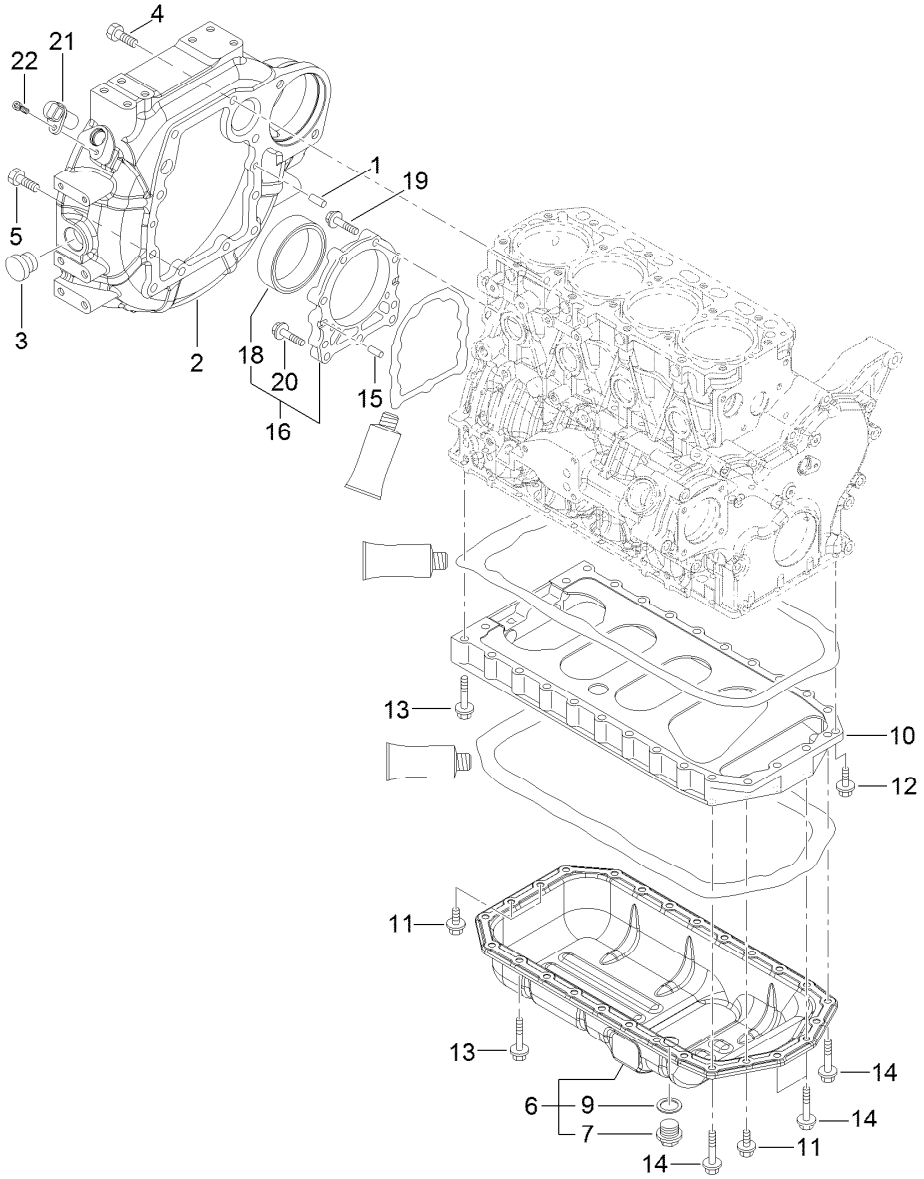

Flywheel Housing and Oil Sump Assembly

Ref.	Part Number	Qty.	Description
1	125-6995	2	Pin
2	127-3025	1	Housing-Flywheel
3	125-6910	1	Cap
4	125-7226	6	Bolt
5	125-7227	4	Bolt
6	125-7241	1	Oil Sump ASM
7	125-6912	1	Plug-Drain
9	125-7177	1	Washer-Seal
10	125-7035	1	Spacer
11	125-7214	4	Bolt

Ref.	Part Number	Qty.	Description
12	125-7215	2	Bolt
13	125-7219	20	Bolt
14	125-7220	4	Bolt
15	125-6995	2	Pin
16	125-6996	1	Case ASM
18	125-7106	1	Seal-Oil
19	125-7045	6	Bolt
20	125-7217	3	Bolt
21	127-3062	1	Sensor-Rev, Flywheel
22	127-3184	1	Bolt

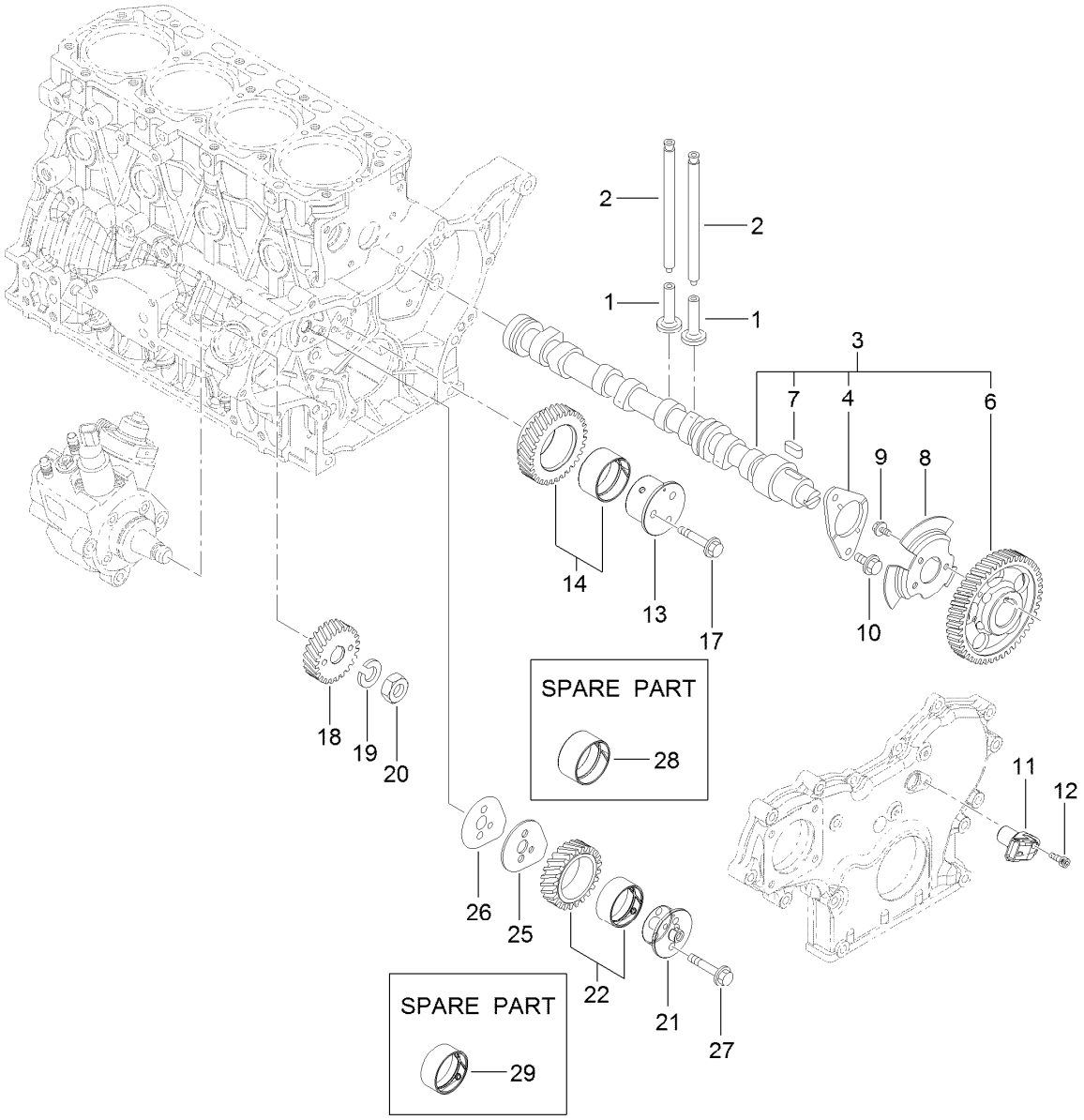

Camshaft and Driving Gear Assembly

Ref.	Part Number	Qty.	Description
1	125-7016	8	Tappet
2	125-7017	8	Rod-Push
3	127-3113	1	Camshaft ASM
4	125-7008	1	Metal-Thrust
6	127-3052	1	Gear-Camshaft
7	125-7185	1	Key
8	127-3053	1	Pulser-Camshaft
9	125-7205	3	Bolt
10	125-7213	2	Bolt
11	127-3054	1	Sensor-Rev, Gear
12	127-3184	1	Bolt
13	127-3063	1	Shaft-Idle, Gear A

Ref.	Part Number	Qty.	Description
14	127-3066	1	Idle Gear A ASM
17	125-7219	3	Bolt
18	127-3070	1	Gear-Pump, Supply
19	127-3167	1	Washer-Spring
20	127-3185	1	Nut-Lock
21	127-3064	1	Shaft-Idle, Gear B
22	127-3067	1	Idle Gear B ASM
25	127-3068	1	Plate-Idle, Shaft
26	127-3069	1	Gasket-Idle, Shaft B
27	125-7218	2	Bolt
28	125-6927	1	Bushing
29	127-3065	1	Bushing

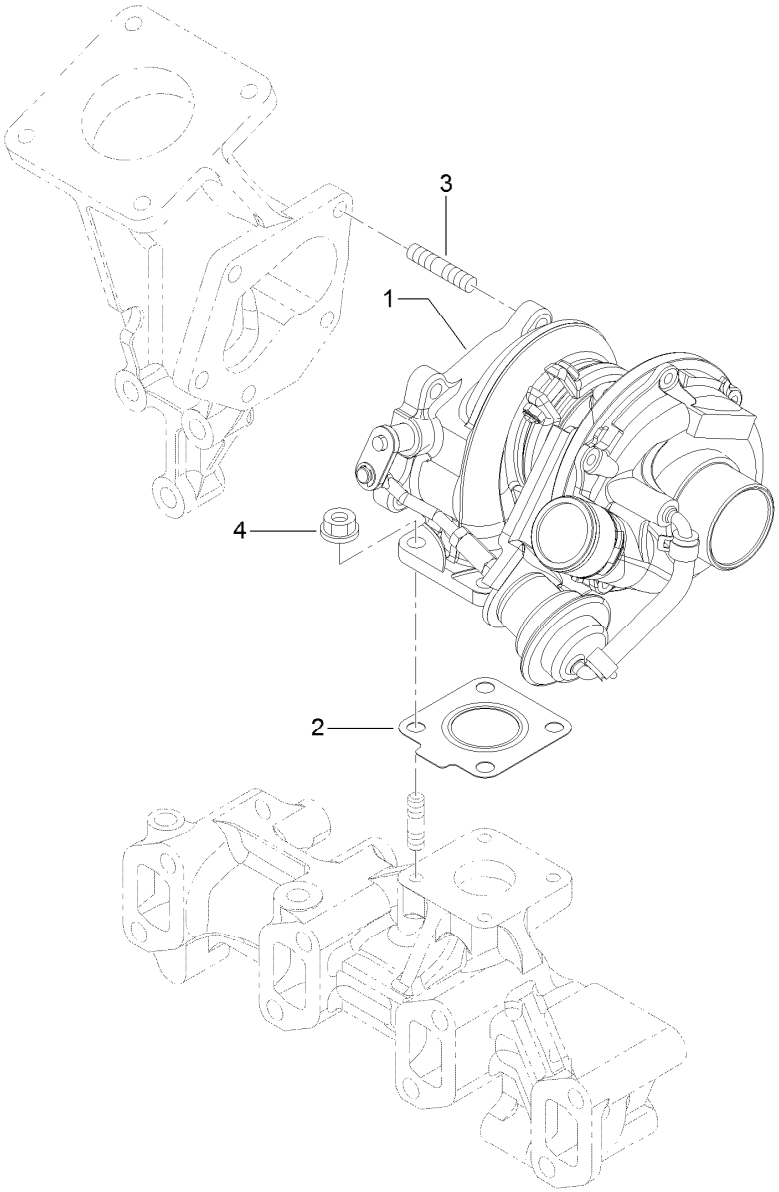

Turbine Assembly

Ref.	Part Number	Qty.	Description
1	127-3151	1	Turbine ASM
2	125-7070	1	Gasket
3	125-6906	5	Stud
4	125-7229	4	Nut

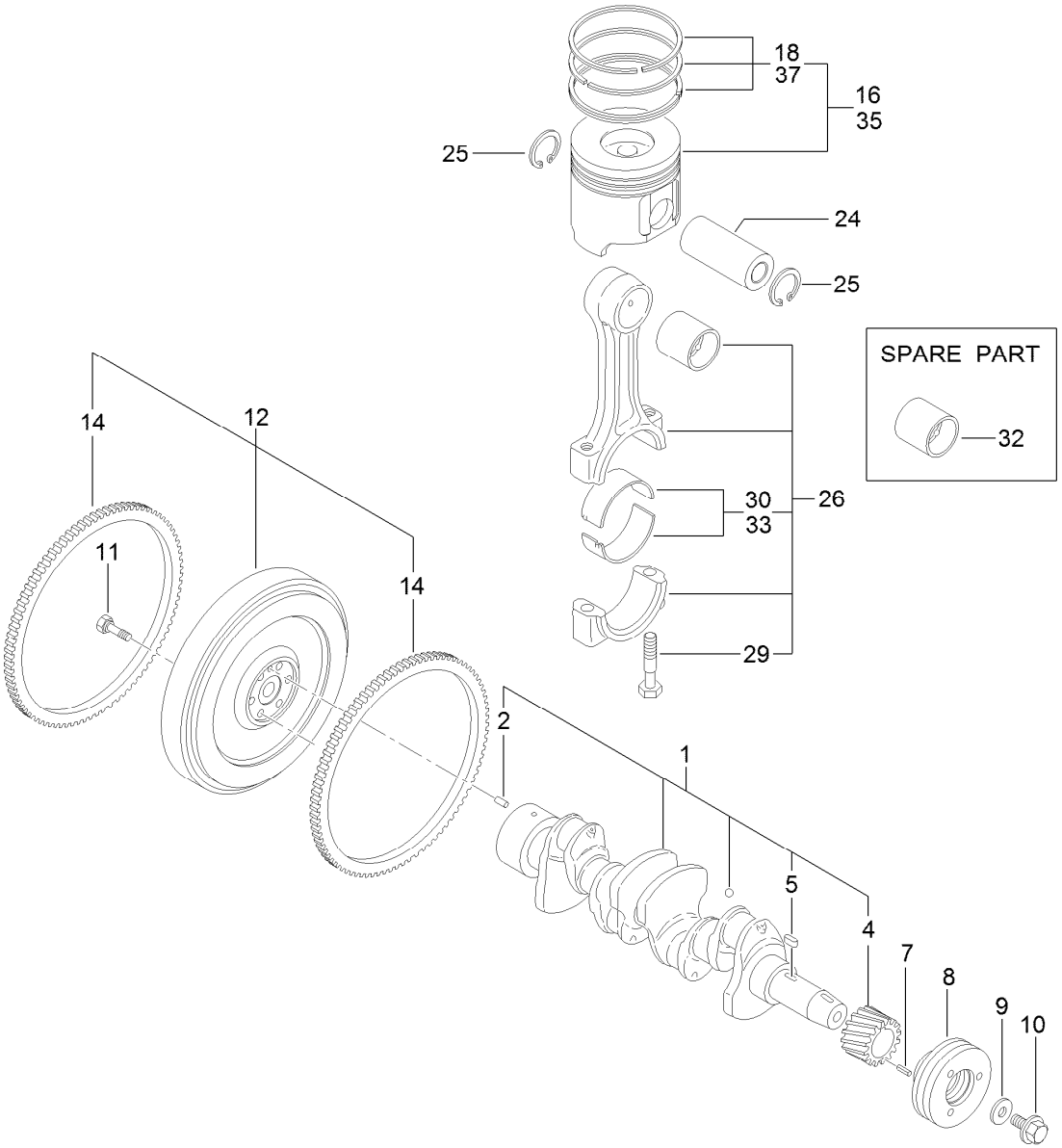

Crankshaft and Piston Assembly

Ref.	Part Number	Qty.	Description
1	125-7091	1	Crankshaft ASM
2	125-6995	1	Pin
4	125-6937	1	Gear
5	125-7185	1	Key
7	125-7182	1	Pin-Spring
8	125-6925	1	V-Pulley
9	125-7109	1	Washer
10	125-6956	1	Bolt
11	125-6951	6	Bolt
12	127-3160	1	Flywheel ASM
14	125-6943	1	Gear

Ref.	Part Number	Qty.	Description
16	127-3097	4	Piston ASM
18	127-3098	4	Piston Ring ASM
24	125-7030	4	Pin
25	125-7180	8	Ring
26	125-7242	4	Connecting Rod ASM
29	125-6955	8	Bolt
30	125-7018	4	Pin-Crank
32	125-6997	4	Pin-Piston
33	125-7019	4	Pin-Crank (.25)
35	127-3099	4	Piston ASM (0.25 O.S.)
37	127-3100	4	Piston Ring ASM (0.25 O.S.)

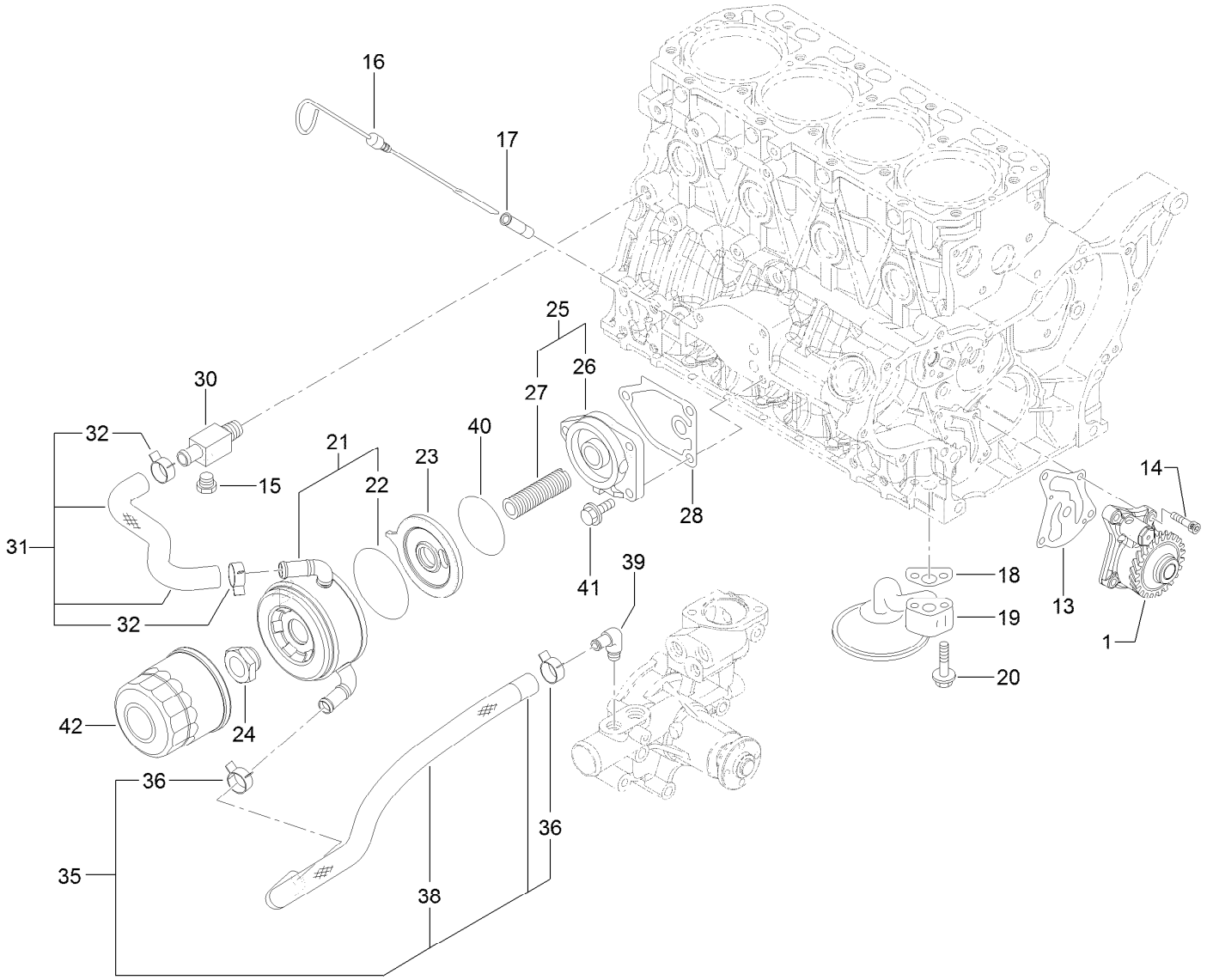

Lubrication and Oil System Assembly

Ref.	Part Number	Qty.	Description
1	127-3101	1	Oil Lube Pump ASM
13	127-3004	1	Gasket
14	125-7232	4	Bolt
15	125-7171	1	Plug-Drain
16	125-6987	1	Dipstick
17	125-6954	1	Guide-Dipstick
18	125-7022	1	Gasket
19	125-7023	1	Pipe ASM
20	125-7217	2	Bolt
21	127-3014	1	Cooler ASM
22	127-2985	1	O-Ring
23	127-3015	1	Bracket-Cooler
24	125-7041	1	Nut-Cooler, Oil
25	127-3009	1	Bracket ASM

Ref.	Part Number	Qty.	Description
26	125-6930	1	Bracket
27	127-3010	1	Stud
28	125-7024	1	Gasket
30	125-6990	1	Joint
31	127-3102	1	Pipe-Cooling, Water
32	125-7162	2	Clip
35	127-3103	1	Hose-Cooling, Water
36	125-7162	2	Clip
38	127-3007	1	Tube
39	125-7001	1	Elbow
40	127-3176	1	O-Ring
41	125-7595	3	Bolt
42	125-7025	1	Filter-Engine, Oil

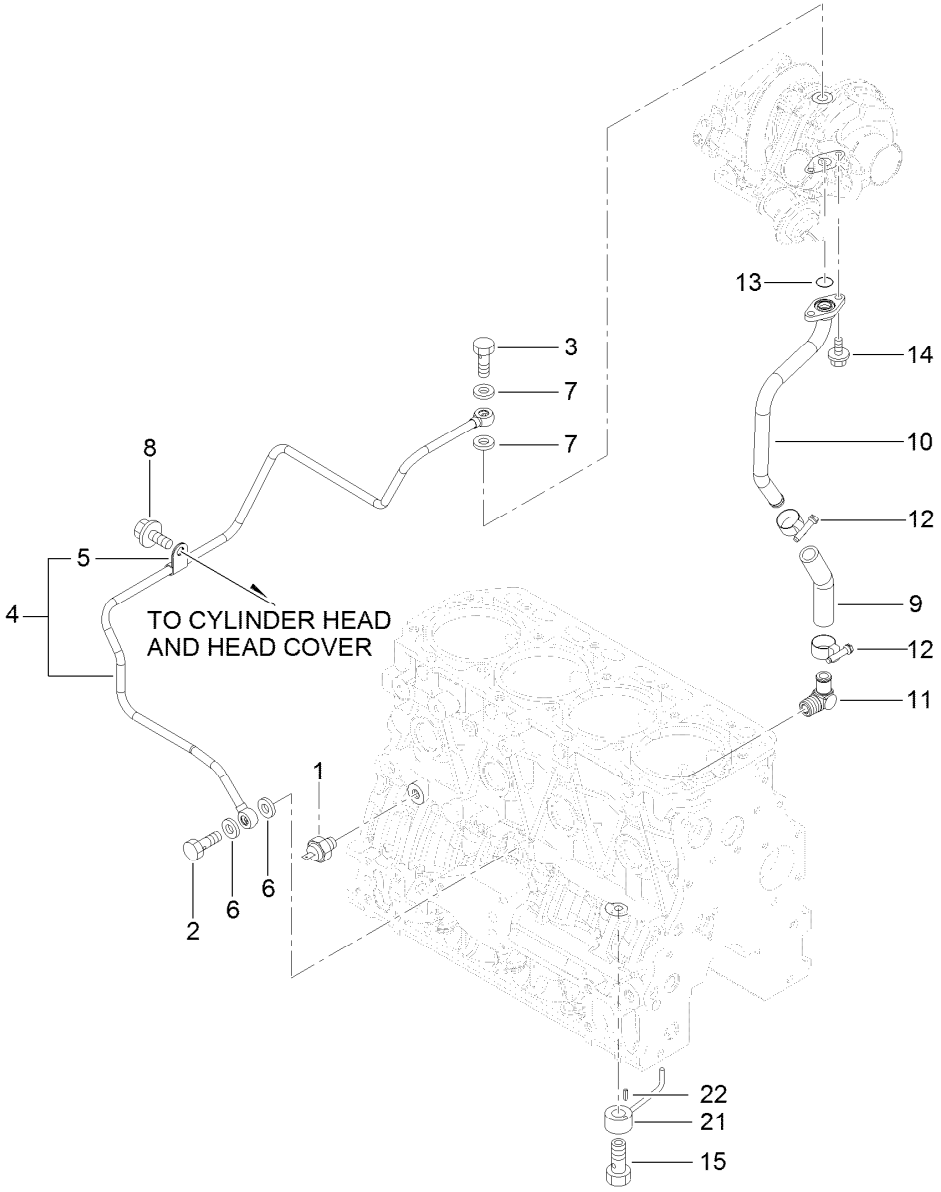

Lubrication Oil Line Assembly

Ref.	Part Number	Qty.	Description
1	125-6918	1	Switch-Oil
2	125-6975	1	Bolt-Joint, Pipe
3	125-6952	1	Bolt-Joint, Pipe
4	127-3154	1	Lube Oil Pipe ASM
5	125-6976	1	Retainer
6	125-7175	2	Washer-Seal
7	125-7193	2	Gasket
8	93-0362	1	Bolt
9	127-2992	1	Joint

Ref.	Part Number	Qty.	Description
10	127-3155	1	Pipe-Lube, Oil
11	127-3003	1	Elbow
12	127-3169	2	Clamp-Hose
13	125-7198	1	O-Ring
14	125-7208	2	Bolt
15	125-7105	4	Check Valve ASM
21	125-7098	4	Nozzle
22	125-7182	4	Pin-Spring

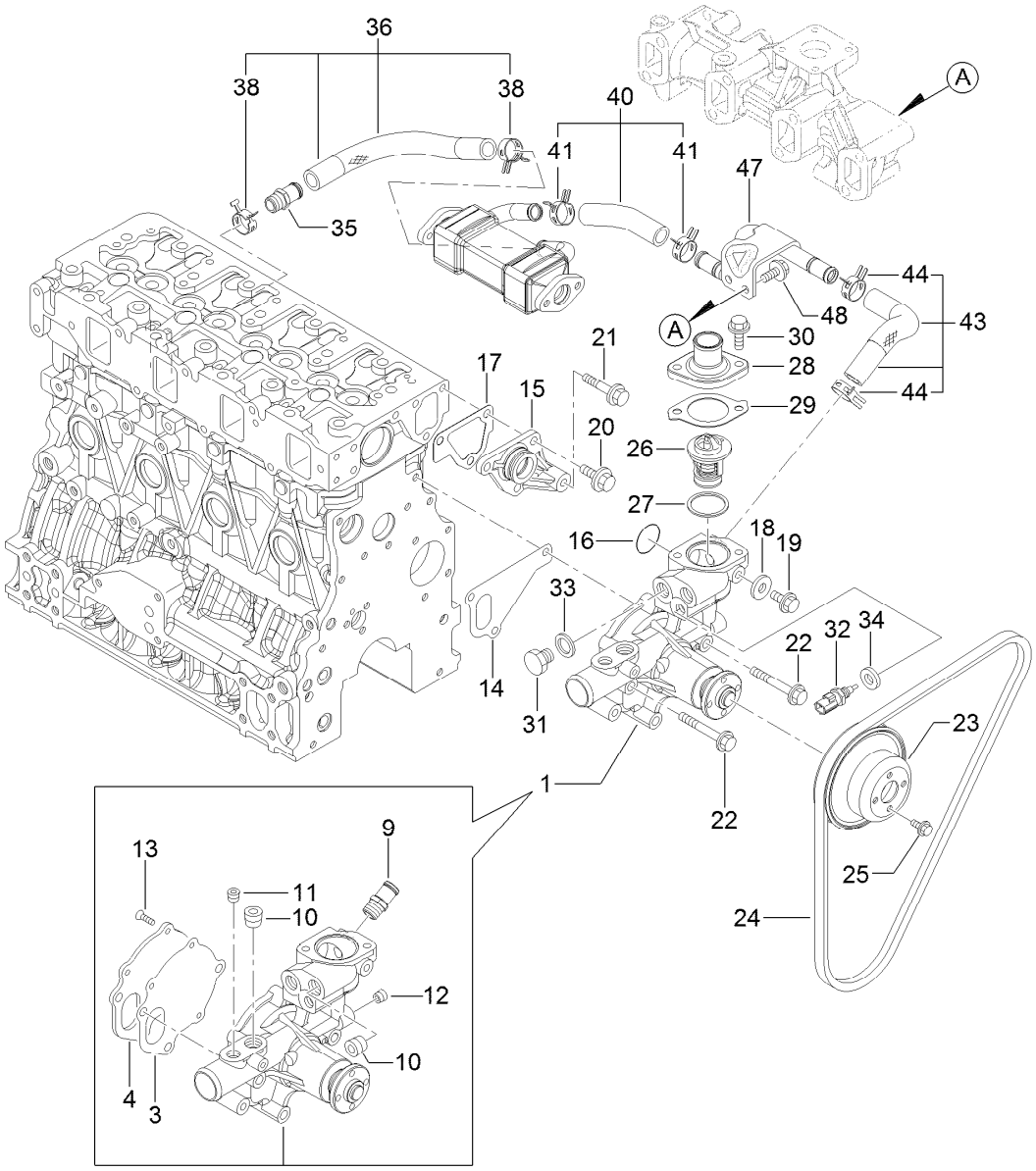

Cooling Water System Assembly

Ref.	Part Number	Qty.	Description
1	127-3071	1	Water Pump ASM
3	125-6998	1	Gasket
4	125-6999	1	Plate
9	127-3017	1	Joint
10	125-7123	2	Plug
11	127-3175	1	Plug
12	125-7195	1	Plug
13	125-7234	3	Screw
14	125-7047	1	Gasket
15	125-6986	1	Joint
16	125-7048	1	O-Ring
17	125-6978	1	Gasket
18	125-7192	1	Gasket
19	93-0362	1	Bolt
20	125-7214	3	Bolt
21	125-7219	1	Bolt
22	125-7222	3	Bolt
23	125-7039	1	V-Pulley
24	127-2998	1	V-Belt

Ref.	Part Number	Qty.	Description
25	125-7206	4	Bolt
26	125-7029	1	Thermostat
27	125-7026	1	Gasket
28	125-7034	1	Cover
29	125-7110	1	Gasket
30	125-7594	2	Bolt
31	125-6953	1	Plug
32	125-7124	1	Sensor-Thermostat, CW
33	125-6979	1	Gasket
34	125-7176	1	Washer-Seal
35	127-3017	1	Joint
36	127-3072	1	Water In Pipe ASM
38	127-3020	2	Clip-Hose
40	127-3115	1	Water Out Pipe ASM
41	127-3020	2	Clip-Hose
43	127-3116	1	Water Out Pipe ASM
44	127-3020	2	Clip-Hose
47	127-3117	1	Pipe-Out, CW
48	125-7214	2	Bolt

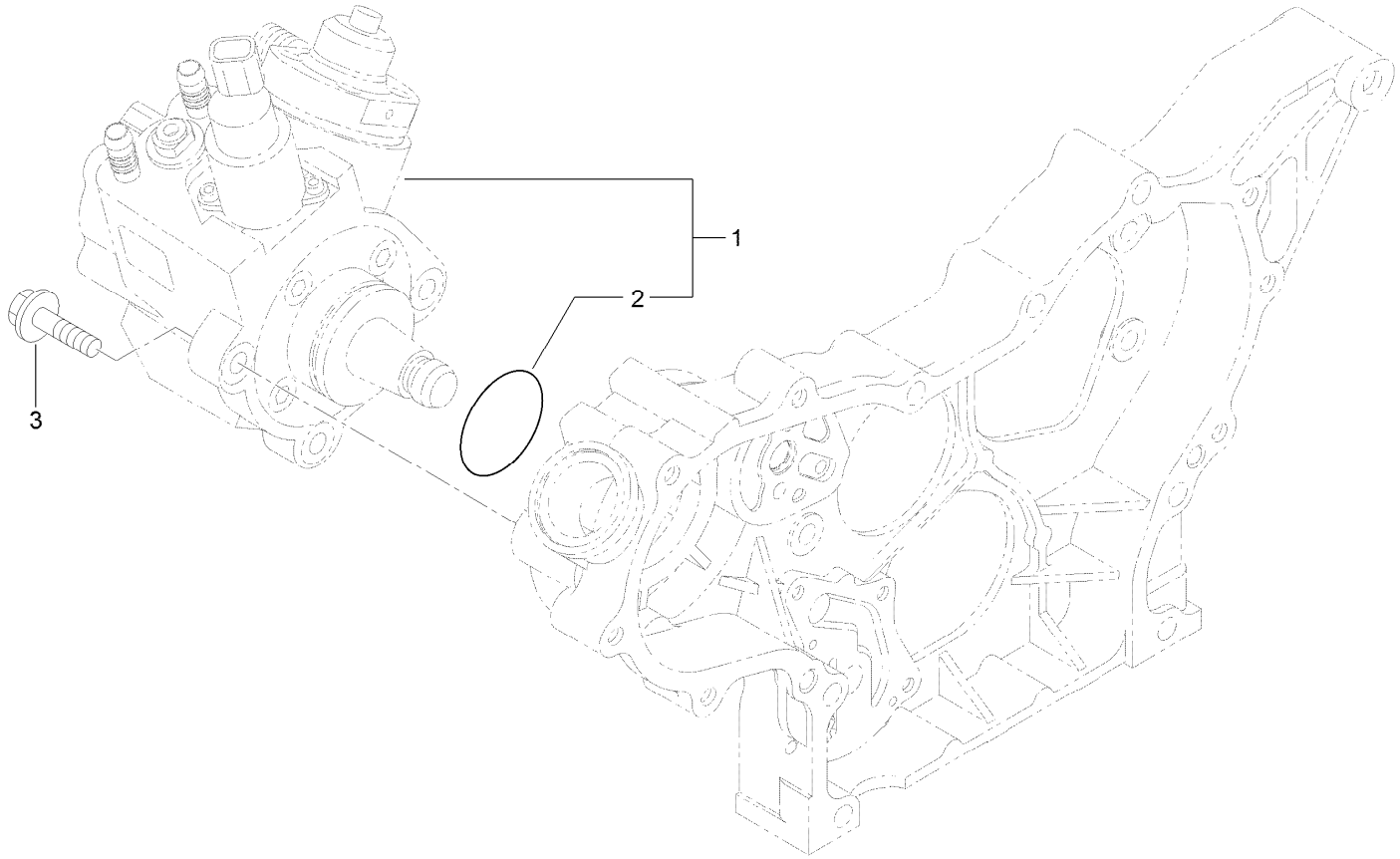

Fuel System Assembly

Ref.	*Part Number*	*Qty.*	*Description*
1	127-3073	1	Fuel Pump ASM
2	127-3074	1	O-Ring
3	125-7216	3	Bolt

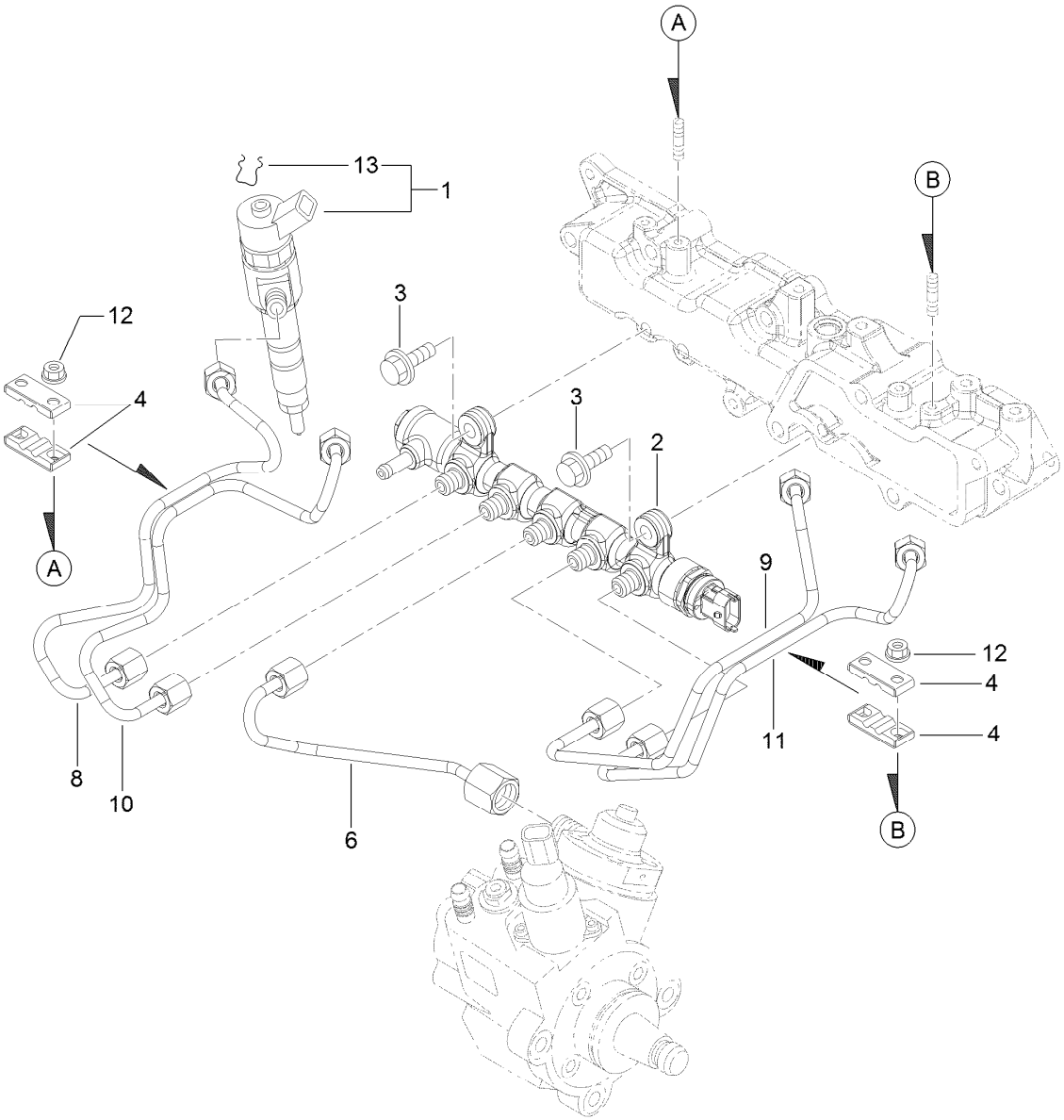

Fuel Injection Valve Assembly

Ref.	*Part Number*	*Qty.*	*Description*
1	127-3104	4	Injector ASM
2	127-3118	1	Rail ASM
3	125-7215	2	Bolt
4	127-2982	4	Retainer
6	127-3082	1	Rail In Pipe ASM
8	127-3121	1	Injection Pipe ASM
9	127-3083	1	Injection Pipe ASM
10	127-3122	1	Injection Pipe ASM
11	127-3084	1	Injection Pipe ASM
12	125-7231	4	Nut
13	130-7430	4	Ring-Retaining

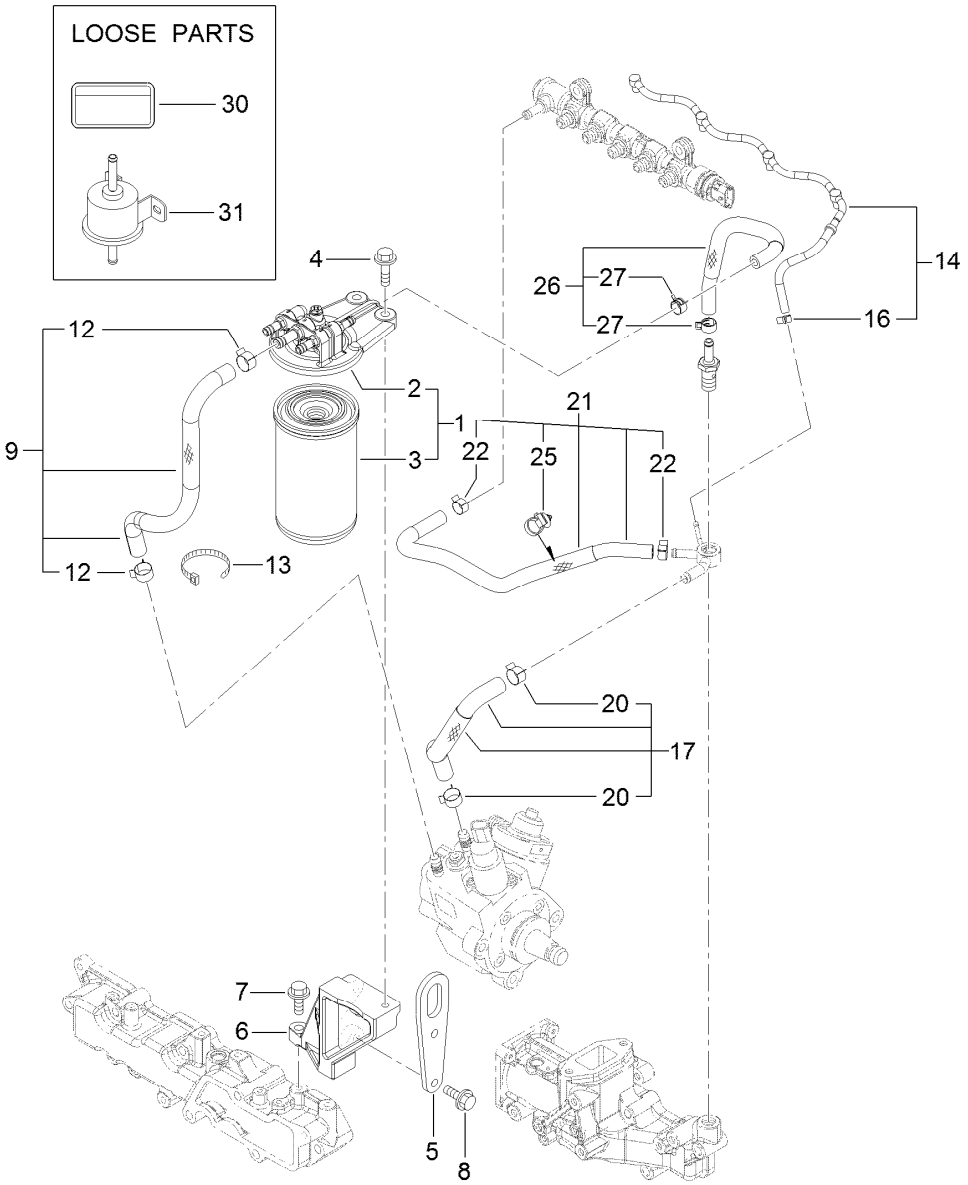

Fuel Line Assembly

Ref.	Part Number	Qty.	Description
1	127-3075	1	Fuel/Oil Filter ASM
2	127-3076	1	Fuel/Oil Filter Bracket ASM
3	125-8752	1	Filter-Fuel/Oil
4	125-7216	2	Bolt
5	127-3091	1	Lifter-Engine
6	127-3105	1	Stay-Bracket, Filter
7	125-7215	1	Bolt
8	125-7216	2	Bolt
9	127-3077	1	Fuel Pipe ASM
12	125-7191	2	Clamp-Hose
13	127-2981	1	Band

Ref.	Part Number	Qty.	Description
14	127-3120	1	Fuel Pipe ASM
16	127-3172	1	Clamp-Hose
17	127-3078	1	Fuel Pipe ASM
20	125-7191	2	Clamp-Hose
21	127-3119	1	Fuel Pipe ASM
22	127-2950	2	Clip-Hose
25	127-3087	1	Band-Clip
26	127-3079	1	Fuel Pipe ASM
27	127-2950	2	Clip-Hose
30	125-6900	1	Label-Caution, Fuel Oil
31	127-3008	1	Fuel Feed Pump ASM

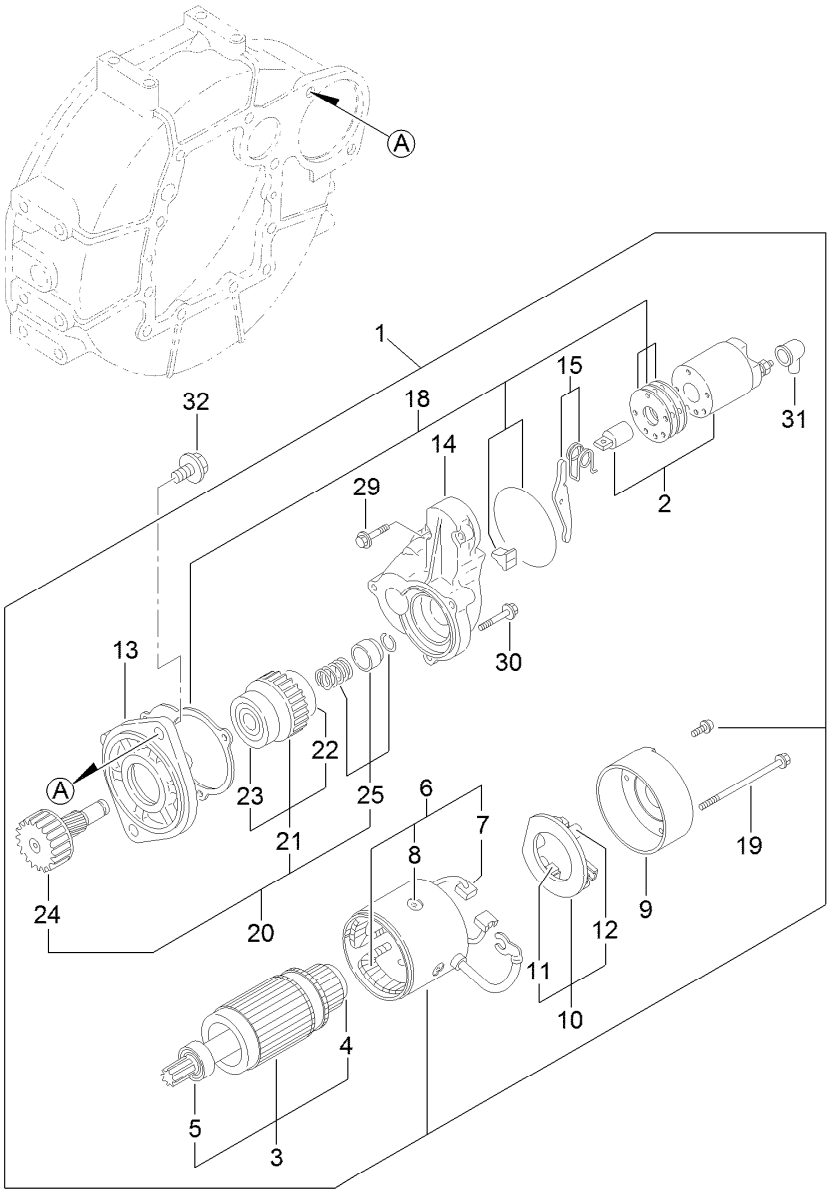

Starting Motor Assembly

Ref.	Part Number	Qty.	Description
1	125-7003	1	Starter
2	125-7004	1	Switch ASM
3	125-7112	1	Armature ASM
4	125-7252	1	Bearing-Ball
5	125-7249	1	Bearing, Ball
6	125-7113	1	Field Coil ASM
7	125-7114	2	Brush
8	125-7163	4	Screw
9	125-7115	1	Cover
10	125-7116	1	Brush Holder ASM
11	125-7114	2	Brush
12	125-7036	4	Spring
13	125-7164	1	Case-Gear
14	125-7005	1	Housing

Ref.	Part Number	Qty.	Description
15	125-7165	1	Lever Set
18	125-7037	1	Dust Cover ASM
19	125-7117	2	Bolt-Through
20	125-7166	1	Pinion ASM
21	125-7250	1	Clutch ASM
22	125-7251	1	Bearing-Ball
23	125-7253	1	Bearing-Ball
24	125-7167	1	Shaft
25	125-7168	1	Stopper Set
29	125-7210	2	Bolt
30	125-7211	3	Bolt
31	125-7169	1	Cover
32	125-7225	2	Bolt

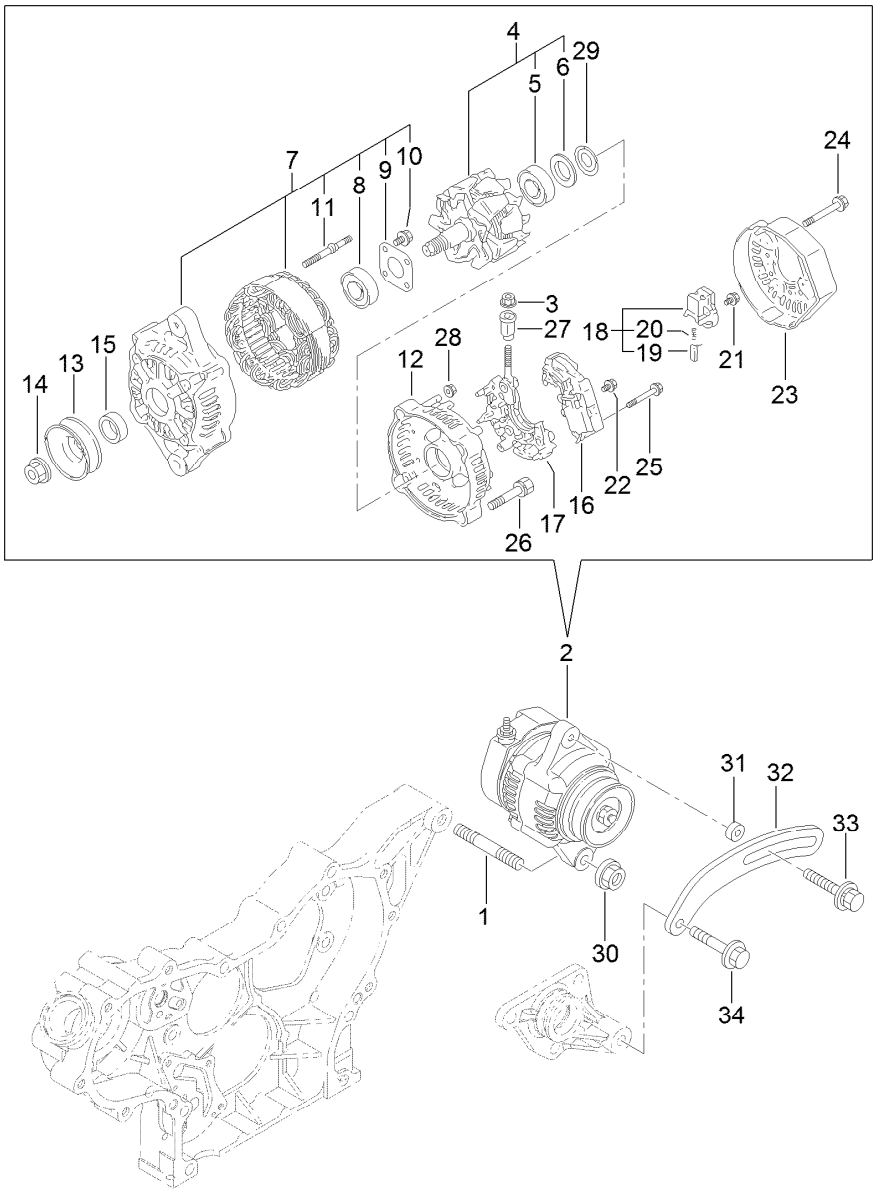

Generator Assembly

Ref.	Part Number	Qty.	Description
1	127-3011	1	Stud
2	127-3001	1	Generator
3	127-3190	1	Nut
4	127-2951	1	Rotor ASM
5	127-2983	1	Bearing-Ball
6	127-2962	1	Cover
7	127-2952	1	Frame ASM
8	127-2958	1	Bearing-Ball
9	127-2959	1	Plate-Retainer
10	127-2960	4	Screw
11	127-2961	2	Stud
12	127-2953	1	Frame ASM
13	127-2954	1	Pulley
14	127-2955	1	Nut
15	127-2957	1	Collar
16	127-3002	1	Regulator ASM
17	127-2963	1	Holder

Ref.	Part Number	Qty.	Description
18	127-2993	1	Holder
19	127-2956	2	Brush ASM
20	127-2964	2	Spring
21	127-2965	6	Screw
22	127-2966	1	Screw
23	127-2999	1	Cover
24	127-2967	3	Bolt
25	127-2968	2	Screw
26	127-2969	2	Bolt
27	127-2970	1	Bushing-Insulation
28	127-2971	2	Nut
29	127-2972	1	Washer
30	125-7230	1	Nut
31	125-6947	1	Spacer
32	127-2977	1	Adjuster
33	125-7134	1	Bolt
34	125-7219	1	Bolt

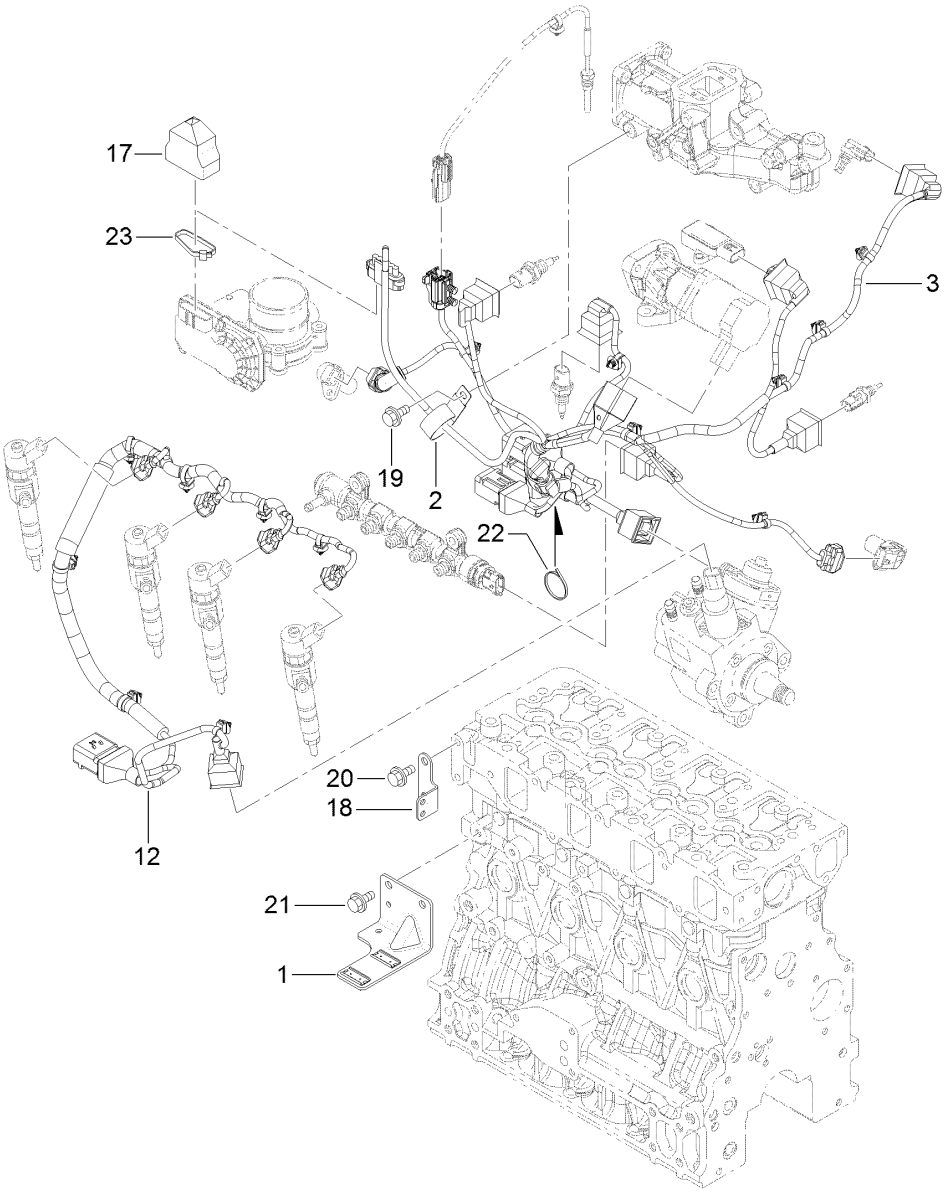

Electric Parts Assembly

Ref.	*Part Number*	*Qty.*	*Description*
1	127-3086	1	Bracket-Connector
2	127-3018	1	Clip
3	127-3156	1	Harness B-E C O, Engine
12	127-3125	1	Harness C
17	127-3089	1	Boot-Type, Cap
18	127-3090	1	Bracket-Harness
19	93-0362	1	Bolt
20	93-0362	2	Bolt
21	93-0362	2	Bolt
22	127-3187	1	Band
23	127-3188	1	Band

Diesel Particulate Filter Assembly

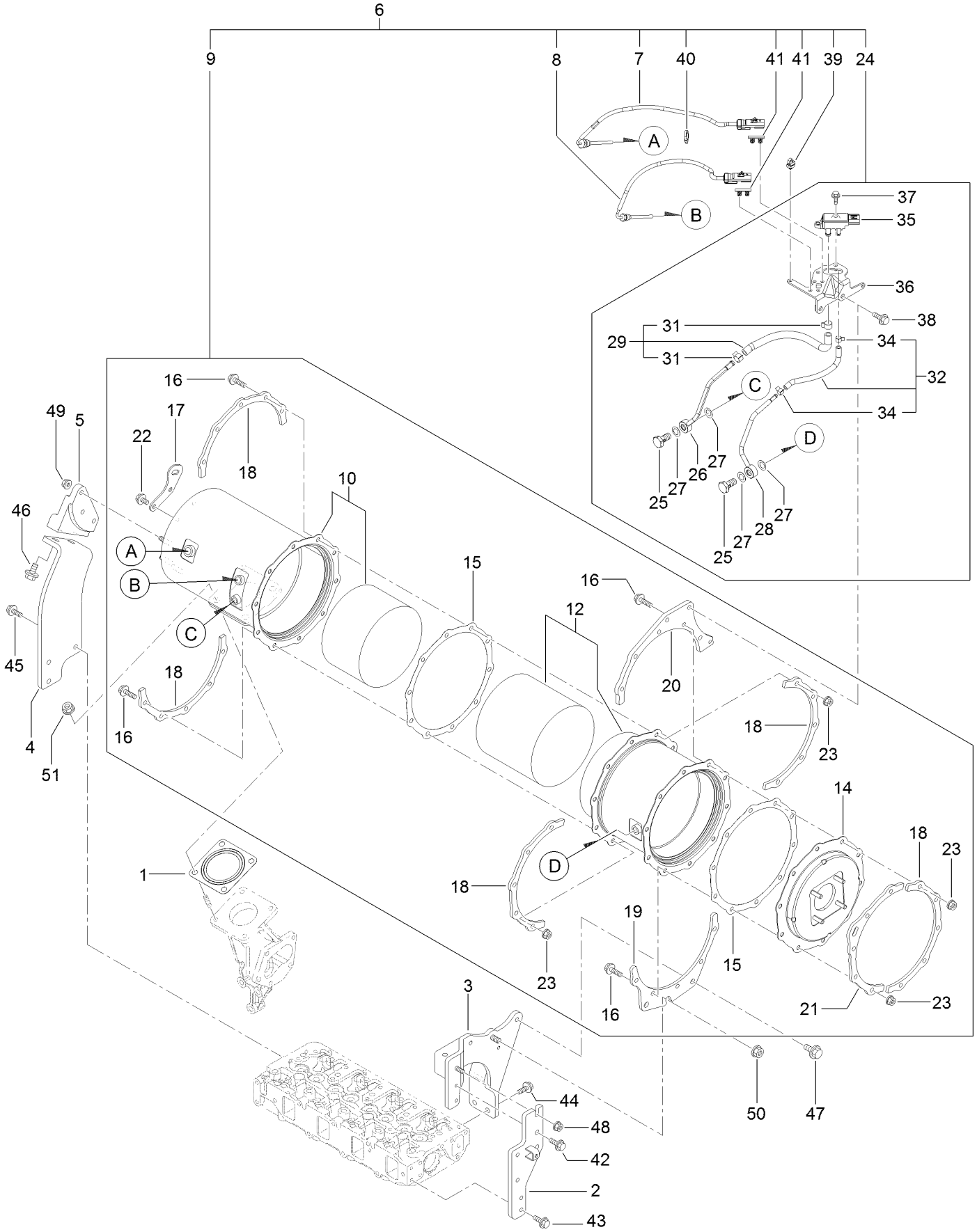

Diesel Particulate Filter Assembly (continued)

Ref.	Part Number	Qty.	Description
1	127-2987	1	Gasket-Silencer
2	127-3095	1	Stay-D P F
3	127-3148	1	Stay- D P F
4	127-3149	1	Stay-D P F
5	127-3150	1	Stay-D P F
6	127-3159	1	D P F Unit
7	127-3111	1	Sensor-Temp, Exhaust
8	127-3112	1	Sensor-Temp, Exhaust
9	127-3157	1	D P F ASM
10	127-3141	1	Case-Doc
12	127-3142	1	Case-Filter, Soot
14	127-3143	1	Flange-Outlet
15	127-3162	2	Gasket-D P F
16	127-3055	20	Bolt
17	127-3144	1	Lifter-D P F
18	127-3145	5	Stiffener-D P F, A
19	127-3146	1	Stiffener-D P F, B
20	127-3158	1	Stiffener-D P F, D
21	127-3147	1	Stiffener-D P F, C
22	125-7213	2	Bolt
23	125-7229	20	Nut
24	127-3163	1	Pressure Sensor Unit
25	127-3039	2	Bolt-Joint, Pipe
26	127-3164	1	Exhaust Pressure Pipe ASM

Ref.	Part Number	Qty.	Description
27	127-3056	4	Gasket-Sensor
28	127-3165	1	Exhaust Pressure Pipe ASM
29	127-3114	1	Exhaust Hose ASM
31	127-3057	2	Clip-Hose
32	127-3059	1	Exhaust Pressure Hose ASM
34	127-3058	2	Clip-Hose
35	127-3060	1	Sensor-Pressure
36	127-3061	1	Bracket-Sensor, Pressure
37	125-7208	2	Bolt
38	125-7595	2	Bolt
39	127-3087	1	Band-Clip
40	127-3124	1	Band
41	127-3088	2	Clip-Connnector
42	125-7595	2	Bolt
43	125-7595	2	Bolt
44	125-7595	2	Bolt
45	125-7595	3	Bolt
46	127-3179	2	Bolt
47	127-3179	2	Bolt
48	125-7229	1	Nut
49	125-7229	3	Nut
50	125-7230	1	Nut
51	125-7230	4	Nut

Gasket Set

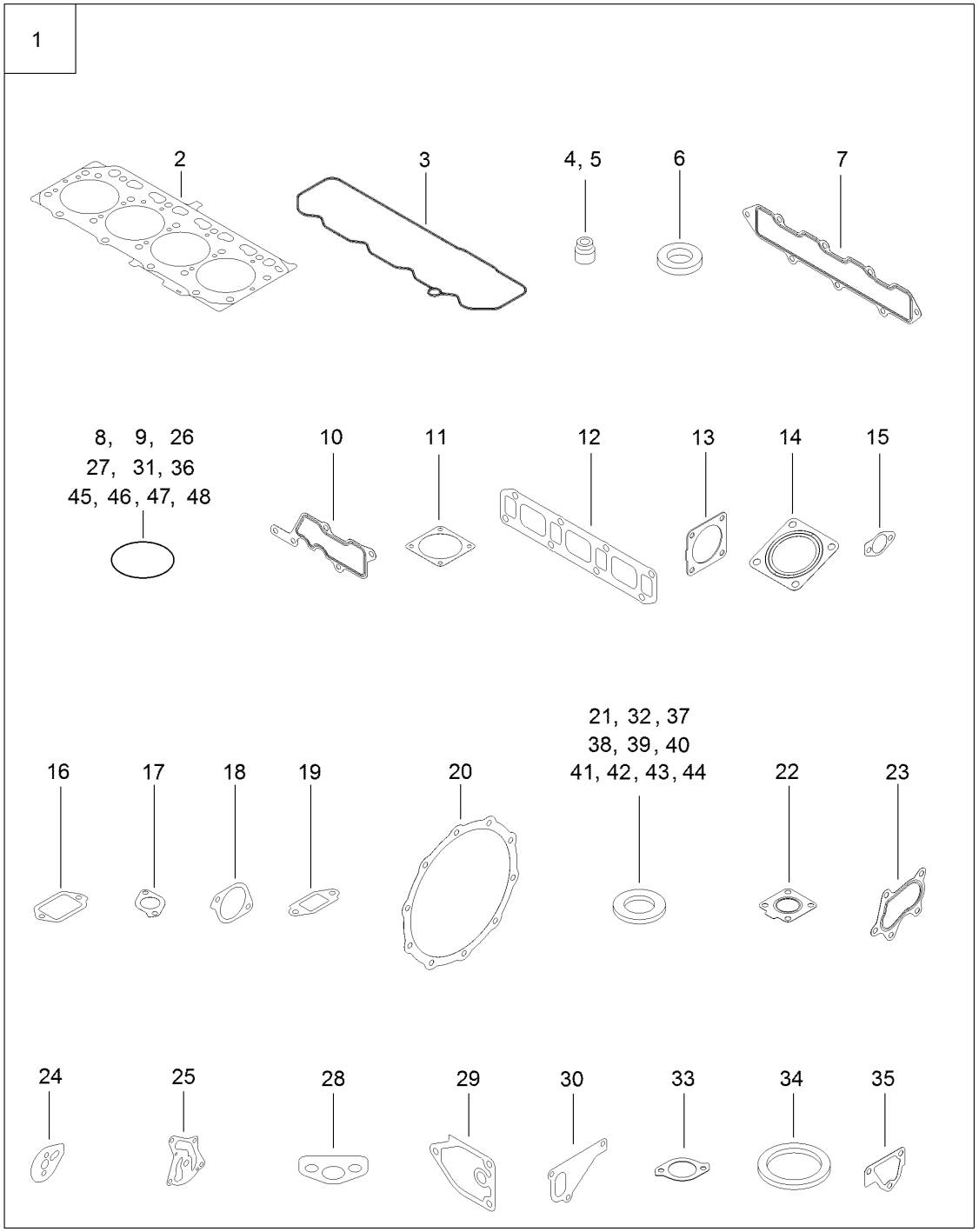
1
2
3
4, 5
6
7
8, 9, 26
27, 31, 36
45, 46, 47, 48
10
11
12
13
14
15
16
17
18
19
20
21, 32, 37
38, 39, 40
41, 42, 43, 44
22
23
24
25
28
29
30
33
34
35

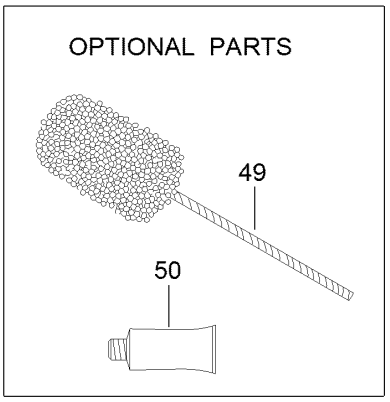
OPTIONAL PARTS
49
50

Gasket Set (continued)

Ref.	Part Number	Qty.	Description
1	127-3189	1	Gasket Kit
2	127-3126	1	Gasket-Head, Cylinder
3	127-3106	1	Gasket-Cover
4	127-2986	4	Seal-Stem, Valve
5	127-3027	4	Seal-Stem, Valve
6	127-3021	4	Gasket-Injector
7	127-3107	1	Gasket-Manifold, Intake
8	127-3032	2	O Ring-Sensor, Pressure
9	127-3033	1	O-Ring
10	127-3034	1	Gasket-Collector
11	127-3037	2	Gasket-Throttle
12	127-3108	1	Gasket-Manifold, Exhaust
13	127-3019	1	Gasket
14	127-2987	1	Gasket-Silencer
15	127-3043	2	Gasket-Cooler, E G R
16	127-3046	1	Gasket-E G R
17	127-3016	1	Gasket
18	127-3050	1	Gasket-Intake Valve, E G R
19	127-3051	1	Gasket-Out Valve, E G R
20	127-3162	2	Gasket-D P F
21	127-3056	4	Gasket-Sensor
22	125-7070	1	Gasket
23	125-7071	1	Gasket
24	127-3069	1	Gasket-Idle, Shaft B
25	127-3004	1	Gasket
26	125-6909	2	O-Ring
27	127-2973	1	O-Ring
28	125-7022	1	Gasket
29	125-7024	1	Gasket
30	125-7047	1	Gasket
31	125-7048	1	O-Ring
32	125-6979	1	Gasket
33	125-7110	1	Gasket
34	125-7026	1	Gasket
35	125-6978	1	Gasket
36	127-3074	1	O-Ring
37	125-7174	1	Washer-Seal
38	125-7175	2	Washer-Seal
39	125-7176	1	Washer-Seal
40	127-3166	2	Washer-Seal
41	125-7177	1	Washer-Seal
42	125-7192	1	Gasket
43	125-7193	2	Gasket
44	127-3174	2	Gasket
45	93-0418	3	O-Ring
46	125-7197	1	O-Ring
47	125-7198	1	O-Ring
48	127-3176	1	O-Ring
49	127-3000	1	Hone
50	125-7248	1	Gasket-Liquid

Attachments and Accessories

For 30636 Groundsmaster 4010 Rotary Mower

Product Name	Model/Part
Bumper Weight Assembly	106-4278-03
Blade-Atomic (21.75in)	107-0214-03
Premium All Season Hydraulic Fluid (55 Gallon Drum)	108-1177
Premium All Season Hydraulic Fluid (5 Gallon Pail)	108-1178
Atomic Blade Service Pack (7 Pack)	108-1450
Blade-Flat Sail (21.75in)	110-6115-03
Flat Blade Service Pack (7 Pack)	110-6130
MVP Blade Kit	117-2722
Backrest Extension Kit	119-7719
Large Seat Cover	120-5179
Premium Engine Oil 10w30 (55 Gallon Drum)	121-6392
Premium Engine Oil 10w30 (5 Gallon Pail)	121-6393
Premium Engine Oil 15w40 (55 Gallon Drum)	121-6394
Premium Engine Oil 15w40 (5 Gallon Pail)	121-6395
400 Hour MVP Kit	30408
Guardian Recycler Conversion Kit	30420
Leaf Mulcher Kit	30422
CE Kit	30453
Right-Hand Replacement Mower	30476
Left-Hand Replacement Mower	30477
CE Light Kit	30660
Beacon Kit	30661
License Plate Kit	30664
Blade (21.75in)	92-5608-03
8in Foam Filled Wheel ASM	93-5974

Notes:

Notes:

Notes:

TORO®

Count on it.