FORM NO.93-0891

TORO®

MODEL NO. 41119-50001 & UP
MODEL NO. 41020-50001 & UP
MODEL NO. 41021-50001 & UP
MODEL NO. 41128-50001 & UP
MODEL NO. 41120-50001 & UP

SET-UP AND PARTS CATALOG

MANUAL VALVE SPRAY SYSTEM
FOR THE MULTI-PRO™ 1100 VEHICLE

Refer to the illustrated Parts List for the details of parts used in assembling the Manual Valve Spray System.

NOTE: "Right", "Left", "Front", and "Rear" are referenced while seated in the operator's position.

TACHOMETER:

1. Remove four (4) 1/4" x 5/8" washer hd cap screws to remove the rear panel from the Steering Console.

2. Install the Tachometer to the right side of the Steering Column using two (2) #8 x 5/8" hex hd machine screws, lock washers, and hex nuts. See FIG.1.

3. Route the Tachometer Cable through the hole in the top of the Steering Console below the Tachometer and install Grommet into hole around Cable. See FIG. 1.

4. Install RPM to Speed Decal above Tachometer.

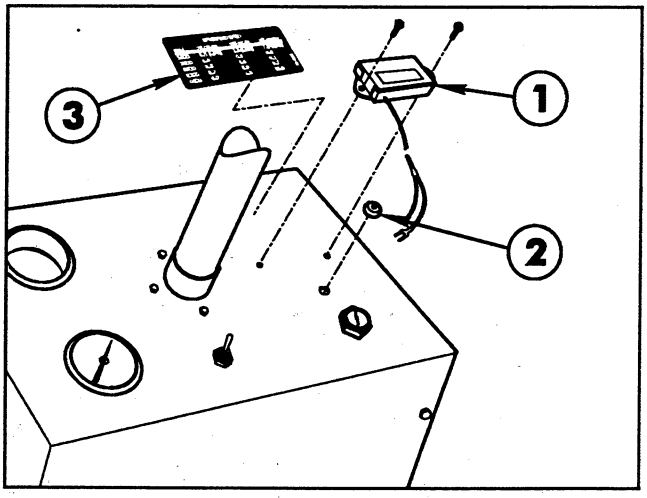

FIG. 1

1. Tachometer
2. Grommet
3. Decal

5. Route the Cable through the "U" shaped bracket under the floorboard, and up into the engine area to the right of the Transmission.

6. Slip red wire over an insulated section of the Spark Plug Wire and wrap 4 turns. See FIG. 2.

IMPORTANT: Keep wire clear of extremely hot engine parts such as the muffler, etc.

7. Ground the spade terminal on the white wire to the Ground Terminal Block mounted inside the Seat Box. After the connections are made, coil up any excess wire and tie strap to a convenient area. See FIG. 2.

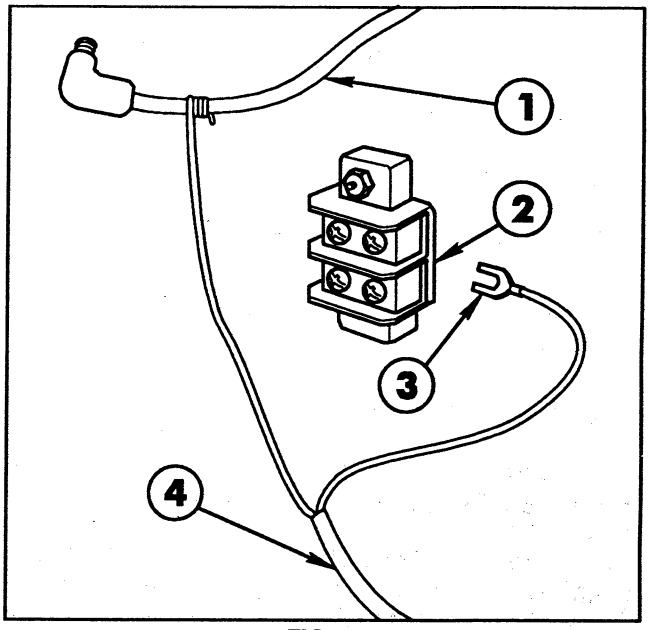

FIG. 2

1. Spark Plug Wire
2. Ground Terminal Block
3. Spade Terminal
4. Tachometer Cable

CONTROL VALVE:

1. Attach Control Valve/Mounting Bracket Assembly to left side of Seat Box using two (2) 1/4" x 5/8" hex washer hd machine screws. See FIG 3.

2. Remove top two (2) acorn nuts from right end of Control Valve. Attach Splash Shield to the end of Control Valve using two (2) previously removed acorn nuts. See FIG. 3.

3. Remove upper rear acorn nut from left end of Control Valve. Attach Shield Brace and secure with flat washer and previously removed acorn nut. Mount Shield Brace to Shield with 5/16" hex hd cap screw, flat washer, lock washer, and hex nut. See FIG 3.

©The Toro Company -1995
All Rights Reserved

4. Remove lower rear acorn nut from left end of Control Valve. Attach Valve Brace and secure with flat washer and previously removed acorn nut. Attach other end of Valve Brace to middle slot in rear of Seat Box with 5/16" hex hd cap screw, flat washer, lock washer, and hex nut. See FIG 3.

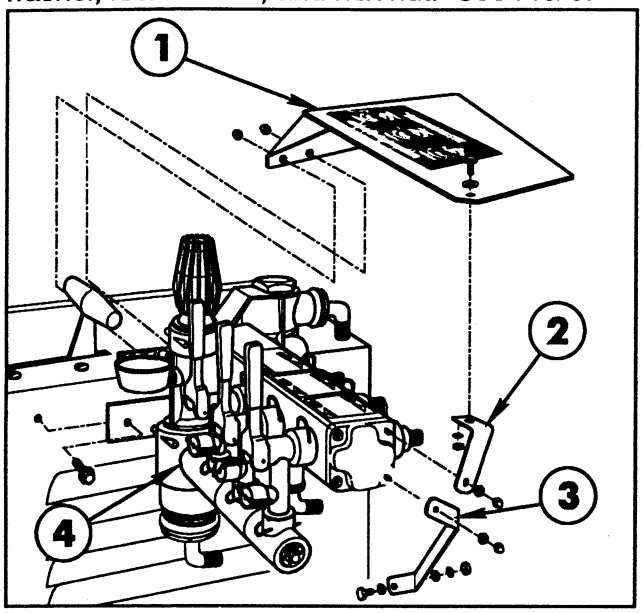

FIG. 3

1. Splash Shield
2. Shield Brace
3. Valve Brace
4. Control Valve/Mounting Bracket Assembly

CENTRIFUGAL PUMP:

IMPORTANT! If the optional Rollover Protection Structure (ROPS) is to be installed on the Vehicle, it must be installed prior to installing the Centrifugal Pump. See the Installation Instructions furnished with the ROPS (model no. 41185); or the ROPS Adaptor Kit (part no. 92-8240).

1. Mount the Pivot Mounting Plate to the angle on the bottom of the Vehicle Frame, using two 1/2" x 1-1/4" cap screws and lock nuts. See FIG. 4.

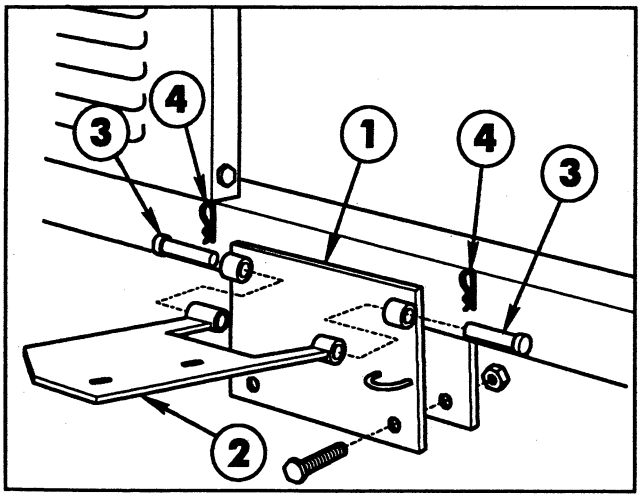

FIG. 4

1. Pivot Mounting Plate
2. Pump Pivot Plate
3. Clevis Pin
4. Hair Pin Cotter

2. Align the pivot tubes on the Pump Pivot Plate with those on the Pivot Mounting Plate. Insert the two (2) clevis pins and secure with two (2) hairpin cotters.

NOTE: In the following instructions, "sealer" refers to RTV clear silicone.

3. Secure the Centrifugal Pump in a vise. Apply thread sealer and install the fittings to connect the Suction, Supply, and Agitator Hoses to the Pump as shown in FIG. 5.

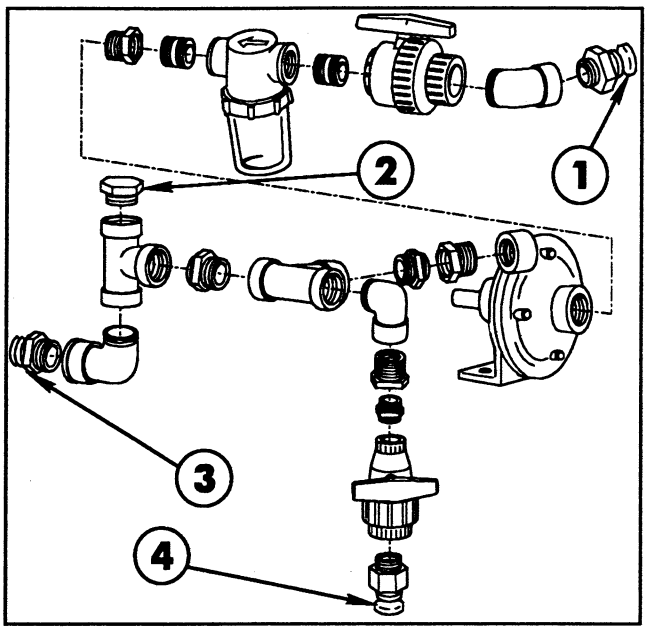

FIG. 5

1. Suction
2. Accessory
3. Supply
4. Agitator

4. Assemble the Pump Drive Pulley onto the Pump shaft with the Pulley's **hub** facing **away** from the Pump.

5. Assemble the Centrifugal Pump and the Spring Mounting Angle to the Pump Pivot Plate, using two (2) 3/8" x 1-1/2" cap screws, flat washers, and lock nuts as shown in FIG 6.

6. Using a straight edge as a guide, position the Pump Pulley so that it is in alignment with the Engine's Drive Pulley. When alignment is correct, tighten the two (2) set screws in the Pump Pulley's hub.

7. Install the Pump Drive Belt around the Pump and Engine drive Pulley.

8. Loosely mount the Pump Belt Cover to the Pump hub with the Pump Cover Clamp and the two (2) 5/16" flat washers, lock washers, and hex nuts. See FIG 6.

9. Insert the 3/8" x 4" cap screw through the Pump Cover and into the hole in the Pump Cable's end fitting. Secure the Cable to the Cover with a 3/8" lock nut.

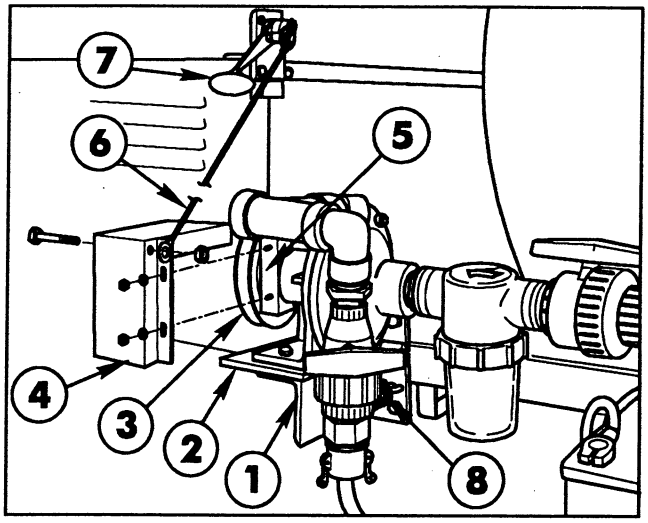

FIG. 6

1. Spring Mounting Angle
2. Pump Pivot Plate
3. Pump Pulley
4. Pump Belt Cover
5. Pump Cover Clamp
6. Pump Cable
7. Accessory Control Lever
8. Pump Spring

10. Remove the hair pin cotter and flat washer from the pin in the Accessory Control Lever. Push the Control Lever down (engaged). Slide the unattached end of the Cable onto the pin and secure with the flat washer and hair pin cotter previously removed.

11. Connect one end of the Pump Spring to the ring on the Pump Pivot Plate and the other end through the hole on the Spring Mounting Angle.

12. Engage the Accessory Control Lever...DO NOT START ENGINE! Adjust the Belt Guide to obtain 1/8" clearance between the inside of the Guide and the Belt.

13. Rotate the Belt Cover around the Pump hub until the tension on the Pump Control Cable requires a small amount of pressure to snap the Control lever "over-center" to disengage the Pump drive. Make sure there is 1/8" clearance between the Belt and the inside of the Belt Cover. Tighten the lock nuts after adjustment is complete.

If step 13 does not achieve the necessary tension on the Control Cable, loosen the Pump mounting bolts and slide the Pump on the Pivot Plate away from the Vehicle Frame, increasing the Cable tension.

TANK ASSEMBLY:

1. Cut the shipping straps and remove the Spray Tank and Saddle Assembly from the shipping skid.

NOTE: In the following instructions, sealer refers to RTV clear silicone when used for pipe fittings.

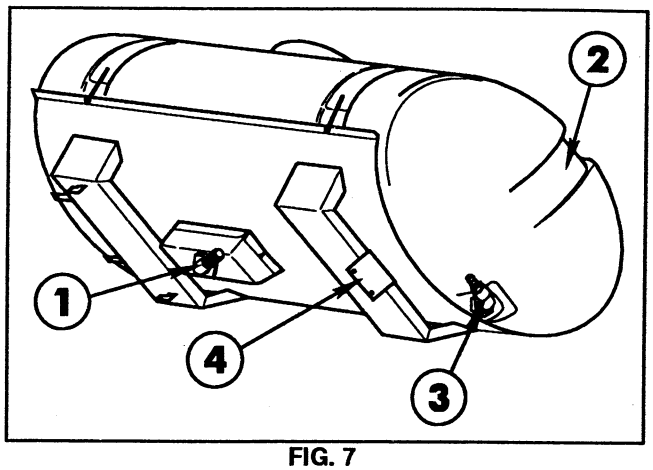

FIG. 7

1. Barbed Elbow (Suction)
2. Spillway
3. Elbow & Hose Barb (Overflow)
4. Mounting Member

2. Apply thread sealer and install the 90° barbed elbow into the bottom of the Spray Tank.

3. Attach 1-1/4" x 25" Suction Hose to the barbed elbow in the bottom of the Tank with a hose clamp. Attach 1-1/4" barbed female quick coupler to the other end of the Suction Hose and secure with a hose clamp.

4. Attach 1/2" x 42" Agitator Hose to the 1/2" barbed elbow in the front of the Tank with a hose clamp. Attach 1/2" barbed female quick coupler to the other end of the Agitator Hose and secure with a hose clamp.

5. Apply thread sealer and install the 90° street elbow and a hose barb into the fitting at the rear ("spillway") of the Tank. Attach 1-1/4" x 67" Overflow Hose to the hose barb with a hose clamp.

6. Place the Tank and Saddle Assembly on the Vehicle Frame.

7. Slide the Tank and Saddle forward, to hook the two lugs on the front of Saddle under the Vehicle's cross member, resting the angle under the rear Saddle over the Vehicle's rear cross member.

8. Secure the Mounting Member to the Vehicle's cross member with two (2) 1/2" x 1-1/2" cap screws, flat washers, lock washers and hex nuts.

9. Remove hex nut and flat washer securing Front Tank Band to left side of saddle. Install 3/8" hex nut and flat washer and reinstall Tank Band to Saddle with previously removed fasteners. Mount the Tee Mounting Bracket to the left side of the saddle at the front Tank Band, using 5/16" flat washer and hex nut, previously installed, as shown in FIG 8.

10. Apply thread sealer and install two Hose

Barbs and 90° Hose Barb to Tee. Attach Tee to Mounting Bracket using clamp, two (2) 5/16" flat washers, lock washers, and hex nuts. Connect 1-1/4" x 67" Overflow Hose from rear of Tank and two 1-1/4" x 27 -1/2" Bypass Hoses to Tee, and secure with hose clamps.

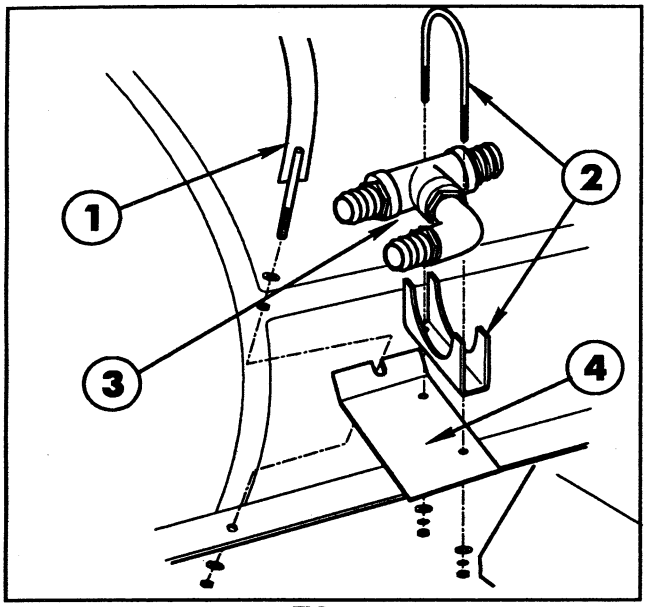

FIG. 8

1. Tank Band
2. Clamp
3. Tee
4. Tee Mounting Bracket

11. Connect two (2) 1-1/4" x 27-1/2" Bypass Hoses to Control Valve. Secure with hose clamps. Route the Suction Hose over the left side of the Vehicle Frame and connect the couplers at the Suction Ball Valve.

12. Route the Agitator Hose over the Vehicle frame and under the Pump to connect the couplers at the Agitator Ball Valve.

13. Slip Hose Cover over 1" x 24" Supply Hose and attach to 90° hose barb on the Control Valve, and connect the other end to the Hose Barb at the discharge of the Pump, using hose clamps.

BOOM HOLD-IN ASSEMBLY:

1. Mount right Hold-In Brace assembly to the two (2) 5/16" carriage bolts in the front Tank Band using two (2) 5/16" flat washers and hex nuts. Tighten securely. See FIG. 9.

2. Attach right Boom Hold-In assembly to Hold-In Brace assembly using two (2) 1/4" U-bolts and four (4) 1/4" lock nuts. Attach Rubber Hold-Down to Hold-In Brace assembly. Repeat steps 1 and 2 for left side.

3. Mount Wash Tank Bracket (open end forward) to right-hand Hold-In Brace assembly using two (2) 5/16" x 1" hex hd. cap screws, flat washers, and hex nuts. Place Clean Water Wash Tank into Wash Tank Bracket and secure with Rubber Hold-Down, as shown in FIG. 9.

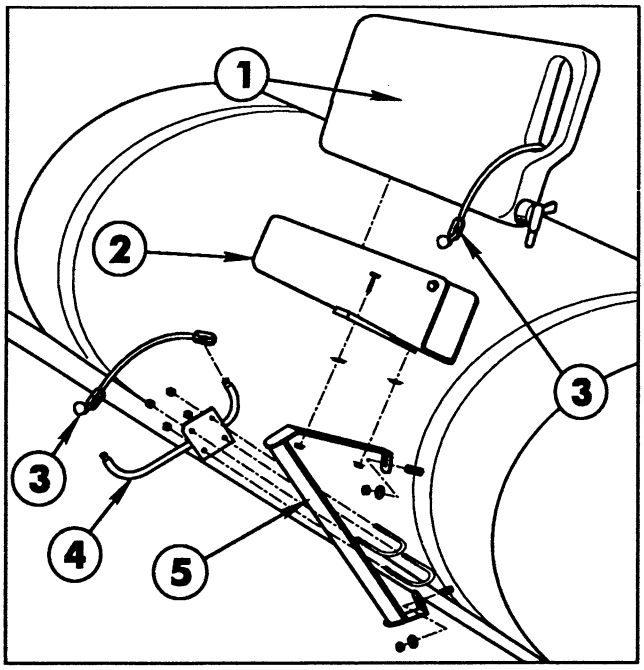

FIG. 9

1. Clean Water Wash Tank
2. Wash Tank Bracket
3. Rubber Hold-Down
4. Boom Hold-In Ass'y
5. Hold-In Brace Ass'y

BOOM FRAME ASSEMBLY:

1. Apply a heavy coating of grease to the tubes of the two Boom Mount Assemblies and insert them into the Vehicle frame as shown in FIG 10.

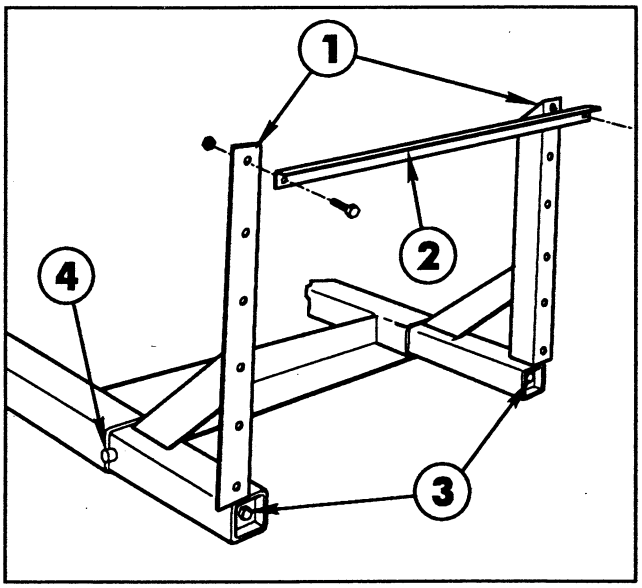

FIG. 10

1. Boom Mount Assembly
2. Cross Support Angle
3. Wedge Screw
4. Stop Pin

NOTE: Note the position of the angle member of the Boom Mount Assemblies in relation to the tube member. They must be positioned as shown for the mounting of the Cross Support Angle.

Steps 2 and 3 apply to the assembly of the Standard Boom only. If the optional "Boom Pivot Kit" is to be installed, see the instructions furnished with that kit. The Cross Support to be used with that kit is different than the Support used on the Standard Boom.

2. Position the Cross Support Angle and attach it to the Boom Mount Assemblies with two 1/2" x 1-1/4" hex hd cap screws and lock nuts.

3. Position the Spacer Tubes between the Boom Mount uprights and the lugs on the Main Frame Tube. Use two 1/2" x 4" hex hd cap screws and lock nuts to secure the Main Frame Tube to the uprights. See FIG. 11.

4. Using a torque wrench, tighten the 1/2" x 18" screws that join the Wedges to the Boom Mounts. Tighten to 50 ft. lbs.

5. Position the two (2) Center Boom angles on the Main Frame and secure them to the Main Frame tube with two (2) square U- bolts, four (4) flat washers and hex nuts. See FIG 11.

6. Center and attach the Center Boom Pipe to the two Center Boom Angles with two (2) clamps, 3/8" x 1" cap screws, flat washers and lock nuts.

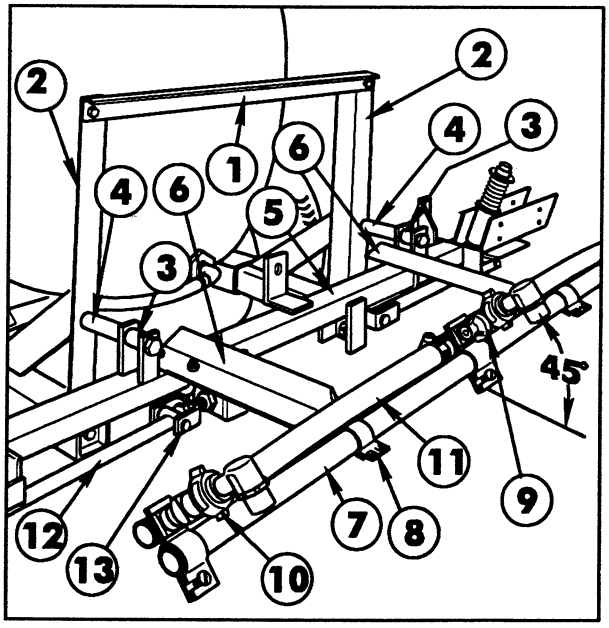

FIG. 11

1. Cross Support Angle
2. Boom Mount Assy.
3. Spacer Tube, 1" lg.
4. Spacer Tube, 1-1/4" lg.
5. Main Frame Tube
6. Center Boom Angle
7. Center Boom Pipe
8. Boom Clamp
9. Triple Barb Nozzle Body
10. Single Barb Nozzle Body
11. Jumper Hose
12. Strut Assembly
13. Adjustable Clevis

7. Loosely attach the triple barb Nozzle Assembly in the approximate center of the Center Boom Pipe. For the most uniform spray coverage, position all Nozzle Assemblies at a 45° angle as shown in FIG 11. Tighten clamp screw to secure the Nozzle Body to the Boom Pipe.

8. Loosely attach a single barb Nozzle Assembly to each end of the Center Boom Pipe. Place two hose clamps on the two 3/4" x 19" Jumper Hoses and connect the single barb Nozzles to the triple barb Nozzle. Tighten all fasteners securely.

9. Attach the two Strut Assemblies to the two Adjustable clevis' found on each side of the Main Frame tube with two (2) 1/2" x 2" clevis pins and two (2) 1/8" x 1" cotter pins.

10. Insert the plugged end of an Extension Boom Pipe into the Pivot Assembly and secure with four (4) 1/4" x 1-1/4" cap screws and lock nuts. See FIG 12. Repeat on the opposite side to assemble the other Extension Boom.

IMPORTANT! DO NOT over-tighten the nuts in steps 10 and 12. The clamping action could crush the Boom Pipe.

11. Attach the Boom Support Assembly to the Pivot Assembly, using a 5/16" x 1-1/2" cap screw and lock nut. See FIG 12.

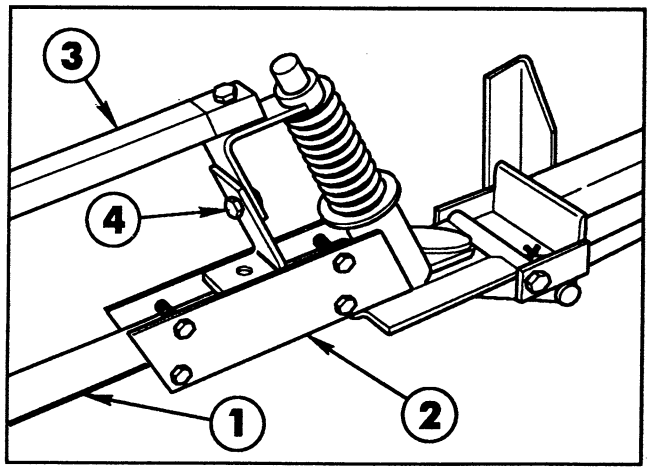

FIG. 12

1. Extension Boom Pipe
2. Pivot Assembly
3. Boom Support Assembly
4. Height Adjustment

12. Secure the two plates of the Boom Support Assembly to one of the Extension Boom Pipes, using two (2) 1/4" U-bolts, four (4) lock nuts and flat washers. See FIG 13.

13. Assemble the Boom Support Assembly to the other Extension Boom Pipe.

14. Adjust the Booms to a level position by adjusting the jam nuts on the adjustable clevis assemblies (See FIG. 11) to the desired position, then tighten the end nuts against the Main Frame Plate.

15. Attach three double barb and one single barb Nozzle Assemblies on each Extension Boom Pipe as shown in FIG 13. Nozzles are to be spaced on 20 inch centers. Connect the Nozzle Assemblies with the 3/4" x 19" Jumper Hoses. Secure with hose clamps.

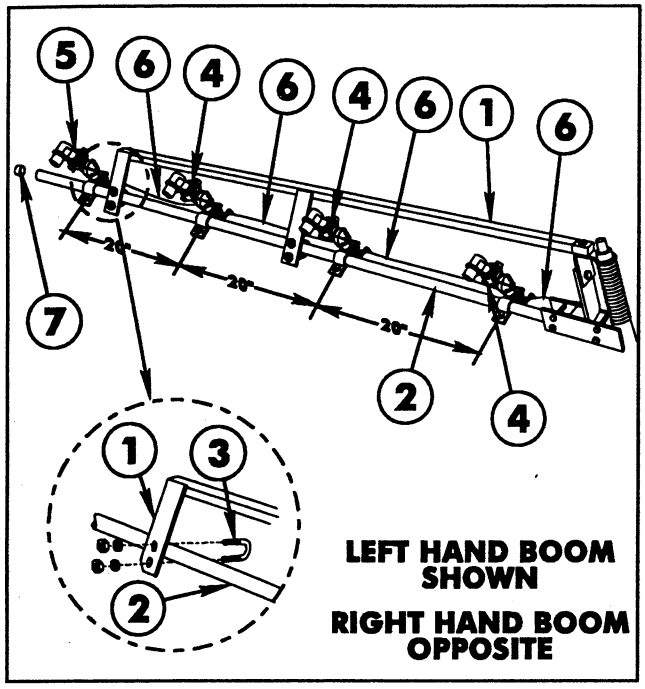

FIG. 13

1. Boom Support Assembly
2. Extension Boom Pipe
3. U-bolt
4. Double Barb Nozzle Body
5. Single Barb Nozzle Body
6. Jumper Hose
7. Boom cap

16. Install the plastic Boom Caps over the ends of the Boom Pipes.

17. Slip Hose Cover over three Boom Feeder Hoses, and connect the Boom Feeder Hoses to the barbs in the Control Valve. The two 3/4" x 104" Hoses are to be attached to the left and center barbs. The 3/4" x 124" Hose is to be attached to the right barb. Secure the hoses and Hose Cover to Control Valve with hose clamps.

18. Place a hose clamp on the Center Boom Feeder Hose and attach it to the triple barb Nozzle Body on the Center Boom Pipe.

19. Place a hose clamp on the right and left Boom Feeder Hoses and attach them to the double barb Nozzle Bodies on the right and left Extension Boom Pipes.

20. Recheck and tighten all fasteners and hose clamps securely.

Fill the Tank with clean water and check for any leaks.

Refer to the Manual Valve Spray System Operator's Manual for the proper calibration and operation of the Manual Valve Spray System.

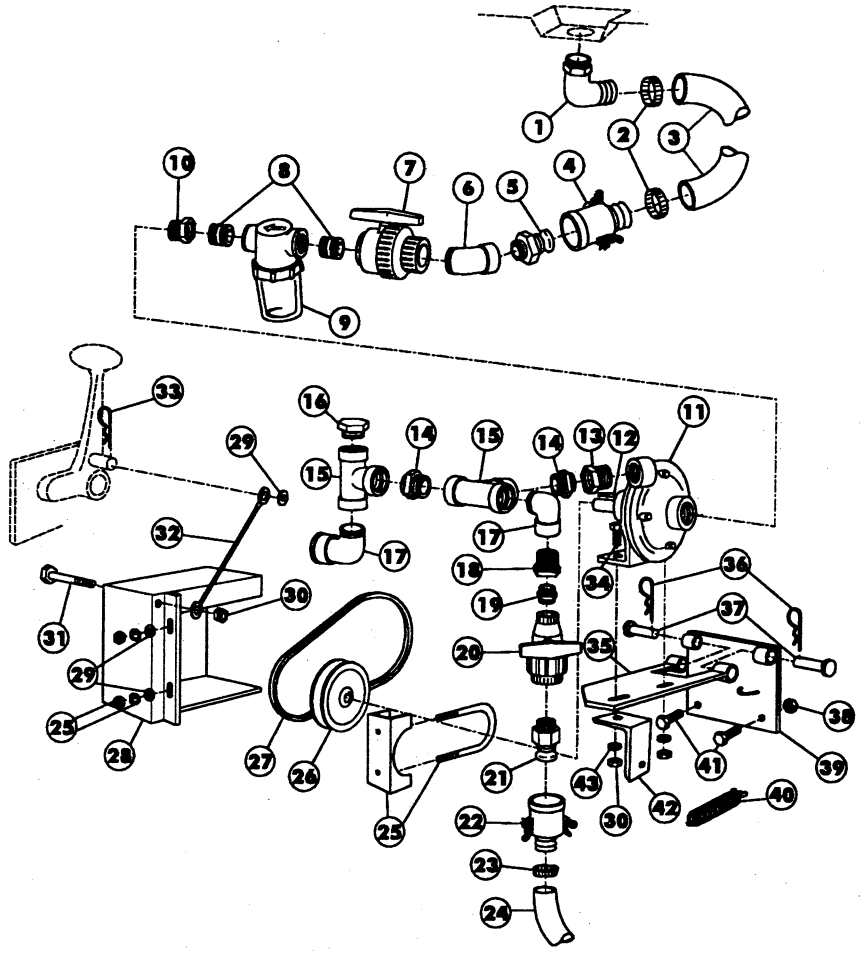

MANUAL VALVE SPRAY SYSTEM PUMP SET-UP

Ref	Part No.	Description	Qty
1	93-0856	90° Elbow 1-1/4 NPT	1
2	41327	Hose Clamp	2
3	93-0858	Suction Hose 1-1/4 x 25	1
4	93-0854	Quick Coupler x 1-1/4 Hose Barb	1
5	93-0888	Quick Barb x 1-1/4 Male NPT	1
	93-0853	Quick Coupling Dust Cap	1
6	93-0897	St. Elbow 1-1/4 NPT x 45°	1
7	93-0855	Ball Valve, x 1-1/4 NPT	1
8	92-0050	Close Nipple, 1-1/4 NPT	2
9	42701	Suction Strainer	1
	42702	St. Screen (f/w 42701)	1
	42703	St. Gasket (f/w 42701)	1
10	42056	Red. Bushing, 1-1/4 x 1-1/2 NPT	1
11	93-0848	Centrifugal Pump (See Page 16)	1
12	92-0049	Square Key	1
13	92-0052	Reducing Bushing 1-1/4 x 1 NPT	1
14	41304	Close Nipple	2
15	41305	Tee	2
16	41315	Hex Plug	1
17	41307	90° St. Elbow	2
18	41306	Reducing Bushing 1 x 1/2 NPT	1
19	41314	Close Nipple	1
20	40192	1/2 NPT Ball Valve	1

Ref	Part No.	Description	Qty
21	40486	Quick Barb x 1/2 Male NPT	1
	41317	Quick Coupler Dust Cap	1
22	40487	Quick Coupler x 1/2 Hose Barb	1
23	96609	Hose Clamp	2
24	42946	Agitator Hose	1
25	20-4840	Muffler Clamp	1
26	40198	Pump Sheave	1
27	42989	Pump Drive Belt	1
28	41142	Pump Belt Cover Assy.	1
29	24-11-BD	Flat Washer, 3/8 SAE	3
30	22-13-AJFD	Lock Nut, 3/8 UNC	3
31	20-59-AGD	HHCS, 3/8 UNC x 4	1
32	42993	Pump Cable	1
33	328963	Hair Pin	1
34	20-49-AGD	HHCS, 3/8 NC x 1-1/2	2
35	92-3771	Pump Pivot Plate Assy.	1
36	328967	Cotter Hair Pin	2
37	42195	Clevis Pin	2
38	22-15-AJFD	Lock Nut, 1/2 NC	2
39	92-3782	Pivot Mount Plate Assy.	1
40	41721	Pump Spring	1
41	20-86-AGD	HHCS, 1/2 NC x 1-1/4	2
42	41720	Spring Mounting Angle	1
43	24-11-AD	Flat Washer, 3/8 USS	2

MANUAL VALVE SPRAYER CONTROL

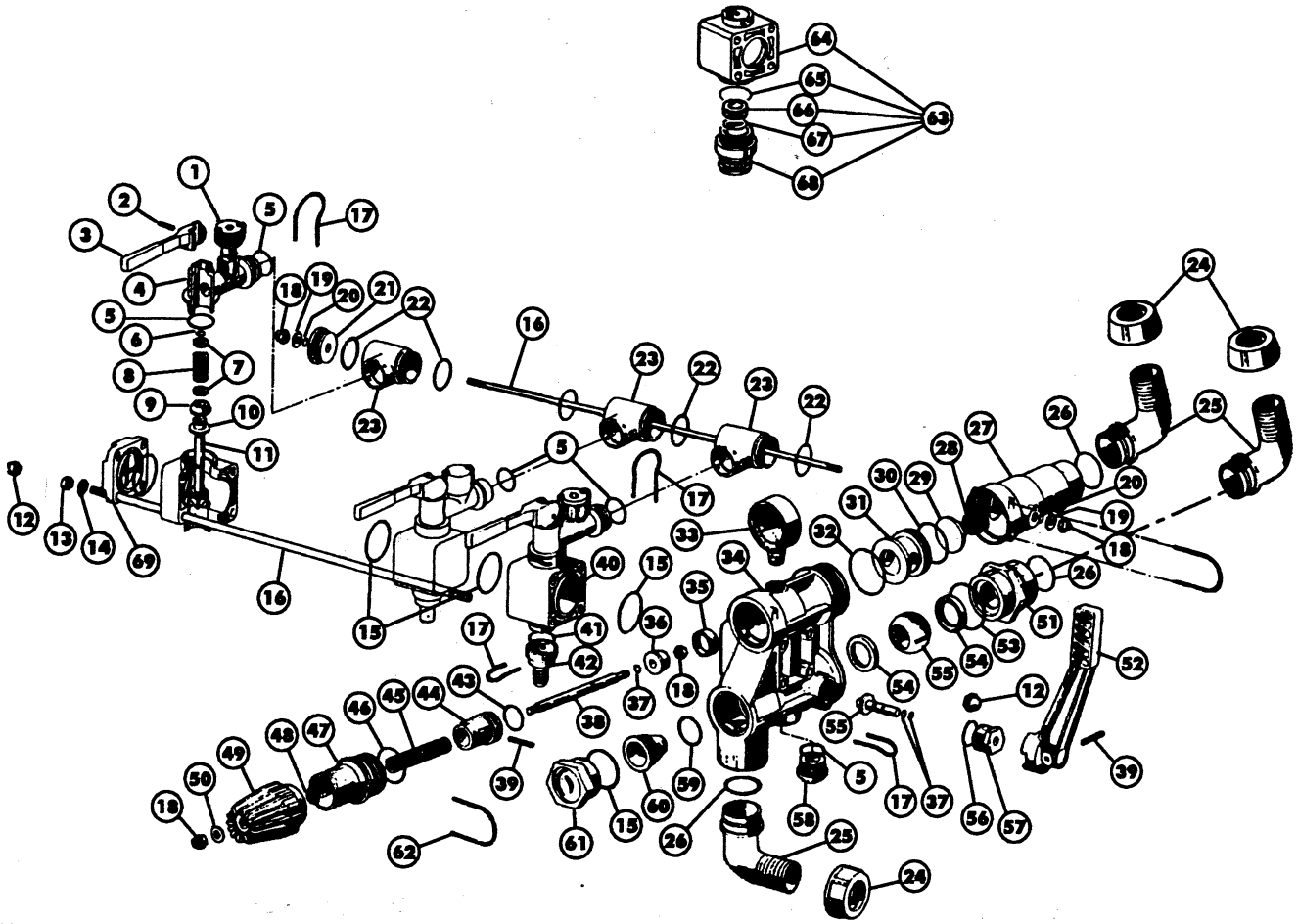

TACHOMETER

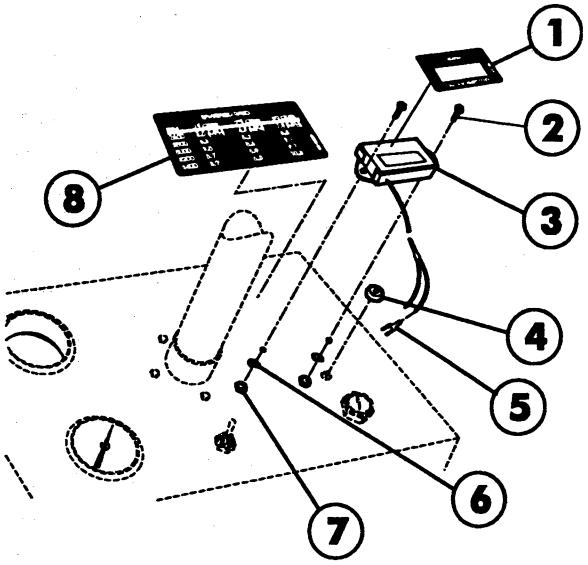

MANUAL VALVE SPRAYER CONTROL

Ref	Part No.	Description	Qty
1	93-0940	Adjustment Knob	3
2	93-0941	Pin Dia. 4 x 20	3
3	93-0942	Lever	3
4	93-0943	Upper Valve Body	3
5	93-0944	O-Ring Dia. 3 x 22	7
6	93-0945	O-Ring 1, 78 x 7.66	3
7	93-0946	Washer Dia. 8.2	6
8	93-0947	Spring	3
9	93-0948	Seal	3
10	93-0949	Washer	3
11	93-0950	Poppet w/ Rod	3
12	93-0990	Cap Nut M8 x 1.25	8
13	93-0991	Nut M8	4
14	93-0992	Washer Dia. 10	4
15	93-0996	O-Ring 2.62 x 39.34	5
16	93-0997	Stay Rod M8 for 3 Valves	4
17	93-0952	Quick Release Pin	7
18	93-0953	Cap Nut M6 x 1	4
19	93-0954	Washer Dia. 6.4 x 18 x 1.5	2
20	93-0955	O-Ring 3 x 16	2
21	93-0956	Drain Plug	1
22	93-0957	O-Ring Dia. 2.66 x 28.25	4
23	93-0959	Bypass Connector	3
24	93-0960	Wing Nut G1 1/2	3
25	93-0961	90° Elbow Connector	3
26	93-0962	O-Ring Dia. 3 x 30	4
27	93-0963	Bypass Connector	1
28	93-0964	Spring	1
29	93-0965	Check Valve	1
30	93-0966	O-Ring 3.53 x 39.69	1
31	93-0967	Check Valve Seat	1
32	93-0968	O-Ring	1
33	40485	Pressure Gauge	1
34	93-0972	Control Unit Body	1
35	93-0973	Volumetric Valve Seat	1

Ref	Part No.	Description	Qty
36	93-0975	Valve	1
37	93-0976	Viton O-Ring Dia. 1.78 x 6.75	3
38	93-0977	Volumetric Valve Rod	1
39	93-0978	Spring Pin Dia. 5 x 24	2
40	93-0971	Outlet Valve Ass'y	3
41	93-0979	O-Ring Dia. 2.62 x 22.22	3
42	93-0980	Pipe Fitting Dia. 20	3
43	93-0982	O-Ring 4093	1
44	93-0983	Volumetric Valve Guide	1
45	93-0984	Volumetric Valve Spring	1
46	93-0985	O-Ring	1
47	93-0986	Volumetric Valve Body	1
48	93-0987	Washer	1
49	93-0988	Adjusting Knob	1
50	93-0989	Washer Dia. 6.4 x 18 x 1.5	1
51	93-1011	Nipples	1
52	93-1007	Control Unit Lever	1
53	93-1010	O-Ring 2.62 x 44.12	1
54	93-1008	Teflon Packing 24 x 33	2
55	93-1009	Chromium Plated Brass Ball Dia. 39	1
56	93-1005	O-Ring 2.62 x 18.72	1
57	93-1006	Connector for Lever Pin	1
58	93-1003	Guide Plug	1
59	93-1001	O-Ring 2.62 x 29.82	1
60	93-1000	Nozzle Dia. 12 (GPM 40/53) Yellow	1
61	93-0999	Plug 1-1/4" w/ Gasket	1
62	93-0998	Circlips	1
63	93-0995	Valve Section Body	3
64	93-1017	The Body	3
65	93-1016	O-Ring 2.62 x 23.81	3
66	93-1015	Stainless Steel Seat	3
67	93-1014	O-Ring 2.62 x 18.72	3
68	93-1013	Nipples	3
69	93-0994	Tap Cover	1

TACHOMETER

Ref	Part No.	Description	Qty
1	93-1021	Tachometer Decal	1
2	3250-4	HHMS #8-32UNC x 5/8"	2
3	93-1022	Tachometer	1
4	93-1086	Grommet	1

Ref	Part No.	Description	Qty
5	93-1091	Spade Terminal	1
6	23 7 GD	Lock washer #8	2
7	22 8 AJD	Hex nut #8-32UNC	2
8	93-0920	RPM to Speed Decal	1

MANUAL SPRAY SYSTEM TANK (MULTI-PRO 100)

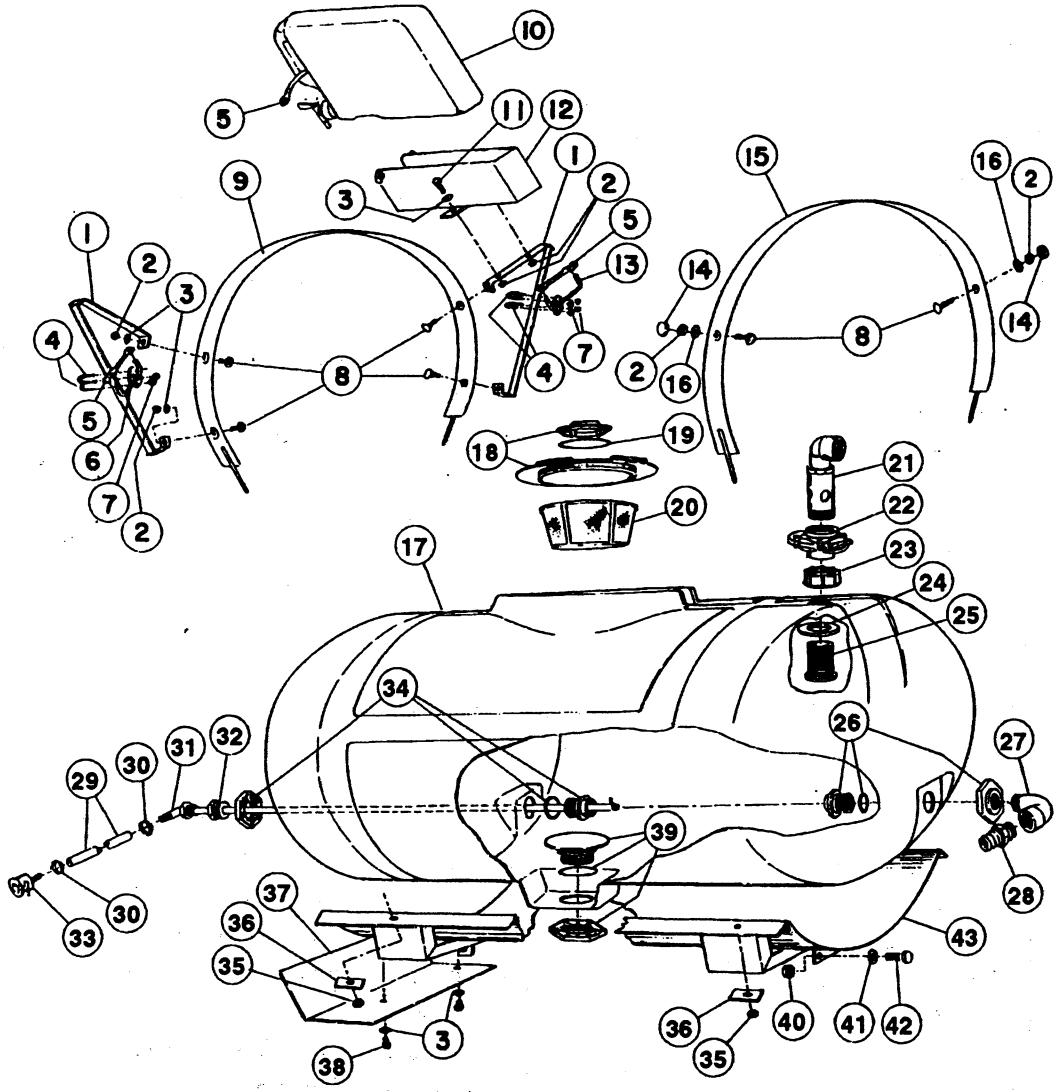

MANUAL VALVE MOUNTING ASS'Y(MULTI-PRO 100)

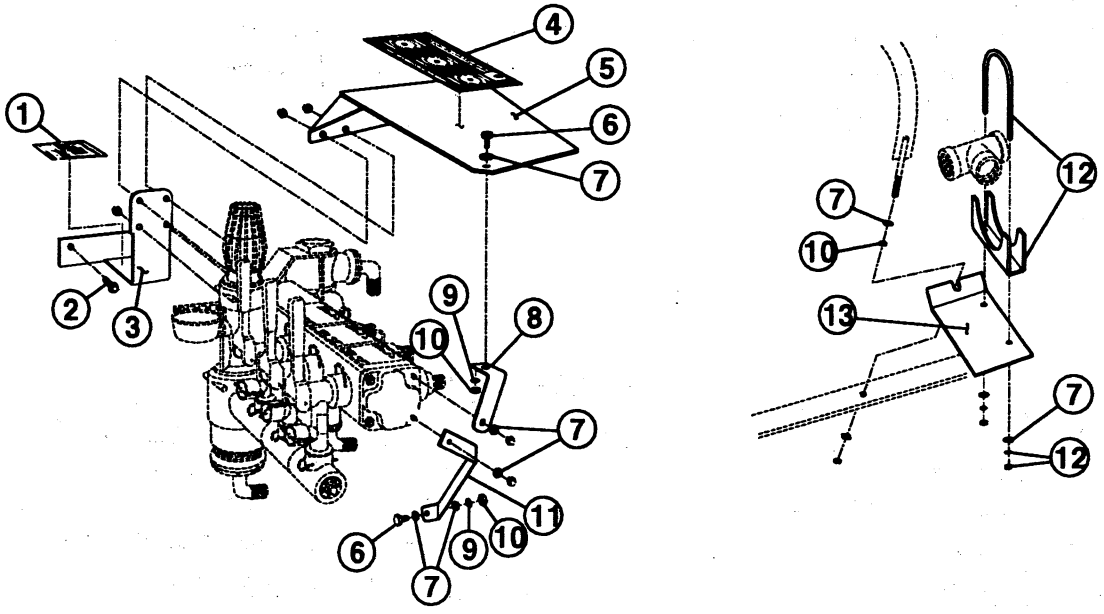

MANUAL SPRAY SYSTEM TANK (MULTI-PRO 1100)

Ref	Part No.	Description	Qty
1	42983	Hold-In Brace Assembly	2
2	22-12-AJD	Hex Nut, 5/16 NC	6
3	24-10-BD	Flat Washer, 5/16	4
4	92-0010	U-Bolt, 1/4 NC	4
5	42198	Rubber Hold-Down	3
6	42259	Boom Hold-In Assembly (left)	1
7	22-11-AJFD	Lock Nut, 1/4 NC	8
8	25-25-AGD	Carriage Bolt, 5/16 NC x 3/4	6
9	42880	Tank Band Assembly (front)	1
10	92-3976	Clean Water Wash Tank	1
	93-0828	Spigot (f/w 92-3976 Tank)	1
11	20-26-AGD	HHCS, 5/16 NC x 1"	2
12	92-3969	Wash Tank Bracket	1
13	42316	Boom Hold-In Assembly (right)	1
14	42452	Protective Cap	2
15	43013	Tank Band Assembly (rear)	1
16	23-10-GD	Lock Washer, 5/16	2
17	42879	Tank Assembly - 160 Gals.	1
18	42322	Tank Lid (f/w Tank Assy.)	1
	92-3765	Vent Cap	1
19	42859	Breather Gasket (f/w Tank Assy.)	1
20	42323	Filler Basket (f/w Tank Assy.)	1
21	43069	Stand Up Assembly	1
22	43064	Knife Valve	1

Ref	Part No.	Description	Qty
23	43068	Fly Nut, 2" NPT	1
24	43067	Sealing Washer	1
25	43066	Bulk Head, 2" NPT	1
26	41800	Tank Fitting, 1" NPT (f/w Tank Assy)	1
27	41307	90° St. Elbow, 1" NPT	1
28	41308	Hose Coupling, 1" MPT x 1-1/4" HB	1
29	42946	Agitator Hose, 1/2" x 42"	1
30	96609	Hose Clamp	2
31	42981	Agitator Tube Assembly	1
	42842	Barbed Elbow	1
32	41969	Reducer Bushing, 3/4" MPT x 1/2" FPT	1
33	40487	Female Quick Coupler, 1/2" HB	1
34	41801	Tank Fitting, 3/4" NPT (f/w Tank Assy)	1
35	22-13-AJD	Hex Nut, 3/8" NC	4
36	43014	Backing Strap	4
37	92-3525	Heat Shield	1
38	20-24-AGD	HHCS, 5/16 NC x 3/4	2
39	41798	Anti Vortex Fitting, 1-1/4" NPT	1
40	22-15-AJD	Hex Nut, 1/2" NC	2
41	23-13-GD	Lock Washer, 1/2"	2
42	20-86-AGD	HHCS, 1/2 NC x 1-1/4"	2
43	42878	Tank Saddle Assembly	1

MANUAL VALVE MOUNTING ASS'Y

Ref	Part No.	Description	Qty
1	93-0932	Main Control Decal	1
2	34-140-AMVD	HWHMS, 1/4 NC x 5/8"	2
3	93-0878	Valve Mtg. Bracket Ass'y	1
4	93-1074	Pressure Adjust Decal	1
5	93-1085	Spray Guard Ass'y	1
6	20-24-AGD	HHCS, 5/16" NC x 3/4"	2
7	24-10-BD	Flat Washer, 5/16"	8

Ref	Part No.	Description	Qty
8	93-1076	Shield Brace	1
9	23-10-GD	Lock Washer, 5/16"	2
10	22-12-AJD	Hex Nut, 5/16 NC	2
11	93-0879	Valve Brace	1
12	20-4840	Clamp	1
13	93-0880	Tee Mtg. Bracket	1

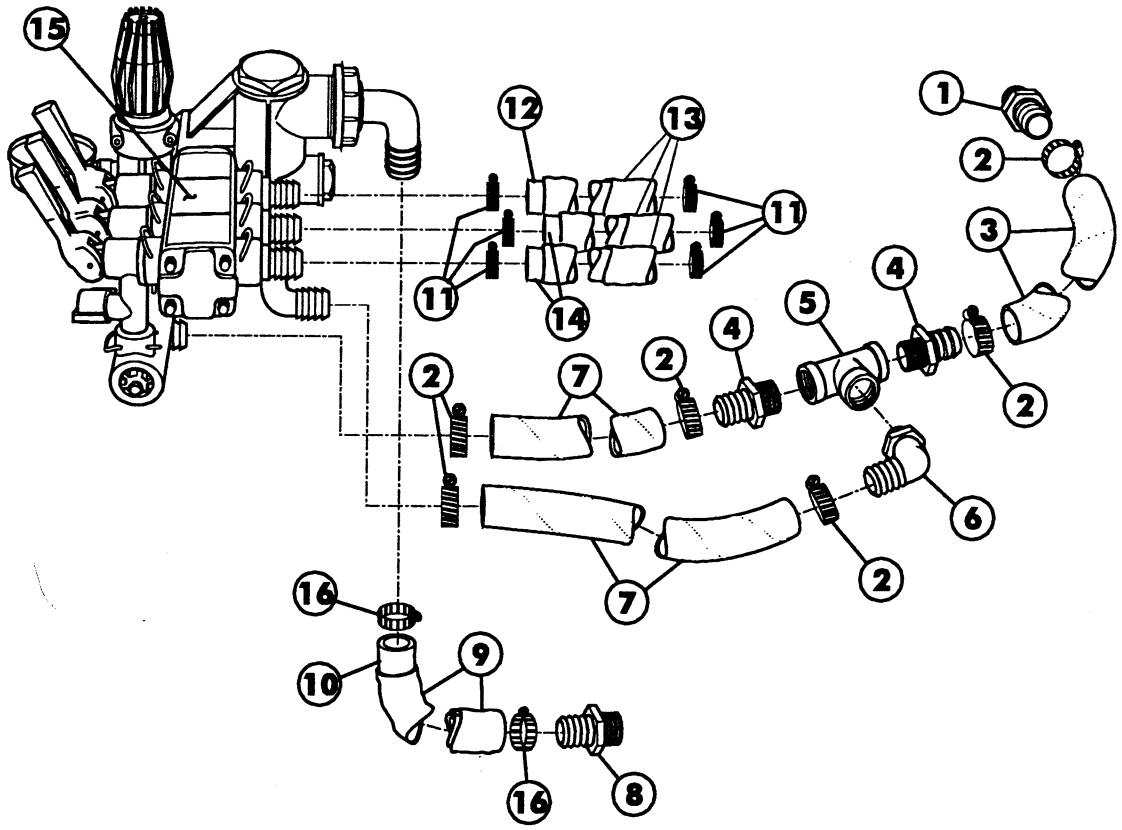

MANUAL SPRAY VALVE SET-UP

Ref	Part No.	Description	Qty
1	41308	Hose Barb, 1" MPT x 1-1/4" H.B.	1
2	41327	Hose Clamp	6
3	93-0883	Hose - Bypass to Tank, 1-1/4" x 67"	1
4	93-0851	Hose Barb, 1-1/4" MPT x 1-1/4" HB	2
5	93-0886	Tee, 1-1/4" NPT	1
6	93-0856	90° HB, 1-1/4" MPT x 1-1/4" HB	1
7	93-0882	Hose - Bypass, 1-1/4" x 27-1/2"	2
8	92-0012	Hose Barb, 1" MPT x 1" H.B.	1

Ref	Part No.	Description	Qty
9	93-0885	Hose Cover, 1.59" ID x 24"	1
10	93-0881	Hose - Supply, 1" x 24"	1
11	92-0045	Hose Clamp	6
12	97791	Boom Feed Hose, RH 124"	1
13	93-0884	Hose Cover, 1.19" ID x 36"	3
14	31188	Boom Feed Hose, 104"	2
15	93-0877	Control Valve	1
16	21146	Hose Clamp	2

BOOMS (MULTI-PRO 1100)

Ref	Part No.	Description	Qty
1	92-0045	Hose Clamp	22
2	40506	Jumper Hose, 3/4 x 19"	8
3	31188	Boom Feed Hose, 104"	2
4	97791	Boom Feed Hose, RH 124"	1
5	40493	Center Boom Pipe	1
6	40999	Clamp Assembly	11
7	40997	Adaptor Cap & Seat Gasket Ass'y	11
	40998	Seat Gasket (f/w 40997)	AR
8	40444	RA-10 Raindrop Nozzle (Std.)	11
	92-3977	RA-4 Raindrop Nozzle (Optional)	11

Ref	Part No.	Description	Qty
	43082	RA-5 Raindrop Nozzle (Optional)	11
	41088	RA-6 Raindrop Nozzle (Optional)	11
	42828	RA-8 Raindrop Nozzle (Optional)	11
	40223	RA-15 Raindrop Nozzle (Optional)	11
	93-0903	RA-25 Raindrop Nozzle (Optional)	11
9	41001	Nozzle Body & Chk Valve (Dbl. Barb)	6
10	41002	Nozzle Body & Chk Valve (Trp. Barb)	1
11	41000	Nozzle Body & Chk Valve (Sgl. Barb)	4
	41003	Diaphram (f/w 41000,41001&41002)	AR

BOOMS

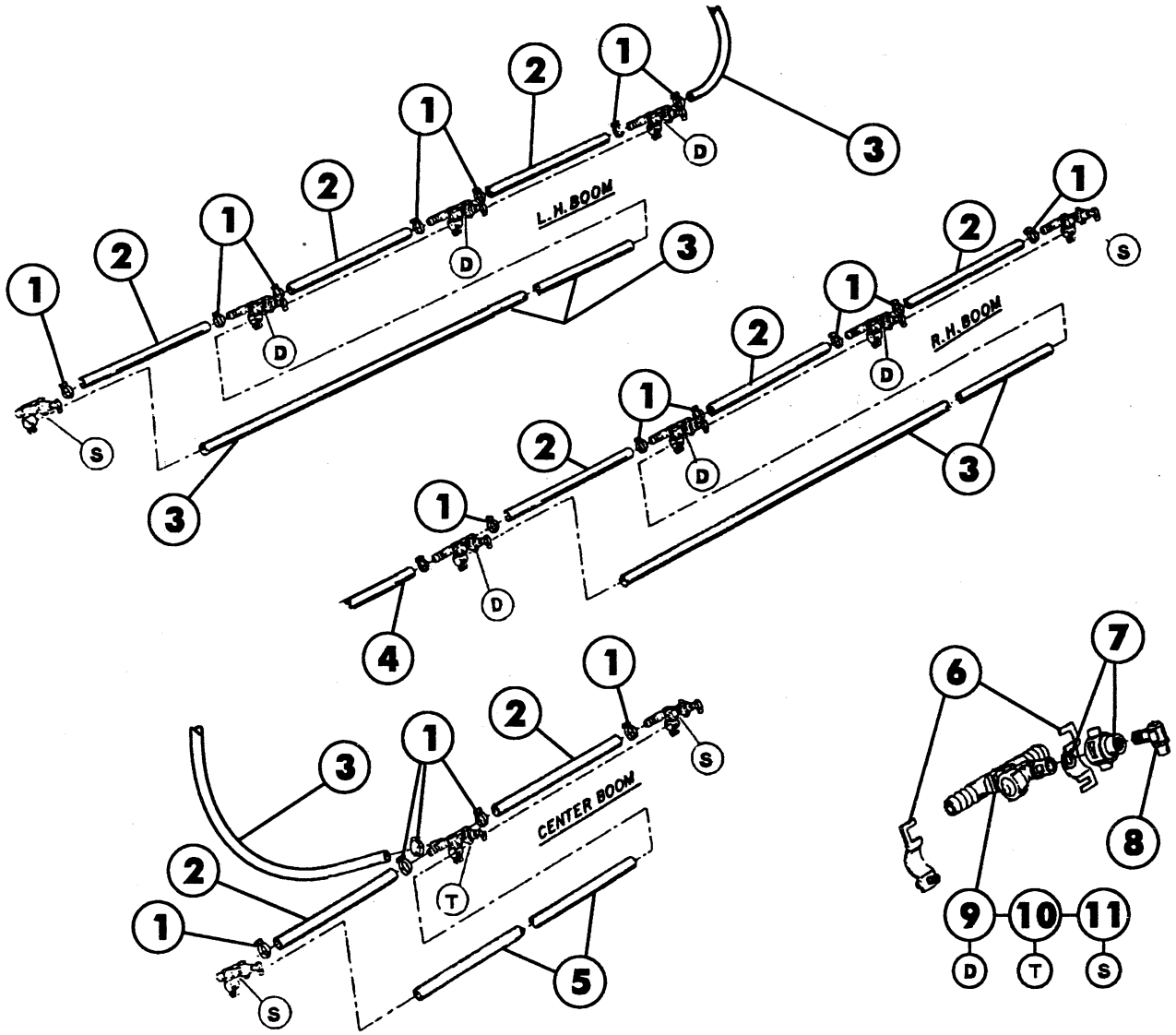

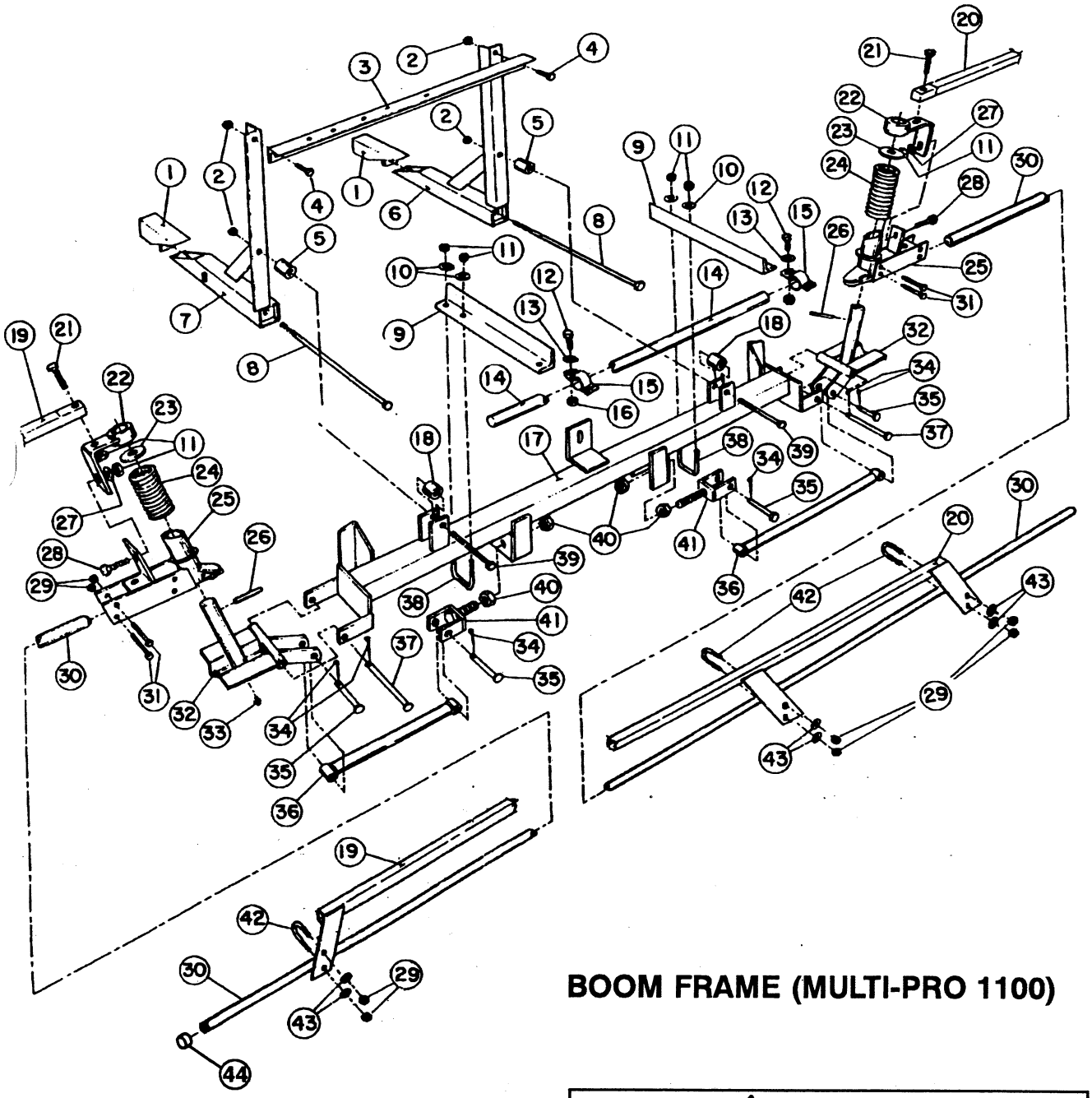

BOOM FRAME (MULTI-PRO 1100)

⚠ CAUTION
THE TWO SPRINGS (REF # 24) ARE UNDER APPROX. 150 LBS. OF PRESSURE. BE VERY CAUTIOUS WHEN REMOVING THE SPRING PINS (REF # 26) FOR REMOVAL OF THE SPRINGS.

IMPORTANT! THE TWO BOLTS (REF # 8) MUST BE TORQUED TO 50 FT. LBS.

BOOM FRAME (MULTI-PRO 1100)

Ref	Part No.	Description	Qty
1	42223	Tube Wedge Assy	2
2	22-15-AJF	Lock Nut, 1/2 NC	4
3	42225	Cross Support Angle	1
4	20-86-AGD	HHCS, 1/2 NC x 1-1/4"	2
5	42258	Spacer Tube, 1-1/4" lg.	2
6	42222	Boom Mount Assy	1
7	42217	Boom Mount Assy	1
8	42199	HHCS, 1/2 NC x 18"	2
9	42234	Center Boom Angle	2
10	24-10-AD	Flat Washer, 5/16	4
11	22-12-AJD	Hex Nut, 5/16 NC	8
12	20-47-AGD	HHCS, 3/8 NC x 1"	2
13	24-11-AD	Flat Washer, 3/8	2
14	40493	Center Boom Pipe	1
15	40494	Clamp Assy	2
16	22-13-AJF	Lock Nut, 3/8 NC	2
17	42227	Main Frame Tube-Welded Assy	1
18	42257	Spacer Tub, 1" Long	2
19	42711	Boom Support Assy - LH	1
20	42710	Boom Support Assy - RH	1
21	20-28-AGD	HHCS, 5/16 NC x 1-1/2"	2
22	42707	Support Bracket Assy	2

Ref	Part No.	Description	Qty
23*	24-18-BD	Flat Washer, 1" S.A.E.	2
24*	42196	Compression Spring	2
25*	42706	Breakaway Pivot Assy	2
26*	29-199-C	Spring Pin, 1/4 x 2"	2
27	24-10-BD	Flat Washer, 5/16 S.A.E.	2
28	25-25-AGD	Carriage Bolt, 5/16 NC x 3/4	2
29	22-11-AJF	Lock Nut, 1/4 NC	16
30	42282	Extension Boom Pipe Assy	2
31	20-8-AGD	HHCS, 1/4 NC x 1-3/4"	8
32*	42243	Hinge Assy	2
33*	361011	Grease Fitting	2
34	28-18-D	Cotter Pin, 1/8 x 1"	6
35	42195	Clevis Pin, 1/2 x 2"	4
36	42240	Strut Assy	2
37	42194	Clevis Pin, 1/2 x 4-1/2"	2
38	301950	U-Bolt, 5/16 NC	2
39	20-97-AGD	HHCS, 1/2 NC x 4"	2
40	22-17-AJD	Hex Nut, 5/8 NC	4
41	42237	Adjustable Clevis Assy	2
42	92-0010	U-Bolt, 1/4 NC	4
43	24-9-AD	Flat Washer, 1/4	8
44	92-8420	Boom Cap	4

* Denotes parts that are available in an assembled unit.
Order #42840 Breakaway Assembly

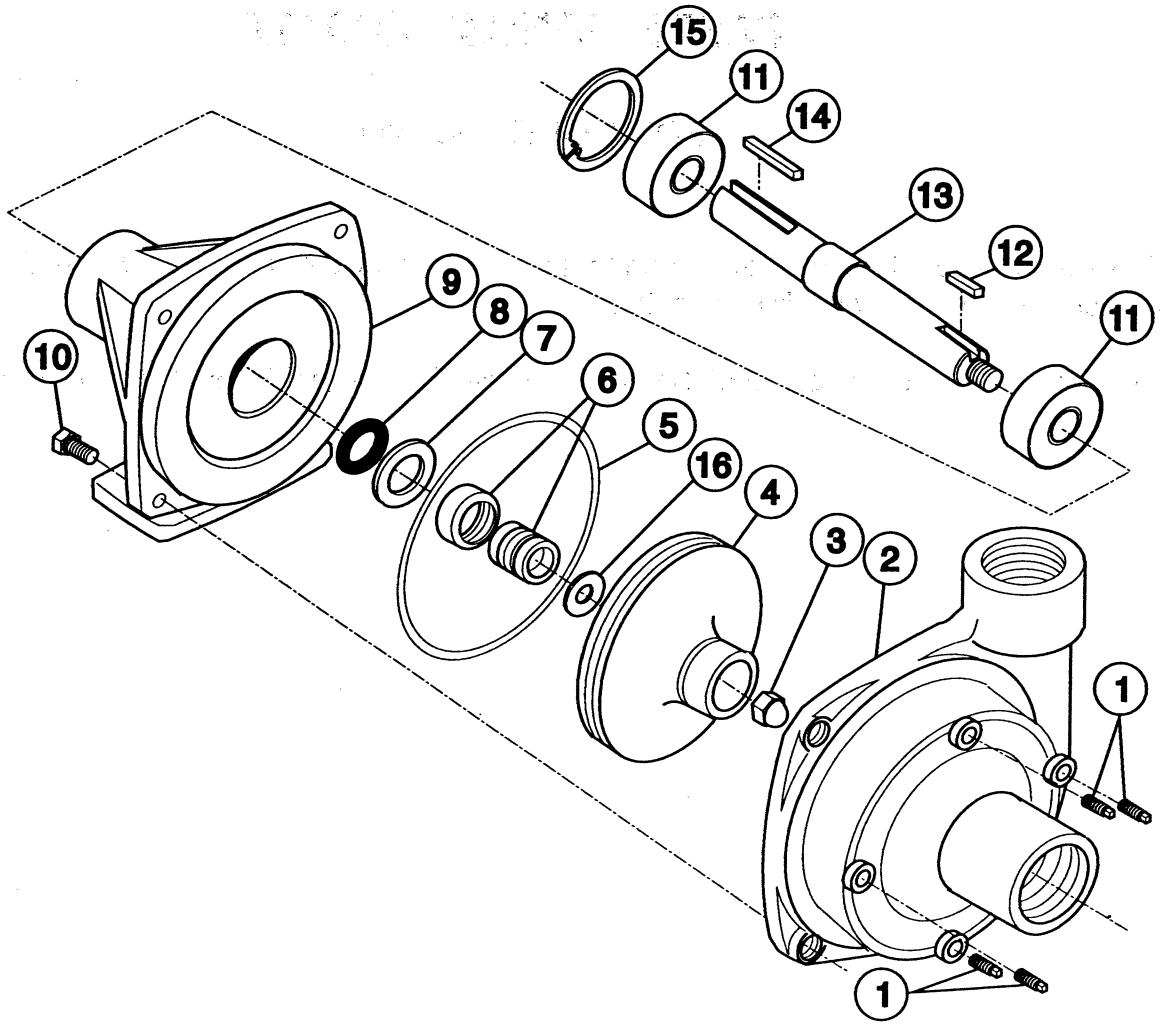

CENTRIFUGAL PUMP (93-0848)

Ref	Part No.	Description	Qty
1	42084	Drain Plug	4
2	93-0922	Pump Casting	1
3	42086	Impeller Nut	1
4	93-0923	Impeller (Polypropylene)	1
5	42089	O-Ring	1
6	42088	Mechanical Seal - Viton	1
7	93-0924	Seal Retainer	1
8	42092	Slinger Ring	1

Ref	Part No.	Description	Qty
9	93-0925	Mounting Flange	1
10	20-47-AGD	Bolt	4
11	93-0927	Ball Bearing	2
12	93-0928	Key	1
13	93-0929	Pump Shaft	1
14	93-0930	Key	1
15	42093	Bearing Retainer	1
16	93-0931	Gasket	1