FORM NO. 93-1049

TORO

MODEL NO. 41120-50001 & UP
MODEL NO. 41128-50001 & UP
MODEL NO. 41020-50001 & UP
MODEL NO. 41021-50001 & UP
MODEL NO. 41130-50001 & UP

SET-UP AND PARTS CATALOG

PRO-CONTROL™ SPRAY SYSTEM
FOR THE MULTI-PRO 1100™ VEHICLE

Refer to the illustrated Parts List for the details of parts used in assembling the Pro-Control™ System.

NOTE: "Right", "Left", "Front" and "Rear" are referenced while seated in the operator's position.

CONSOLE COMPUTER:

1. Remove four (4) 1/4" x 5/8" washer hd cap screws to remove the Rear Panel from the Steering Console.

2. Remove the knock-out plug in the front of the Steering Console and insert the large grommet. See FIG. 1.

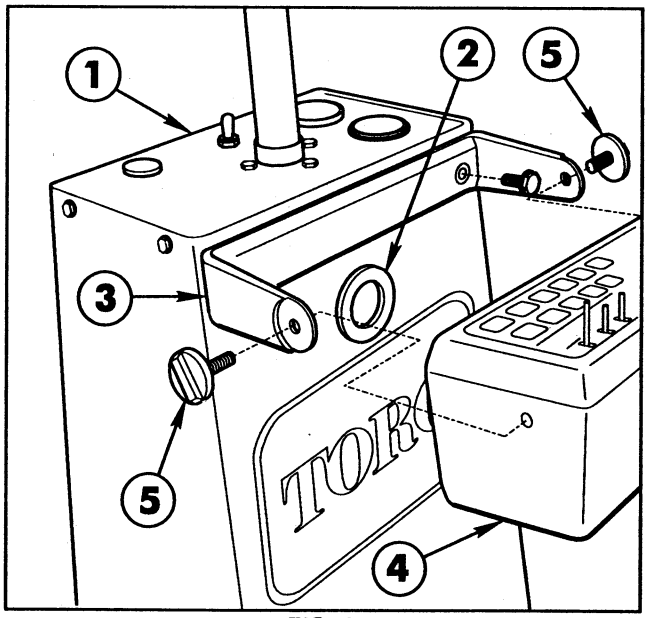

FIG. 1

1. Steering Console
2. Grommet
3. Mounting Bracket
4. Console Computer
5. Mounting Knobs

3. Remove the "U"-shaped Mounting Bracket from the Console Computer and secure the Mounting Bracket to the Steering Console with two (2) 1/4" x 3/4" washer hd. screws as shown in FIG. 1.

4. Reinstall the Console Computer within the Bracket and secure with the two (2) Mounting Knobs.

5. Insert the Console Control Cable from inside the Steering Console, through the grommeted hole, and plug it into the receptacle in the rear of the Computer. Secure with locking ring.

6. Route the Cables through the three "U" shaped brackets under the left side of the Vehicle frame, toward the rear of the Vehicle. Secure the cables with the plastic ties provided. Connect the Console Control Cable to the 3 ft. Flow Control Cable

7. Turn the Computer's "POWER ON/OFF" Switch to "OFF".

8. Route the red and white Battery Wires of the Console Control Cable to the Fuse Block mounted inside the Seat Support.

9. Crimp the spade terminal to the white wire. Crimp the push-on terminal to the red wire. See FIG. 2.

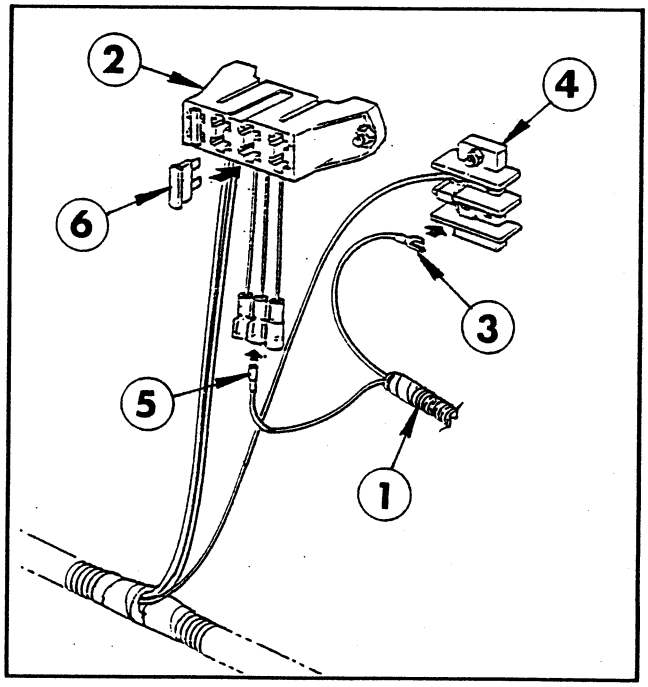

FIG. 2

1. Console Control Cable
2. Fuse Block
3. Spade Terminal
4. Ground Terminal
5. Push-On Terminal
6. Fuse (20-Amp)

10. Ground the spade terminal on the white wire to the Ground Terminal Block.

©The Toro Company-1994
All Rights Reserved

CONSOLE COMPUTER (Cont'd.)

11. Connect the push-on terminal on the red wire to the male terminal on the red wire coming from the Fuse Block.

12. Insert the 20-amp Fuse into the Fuse Block receptacle.

NOTE: The remaining Wiring Harness connections will be made after the Tank and Saddle and the Boom Frame are installed on the Vehicle.

SPEED SENSOR:

1. Mount the four (4) Wheel Magnets to the inside rim of the Vehicle's left rear wheel with eight (8) hex nuts and four (4) lock washers as shown in FIG. 3. **IMPORTANT!** Magnets must be mounted in alternating red-black sequence.

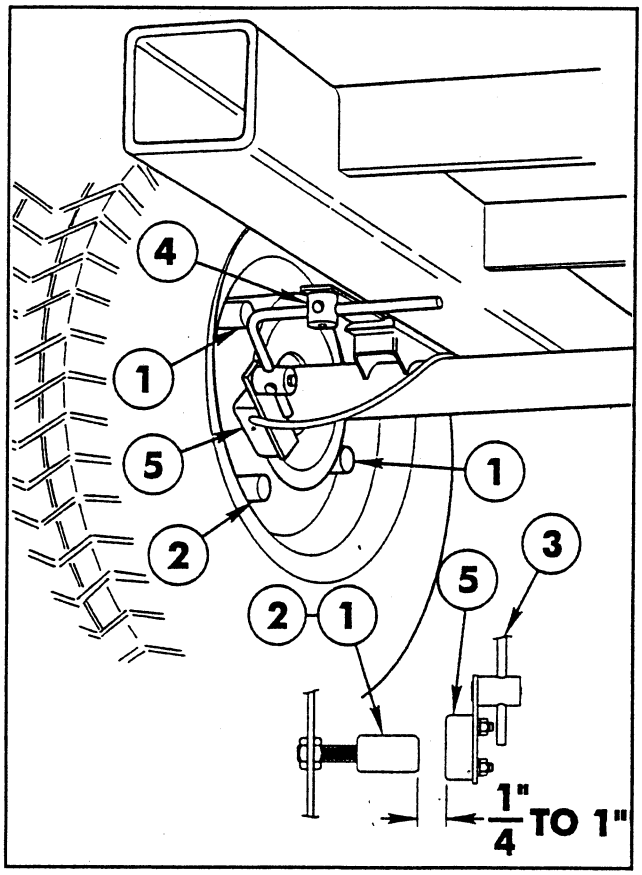

FIG. 3

1. Wheel Magnet (RED)
2. Wheel Magnet (BLACK)
3. Sensor Rod
4. Turret Assembly
5. Sensor Switch
6. Speed Sensor Cable

2. Insert the longest leg of the Sensor Rod into the hole in one of the Turret Assemblies. Tighten the flat head screw holding the Turret to the Strap.

3. Mount the Turret Assembly to the bottom of the Angle welded to the Vehicle Frame (behind the angle holding the Rear Axle Mount) using two (2) 1/4" x 1" cap screws, lock washers and hex nuts.

4. Assemble the Sensor Switch to the other Turret Assembly with the two (2) 1/4" lock washers and hex nuts.

5. Insert the shorter leg of the Sensor Rod into the Turret Assembly so that the Sensor Switch is parallel with the Sensor Rod as shown.

6. Position the Sensor Switch on the Sensor Rod so that as the Wheel rotates, the Magnets pass across the center of the black molded Switch Assembly.

7. Adjust the position of the longer leg within the Turret Assembly until there is a clearance gap of 1/4" to 1" between the Switch Assembly and the Wheel Magnets.

8. Rotate the Wheel and make sure the clearance gap is correct between each of the four Wheel Magnets. When adjustment is correct, secure the Turrets to the Sensor Rod by tightening the square hd. set screws.

9. Route the Speed Sensor Cable over the Vehicle's Rear Axle, along the left hand side of the Frame, and through the hole in the floor board to the inside of the Steering Console.

10. Bring the Cable up and through the grommeted hole in the Steering Console and plug it into the rear of the Console Computer. Secure with locking ring.

CENTRIFUGAL PUMP:

IMPORTANT! If the optional Rollover Protection Structure (ROPS) is to be installed on the Vehicle, it must be installed prior to installing the Centrifugal Pump. See the Installation Instructions furnished with the ROPS (model no. 41185); or the ROPS Adaptor Kit (part no. 92-8240). If the Multi-Pro Vehicle's Serial no. is between 20101 and 30370, disregard Step 1 in the following instructions.

1. Mount the Pivot Mounting Plate to the angle on the bottom of the Vehicle Frame, using two 1/2" x 1-1/4" cap screws and lock nuts. See FIG. 4.

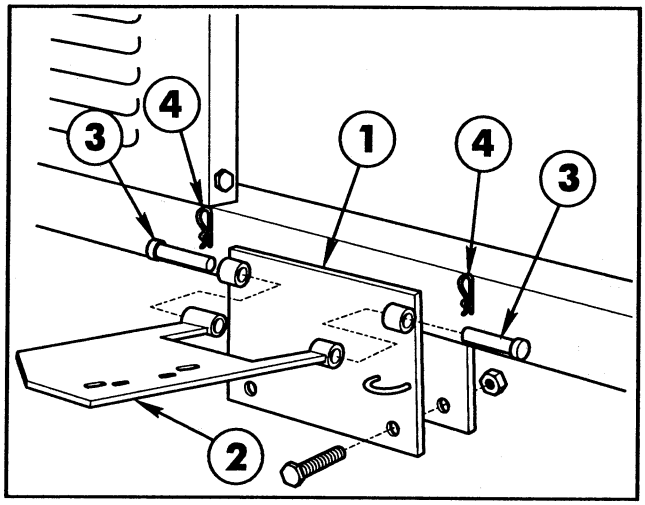

FIG. 4

1. Pivot Mounting Plate
2. Pump Pivot Plate
3. Clevis Pin
4. Hair Pin Cotter

2. Align the pivot tubes on the Pump Pivot Plate with those on the Pivot Mounting Plate. Insert the two (2) clevis pins and secure with two (2) hairpin cotters.

NOTE: In the following instructions, "sealer" refers to RTV clear silicone.

3. Secure the Centrifugal Pump in a vise. Apply thread sealer and install the fittings to connect the Suction, Supply, Agitator and Overflow Hoses to the Pump as shown in FIG. 5.

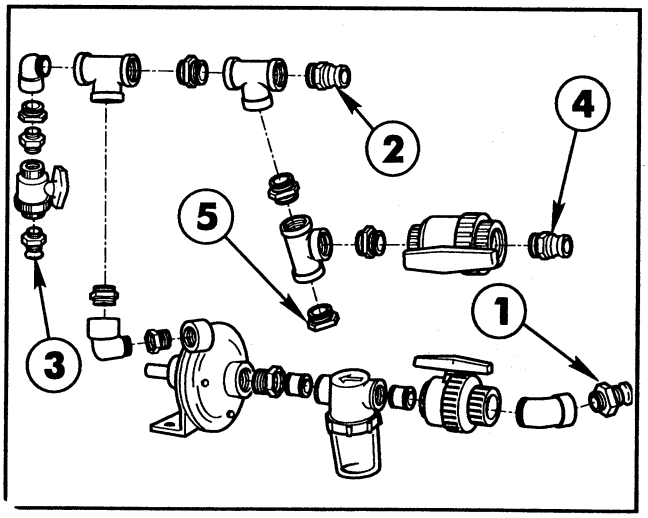

FIG. 5

1. Suction
2. Supply
3. Agitator
4. Overflow
5. Accessory

4. Assemble the Pump Drive Pulley onto the Pump shaft with the Pulley's **hub** facing **away** from the Pump.

5. Assemble the Centrifugal Pump and the Spring Mounting Angle to the Pump Pivot Plate, using two (2) 3/8" x 1-1/2" cap screws, flat washers and lock nuts as shown in FIG. 6.

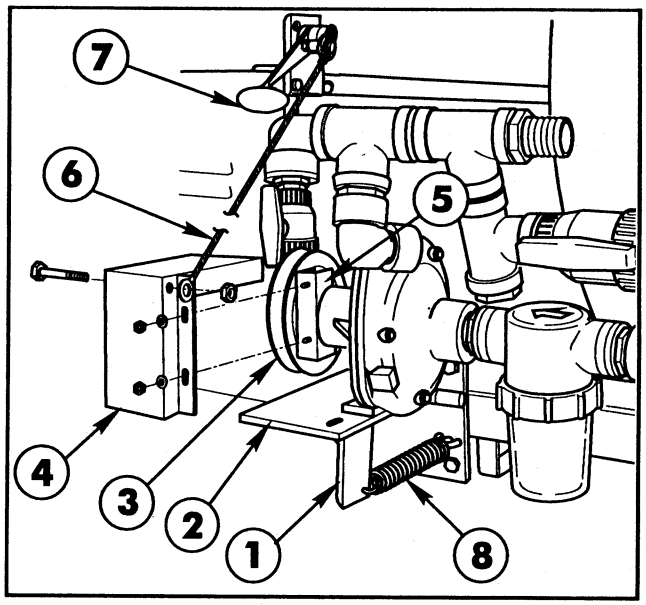

FIG. 6

1. Spring Mounting Angle
2. Pump Pivot Plate
3. Pump Pulley
4. Pump Belt Cover
5. Pump Cover Clamp
6. Pump Cable
7. Accessory Control Lever
8. Pump Spring

6. Using a straight edge as a guide, position the Pump Pulley so that it is in alignment with the Engine's Drive Pulley. When alignment is correct, tighten the two (2) set screws in the Pump Pulley's hub.

7. Install the Pump Drive Belt around the Pump Pulley and Engine drive Pulley.

8. Loosely mount the Pump Belt Cover to the Pump hub with the Pump Cover Clamp and the two (2) 3/8" flat washers and lock nuts.

9. Insert the 3/8" x 4" cap screw through the Pump Cover and into the hole in the Pump Cable's end fitting. Secure the Cable to the Cover with a 3/8" lock nut.

10. Remove the hair pin cotter and flat washer from the pin in the Accessory Control Lever. Push the Control Lever down (engaged). Slide the unattached end of the Cable onto the pin and secure with the flat washer and hair pin cotter previously removed.

11. Connect one end of the Pump Spring to the ring on the Pump Pivot Plate and the other end through the hole in the Spring Mounting Angle.

12. Engage the Accessory Control Lever...DO NOT START THE ENGINE! Adjust the Belt Guide to obtain 1/8" clearance between the inside of the Guide and the Belt.

13. Rotate the Belt Cover around the Pump hub until the tension on the Pump Control Cable requires a small amount of pressure to snap the Control Lever "over-center" to disengage the Pump drive. Make sure there is 1/8" clearance between the Belt and the inside of the Belt Cover. Tighten the lock nuts after adjustment is complete.

CENTRIFUGAL PUMP (CONT'D):

If Step 13 does not achieve the necessary tension on the Control Cable, loosen the Pump mounting bolts and slide the Pump on the Pivot Plate to move it away from the Vehicle Frame, increasing the Cable tension.

TANK ASSEMBLY:

1. Cut the shipping straps and remove the Spray Tank and Saddle Assembly from the shipping skid.

NOTE: In the following instructions, sealer refers to RTV clear silicone when used for pipe fittings.

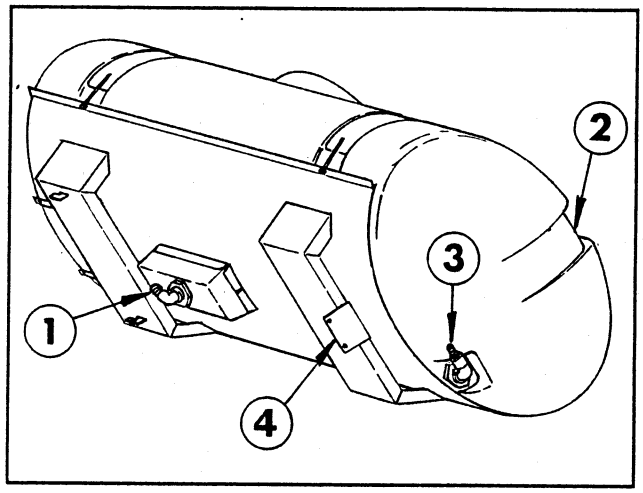

FIG. 7

1. Barbed Elbow (Suction)
2. Spill-way
3. Elbow & Hose Barb (Overflow)
4. Mounting Member

2. Apply thread sealer and install the 90° barbed elbow into the bottom of the Spray Tank.

NOTE: Position the barbed elbow as shown in FIG. 7, so that it will angle toward the left front of the Vehicle after the Tank is installed on the Vehicle.

3. Attach the 1-1/4" x 21" Suction Hose to the barbed elbow in the bottom of the Tank with a hose clamp. Attach the 1-1/4" barbed female quick coupler to the other end of the Suction Hose and secure with a hose clamp.

4. Attach the 1/2" x 42" Agitator Hose to the 1/2" barbed elbow in the front of the Tank with a hose clamp. Attach the 1/2" barbed female quick coupler to the other end of the Agitator Hose and secure with a hose clamp.

5. Apply thread sealer and install the 90° street elbow and a hose barb into the fitting at the rear ("spillway") of the Tank. Attach the 1" x 58" Overflow Hose to the hose barb with a hose clamp. Attach a female quick coupler to the other end of the Overflow Hose and secure with a hose clamp.

6. Place the Tank and Saddle Assembly on the Vehicle Frame.

7. Slide the Tank and Saddle forward, to hook the two lugs on the front Saddle under the Vehicle's cross member, resting the angle under the rear Saddle over the Vehicle's rear cross member.

8. Secure the rear Saddle Angle to the Vehicle's cross member with two (2) 1/2" x 1-1/2" cap screws, flat washers, lock washers and hex nuts.

9. Route the Suction Hose over the left side of the Vehicle frame and connect the couplers at the Suction Ball Valve.

10. Route the Agitator Hose over the Vehicle frame and under the Pump to connect the couplers at the Agitator Ball Valve.

11. Route the Overflow Hose forward, through the Tank Saddle, along the left side of the Vehicle frame. Connect the couplers at the Overflow Ball Valve.

FLOW METER:

1. Attach a 1-1/4" x 3" Adaptor Hose to the barb on the outlet end of the Flow Meter. Secure with a hose clamp. See FIG. 8

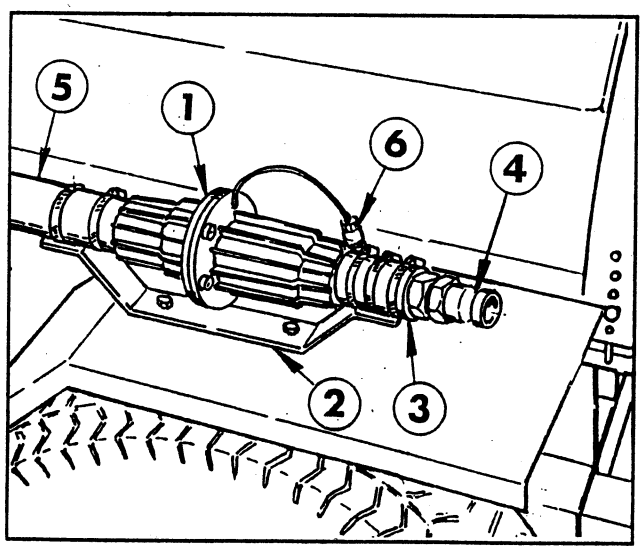

FIG. 8

1. Flow Meter
2. Mounting Bracket
3. Adaptor Hose
4. Quick Coupler (male)
5. Supply Hose
6. Flow Control Cable Connector

FLOW METER (Cont'd):

2. Slide a 1-1/4" hose barb into the other end of the Adaptor Hose and secure with a hose clamp.

3. Apply thread sealer and attach the 1" male quick coupler to the hose barb's threaded end.

4. Secure the Flow Meter to the Mounting Bracket with the two (2) hose clamps furnished.

5. Connect the 1-1/4" x 18" Supply Hose between the barb on the inlet end of the Flow Meter and the hose barb in the tee at the Pump. Secure with two (2) hose clamps.

6. Position the completed Flow Meter Assembly on the Mounting Bracket as shown in FIG. 8.

IMPORTANT! The flow must be in the direction of the arrow on the Flow Meter.

7. Install the Mounting Bracket to the Vehicle's left rear fender, using two (2) 5/16 x 1" cap screws, flat washers and hex nuts. See FIG. 8.

8. Connect the wire from the Flow Meter to the mating connector on the Flow Control Cable.

BOOM FRAME ASSEMBLY:

1. Apply a heavy coating of grease to the tubes of the two Boom Mount Assemblies and insert them into the Vehicle Frame as shown in FIG. 9.

NOTE: Note the position of the angle member of the Boom Mount Assemblies, in relation to the tube member. They must be positioned as shown, for the mounting of the Cross Support Angle.

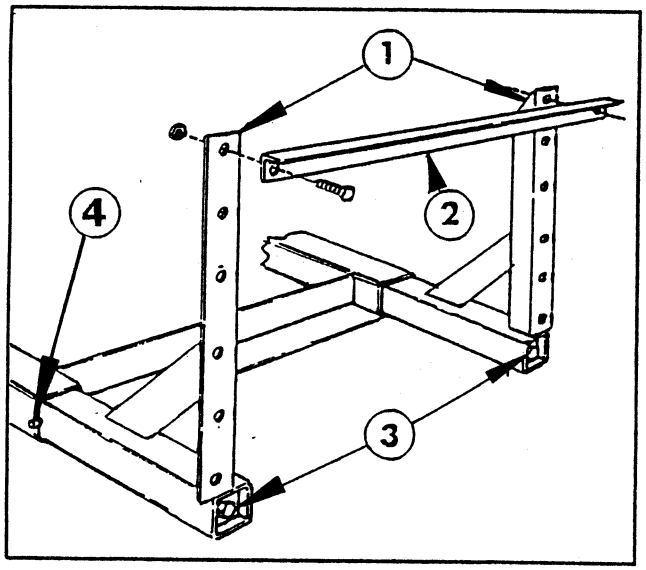

FIG. 9

1. Boom Mount Assy.
2. Cross Support Angle
3. Wedge Screw
4. Stop Pin

Steps 3 and 4 apply to the assembly of the Standard Boom only. If the optional "Boom Pivot Kit" is to be installed, see the instructions furnished with that kit. The Cross Support to be used with that kit is different than the Support used on the Standard Boom.

3. Position the Cross Support Angle and attach it to the Boom Mount Assemblies with two 1/2" x 1-1/4" hex hd cap screws, and lock nuts.

4. Position the Spacer Tubes between the Boom Mount uprights and the lugs on the Main Frame Tube. Use two 1/2" x 4" hex hd. cap screws and lock nuts to secure the Main Frame Tube to the uprights. See FIG. 10.

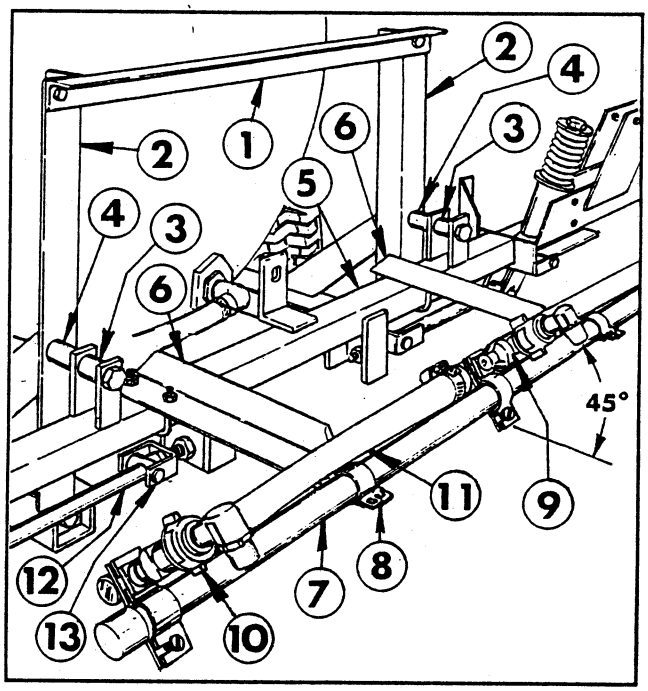

FIG. 10

1. Cross Support Angle
2. Boom Mount Assy.
3. Spacer Tube, 1" lg.
4. Spacer Tube, 1-1/4" lg.
5. Main Frame Tube
6. Center Boom Angle
7. Center Boom Pipe
8. Boom Clamp
9. Triple Barb Nozzle
10. Single Barb Nozzle
11. Jumper Hose
12. Strut Assembly
13. Adjustable Clevis

5. Using a torque wrench, tighten the 1/2" x 18" screws that join the Wedges to the Boom Mounts. Tighten to 50 ft. lbs.

6. Position the two (2) Center Boom angles on the Main Frame and secure them to the Main Frame tube with two (2) square U-bolts, four (4) flat washers and hex nuts. See FIG. 10.

7. Center and attach the Center Boom Pipe to the two Center Boom Angles with two (2) clamps, 3/8" x 1" cap screws, flat washers and lock nuts.

BOOM FRAME (Cont'd):

8. Loosely attach the triple barb Nozzle Assembly in the approximate center of the Center Boom Pipe. For the most uniform spray coverage, position all Nozzle Assemblies at a 45° angle as shown in FIG. 10. Tighten clamp screw to secure the Nozzle to the Boom Pipe.

9. Loosely attach a single barb Nozzle Assembly to each end of the Center Boom Pipe. Place two hose clamps on the two 3/4" x 19" Jumper Hoses and connect the single barb Nozzles to the triple barb Nozzle. Tighten all fasteners securely.

10. Attach the two Strut Assemblies to the two adjustable clevis' found on each side of the Main Frame tube with two (2) 1/2" x 2" clevis pins and two (2) 1/8" x 1" cotter pins.

11. Insert the plugged end of an Extension Boom Pipe into the Pivot Assembly and secure with four (4) 1/4" x 1-1/4" cap screws and lock nuts. See FIG. 11. Repeat on the opposite side to assemble the other Extension Boom.

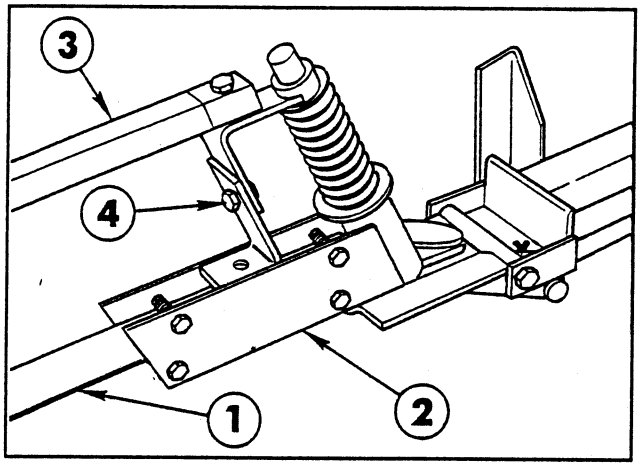

FIG. 11

1. Extension Boom Pipe
2. Pivot Assembly
3. Boom Support Assembly
4. Height Adjustment

IMPORTANT! DO NOT over-tighten the nuts in steps 11 and 13. The clamping action could crush the Boom Pipe.

12. Attach the Boom Support Assembly to the Pivot Assembly, using a 5/16" x 1-1/2" cap screw and lock nut.

13. Secure the two plates of the Boom Support Assembly to one of the Extension Boom Pipes, using two (2) 1/4" U-bolts, four (4) lock nuts and flat washers. See FIG. 12.

14. Assemble the Boom Support Assembly to the other Extension Boom Pipe.

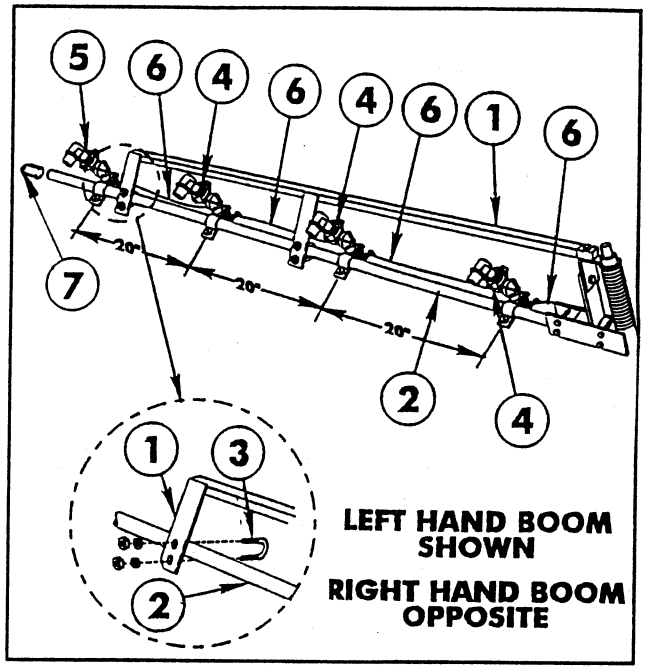

FIG. 12

1. Boom Support Assembly
2. Extension Boom Pipe
3. U-bolt
4. Double Barb Nozzle
5. Single Barb Nozzle
6. Jumper Hose
7. Boom Cap

15. Adjust the Booms to a level position by adjusting the jam nuts on the adjustable clevis assemblies (See FIG. 10) to the desired position, then tighten the end nuts against the Main Frame plate.

16. Attach three double barb and one single barb Nozzle Assemblies on each Extension Boom Pipe as shown in FIG. 12. Nozzles are to be spaced on 20 inch centers. Connect the Nozzle Assemblies with the 3/4" x 19" Jumper Hoses. Secure with hose clamps.

17. Install the plastic Boom Caps over the ends of the Boom Pipes.

CONTROL VALVE/SOLENOID ASSEMBLY:

1. Apply thread sealer and install the 1" x 3/4" reducing nipple into the **outlet** port of the Motorized Control Valve. Install the 1" x 3/4" reducer bushing, 45°-1" elbow and 3/4" hose barb into the **inlet** port of the Control Valve.

2. Connect the Motorized Control Valve and the Solenoid Assembly by screwing the two together. See FIG. 13.

3. Apply thread sealer and install three 1/2" hose barbs into the bottom of the Solenoid Assembly. Install 3/4" barbed elbow in the end of the Solenoid Assembly.

4. Loosely attach the Control Valve Bracket to the Cross Support with two (2) 5/16" x 3/4" cap screws, flat washer and nut.

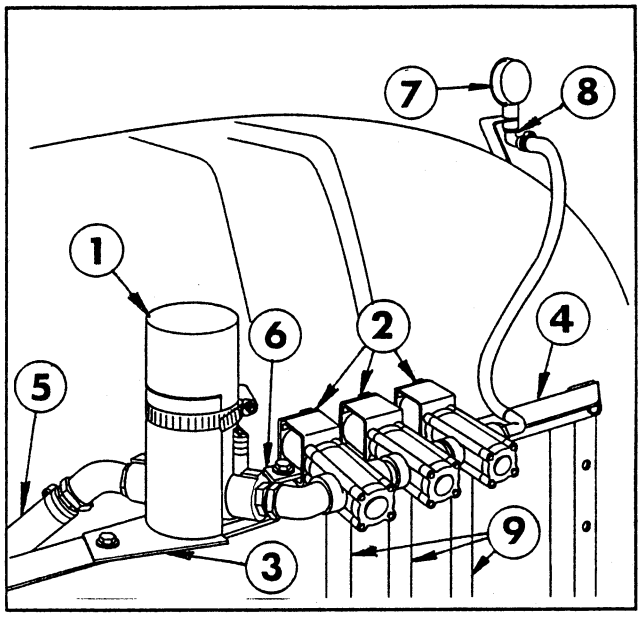

FIG. 13

1. Control Valve
2. Solenoid Assy.
3. Control Valve Brkt.
4. Cross Support Angle
5. Flow Meter Hose
6. Solenoid Mtg. Strap
7. Pressure Gauge
8. Barbed Elbow
9. Boom Feeder Hose

5. Slide the Solenoid Mounting Strap into position and mount the complete Control Valve and Solenoid Assembly to the Cross Support as shown in FIG. 13. Use four 5/16" x 1" hex hd cap screws with four washers placed below the screw heads, two between the strap and the Cross Support and four below the Cross Support under the nuts.

6. Secure the Control Valve to it's Mounting Bracket with the large hose clamp. Tighten all fasteners securely.

7. Assemble the Pressure Gauge and the 1/4" barbed elbow to the Gauge Bracket. Remove the protective cap and mount the Bracket to the carriage bolt in the rear Tank Band, using a 5/16" hex nut and lock washer.

8. Connect the Pressure Gauge to the Solenoid Assembly with the 3/8" x 32" hose. Secure the hose with hose clamps.

9. Connect the 1" x 24" Flow Meter Hose to the hose barb in the Motorized Control Valve and secure with a hose clamp.

10. Install the barbed female quick coupler on the other end of the Flow Meter Hose and secure with a hose clamp.

11. Connect the couplers at the Flow Meter.

12. Connect the Boom Feeder Hoses to the barbs in the Solenoid with hose clamps. The two 3/4" x 50" Hoses are to be attached to the left and right Solenoids. The 3/4" x 36" Hose is to be attached to the center Solenoid.

13. Place a hose clamp on the Center Boom Feeder Hose and attach it to the triple barb Nozzle on the Center Boom Pipe.

14. Place a hose clamp on the right and left Boom Feeder Hoses and attach them to the double barb Nozzles on the right and left Extension Boom Pipes.

FLOW CONTROL CABLE:

1. Route the Flow Control Cable up, along the left Boom Mount, and across the Cross Support Angle, to make the connections to the Motorized Control Valve and the Solenoid Valves. See FIG. 14.

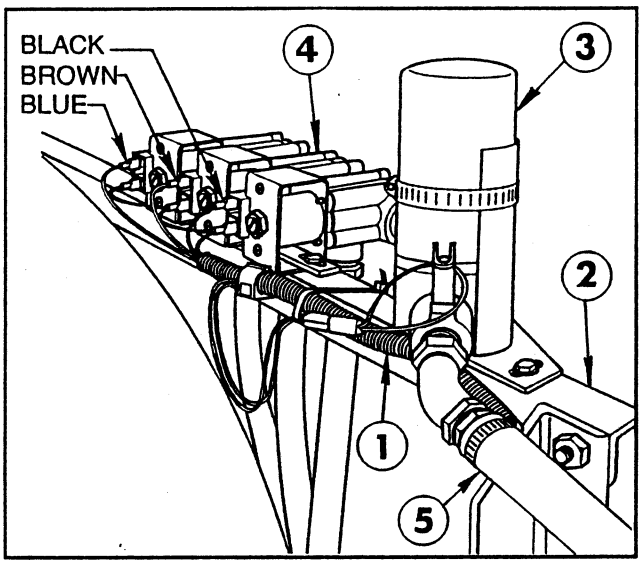

FIG. 14

1. Flow Control Cable
2. Cross Support Angle
3. Control Valve
4. Solenoid Assembly
5. Flow Meter Hose

2. Connect the black wire on left solenoid, brown on middle solenoid, blue on right solenoid and a white jumper on all three solenoids.

3. Secure the Flow Control Cable to the Boom Frame with the plastic ties provided.

Recheck and tighten all fasteners and hose clamps securely.

Fill the tank with clean water and check for any leaks.

Refer to the Pro-Control™ Operator's Manual for the proper calibration and operation of the Pro-Control Spray System.

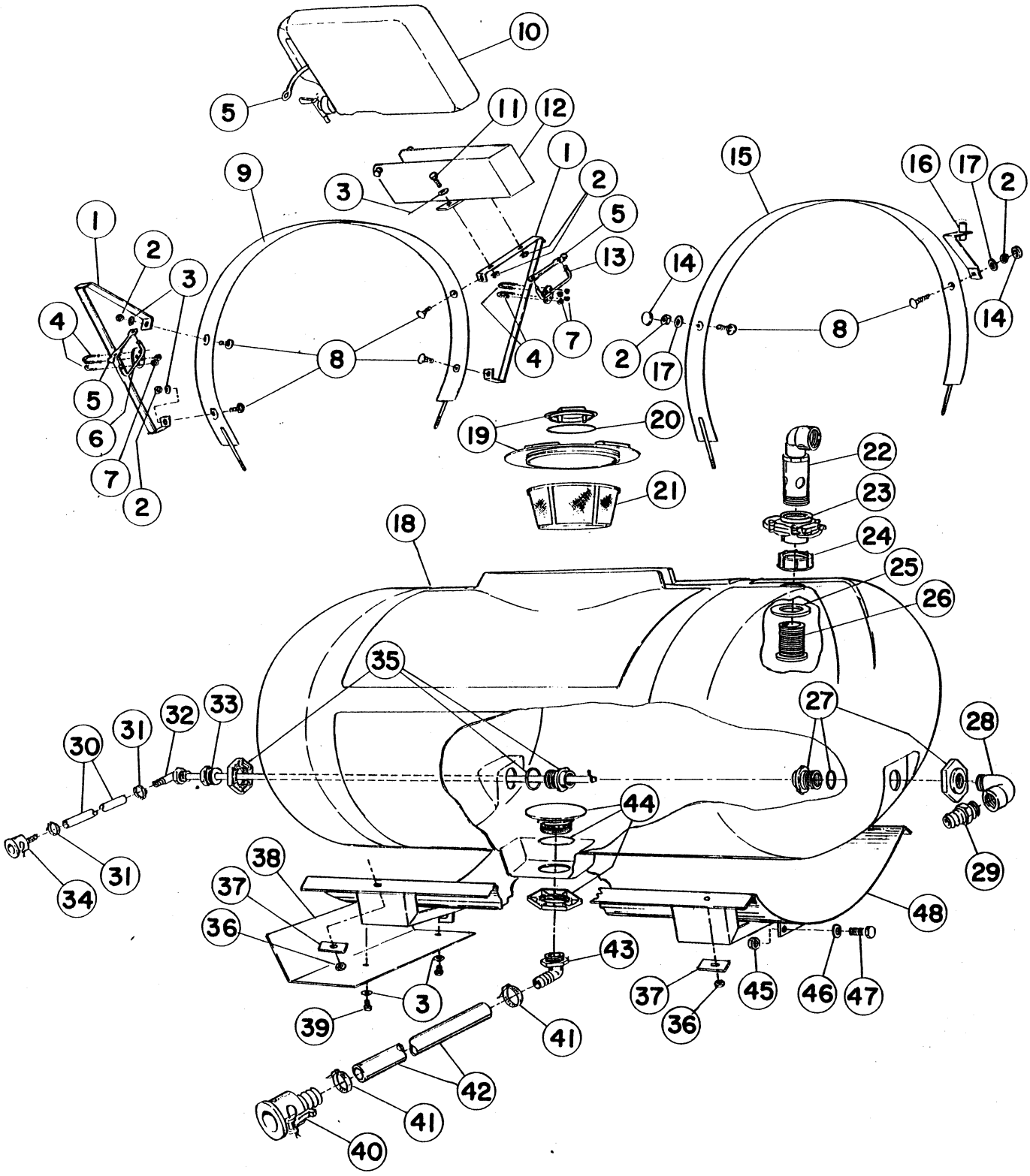

PRO–CONTROL™ TANK (MULTI–PRO 1100)

PRO-CONTROL TANK (MULTI-PRO 1100)

Ref	Part No.	Description	Qty
1	42983	Hold-In Brace Assembly	2
2	22-12-AJD	Hex Nut, 5/16 NC	6
3	24-10-BD	Flat Washer, 5/16	4
4	92-0010	U-Bolt, 1/4 NC	4
5	42198	Rubber Hold-Down	3
6	42259	Boom Hold-In Assembly (left)	1
7	22-11-AJFD	Lock Nut, 1/4 NC	8
8	25-25-AGD	Carriage Bolt, 5/16 NC x 3/4	6
9	42880	Tank Band Assembly (front)	1
10	92-3976	Clean Water Wash Tank	1
	93-0828	Spigot (f/w 92-3976 Tank)	1
11	20-26-AGD	HHCS, 5/16 NC x 1"	2
12	92-3969	Wash Tank Bracket	1
13	42316	Boom Hold-In Assembly (right)	1
14	42452	Protective Cap	2
15	43013	Tank Band Assembly (rear)	1
16	42277	Pressure Gauge Bracket	1
17	23-10-GD	Lock Washer, 5/16	2
18	42879	Tank Assembly - 160 Gals.	1
19	42322	Tank Lid (f/w Tank Assy.)	1
	92-3765	Vent Cap	1
20	42859	Breather Gasket (f/w Tank Assy.)	1
21	42323	Filler Basket (f/w Tank Assy.)	1
22	43069	Stand Up Assembly	1
23	43064	Knife Valve	1
24	43068	Fly Nut, 2" NPT	1
25	43067	Sealing Washer	1

Ref	Part No.	Description	Qty
26	43066	Bulk Head, 2" NPT	1
27	41800	Tank Fitting, 1" NPT (f/w Tank Assy)	1
28	41307	90° St. Elbow, 1" NPT	1
29	92-0012	Hose Coupling, 1" MPT x 1" HB	1
30	42946	Agitator Hose, 1/2" x 42"	1
31	96609	Hose Clamp	2
32	42981	Agitator Tube Assembly	1
	42842	Barbed Elbow	1
33	41969	Reducer Bushing, 3/4" MPT x 1/2" FPT	1
34	40487	Female Quick Coupler, 1/2" HB	1
35	41801	Tank Fitting, 3/4" NPT (f/w Tank Assy)	1
36	22-13-AJD	Hex Nut, 3/8" NC	4
37	43014	Backing Strap	4
38	92-3525	Heat Shield	1
39	20-24-AGD	HHCS, 5/16 NC x 3/4	2
40	93-0854	Female Quick Coupler, 1" HB	1
41	41327	Hose Clamp, 1-1/4"	2
42	93-0858	Suction Hose, 1" x 21"	1
43	93-0856	90° Elbow, 1-1/4" MPT x 1-1/4" HB	1
44	41798	Anti Vortex Fitting, 1-1/4" NPT (f/w Tank Assy)	1
45	22-15-AJD	Hex Nut, 1/2 NC	2
46	23-13-GD	Lock Washer, 1/2	2
47	20-86-AGD	HHCS, 1/2 NC x 1-1/4"	2
48	42878	Tank Saddle Assembly	1

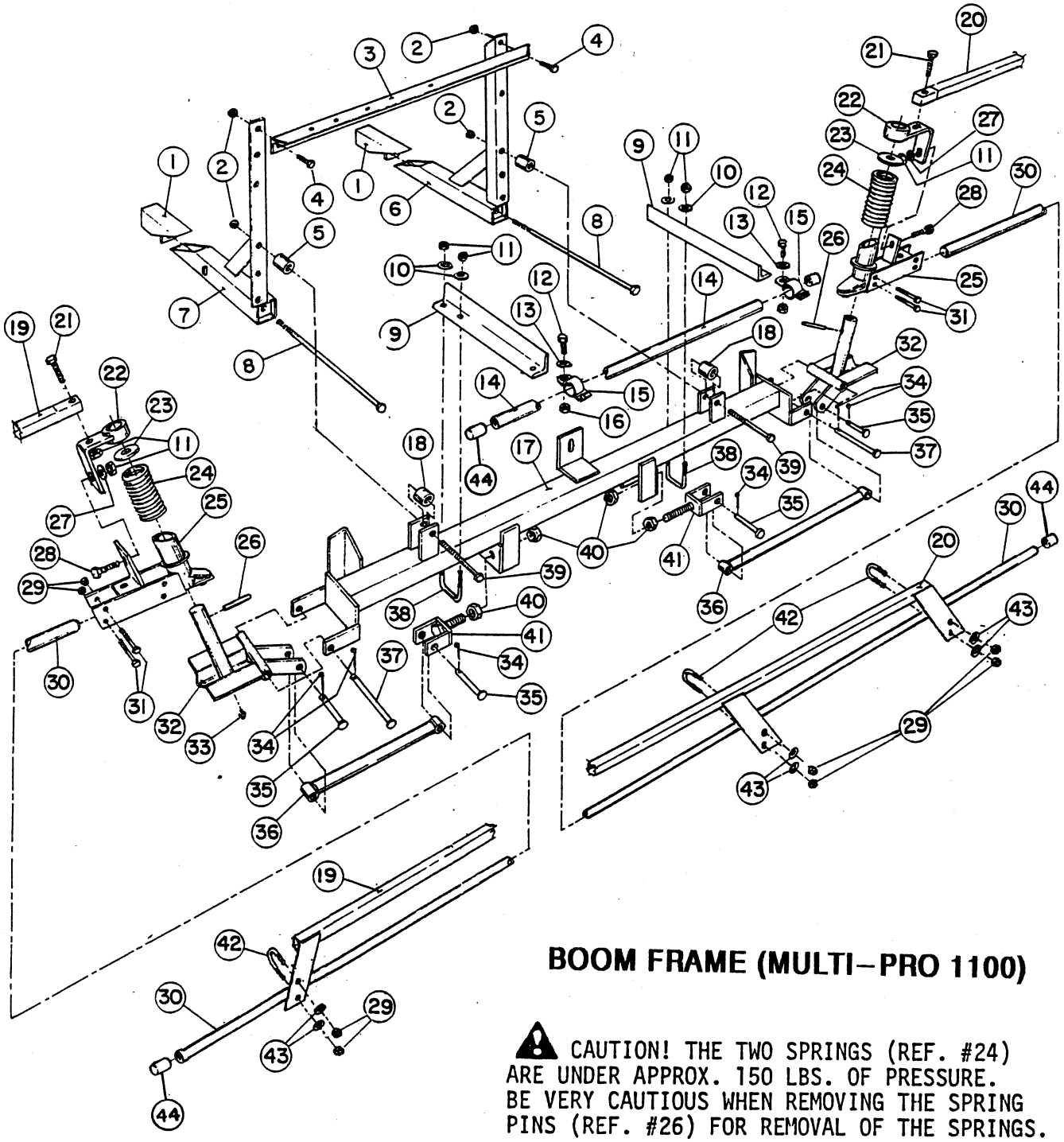

BOOM FRAME (MULTI–PRO 1100)

⚠ CAUTION! THE TWO SPRINGS (REF. #24) ARE UNDER APPROX. 150 LBS. OF PRESSURE. BE VERY CAUTIOUS WHEN REMOVING THE SPRING PINS (REF. #26) FOR REMOVAL OF THE SPRINGS.

⚠ CAUTION! THE TWO BOLTS (REF. #8) MUST BE TORQUED TO 50 FT. LBS.

BOOM FRAME (MULTI-PRO 1100)

Ref	Part No.	Description	Qty
1	42223	Tube Wedge Assy	2
2	22-15-AJFD	Lock Nut, 1/2 NC	4
3	42225	Cross Support Angle	1
4	20-86-AGD	HHCS, 1/2 NC x 1-1/4"	2
5	42258	Spacer Tube, 1-1/4" lg.	2
6	42222	Boom Mount Assy	1
7	42217	Boom Mount Assy	1
8	42199	HHCS, 1/2 NC x 18"	2
9	42234	Center Boom Angle	2
10	24-10-AD	Flat Washer, 5/16	4
11	22-12-AJD	Hex Nut, 5/16 NC	8
12	20-47-AGD	HHCS, 3/8 NC x 1"	2
13	24-11-AD	Flat Washer, 3/8	2
14	40493	Center Boom Pipe	1
15	40494	Clamp Assy	2
16	22-13-AJFD	Lock Nut, 3/8 NC	2
17	42227	Main Frame Tube-Welded Assy	1
18	42257	Spacer Tub, 1" Long	2
19	42711	Boom Support Assy - LH	1
20	42710	Boom Support Assy - RH	1
21	20-28-AGD	HHCS, 5/16 NC x 1-1/2"	2
22	42707	Support Bracket Assy	2

Ref	Part No.	Description	Qty
23*	24-18-BD	Flat Washer, 1" S.A.E.	2
24*	42196	Compression Spring	2
25*	42706	Breakaway Pivot Assy	2
26*	29-199-C	Spring Pin, 1/4 x 2"	2
27	24-10-BD	Flat Washer, 5/16 S.A.E.	2
28	25-25-AGD	Carriage Bolt, 5/16 NC x 3/4	2
29	22-11-AJFD	Lock Nut, 1/4 NC	16
30	42282	Extension Boom Pipe Assy	2
31	20-8-AGD	HHCS, 1/4 NC x 1-3/4"	8
32*	42243	Hinge Assy	2
33*	361011	Grease Fitting	2
34	28-18-D	Cotter Pin, 1/8 x 1"	6
35	42195	Clevis Pin, 1/2 x 2"	4
36	42240	Strut Assy	2
37	42194	Clevis Pin, 1/2 x 4-1/2"	2
38	301950	U-Bolt, 5/16 NC	2
39	20-97-AGD	HHCS, 1/2 NC x 4"	2
40	22-17-AJD	Hex Nut, 5/8 NC	4
41	42237	Adjustable Clevis Assy	2
42	92-0010	U-Bolt, 1/4 NC	4
43	24-9-AD	Flat Washer, 1/4	8
44	92-8420	Boom Cap	4

* Denotes parts that are available in an assembled unit.
Order #42840 Breakaway Assembly

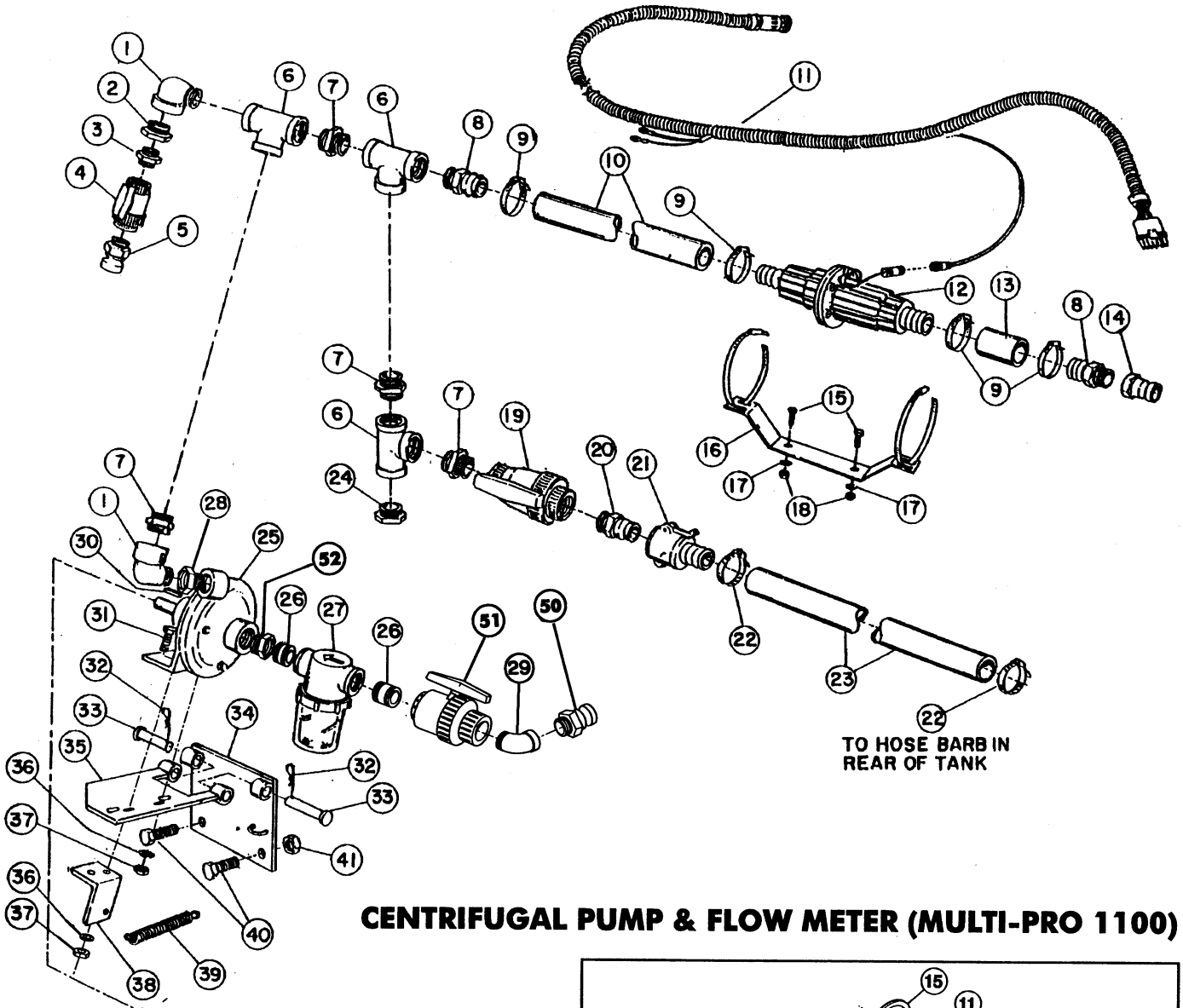

CENTRIFUGAL PUMP & FLOW METER (MULTI-PRO 1100)

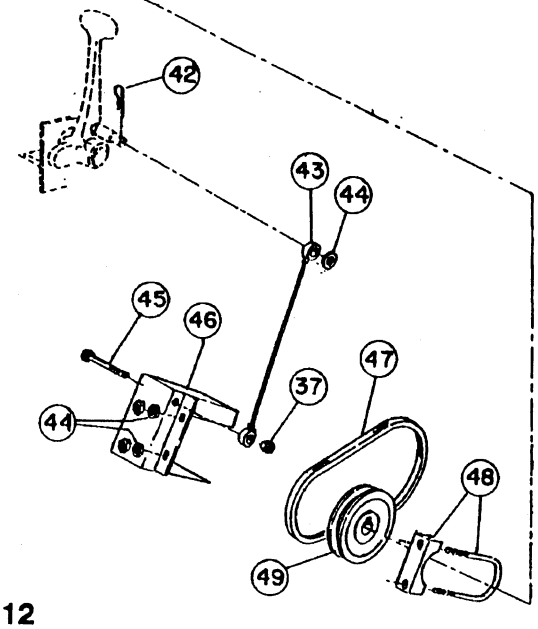

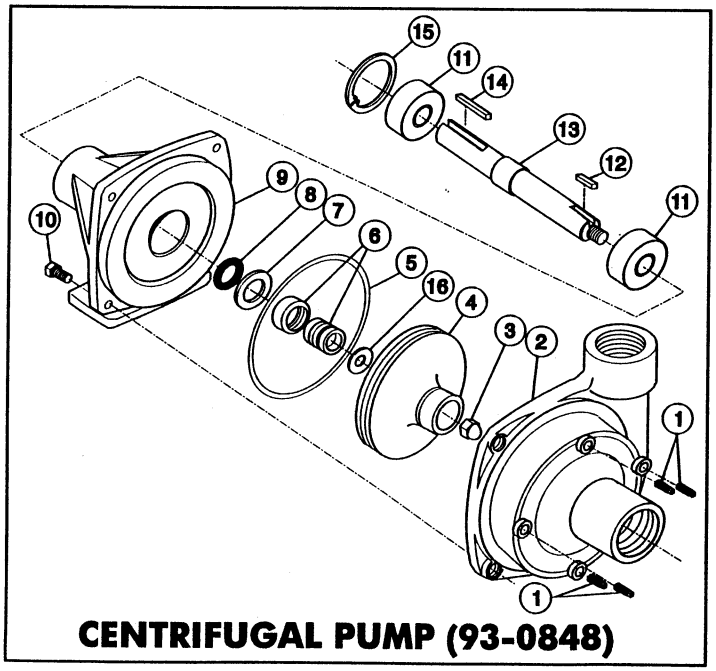

CENTRIFUGAL PUMP (93-0848)

CENTRIFUGAL PUMP & FLOW METER (MULTI-PRO 1100)

Ref	Part No.	Description	Qty
1	41307	90° St. Elbow, 1" NPT	2
2	41306	Reducer Bushing, 1" x 1/2" FPT	1
3	41314	Close Nipple, 1/2" NPT	1
4	40192	Ball Valve, 1/2" NPT	1
5	40486	Quick Adaptor x 1/2" MPT	1
	41317	Quick Adaptor Cap	1
6	41305	Tee, 1" NPT	3
7	41304	Close Nipple, 1" NPT	4
8	41308	Hose Barb, 1" MPT x 1-1/4" HB	2
9	41327	Hose Clamp	4
10	42996	Supply Hose, 1-1/4" x 18-1/8"	1
11	92-3687	Console Control Cable (13 ft.)	1
12	41482	Flow Meter	1
13	41320	Adaptor Hose, 1-1/4" x 3"	1
14	41316	Quick Adaptor x 1" FPT	1
	41318	Quick Adaptor Cap	1
15	20-26-AGD	HHCS, 5/16 NC x 1"	2
16	41483	Flow Meter Mounting Bracket	1
17	24-10-BD	Flat Washer, 5/16 SAE	4
18	22-12-AJD	Hex Nut, 5/16 NC	2
19	40020	Ball Valve, 1" NPT	2
20	40479	Quick Adaptor, 1" MPT	2
	41318	Quick Adaptor Cap	1
21	40480	Quick Coupler x 1" Hose Barb	2
22	21146	Hose Clamp	2
23	43016	Overflow Hose, 1" x 58"	1
24	41315	Hex Plug, 1 NPT	1
25	93-0848	Centrifugal Pump	1
26	92-0050	Close Nipple, 1-1/4" NPT	2

Ref	Part No.	Description	Qty
27	42701	Suction Strainer	1
	93-0687	Strainer Bowl (f/w 42701)	1
	42702	Strainer Screen (f/w 42701)	1
	42703	Strainer Gasket (f/w 42701)	1
28	92-0052	Reducing Bushing, 1-1/4 x 1" NPT	1
29	93-0897	45° St. Elbow, 1-1/4" NPT	1
30	92-0049	Square Key	1
31	20-49-AGD	HHCS, 3/8 NC x 1-1/2"	2
32	328967	Hair Pin Cotter	2
33	42195	Clevis Pin, 1/2 x 2	2
34	92-3782	Pump Mounting Plate	1
35	92-3771	Pump Pivot Plate Assy	1
36	24-11-AD	Flat Washer, 3/8	2
37	22-13-AJFD	Lock Nut, 3/8 NC	3
38	41720	Spring Mounting Angle	1
39	41721	Pump Spring	1
40	20-86-AGD	HHCS, 1/2 NC x 1-1/4"	2
41	22-15-AJFD	Lock Nut, 1/2 NC	2
42	328963	Hair Pin Cotter	1
43	42993	Pump Cable	1
44	24-11-BD	Flat Washer, 3/8 SAE	3
45	20-59-AGD	HHCS, 3/8 NC x 4"	1
46	41142	Pump Belt Cover	1
47	42989	Pump Drive Belt	1
48	20-4840	Belt Cover Clamp	1
49	40198	Pump Pulley	1
50	93-0888	Quick Adaptor, 1-1/4" MPT	1
	93-0853	Quick Adaptor Cap	1
51	93-0855	Ball Valve, 1-1/4"	1
52	42056	Reducing Bushing, 1-1/4x1-1/2"NPT	1

CENTRIFUGAL PUMP (93-0848)

Ref	Part No.	Description	Qty
1	42084	Drain Plug	4
2	93-0922	Pump Casting	1
3	42086	Impeller Nut	1
4	93-0923	Impeller (Polypropylene)	1
5	42089	O-Ring	1
6	42088	Mechanical Seal - Viton	1
7	93-0924	Seal Retainer	1
8	42092	Slinger Ring	1

Ref	Part No.	Description	Qty
9	93-0925	Mounting Flange	1
10	20-47-AGD	Bolt	4
11	93-0927	Ball Bearing	2
12	93-0928	Key	1
13	93-0929	Pump Shaft	1
14	93-0930	Key	1
15	42093	Bearing Retainer	1
16	93-0931	Gasket	1
*	94-8520	Seal Kit (Incl. O-ring & and Seal)	AR

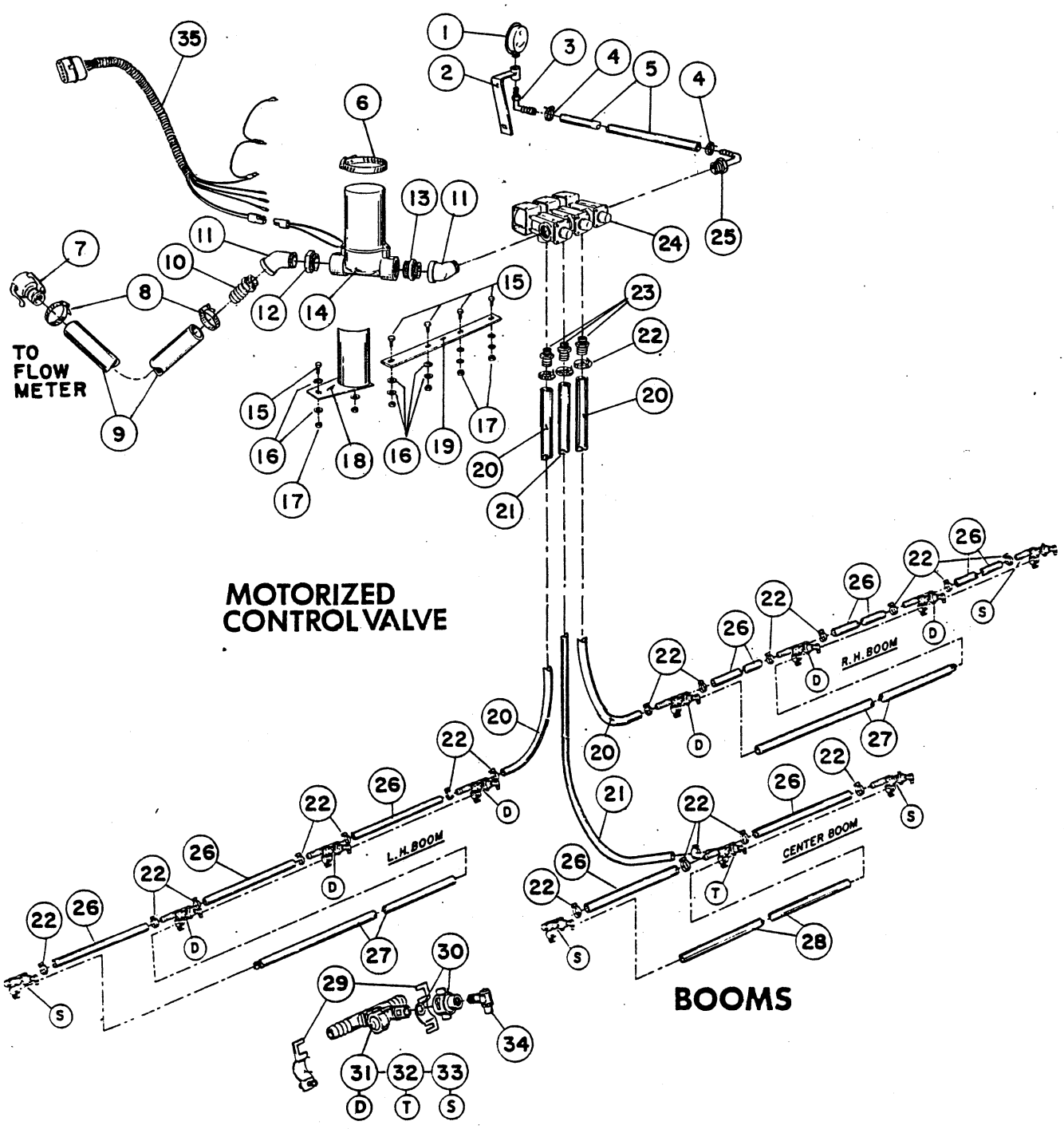
TO FLOW METER
MOTORIZED CONTROL VALVE
L.H. BOOM
R.H. BOOM
CENTER BOOM
BOOMS

MOTORIZED CONTROL VALVE & BOOMS (PRO-CONTROL™)

Ref	Part No.	Description	Qty
1	40485	Pressure Guage	1
2	42277	Guage Mounting Bracket	1
3	41292	90° Elbow, 1/4 MPT x 3/8 Barb	1
4	96609	Hose Clamp, 3/8 Hose	2
5	42276	Hose (Pressure Guage) 3/8 x 32"	1
6	92-0054	Hose Clamp, #48	1
7	40480	Quick Coupler, 1" Barb	1
8	21146	Hose Clamp, 1" Hose	2
9	42998	Flow Meter Hose, 1" x 24"	1
10	41730	Hose Barb, 3/4 MPT x 1" Barb	1
11	42939	45° St. Elbow, 3/4 NPT	2
12	43001	Reducer Bushing, 1" MPT x 3/4 FPT	1
13	41309	Reducing Nipple, 1" MPT x 3/4 MPT	1
14	41480	Motorized Control Valve	1
15	20-26-AGD	HHCS, 5/16 NC x 1"	6
16	24-10-BD	Flat Washer, 5/16 S.A.E.	16
17	22-12-AJD	Hex Nut, 5/16 NC	6
18	42999	Valve Bracket Assembly	1
19	41325	Solenoid Mounting Strap	1
20	41340	Boom Hose (Right & Left) 3/4 x 50"	2
21	42274	Boom Hose (Center) 3/4 x 36"	1
22	92-0045	Hose Clamp, 3/4 Hose	22
23	41313	Hose Barb, 1/2 MPT x 3/4 Barb	3

Ref	Part No.	Description	Qty
24	92-0355	Electric Solenoid Valve (100 P.S.I.)	1
	92-0356	Single Solenoid	AR
	92-0357	Seal Kit for 92-0356 Valve	AR
25	41295	90° Elbow 3/4 MPT x 3/8 Barb	1
26	40506	Jumper Hose, 3/4 x 19"	8
27	42282	Extension Boom Pipe Assy	2
28	40493	Center Boom Pipe	1
29	40999	Clamp Assy	11
30	40997	Adaptor Cap & Seat Gasket Assy	11
	40998	Seat Gasket (f/w 40997)	AR
31	41001	Nozzle Body & Check Valve (Double Barb)	6
32	41002	Nozzle Body & Check Valve (Triple Barb)	1
33	41000	Nozzle Body & Check Valve (Single Barb)	4
	41003	Diaphragm (f/w 41000, 41001 & 41002)	AR
34	40444	RA-10 Raindrop Nozzle (Std.)	11
	40223	RA-15 Raindrop Nozzle (Optional)	11
	41088	RA-6 Raindrop Nozle (Optional)	11
	42828	RA-8 Raindrop Nozzle (Optional)	11
35	92-3689	Flow Control Cable (3 Ft.)	1

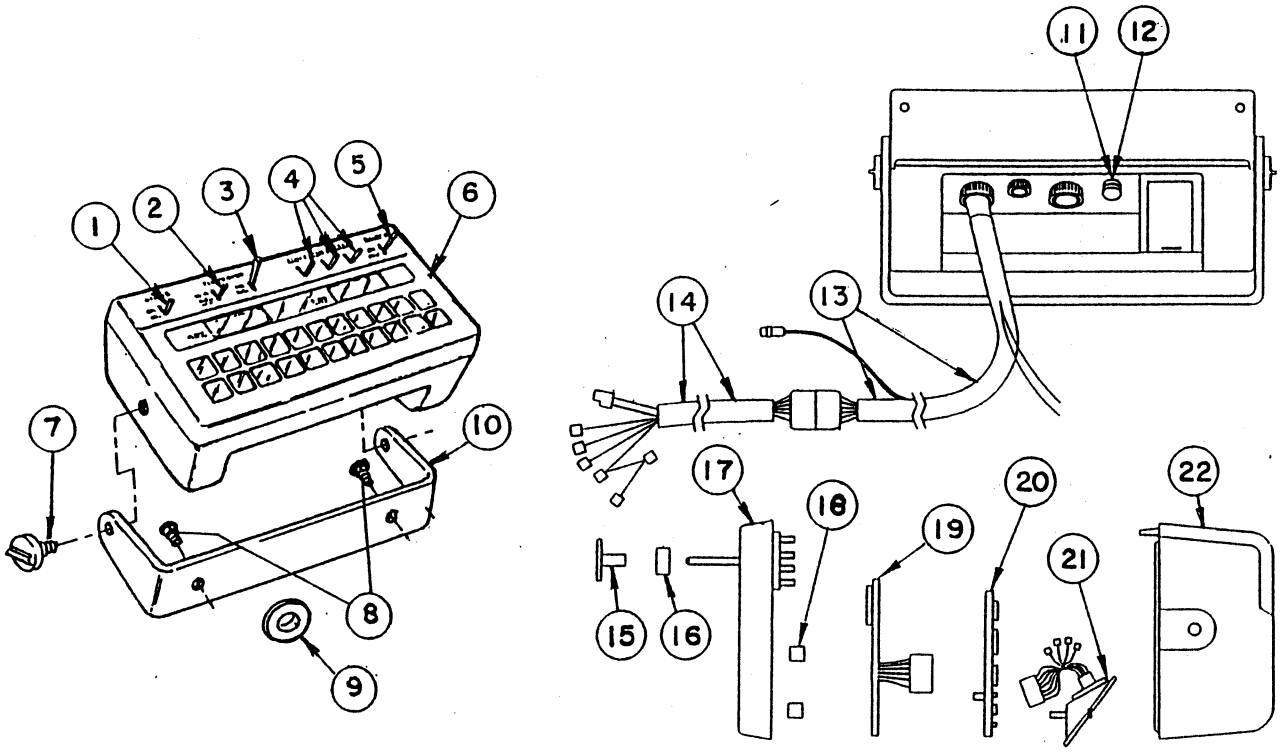

PRO-CONTROL™ CONSOLE (1100 MULTI-PRO)

Ref	Part No.	Description	Qty
1	42722	Power Switch	1
2	42723	Rate 1/ Rate 2/ Man. Switch	1
3	42724	Man. Adj. Switch	1
4	42558	Boom Switch	3
5	42725	Master Switch	1
6	41472	Control Console	1
	41344	Console Cover	1
7	41473	Mounting Knob	2
8	92-3911	Washer Hd. Screw, 1/4 NC x 3/4"	2
9	40764	Grommet	1
10	41474	Mounting Bracket	1
11	42715	Fuse Holder	1

Ref	Part No.	Description	Qty
12		Fuse-AGC 15	1
13	92-3687	Console Control Cable (13 ft.)	1
14	92-3689	Flow Control Cable (3 ft.)	1
15	93-0907	Switch Cover	1
16	93-0908	1-Set Filler Spacers	1
17	93-0909	Face Plate Assembly	1
18	93-0910	Display Board Spacer	1
19	93-0911	LCD Display Board	1
20	93-0912	Processor Board	1
21	93-0913	Connector Plate Assembly	1
22	93-0914	Back Assy.	1

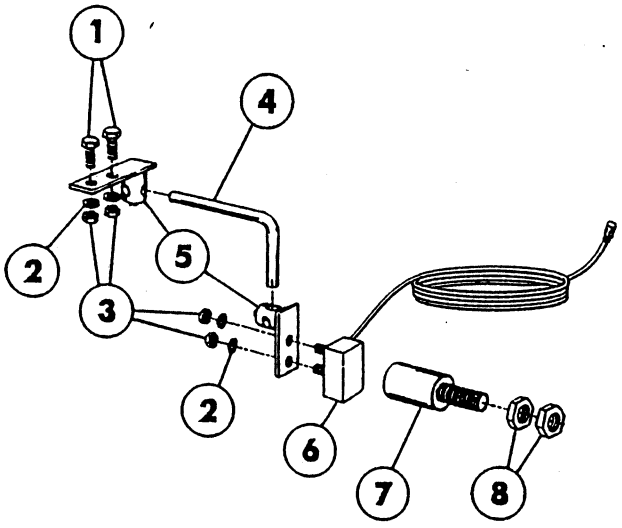

SPEED SENSOR

Ref	Part No.	Description	Qty
1	20-5-AD	HHCS, 1/4 NC x 1"	2
2	23-9-GD	Lock Washer, 1/4	4
3	22-11-AJD	Hex Nut, 1/4 NC	4
4	41479	Sensor Rod	1
5	41478	Turret Assembly	2
6	41477	Sensor Switch Assembly	1
7	41475	Magnet Assembly (Red)	2
	41476	Magnet Assembly (Black)	2
8	22-15-AJD	Hex Nut, 1/2 NC	8

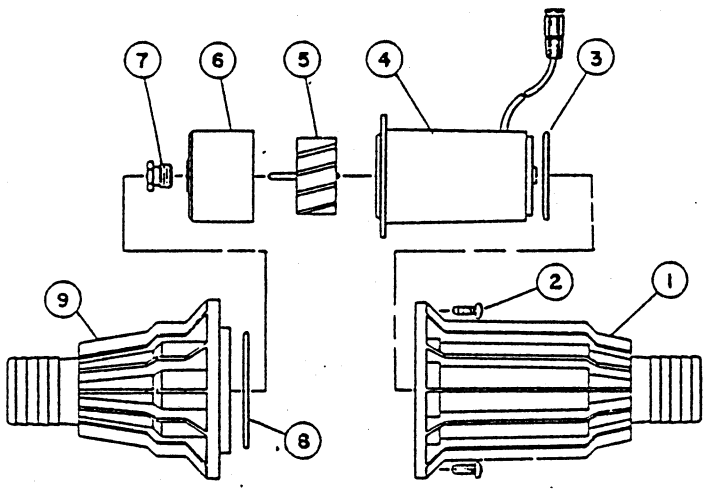

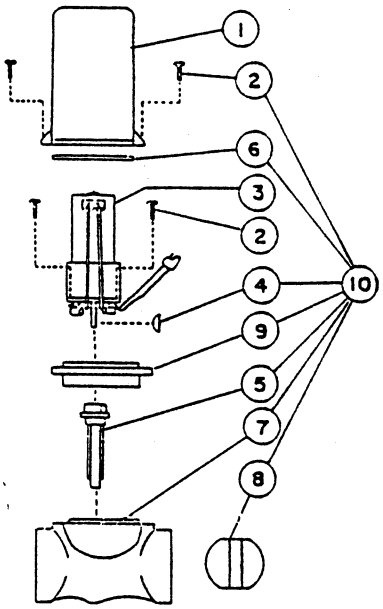

FLOW METER (41482)

Ref	Part No.	Description	Qty
1	42475	Sensor Housing	1
2	42476	#10–32 x 3/4 Screw (Stnl. Steel)	12
3	42468	O–Ring (Viton)	1
4	42477	Transducer Assy.	1
5	42478	Turbine	
6	42479	Turbine Hub/Bearing Assy	1
7	42480	Turbine Stud w/Bearing	1
8	42469	O–Ring (Viton)	1
9	42481	Hub Housing w/Inserts	1
10	41483	Mounting Bracket (Not Shown)	1

CONTROL VALVE (41480)

Ref	Part No.	Description	Qty
1	42318	Valve Cover	1
2	42482	#6–20 x 3/4 Thread Forming Screw	6
3	42483	Motor Assy	1
4	42484	Woodruff Key	1
5	42485	Coupler Shaft	1
6	42470	Seal (Tetraseal)	1
7		Valve Body	NS
8	42486	Butterfly	1
9	42487	Isolation Flange Assy	1
10	42488	Valve, Iso–Body Kit	AR

Ref	Part No.	Description	Qty
1	42126	Screw – Stainless Steel	2
2	92–0358	Jam Nut – Electroless Nickel Plated	1
3	92–0359	Coil Cover – Steel Epoxy Painted	1
4	92–0360	Armature Stop – Steel Electroless Nickel Plated	1
5	92–0361	Coil Ass'y – Nylon Encapsulated (black)	1
6	92–0362	Strap – Steel, Epoxy Painted	
7	92–0363	Washer – Stainless Steel	1
8	92–0364	Upper Diaphragm Housing – Nylon, Glass Filled	1 1
9	92–0365	Aramature – Steel, Electroless Nickel Plated	1
10	***	Spring – Type 302 Stainless Steel	1
11	92–0366	Retaining Ring – Steel, Electroless Nickel Plated	1
12	***	Diaphragm – Viton (optional)	2
13	92–3681	Seal Washer Retainer–Stainless Steel	1
14	***	Seal Washer – Viton (optional)	1
15	42136	Spacer – Stainless Steel	1
16	42137	Body – Polypropylene (black)	1
17	92–3682	Stem – Stainless Steel	1
18	42134	Washer – Stainless Steel	1
19	92–0367	Lower Diaphragm Piston – Stainless Steel	1
20	92–0368	Lower Diaphragm Housing – Glass Filled Nylon	1
21	42143	Screw – Stainless Steel	4
22	42884	Connecting Nipple – Nylon (black)	AR

*** Indicates parts included in Viton Seal Kit.
Order Part No. 92–0357

SOLENOID VALVE (92–0356)

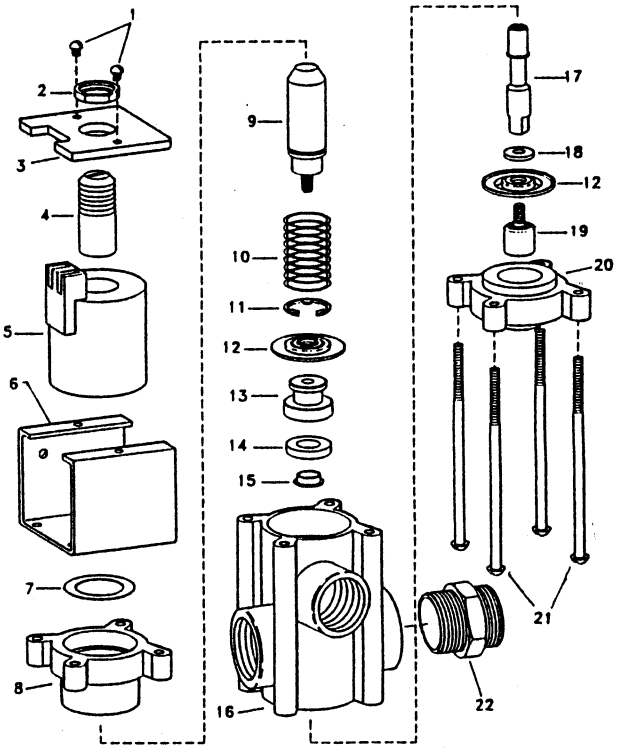

SAFETY AND INSTRUCTION DECALS

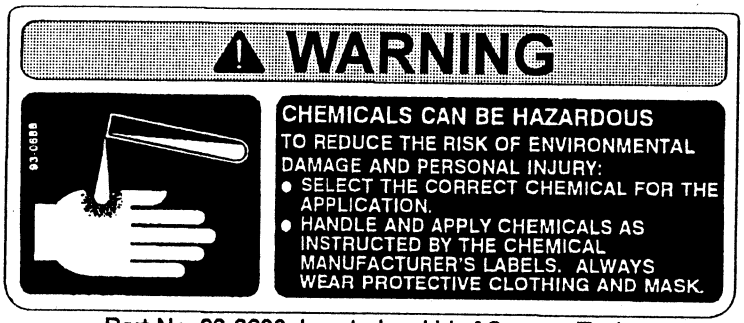

Part No. 93-0688: Located on Lid of Sprayer Tank.

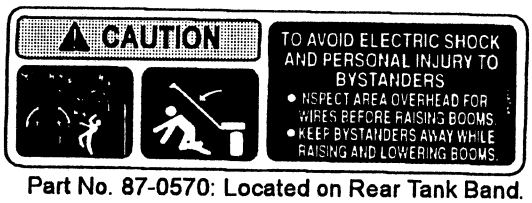

Part No. 87-0570: Located on Rear Tank Band.



Part No. 93-0800: Located on side of Clean Water Wash Tank Saddle.

NOTES



Helping you put quality into play.™