FORM NO.93-1051

TORO®

MODEL NO. 41122-50001 & UP
MODEL NO. 41020-50001 & UP
MODEL NO. 41021-50001 & UP
MODEL NO. 41128-50001 & UP
MODEL NO. 41120-50001 & UP

SET-UP AND PARTS CATALOG

STANDARD ELECTRIC SPRAY SYSTEM 1000 FOR THE MULTI-PRO™ 1100 VEHICLE

Refer to the illustrated Parts List for the details of parts used in assembling the Standard Electric Spray System.

NOTE: "Right", "Left", "Front", and "Rear" are referenced while seated in the operator's position.

TACHOMETER:

1. Remove four (4) 1/4" x 5/8" washer hd cap screws to remove the rear panel from the Steering Console.

2. Install the Tachometer to the right side of the Steering Column using two (2) #8 x 5/8" hex hd machine screws, lock washers, and hex nuts. See FIG.1.

3. Route the Tachometer Cable through the hole in the top of the Steering Console below the Tachometer and install Grommet into hole around Cable. See FIG. 1.

4. Install RPM to Speed Decal above Tachometer.

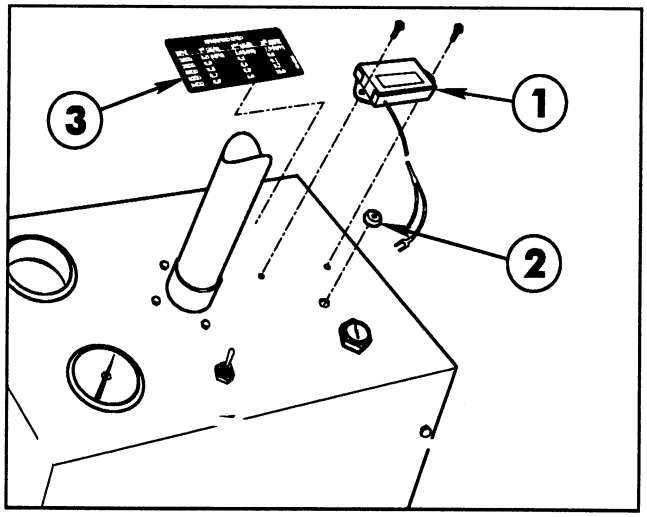

1. Tachometer
2. Grommet
3. Decal

5. Route the Cable through the "U" shaped bracket under the floorboard, and up into the engine area to the right of the Transmission.

6. Slip red wire over an insulated section of the Spark Plug Wire and wrap 4 turns. See FIG. 2.

IMPORTANT: Keep wire clear of extremely hot engine parts such as the muffler, etc.

7. Ground the spade terminal on the white wire to the Ground Terminal Block mounted inside the Seat Box. After the connections are made, coil up any excess wire and tie strap to a convenient area. See FIG. 2.

8. Reinstall Rear Panel.

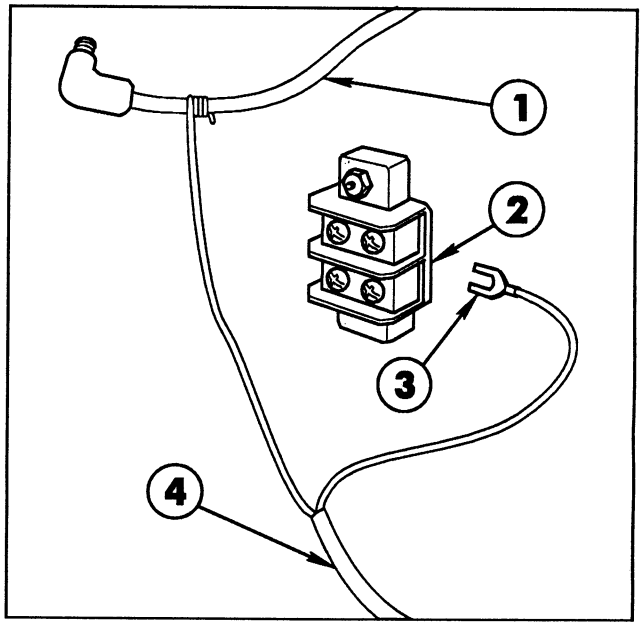

FIG. 2

1. Spark Plug Wire
2. Ground Terminal Block
3. Spade Terminal
4. Tachometer Cable

CONTROL CONSOLE:

1. Using two 1/4" hex washer hd screws, install the Mounting Bracket for the Console Control on the left side panel of the Seat Support.

2. Route the Cable Assembly along the rear of the seat support. Place an R-clamp around the Cable and secure it to the Seat Support with a 5/16" x 3/4" cap screw, flat washer and hex nut.

3. Route the Cable along the left side and to the rear of the Vehicle frame. Secure with plastic tie-straps.

©The Toro Company -1995
All Rights Reserved

4. Measure carefully and determine the length of white wire necessary to reach the Ground Terminal Block. Cut off the excess wire and crimp the spade terminal onto the stripped end. Connect the spade terminal to the Ground Terminal Block as shown in FIG. 3.

5. Measure carefully to determine the length of red wire necessary to reach the Fuse Block. Cut off excess wire and crimp the push-on terminal onto the stripped end. Connect the push-on terminal to the male terminal on the red wire from the Fuse Block, as shown in FIG. 3.

6. Insert the 20-amp fuse into the Fuse Block receptacle, as shown in FIG. 3.

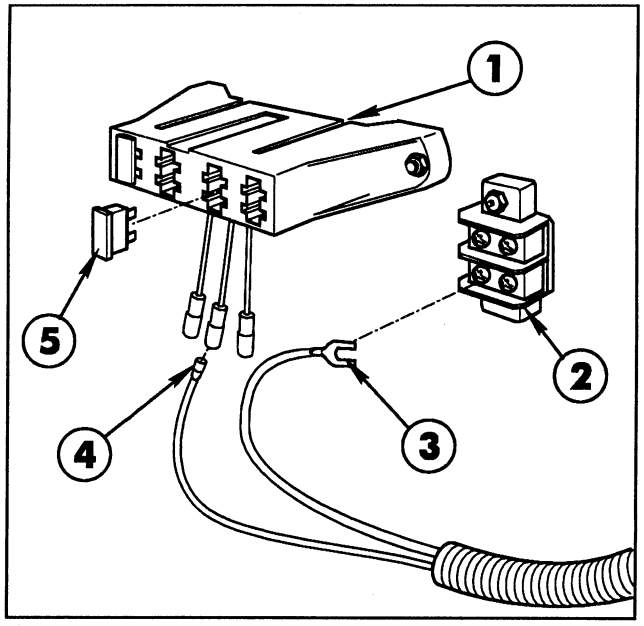

FIG. 3

1. Fuse Block
2. Ground Terminal Block
3. Spade Terminal
4. Push-on Terminal
5. Sprayer System Fuse (20 amp)

CENTRIFUGAL PUMP:

IMPORTANT! If the optional Rollover Protection Structure (ROPS) is to be installed on the Vehicle, it must be installed prior to installing the Centrifugal Pump. See the Installation Instructions furnished with the ROPS (model no. 41185); or the ROPS Adaptor Kit (part no. 92-8240).

1. Mount the Pivot Mounting Plate to the angle on the bottom of the Vehicle Frame, using two 1/2" x 1-1/4" cap screws and lock nuts. See FIG. 4.

2. Align the pivot tubes on the Pump Pivot Plate with those on the Pivot Mounting Plate. Insert the two (2) clevis pins and secure with two (2) hairpin cotters.

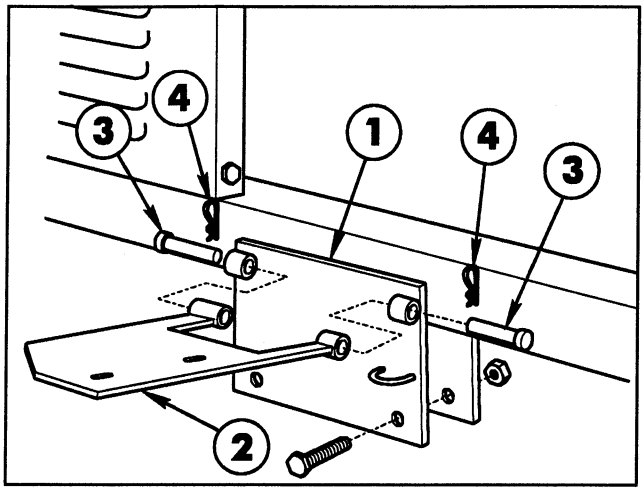

FIG. 4

1. Pivot Mounting Plate
2. Pump Pivot Plate
3. Clevis Pin
4. Hair Pin Cotter

NOTE: In the following instructions, "sealer" refers to RTV clear silicone.

3. Secure the Centrifugal Pump in a vise. Apply thread sealer and install the fittings to connect the Suction, Supply, and Agitator Hoses to the Pump as shown in FIG. 5.

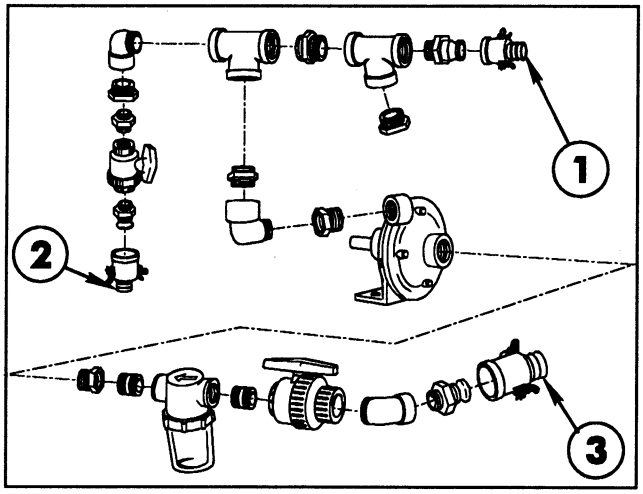

FIG. 5

1. Supply
2. Agitator
3. Suction

4. Assemble the Pump Drive Pulley onto the Pump shaft with the Pulley's **hub** facing **away** from the Pump.

5. Assemble the Centrifugal Pump and the Spring Mounting Angle to the Pump Pivot Plate, using two (2) 3/8" x 1-1/2" cap screws, flat washers, and lock nuts as shown in FIG 6.

6. Using a straight edge as a guide, position the Pump Pulley so that it is in alignment with the

Engine's Drive Pulley. When alignment is correct, tighten the two (2) set screws in the Pump Pulley's hub.

7. Install the Pump Drive Belt around the Pump and Engine drive Pulley.

8. Loosely mount the Pump Belt Cover to the Pump hub with the Pump Cover Clamp and the two (2) 5/16" flat washers, lock washers, and hex nuts. See FIG. 6.

9. Insert the 3/8" x 4" cap screw through the Pump Cover and into the hole in the Pump Cable's end fitting. Secure the Cable to the Cover with a 3/8" lock nut.

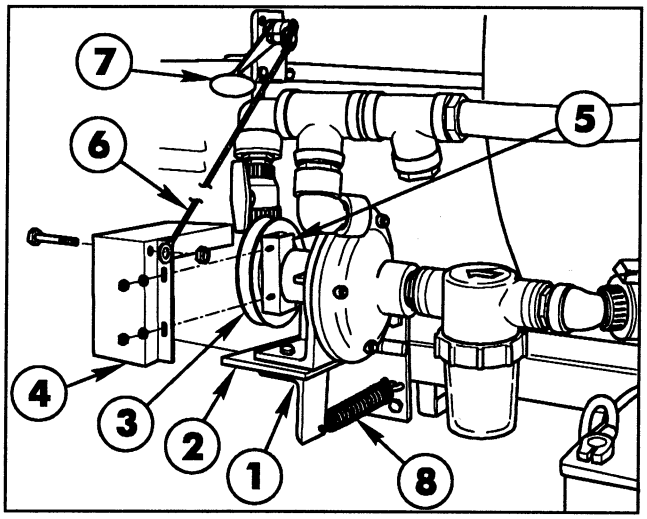

FIG. 6

1. Spring Mounting Angle
2. Pump Pivot Plate
3. Pump Pulley
4. Pump Belt Cover
5. Pump Cover Clamp
6. Pump Cable
7. Accessory Control Lever
8. Pump Spring

10. Remove the hair pin cotter and flat washer from the pin in the Accessory Control Lever. Push the Control Lever down (engaged). Slide the unattached end of the Cable onto the pin and secure with the flat washer and hair pin cotter previously removed.

11. Connect one end of the Pump Spring to the ring on the Pump Pivot Plate and the other end through the hole on the Spring Mounting Angle.

12. Engage the Accessory Control Lever...DO NOT START ENGINE! Adjust the Belt Guide to obtain 1/8" clearance between the inside of the Guide and the Belt.

13. Rotate the Belt Cover around the Pump hub until the tension on the Pump Control Cable requires a small amount of pressure to snap the Control lever "over-center" to disengage the Pump drive. Make sure there is 1/8" clearance between the Belt and the inside of the Belt Cover. Tighten the lock nuts after adjustment is complete.

If step 13 does not achieve the necessary tension on the Control Cable, loosen the Pump mounting bolts and slide the Pump on the Pivot Plate away from the Vehicle Frame, increasing the Cable tension.

TANK ASSEMBLY:

1. Cut the shipping straps and remove the Spray Tank and Saddle Assembly from the shipping skid.

NOTE: In the following instructions, sealer refers to RTV clear silicone when used for pipe fittings.

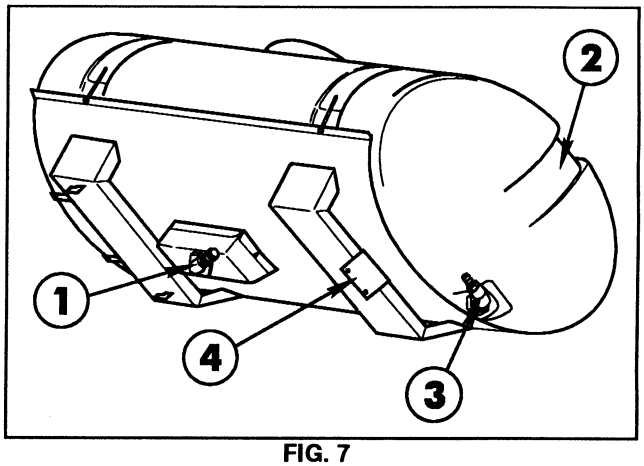

FIG. 7

1. Barbed Elbow (Suction)
2. Spillway
3. Elbow & Hose Barb (Overflow)
4. Mounting Member

2. Apply thread sealer and install the 90° barbed elbow into the bottom of the Spray Tank.

3. Attach 1-1/4" x 25" Suction Hose to the barbed elbow in the bottom of the Tank with a hose clamp. Attach 1-1/4" barbed female quick coupler to the other end of the Suction Hose and secure with a hose clamp.

4. Attach 1/2" x 42" Agitator Hose to the 1/2" barbed elbow in the front of the Tank with a hose clamp. Attach 1/2" barbed female quick coupler to the other end of the Agitator Hose and secure with a hose clamp.

5. Apply thread sealer and install the 90° street elbow and a male quik coupler into the fitting at the rear ("spillway") of the Tank.

6. Place the Tank and Saddle Assembly on the Vehicle Frame.

7. Slide the Tank and Saddle forward, to hook the two lugs on the front of Saddle under the Vehicle's cross member, resting the angle under the rear Saddle over the Vehicle's rear cross member.

8. Secure the Mounting Member to the Vehicle's cross member with two (2) 1/2" x 1-1/2" cap screws, flat washers, lock washers and hex nuts.

9. Route the Suction Hose over the left side of the Vehicle Frame and connect the couplers at the Suction Ball Valve.

10. Route the Agitator Hose over the Vehicle Frame and under the Pump to connect the couplers at the Agitator Ball Valve.

BOOM HOLD-IN ASSEMBLY:

1. Mount right Hold-In Brace assembly to the two (2) 5/16" carriage bolts in the front Tank Band using two (2) 5/16" flat washers and hex nuts. Tighten securely. See FIG. 8.

2. Attach right Boom Hold-In assembly to Hold-In Brace assembly using two (2) 1/4" U-bolts and four (4) 1/4" lock nuts. Attach Rubber Hold-Down to Hold-In Brace assembly. Repeat steps 1 and 2 for left side.

3. Mount Wash Tank Bracket (open end forward) to right-hand Hold-In Brace assembly using two (2) 5/16" x 1" hex hd. cap screws, flat washers, and hex nuts. Place Clean Water Wash Tank into Wash Tank Bracket and secure with Rubber Hold-Down, as shown in FIG. 8.

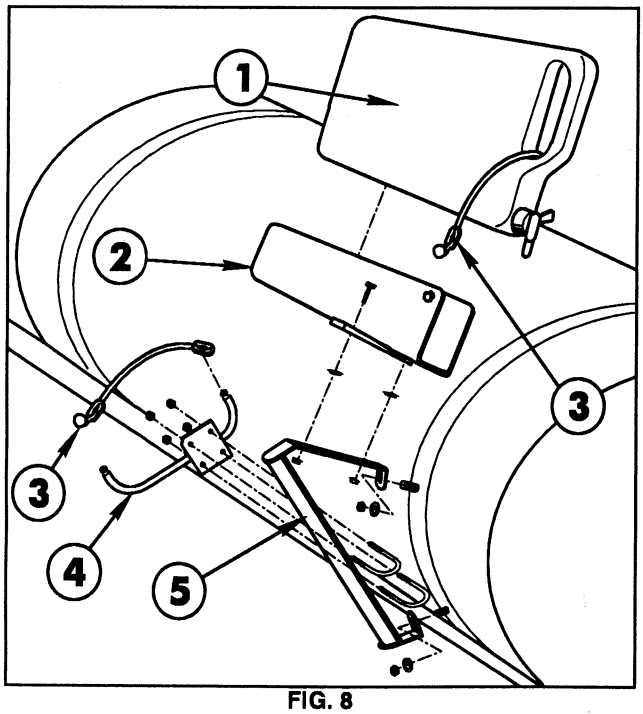

FIG. 8

1. Clean Water Wash Tank
2. Wash Tank Bracket
3. Rubber Hold-Down
4. Boom Hold-In Ass'y
5. Hold-In Brace Ass'y

BOOM FRAME ASSEMBLY:

1. Apply a heavy coating of grease to the tubes of the two Boom Mount Assemblies and insert them into the Vehicle frame as shown in FIG 9.

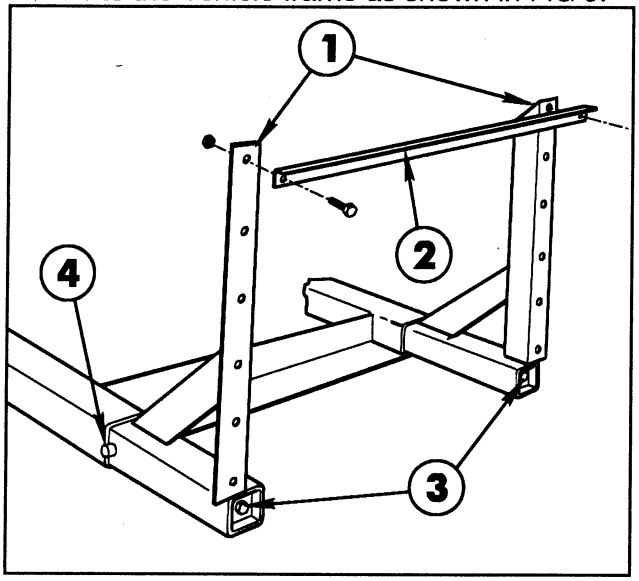

FIG. 9

1. Boom Mount Assembly
2. Cross Support Angle
3. Wedge Screw
4. Stop Pin

NOTE: Note the position of the angle member of the Boom Mount Assemblies in relation to the tube member. They must be positioned as shown for the mounting of the Cross Support Angle.

Steps 2 and 3 apply to the assembly of the Standard Boom only. If the optional "Boom Pivot Kit" is to be installed, see the instructions furnished with that kit. The Cross Support to be used with that kit is different than the Support used on the Standard Boom.

2. Position the Cross Support Angle and attach it to the Boom Mount Assemblies with two 1/2" x 1-1/4" hex hd cap screws and lock nuts.

3. Position the Spacer Tubes between the Boom Mount uprights and the lugs on the Main Frame Tube. Use two 1/2" x 4" hex hd cap screws and lock nuts to secure the Main Frame Tube to the uprights. See FIG. 10.

4. Using a torque wrench, tighten the 1/2" x 18" screws that join the Wedges to the Boom Mounts. Tighten to 50 ft. lbs.

5. Position the two (2) Center Boom angles on the Main Frame and secure them to the Main Frame tube with two (2) square U- bolts, four (4) flat washers and hex nuts. See FIG 10.

6. Center and attach the Center Boom Pipe to the two Center Boom Angles with two (2) clamps, 3/8" x 1" cap screws, flat washers and lock nuts.

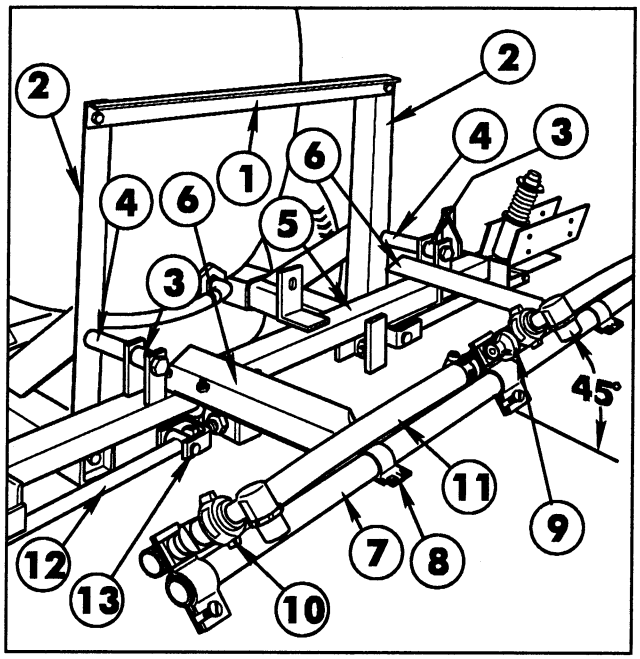

FIG. 10

1. Cross Support Angle
2. Boom Mount Assy.
3. Spacer Tube, 1" lg.
4. Spacer Tube, 1-1/4" lg.
5. Main Frame Tube
6. Center Boom Angle
7. Center Boom Pipe
8. Boom Clamp
9. Triple Barb Nozzle Body
10. Single Barb Nozzle Body
11. Jumper Hose
12. Strut Assembly
13. Adjustable Clevis

7. Loosely attach the triple barb Nozzle Assembly in the approximate center of the Center Boom Pipe. For the most uniform spray coverage, position all Nozzle Assemblies at a 45° angle as shown in FIG 10. Tighten clamp screw to secure the Nozzle Body to the Boom Pipe.

8. Loosely attach a single barb Nozzle Assembly to each end of the Center Boom Pipe. Place two hose clamps on the two 3/4" x 19" Jumper Hoses and connect the single barb Nozzle Bodies to the triple barb Nozzle Body. Tighten all fasteners securely.

9. Attach the two Strut Assemblies to the two Adjustable clevis' found on each side of the Main Frame tube with two (2) 1/2" x 2" clevis pins and two (2) 1/8" x 1" cotter pins.

10. Insert the plugged end of an Extension Boom Pipe into the Pivot Assembly and secure with four (4) 1/4" x 1-1/4" cap screws and lock nuts. See FIG 11. Repeat on the opposite side to assemble the other Extension Boom.

IMPORTANT! DO NOT over-tighten the nuts in steps 10 and 12. The clamping action could crush the Boom Pipe.

11. Attach the Boom Support Assembly to the Pivot Assembly, using a 5/16" x 1-1/2" cap screw and lock nut. See FIG. 11.

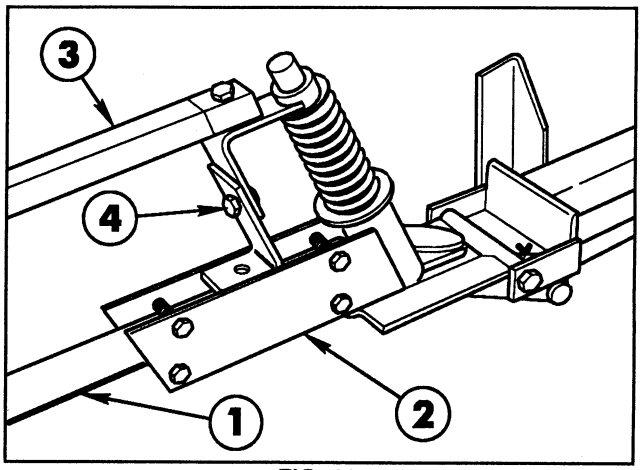

FIG. 11

1. Extension Boom Pipe
2. Pivot Assembly
3. Boom Support Assembly
4. Height Adjustment

12. Secure the two plates of the Boom Support Assembly to one of the Extension Boom Pipes, using two (2) 1/4" U-bolts, four (4) lock nuts and flat washers. See FIG. 12.

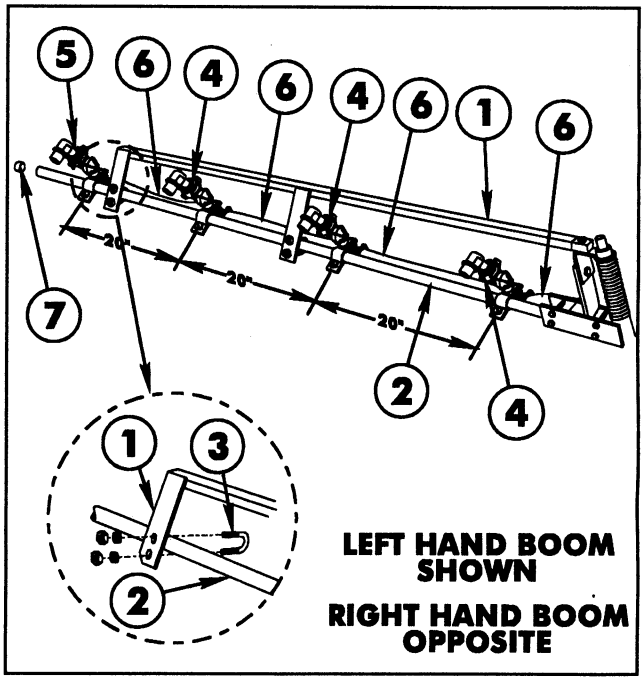

FIG. 12

1. Boom Support Assembly
2. Extension Boom Pipe
3. U-bolt
4. Double Barb Nozzle Body
5. Single Barb Nozzle Body
6. Jumper Hose
7. Boom cap

13. Assemble the Boom Support Assembly to the other Extension Boom Pipe.

14. Adjust the Booms to a level position by adjusting the jam nuts on the adjustable clevis assemblies (See FIG. 10) to the desired position, then tighten the end nuts against the Main Frame Plate.

15. Attach three double barb and one single barb Nozzle Bodies with Clamp Assemblies on each Extension Boom Pipe as shown in FIG. 12. Nozzles are to be spaced on 20" centers. Connect the Nozzle Assemblies with the 3/4" x 19" Jumper Hose and 3/4" x 21" Jumper Hose. Secure with hose clamps.

16. Install the plastic Boom Caps over the ends of the Boom Pipes.

17. Recheck and tighten all fasteners and hose clamps securely.

CONTROL VALVE/SOLENOID ASSEMBLY:

1. Apply thread sealer and assemble all components of the Valve and Solenoid Assemblies as shown on page 8.

2. Loosely attach the Control Valve Bracket to the Cross Support with a 5/16" x 3/4" cap screw, flat washer and nut.

3. Slide the Solenoid Mounting Strap into position and mount the complete Control Valve and Solenoid Assembly to the Cross Support as shown in FIG 13. Use four (4) 5/16" x 1" hex hd cap screws with washers below the screw head, the Strap and the Cross Support.

4. Attach 1" x 29" Overflow Hose to the hose barb with a hose clamp. Attach 1" barbed female quick coupler to the other end of the Overflow Hose and secure with a hose clamp.

5. Connect the Overflow Hose to the Quick Coupler in the rear of the Tank.

6. Connect the push-on terminals to the Solenoids and connect the plugs on the Control Valve and the Console Cable with the blue wire connecting to the left Boom, the brown wire going to the middle Boom, and the black wire going to the right Boom. See page 12.

7. Assemble the 1/4" male fitting to the reducer bushing in the end of the Solenoid Valve and connect the Gauge Tube.

8. Connect the Boom Feeder Hoses to the barbs in the Solenoid with hose clamps. The two 3/4" x 50" Hoses are to be attached to the left and right Solenoids. The 3/4" x 36" Hose is to be attached to the center Solenoid.

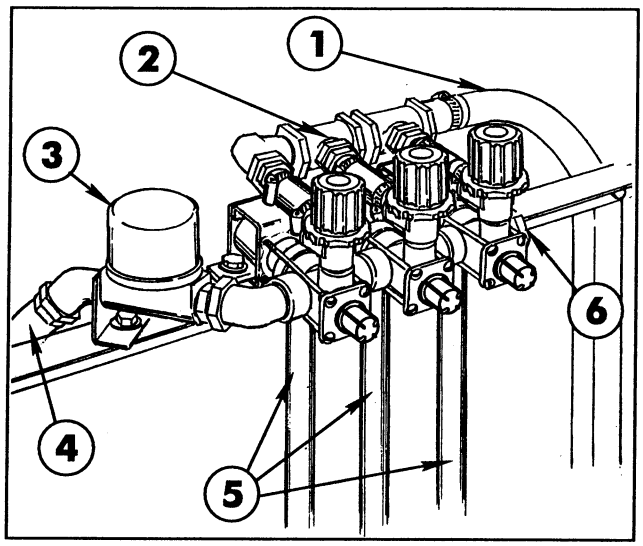

FIG. 13

1. Overflow Hose
2. Solenoid Assembly
3. Control Valve
4. Supply Hose
5. Feeder Hoses
6. Gauge Tube Fitting

8. Place a hose clamp on the center Boom Feeder Hose and attach it to the triple barb Nozzle on the Center Boom Pipe.

9. Place a hose clamp on the right and left Boom Feeder Hoses and attach them to the double barb Nozzles on the right and left Extension Boom Pipes.

Fill the Tank with clean water and check for any leaks.

Refer to the Standard Electric Spray System Operator's Manual for the proper calibration and operation of the Standard Electric Spray System.

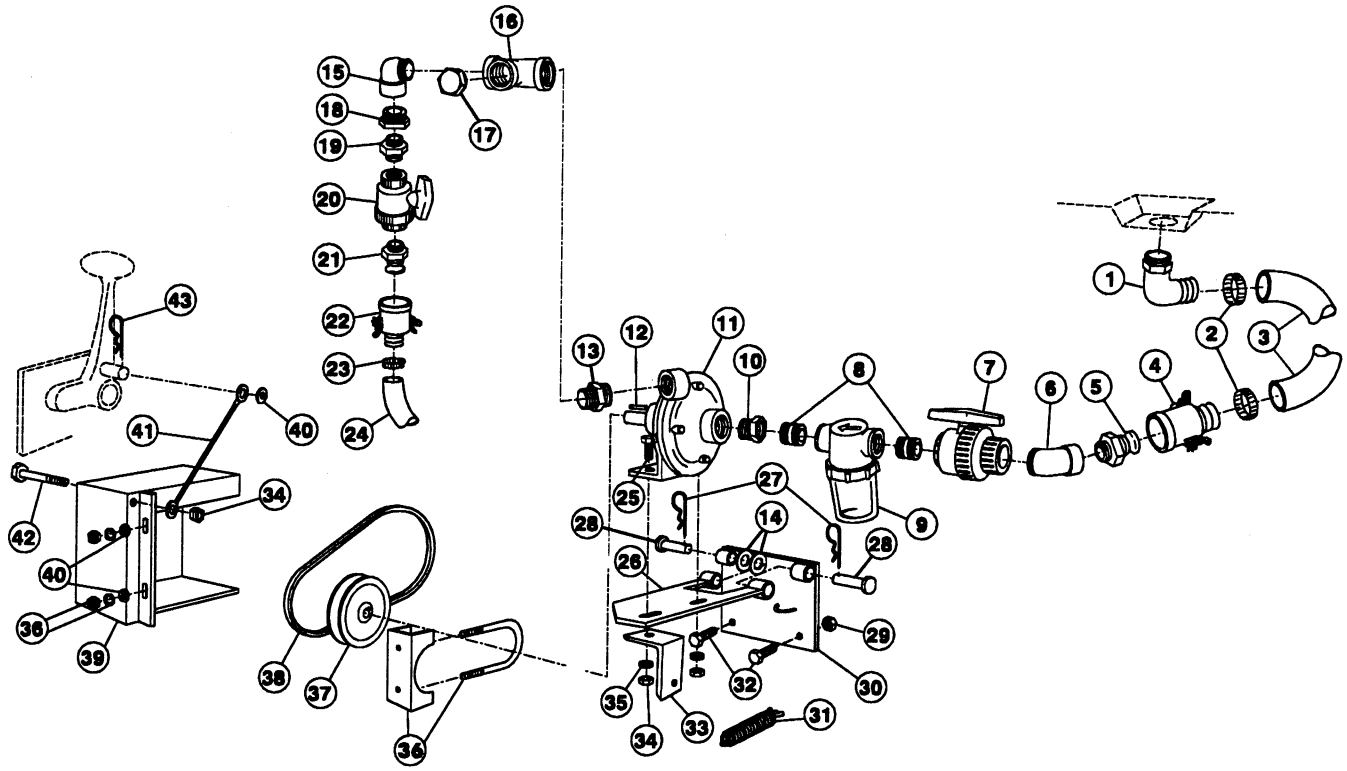

STANDARD ELECTRIC SPRAY SYSTEM PUMP SET-UP

Ref	Part No.	Description	Qty
1	93-0856	90° Elbow 1-1/4 NPT	1
2	41327	Hose Clamp	2
3	93-0858	Suction Hose 1-1/4 x 25	1
4	93-0854	Quick Coupler x 1-1/4 Hose Barb	1
5	93-0888	Quick Barb x 1-1/4 Male NPT	1
	93-0853	Quick Coupling Dust Cap	1
6	93-0897	St. Elbow 1-1/4 x 45°	1
7	93-0855	Ball Valve, x 1-1/4 NPT	1
8	92-0550	Close Nipple, 1-1/4 NPT	2
9	42701	Suction Strainer	1
10	42056	Red. Bushing, 1-1/4 x 1-1/2 NPT	1
11	93-0848	Centrifugal Pump	1
12	92-0049	Square Key	1
13	42992	Reducing Nipple	1
14	23-13-BD	Flat Washer, 1/2"	AR
15	41307	90° St. Elbow	1
16	92-8416	Cross, 1" FPT	1
17	41315	Hex Plug	1
18	41306	Reducing Bushing, 1 x 1/2 NPT	1
19	41314	Close Nipple	1
20	40192	1/2 NPT Ball Valve	1
21	40486	Quick Barb x 1/2 Male NPT	1
	41317	Quick Coupler Dust Cap	1

Ref	Part No.	Description	Qty
22	40487	Quick Coupler x 1/2 Hose Barb	1
23	96609	Hose Clamp	2
24	42946	Agitator Hose	1
25	20-49-AGD	HHCS, 3/8 NC x 1-1/2	2
26	92-3771	Pump Pivot Plate Assy.	1
27	328967	Cotter Hair Pin	2
28	42195	Clevis Pin	2
29	22-15-AJFD	Lock Nut, 1/2 NC	2
30	92-3782	Pivot Mount Plate Assy.	1
31	4172	Pump Spring	1
32	20-86-AGD	HHCS, 1/2 NC x 1-1/4	2
33	41720	Spring Mounting Angle	1
34	22-13-AJFD	Lock Nut, 3/8 UNC	3
35	24-11-AD	Flat Washer, 3/8 USS	2
36	20-4840	Muffler Clamp	1
37	40198	Pump Sheave	1
38	42989	Pump Drive Belt	1
39	41142	Pump Belt Cover Assy.	1
40	24-11-BD	Flat Washer, 3/8 SAE	3
41	42993	Pump Cable	1
42	20-59-AGD	HHCS, 3/8 UNC x 4	1
43	328963	Hair Pin	1

CONTROL VALVE & BOOMS

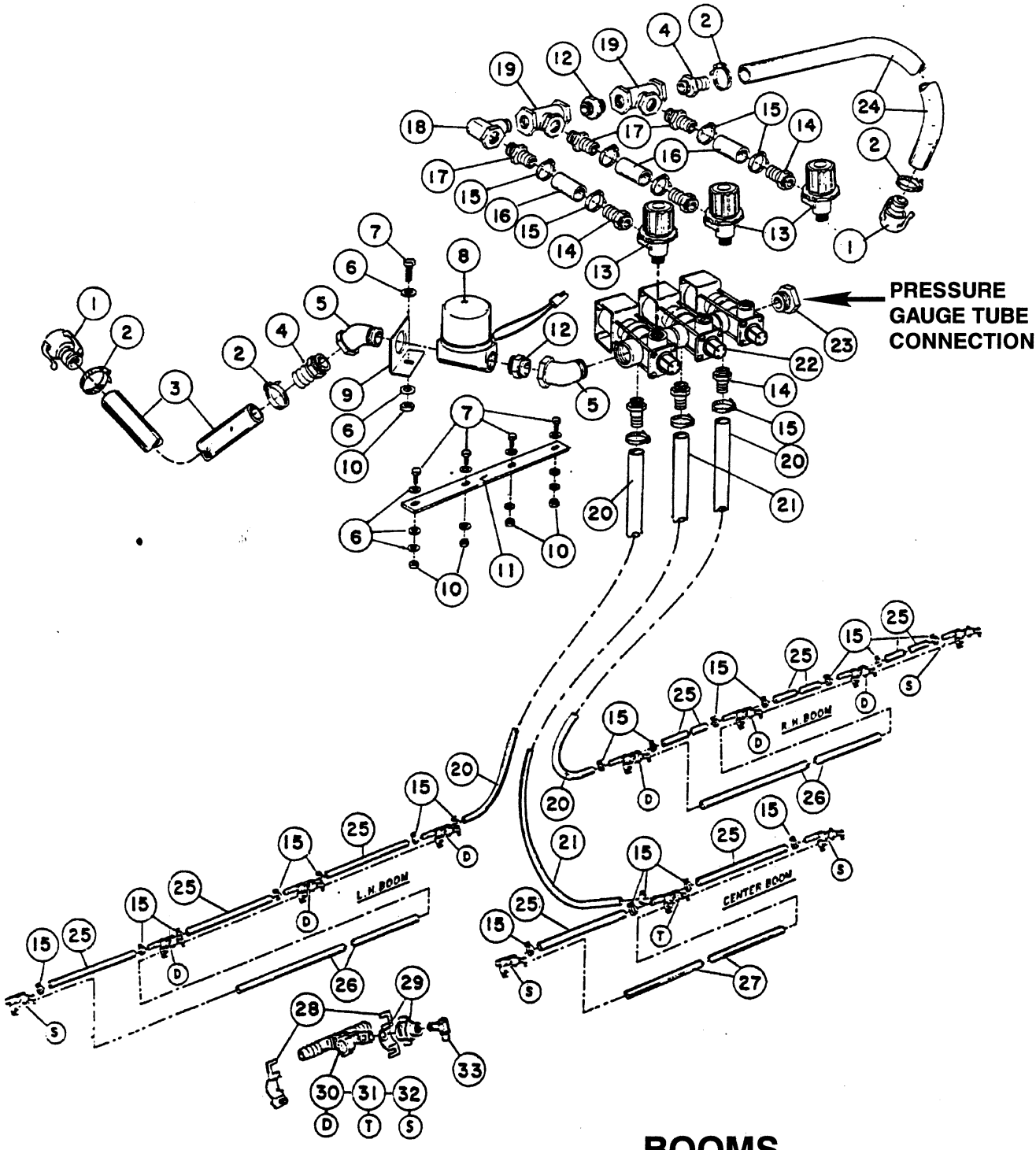

BOOMS

CONTROL VALVE & BOOMS

Ref	Part No.	Description	Qty
1	40480	Quick Adaptor x 1" H.B.	2
2	21146	Hose Clamp	4
3	42994	Supply Hose, 1" ID x 53"	1
4	41730	Hose Barb, 3/4" MPT x 1" HB	2
5	42939	45 St. Elbow, 3/4" NPT	2
6	24-10-BD	Flat Washer, 5/16 S.A.E.	11
7	20-26-AGD	H.H.C.S. 5/16 NC x 3/4	5
8	42936	Control Valve	1
9	42938	Control Valve Mounting Bracket	1
10	22-12-AJD	Hex Nut, 5/16 NC	5
11	41325	Solenoid Valve Mounting Strap	1
12	41294	Close NIpple, 3/4" NPT	2
13	42872	Throttling Valve	3
14	41313	Hose Barb, 1/2" MPT x 3/4" HB	6
15	6350	Hose Clamp	9
16	42944	Connector Hose, 3/4" ID x 2-1/2"	3
17	41257	Hose Barb, 3/4" MPT x 3/4" HB	3
18	42940	St. Elbow, 3/4" NPT	1
19	42941	Tee, 3/4 NPT	2
20	41340	Boom Hose, Right & Left	2
21	42274	Boom Hose, Center	1
22	42870	Solenoid By-Pass Valve	1
	42871	Single Solenoid	AR

Ref	Part No.	Description	Qty
	41611	Seal Kit for Solenoid	AR
23	41310	Reducer Bushing, 3/4 MPT x 1/4 FPT	1
24	40165	Overflow Hose, 1" ID x 29"	1
25	40506	Jumper Hose, 3/4 x 19"	8
26	42282	Extension Boom Pipe Assy	2
27	40493	Center Boom Pipe	1
28	40999	Clamp Assembly	11
29	40997	Adaptor Cap & Seat Gasket Assy	11
	40998	Seat Gasket (f/w 40997)	AR
30	41001	Nozzle Body & Check Valve (Double Barb)	6
31	41002	Nozzle Body & Check Valve (Triple Barb)	1
32	41000	Nozzle Body & Check Valve (Single Barb)	4
	41003	Diaphragm (f/w 41000, 41001 & 41002)	AR
33	40444	RA-10 Raindrop Nozzle (Std.)	11
	40223	RA-15 Raindrop Nozzle (Optional)	11
	41088	RA-6 Raindrop Nozzle (Optional)	11
	42828	RA-8 Raindrop Nozzle (Optional)	11

STANDARD ELECTRIC SPRAY SYSTEM TANK (MULTI-PRO 100)

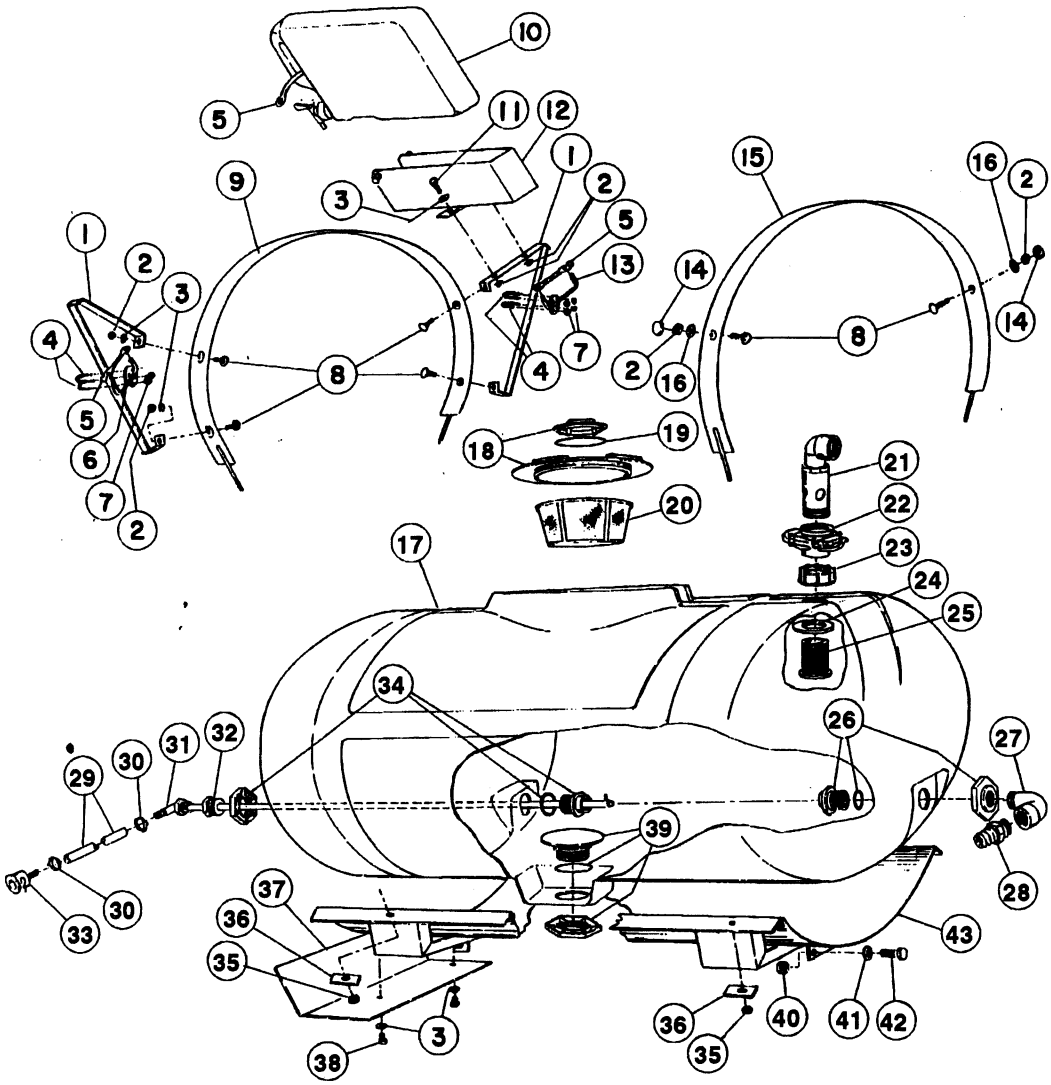

TACHOMETER

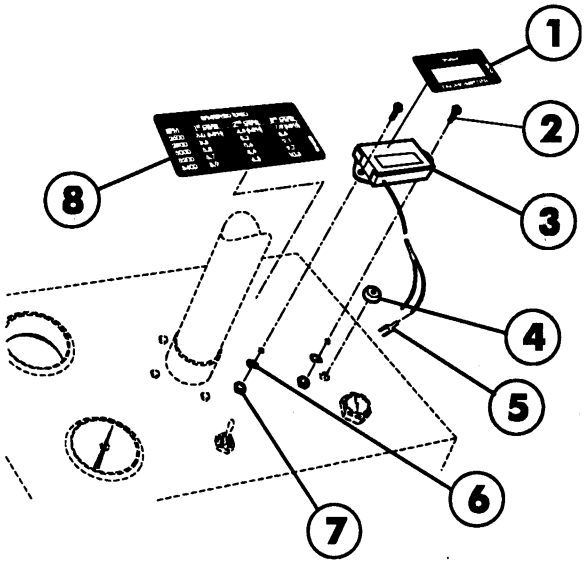

STANDARD ELECTRIC SPRAY SYSTEM TANK (MULTI-PRO 1100)

Ref	Part No.	Description	Qty
1	42983	Hold-In Brace Assembly	2
2	3217-6	Hex Nut, 5/16 NC	6
3	3256-23	Flat Washer, 5/16	4
4	92-0010	U-Bolt, 1/4 NC	4
5	42198	Rubber Hold-Down	3
6	42259	Boom Hold-In Assembly (left)	1
7	32153-4	Lock Nut, 1/4 NC	8
8	3230-1	Carriage Bolt, 5/16 NC x 3/4	6
9	42880	Tank Band Assembly (front)	1
10	92-3976	Clean Water Wash Tank	1
	93-0828	Spigot (f/w 92-3976 Tank)	1
11	322-5	HHCS, 5/16 NC x 1"	2
12	92-3969	Wash Tank Bracket	1
13	42316	Boom Hold-In Assembly (right)	1
14	42452	Protective Cap	2
15	43013	Tank Band Assembly (rear)	1
16	3253-4	Lock Washer, 5/16	2
17	42879	Tank Assembly - 160 Gals.	1
18	42322	Tank Lid (f/w Tank Assy.)	1
	92-3765	Vent Cap	1
19	42859	Breather Gasket (f/w Tank Assy.)	1
20	42323	Filler Basket (f/w Tank Assy.)	1
21	43069	Stand Up Assembly	1
22	43064	Knife Valve	1

Ref	Part No.	Description	Qty
23	43068	Fly Nut, 2" NPT	1
24	43067	Sealing Washer	1
25	43066	Bulk Head, 2" NPT	1
26	41800	Tank Fitting, 1" NPT (f/w Tank Assy)	1
27	41307	90° St. Elbow, 1" NPT	1
28	41308	Hose Coupling, 1" MPT x 1-1/4" HB	1
29	42946	Agitator Hose, 1/2" x 42"	1
30	96609	Hose Clamp	2
31	42981	Agitator Tube Assembly	1
	42842	Barbed Elbow	1
32	41969	Reducer Bushing, 3/4" MPT x 1/2" FPT	1
33	40487	Female Quick Coupler, 1/2" HB	1
34	41801	Tank Fitting, 3/4" NPT (f/w Tank Assy)	1
35	3217-7	Hex Nut, 3/8" NC	4
36	43014	Backing Strap	4
37	92-3525	Heat Shield	1
38	322-3	HHCS, 5/16 NC x 3/4	2
39	41798	Anti Vortex Fitting, 1-1/4" NPT	1
40	3217-9	Hex Nut, 1/2" NC	2
41	3253-7	Lock Washer, 1/2"	2
42	325-5	HHCS, 1/2 NC x 1-1/4"	2
43	42878	Tank Saddle Assembly	1

TACHOMETER

Ref	Part No.	Description	Qty
1	93-1021	Tachometer Decal	1
2	3250-4	HHMS #8-32UNC x 5/8"	2
3	93-1022	Tachometer	1
4	93-1086	Grommet	1

Ref	Part No.	Description	Qty
5	93-1091	Spade Terminal	1
6	3253-17	Lock washer #8	2
7	3217-25	Hex nut #8-32UNC	2
8	93-0920	RPM to Speed Decal	1

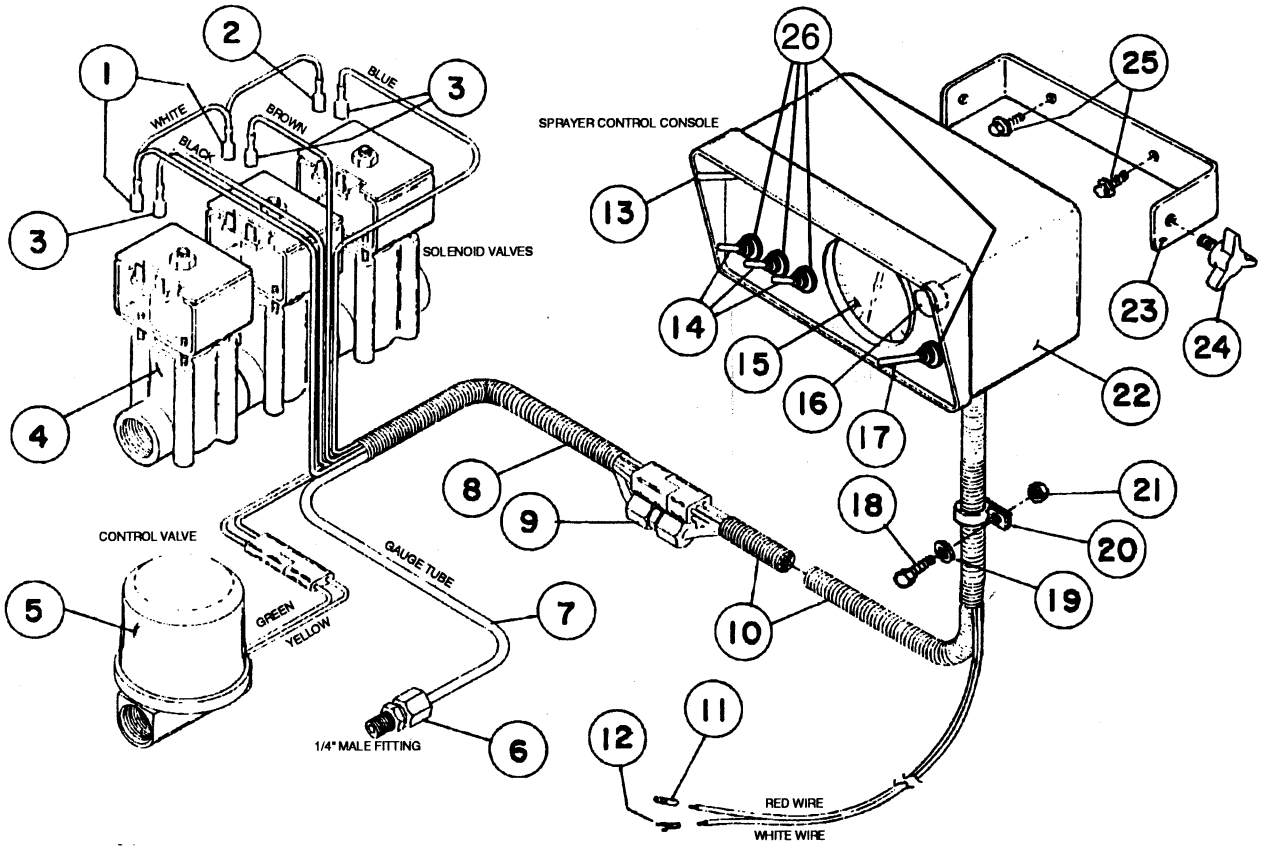

CONTROL CONSOLE

Ref	Part No.	Description	Qty
1	42933	12-10 AWG Female Terminal	2
2	42934	16-14 AWG Female Terminal	1
3	42932	Insulated Female Terminal	3
4	93-1028	Solenoid Valve	1
5	42936	Control Valve	1
6	42931	Male Fitting	1
7	42930	Gauge Tubing	1
8	42935	72" Cable Assembly (Solenoid Hook-Up)	1
9	42929	Union Fitting	1
10	42928	96" Cable Assembly (Enclosure Hook-Up)	1
11	41276	Push-On Terminal	1
12	42875	#10 Spade Terminal	1
13	42923	Master Switch	1

Ref	Part No.	Description	Qty
14	42921	Boom Switch	3
15	42924	Pressure Gauge (P.S.I.)	1
	93-1042	Female Gauge Fitting	1
16	42925	Fuse Holder	1
	42926	15 Amp Fuse	1
17	42927	Pressure Adjust Switch	1
18	20-26-AGD	H.H.C.S., 5/16 NC x 3/4	1
19	24-10-BD	Flat Washer, 5/16	1
20	41230	Hose Clamp	1
21	22-12-AJD	Hex Nut, 5/16 NC	1
22	42937	Console	1
23	42920	Mounting Bracket	1
24	42922	Knob	2
25	34-140-AMVD	Hex Washer Hd. Self-Tap Screw, 1/4 NC x 5/8	2
26	92-8531	Switch Boot	5

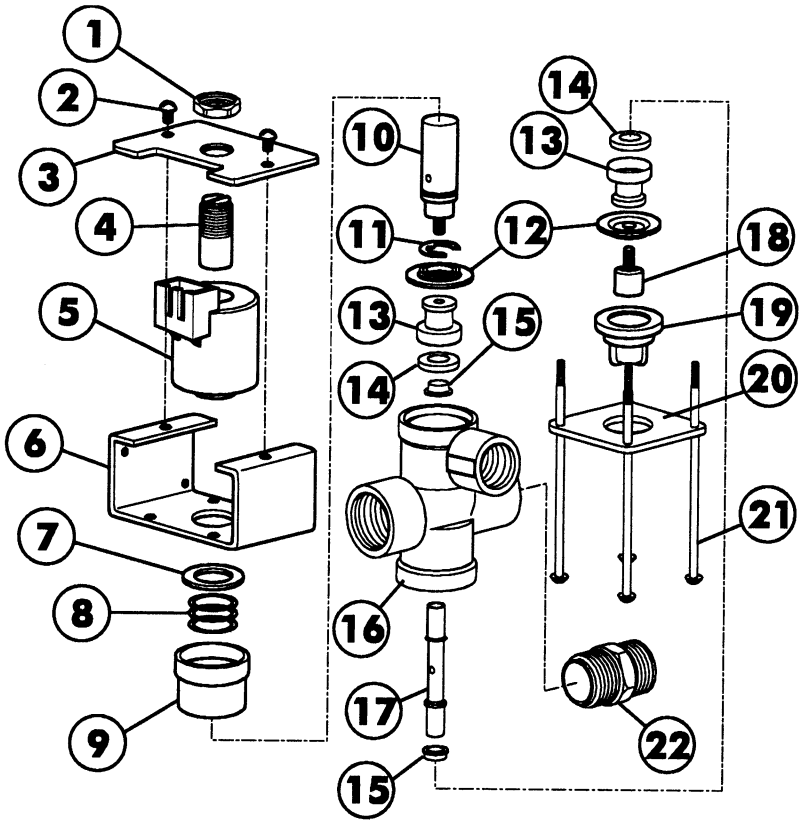

SOLENOID VALVE (93-1027)

Ref	Part No.	Description	Qty
1	92-0358	Jam Nut, Nickel Plated	1
2	42126	Screw - Stainless Steel	2
3	92-0359	Coil Cover, Steel Epoxy Painted	1
4	93-1029	Armature Stop, Nickel Plated	1
5	92-0361	Coil Assembly, Nylon Encapsulated	1
6	92-0362	Strap, Steel Epoxy Painted	1
7	92-0363	Washer, Type 302 Stainless Steel	1
8	*	Spring, Type 302 Stainless Steel	1
9	93-1031	Upper Diaphragm Housing (Black)	1
10	93-1032	Armature, Nickel Plated	1
11	92-0366	Retaining Ring, Nickel Plated	1

Ref	Part No.	Description	Qty
12	*	Diaphragm, Viton	2
13	93-1034	Seat Washer Retainer, S.S.	2
14	*	Seat Washer, Viton	2
15	42136	Spacer, Stainless Steel	2
16	93-1035	Body, Polypropylene (NPT)	1
17	93-1036	Stem, Stainless Steel	1
18	92-0367	Lower Diaphragm Piston, S.S.	1
19	93-1037	Lower Diaphragm Housing, Nylon	1
20	93-1038	Bottom Plate, Steel-Epoxy Painted	1
21	93-1039	Screw - Stainless Steel	4
22	42884	Connecting Nipple, Nylon	AR

* Items are included in Spare Parts Kit 93-1040

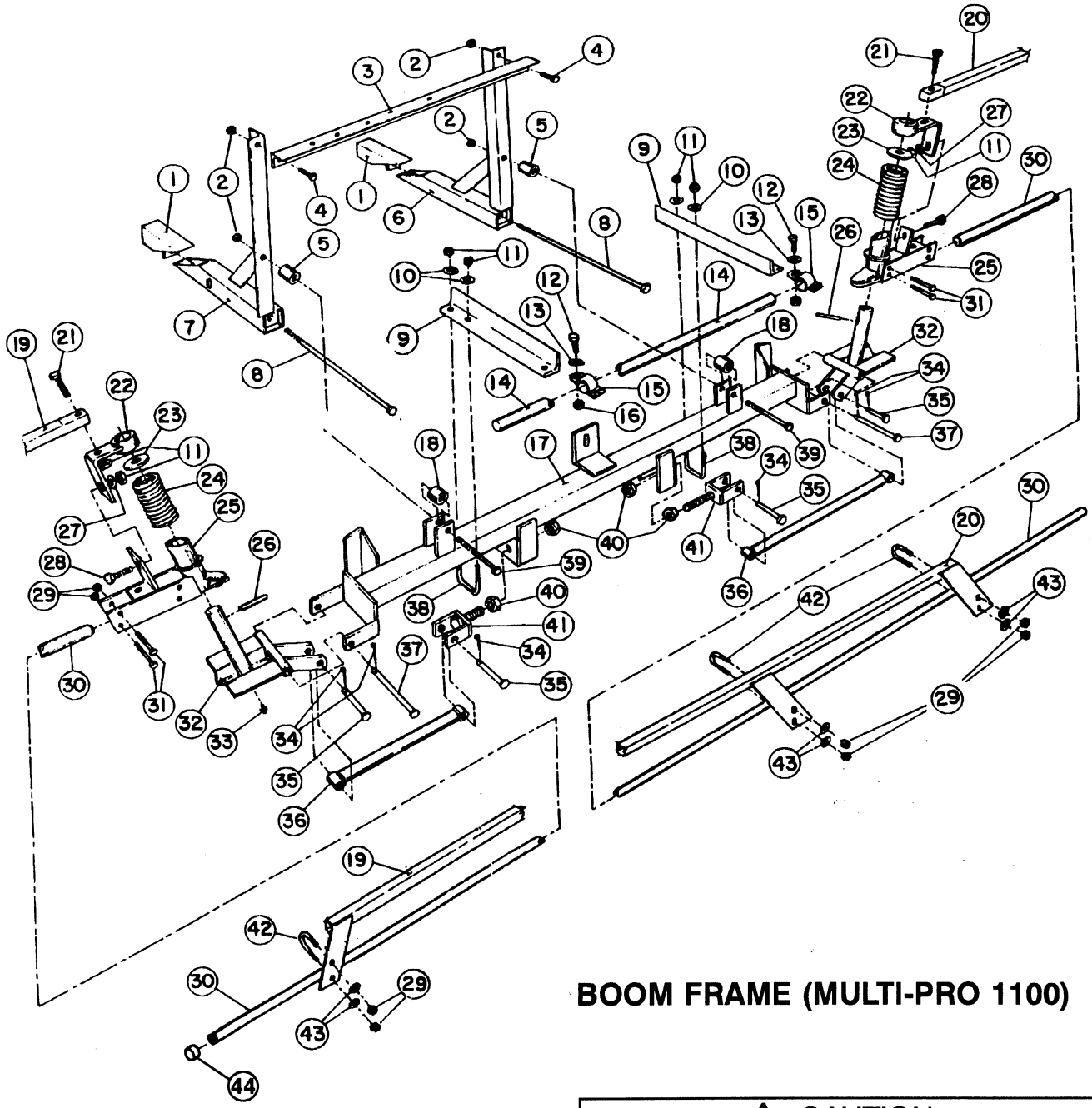

BOOM FRAME (MULTI-PRO 1100)

⚠ CAUTION

THE TWO SPRINGS (REF # 24) ARE UNDER APPROX. 150 LBS. OF PRESSURE. BE VERY CAUTIOUS WHEN REMOVING THE SPRING PINS (REF # 26) FOR REMOVAL OF THE SPRINGS.

IMPORTANT! THE TWO BOLTS (REF # 8) MUST BE TORQUED TO 50 FT. LBS.

BOOM FRAME (MULTI-PRO 1100)

Ref	Part No.	Description	Qty
1	42223	Tube Wedge Assy	2
2	22-15-AJF	Lock Nut, 1/2 NC	4
3	42225	Cross Support Angle	1
4	20-86-AGD	HHCS, 1/2 NC x 1-1/4"	2
5	42258	Spacer Tube, 1-1/4" lg.	2
6	42222	Boom Mount Assy	1
7	42217	Boom Mount Assy	1
8	42199	HHCS, 1/2 NC x 18"	2
9	42234	Center Boom Angle	2
10	24-10-AD	Flat Washer, 5/16	4
11	22-12-AJD	Hex Nut, 5/16 NC	8
12	20-47-AGD	HHCS, 3/8 NC x 1"	2
13	24-11-AD	Flat Washer, 3/8	2
14	40493	Center Boom Pipe	1
15	40494	Clamp Assy	2
16	22-13-AJF	Lock Nut, 3/8 NC	2
17	42227	Main Frame Tube-Welded Assy	1
18	42257	Spacer Tub, 1" Long	2
19	42711	Boom Support Assy - LH	1
20	42710	Boom Support Assy - RH	1
21	20-28-AGD	HHCS, 5/16 NC x 1-1/2"	2
22	42707	Support Bracket Assy	2

Ref	Part No.	Description	Qty
23*	24-18-BD	Flat Washer, 1" S.A.E.	2
24*	42196	Compression Spring	2
25*	42706	Breakaway Pivot Assy	2
26*	29-199-C	Spring Pin, 1/4 x 2"	2
27	24-10-BD	Flat Washer, 5/16 S.A.E.	2
28	25-25-AGD	Carriage Bolt, 5/16 NC x 3/4	2
29	22-11-AJF	Lock Nut, 1/4 NC	16
30	42282	Extension Boom Pipe Assy	2
31	20-8-AGD	HHCS, 1/4 NC x 1-3/4"	8
32*	42243	Hinge Assy	2
33*	361011	Grease Fitting	2
34	28-18-D	Cotter Pin, 1/8 x 1"	6
35	42195	Clevis Pin, 1/2 x 2"	4
36	42240	Strut Assy	2
37	42194	Clevis Pin, 1/2 x 4-1/2"	2
38	301950	U-Bolt, 5/16 NC	2
39	20-97-AGD	HHCS, 1/2 NC x 4"	2
40	22-17-AJD	Hex Nut, 5/8 NC	4
41	42237	Adjustable Clevis Assy	2
42	92-0010	U-Bolt, 1/4 NC	4
43	24-9-AD	Flat Washer, 1/4	8
44	92-8420	Boom Cap	4

* Denotes parts that are available in an assembled unit.
Order #42840 Breakaway Assembly

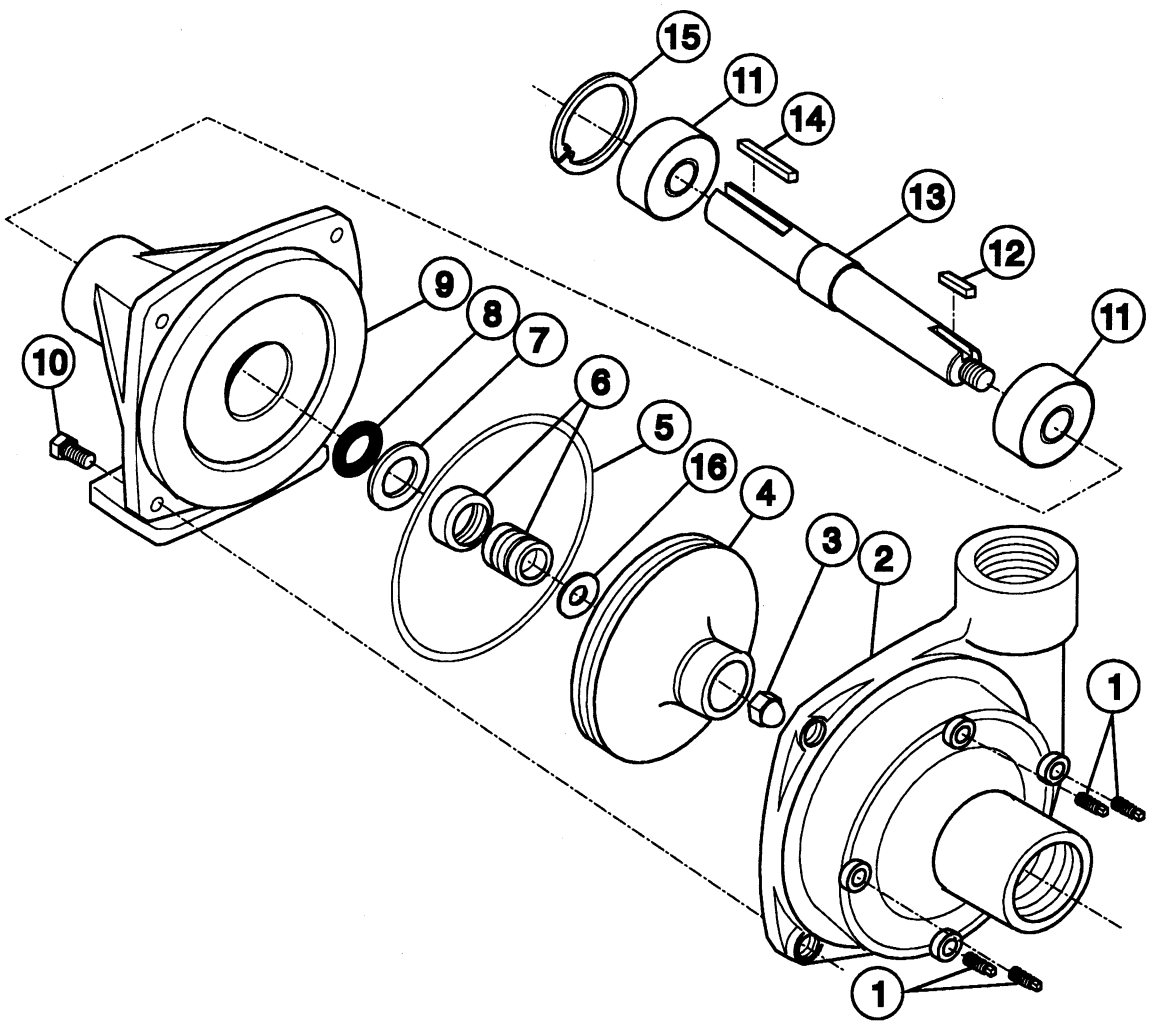

CENTRIFUGAL PUMP (93-0848)

Ref	Part No.	Description	Qty
1	42284	Drain Plug	4
2	93-0922	Pump Casting	1
3	42286	Impeller Nut	1
4	93-0923	Impeller (Polypropylene)	1
5	42289	O-Ring	1
6	42288	Mechanical Seal - Viton	1
7	93-0924	Seal Retainer	1
8	42092	Slinger Ring	1
9	93-0925	Mounting Flange	1

Ref	Part No.	Description	Qty
10	20-47-AGD	Bolt	4
11	93-0927	Ball Bearing	2
12	93-0928	Key	1
13	93-0929	Pump Shaft	1
14	93-0930	Key	1
15	42093	Bearing Retainer	1
16	93-0931	Gasket	1