FORM NO. 93-6185

TORO®

PART NO. 93-6184

SET-UP AND PARTS LIST

# SPLASH GUARD KIT

## FOR THE MULTI PRO™ 1100 & 5200 VEHICLES

Attach Splash Guard to rear fender angles of vehicle using four 5/16" carriage bolts, flat washers, and hex nuts. If the vehicle is a Multi Pro™ 1100, with a serial number lower than 50296, or a Multi Pro™ 5200 with a serial number lower than 50121, holes must be drilled in the the rear fender angles. Center the Splash Guard Assembly over the rear tire and, using it as a template, locate, mark, and drill two 7/16" diameter holes in the rear fender angle on both sides of the vehicle. Attach the Splash Guard Assembly to the Vehicle using 5/16" carriage bolts, flat washers, and hex nuts (right side shown).

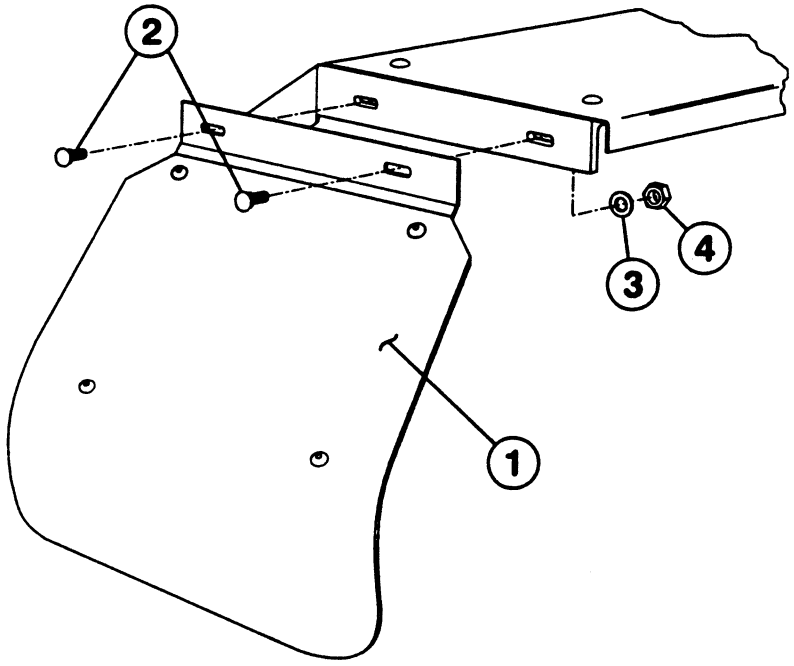


## SPLASH GUARD KIT (93-6184)

| Ref | Part No. | Description | Qty |
|---|---|---|---|
| 1 | 93-6181 | Splash Guard Assembly | 2 |
| 2 | 25 25 AGD | Carriage Bolt, 5/16 x 3/4 | 4 |
| 3 | 24 10 BD | Flat Washer, 5/16 | 4 |
| 4 | 22 12 AJD | Hex Nut, 5/16 NC | 4 |

©The Toro Company - 1995
All Rights Reserved