FORM NO. 93-6268

TORO®

MODEL NO. 41411-50001 & UP
MODEL NO. 41020-50001 & UP
MODEL NO. 41120-50001 & UP
MODEL NO. 41021-50001 & UP

SET-UP AND PARTS LIST

SKID SPRAYER

Refer to the illustrated Parts List for the details of parts used in assembling the SKID SPRAYER.

Note: "Right" and "Left" as used in the following instructions, refer to the operator's right and left when seated in the normal operating position.

Remove the Sprayer Skid from it's shipping skid. For ease of handling, while connecting the Hoses to the Tank, disconnect the 1" x 53" Suction Hose and the 1/2" x 45" Agitator Hose at their respective Quick Couplers. See FIG. 1.

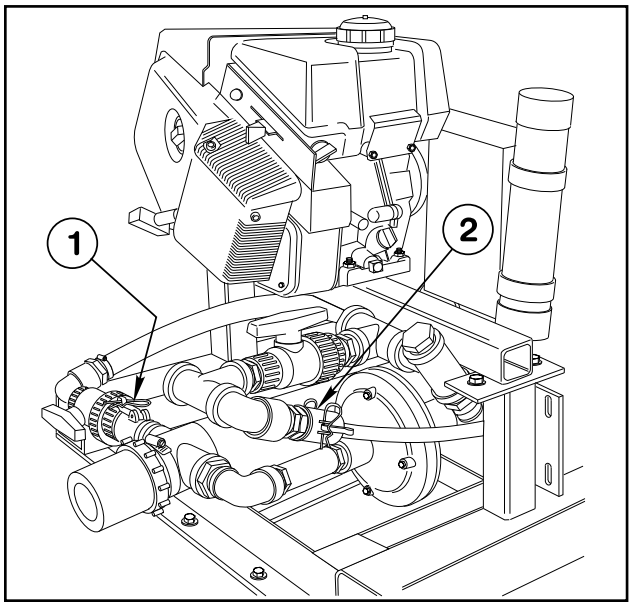

FIG. 1

1. Suction Hose Quick Coupler
2. Agitator Hose Quick Coupler

TANK ASSEMBLY:

1. Cut the shipping straps and remove the Spray Tank and Saddle Assembly from the shipping skid.

2. Remove the two screws holding the Heat Shield to the Tank Saddle and discard the Heat Shield.

NOTE: In the following instructions, "thread sealer" refers to Teflon thread tape.

3. Apply thread sealer and install the 90° barbed elbow into the bottom of the Tank. See FIG. 2.

NOTE: Position the barbed elbow as shown, so that it will angle toward the muffler on the Skid Sprayer engine after the Tank is installed on the Skid Frame.

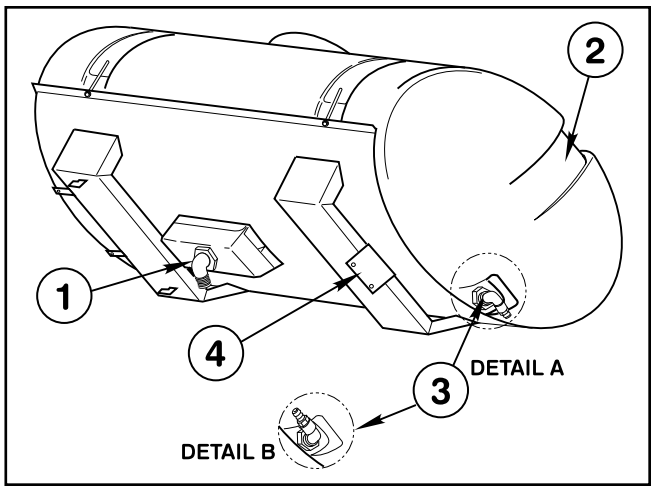

FIG. 2

1. Barbed Elbow (Suction Line)
2. Spill-way
3. Elbow & Quick Coupler (Overflow)
4. Mounting Member

4. Apply thread sealer and assemble the 90° St. elbow to the male Quick Coupler. Install the elbow into the fitting at the spill-way end of the Tank, so that it angles toward the outside of the Tank as shown in FIG. 2.

NOTE: If the Skid Sprayer is to be installed on a Trailer, (as shown in FIG. 3), install the Elbow and Quick Coupler in the Tank as shown in Detail "A" of FIG. 2. If the Skid Sprayer is to be installed on a Transport Vehicle (as shown in FIG. 4), install the Elbow and Quick Coupler as shown in Detail "B" of FIG. 2.

5. Loosen the hose clamp on the Suction Hose and use it to secure the Hose to the barbed elbow in the bottom of the Tank.

©The TORO Company - 1995
All Rights Reserved

6. Loosen the hose clamp on the Agitator Hose and use it to secure the Agitator Hose to the barbed elbow in the end of the Tank. (Opposite the spill-way.)

7. Place the Tank and Saddle Assembly on the Sprayer Skid. Secure it to the Skid frame with two 5/8" x 1-1/2" hex hd cap screws and hex nuts through the mounting member of the Saddle Assembly.

8. Re-connect the Suction and Agitator Hoses at their respective Quick Couplers. See FIG. 1.

BOOM ASSEMBLY (TRAILER PACKAGE):

If the Skid Sprayer is to be equipped with the optional Trailer Package (Model No. 41415), mount the Boom as shown in FIG. 3.

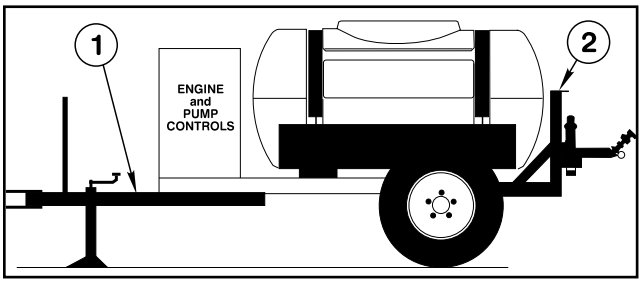

FIG. 3

1. Trailer Package
2. Boom Mount

BOOM ASSEMBLY (TRANSPORT VEHICLE):

The distance between the vehicle bed's mounting surface and the ground level (Nozzle height) will vary with each transport vehicle.

a. If this distance is measured at 24" or less on your vehicle, install the Boom Mounts in the **upright** position. See FIG. 4.

b. If this distance is measured at more than 24" on your vehicle, install the Boom Mounts in the **inverted** position.

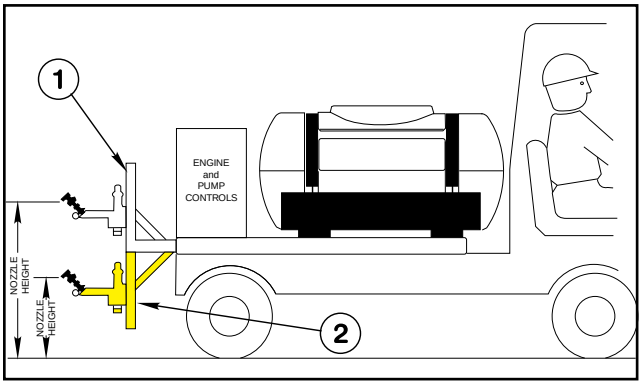

FIG. 4

1. Boom Mount (Upright)
2. Boom Mount (Inverted)

NOTE: Note the position of the angle member of the Boom Mount Assemblies, in relation to the tube member. They must be positioned as shown, for the mounting of the Cross Support Angle. See FIG. 5.

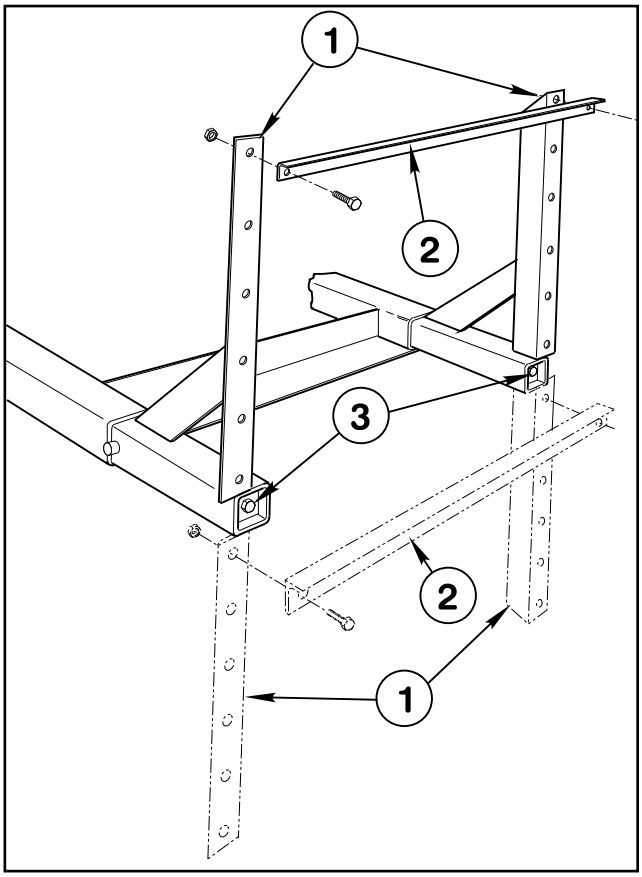

FIG. 5

1. Boom Support Assy.
2. Cross Support Angle
3. Wedge Screw

Install the Main Frame Tube at the height that positions the nozzles 22 to 32 inches above the ground.

1. Apply a heavy coating of grease to the tubes of the two Boom Mount Assemblies and insert them into the Vehicle Frame as shown in FIG. 5.

2. Position the Cross Support Angle and attach it to the Boom Mount Assemblies with two 1/2" x 1-1/4" hex hd cap screws, and lock nuts.

NOTE: Steps 1 and 2 apply to the assembly of the Standard Boom only. If the optional "Boom Pivot Kit" is to be installed, see the instructions furnished with that kit. The Cross Support to be used with that kit is different than the Support used on the Standard Boom.

3. Position the Spacer Tubes between the Boom Mount uprights and the lugs on the Main Frame Tube. Use two 1/2" x 4" hex hd cap screws and lock nuts to secure the Main Frame Tube to the uprights. See FIG. 6.

4. Use a torque wrench to tighten the long (1/2" x 18") wedge screws which join the Wedges to the tubes. Tighten to 50 ft. lbs.

IMPORTANT! FAILURE TO TIGHTEN THE WEDGE SCREWS AT 50 FT. LBS. COULD RESULT IN THE BOOM FRAME FALLING OFF THE SPRAYER!

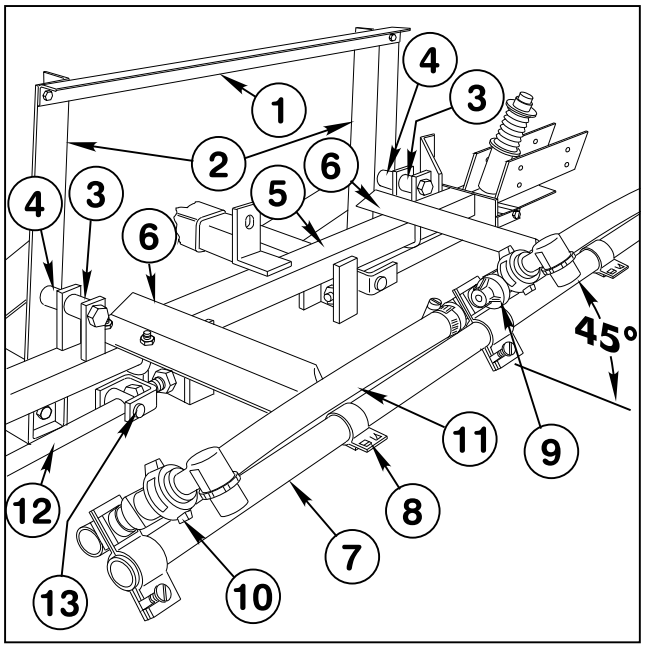

FIG. 6

1. Cross Support Angle
2. Boom Mount Assy.
3. Spacer Tube, 1" lg.
4. Spacer Tube, 1-1/4" lg.
5. Main Frame Tube
6. Center Boom Angle
7. Center Boom Pipe
8. Boom Clamp
9. Triple Barb Nozzle
10. Single Barb Nozzle
11. Jumper Hose
12. Strut Assy.
13. Adjustable Clevis

5. Position the two Center Boom Angles on the Main Frame Tube as shown in FIG. 6 and secure them to the Frame Tube with 2 square “U”-bolts, flat washers, and lock nuts.

6. Center and attach the Center Boom Pipe to the Center Boom Angles with two clamps, 3/8" x 1" hex hd cap screws, flat washers and lock nuts.

7. Loosely attach the Triple Barb Nozzle Assembly in the approximate center of the Center Boom Pipe. For the most uniform spray coverage, position all Nozzle Assemblies at a 45° angle as shown in FIG. 6. Tighten clamp screw to secure the Nozzle to the Boom Pipe.

8. Loosely attach a Single Barb Nozzle Assembly to each end of the Center Boom Pipes. Place two hose clamps on the two 3/4" x 19" Jumper Hoses and connect the Single Barb Nozzles to the Triple Barb Nozzle. Tighten all fasteners securely.

9. Attach the two Strut Assemblies to the two adjustable clevises found on each side of the Main Frame tube with two (2) 1/2" x 2" clevis pins and two (2) 1/8" x 1" cotter pins. See FIG. 6.

10. Insert the plugged end of an Extension Boom Pipe into the Pivot Assembly and secure with four (4) 1/4" x 1-1/4" cap screws and lock nuts. See FIG. 7. Repeat on the opposite side to assemble the other Extension Boom.

IMPORTANT: DO NOT OVER-TIGHTEN THE NUTS IN STEPS 10 & 11. THE CLAMPING ACTION COULD CRUSH THE BOOM PIPE.

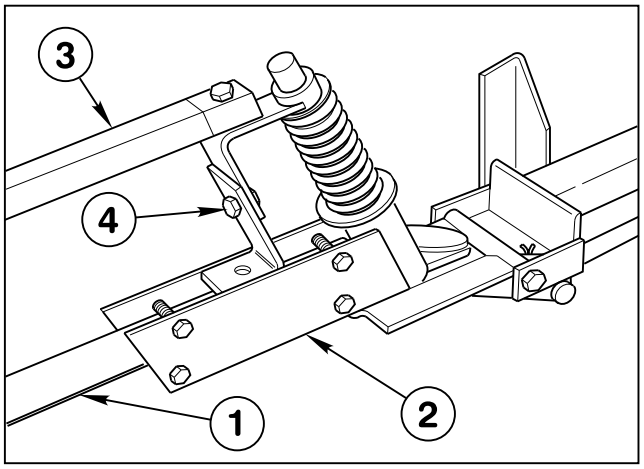

FIG. 7

1. Extension Boom Pipe
2. Pivot Assy.
3. Boom Support Assy.
4. Height Adjustment

11. Attach the Boom Support Assembly to the Pivot Assembly, using a 5/16" x 1-1/2" screw and hex nut. Secure the two plates of the Boom Support Assembly to the Extension Boom Pipe, using two 1/4" U-bolts, four flat washers, and four lock nuts. See FIG. 8.

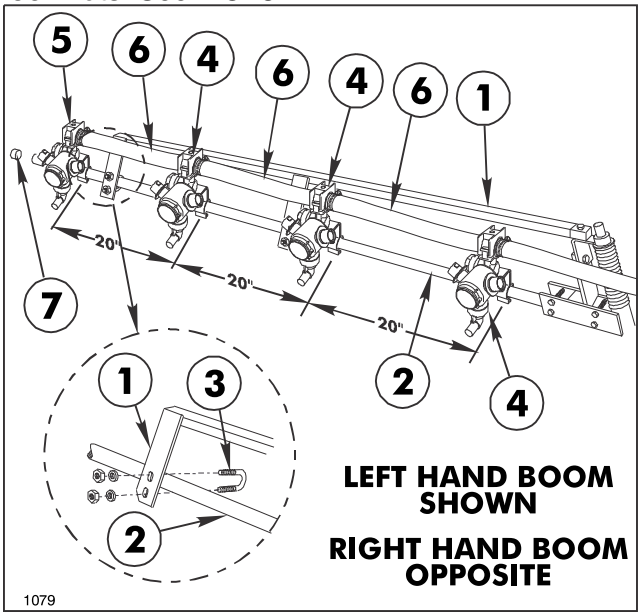

FIG. 8

1. Boom Support Assembly
2. Extension Boom Pipe
3. U-Bolt
4. Double Barb Nozzle
5. Single Barb Nozzle
6. Jumper Hose
7. Boom Cap

12. Repeat steps 10 and 11 on the opposite side to assemble the other Boom Support Assembly.

13. Adjust the Booms to a level position by adjusting the jam nuts on the adjustable clevis assemblies (see FIG. 6) to the desired position, then tighten the jam nuts against the Main Frame plate.

14. Attach three Double Barb and one Single Barb Nozzle Assemblies on each Extension Boom Pipe. Nozzles are to be spaced on 20 inch centers. Connect the Nozzle Assemblies with the 3/4" x 19" Jumper Hoses. Secure with hose clamps(FIG.8).

15. Install the plastic Boom Caps over the ends of the Boom Pipes.

CONTROL VALVE/SOLENOID ASSEMBLY:

1. Apply thread sealer and assemble all components of the Valve and Solenoid Assemblies, including the Supply and Overflow Hoses, as shown on page 14.

2. Loosely attach the Control Valve Bracket to the Cross Support with a 5/16" x 3/4" cap screw, flat washer and nut. See FIG. 9.

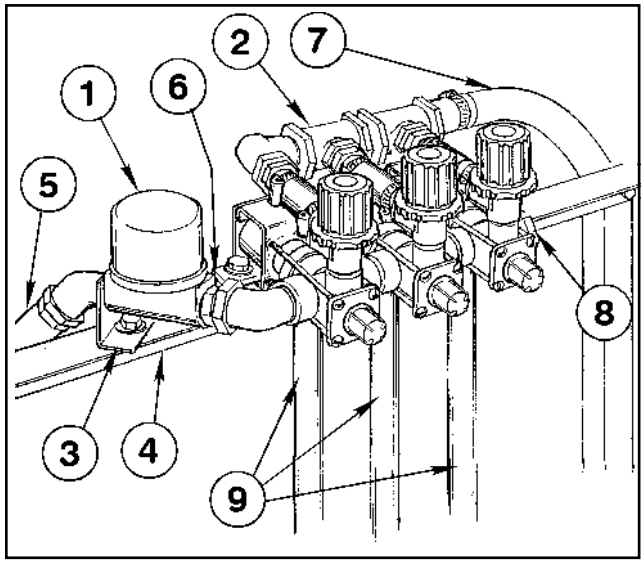

FIG. 9

1. Control Valve
2. Solenoid Assy.
3. Control Valve Brkt.
4. Cross Support Angle
5. Supply Hose
6. Solenoid Mtg. Strap
7. Overflow Hose
8. Gauge Tube Fitting
9. Boom Feeder Hose

3. Slide the Solenoid Mounting Strap into position and mount the complete Control Valve and Solenoid Assembly to the Cross Support as shown in FIG. 9. Use four 5/16" x 1" hex hd cap screws with four washers placed below the screw heads, two between the strap and the Cross Support and four below the Cross Support under the nuts.

4. Connect the Overflow Hose to the Quick Coupler in the spill-way end of the Tank (FIG. 2).

Note: If the Boom Frame is installed at the "Tank" end of the Sprayer Skid, the 100" long Overflow Hose will have to be cut to the length required to connect it to the Quick Coupler in the spill-way end of the Tank. Measure very carefully, being sure to allow plenty of Hose for the Quick Coupler connection.

If the Boom Frame is installed at the "Pump" end of the Sprayer Skid, the Overflow Hose will need to be the full 100" length to reach Quick Coupler in the spill-way end of the Tank.

5. Connect the Supply Hose to the male Quick-Coupler at the Centrifugal Pump.

6. Connect the Boom Feeder Hoses to the barbs in the Solenoid with hose clamps. The two 3/4" x 50" Hoses are to be attached to the left and right Solenoids. The 3/4" x 36" Hose is to be attached to the center Solenoid.

7. Place a hose clamp on the Center Boom Feeder Hose and attach it to the Triple Barb Nozzle on the Center Boom Pipe.

8. Place a hose clamp on the right and left Boom Feeder Hoses and attach them to the Double Barb Nozzles on the right and left Extension Boom Pipes.

FILL THE TANK WITH CLEAN WATER AND CHECK FOR ANY LEAKS.

CONTROLS:

1. Attach the two Magnets to the bottom of the Sprayer Control Box's Mounting Bracket with two 1/4" x 5/8" hex hd. cap screws, lock washers and hex nuts.

The Magnets used to mount the Sprayer and the optional Sprayer Accessory Control Boxes must be attached to a metal surface. If such a surface is not available, a metal mounting bracket will have to be fabricated.

The optionalSprayer Accessory Control Box is used only when the Foam Marker and/or the Electric Boom Lift Kits are added to the Skid Sprayer. Both of these accessories have their own Set-Up Instructions, which are included with the unit.

2. Determine the most convenient location for mounting the Sprayer Control Box, as that will effect the point where the red and black wires of the Wiring Harness will be connected to the power source.

If necessary, the red and black battery wires can be pulled from the split conduit to bring them closer to your Battery. Measure very carefully, being sure to allow plenty of wire for the connections, and cut off any excess wire.

3. Crimp the ring terminals to the stripped ends of the red and black wires. Connect the red wire to the Battery's positive (+) post. Connect the black wire to the negative (-) post.

4. Connect the plugs on the 12 ft. Extension Cable to the cables from the Control Box and the Control Valve. Route the Cables along the Skid Frame and secure with the plastic Sta-Straps provided.

5. Make connections to the electric solenoid valves (black wire on left solenoid, brown on middle solenoid, blue on right solenoid and a white jumper on all three solenoids.

6. Assemble the 1/4" male fitting to the reducer bushing in the end of the Solenoid Valve and connect the Gauge Tube.

PUMP SYSTEM:

⚠ WARNING

- **OPERATING THE SKID SPRAYER WITHOUT SAFETY SHIELDS IN PLACE CAN CAUSE PERSONAL INJURY.**
- **DO NOT OPERATE SKID SPRAYER WITHOUT SAFETY SHIELDS IN PLACE!**

Install the Drive Belt on the Engine and Centrifugal Pump Pulleys as shown in FIG. 10.

NOTE: For the sake of clarity, the safety shields have been removed in this illustration. NEVER operate the Sprayer with the Belt Cover or the Belt Shield removed!

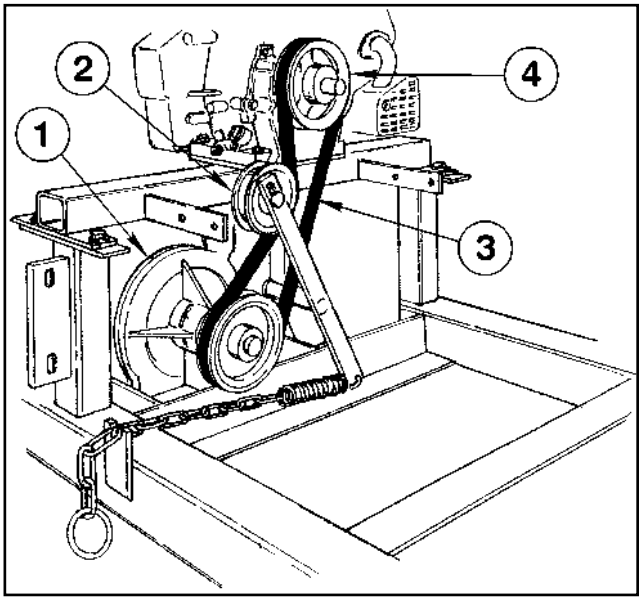

FIG. 10

1. Centrifugal Pump (High Volume)
2. Idler Pulley
3. Drive Belt
4. Engine Pulley

INSTALLING THE SKID SPRAYER ON A TRANSPORT VEHICLE:

Make sure that the weight of the Skid Sprayer and any optional equipment that may be added is within the weight capacity of your transport vehicle. See the chart below for the weights of this unit and it's optional equipment.

Skid Sprayer (Full Tank)	1,973 lbs.
Foam Marker	30 lbs.
Electric Boom	23 lbs.
Manual Hose Reel	150 lbs.
Hi PSI Pump Kit	39 lbs.

1. Position the Skid Sprayer with its Tank as far forward toward the operator's position as possible.

2. Make sure the weight load is centered from side to side within the vehicle bed.

3. Remove one of the bolts which hold the three square tube spacers to the Skid.

4. Using the bolt hole as a template, center punch the vehicle bed and replace the bolt. Repeat the procedure at all six hole locations. See FIG. 11.

5. Drill six over-size holes in the vehicle bed and secure the Skid to the vehicle bed with 3/8" NC bolts of a length determined by the material thickness of the vehicle bed.

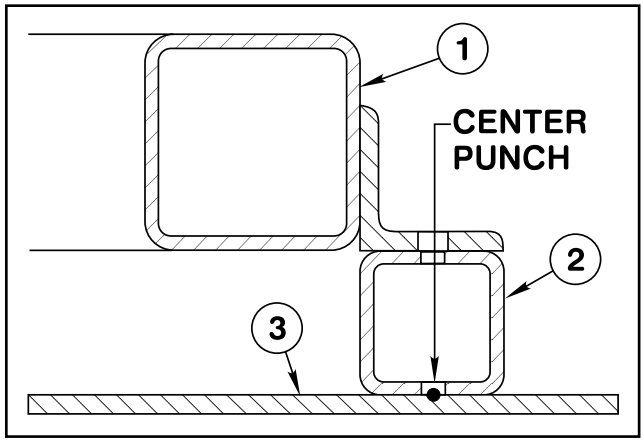

FIG. 11

1. Sprayer Skid
2. Spacer Tube
3. Transport Vehicle Bed

SKID FRAME

Ref	Part No.	Description	Qty
1	92-0213	Belt Guard Assy	1
2	92-0218	Belt Shield	1
3	34-140 AMVD	Hex Washer Hd Self-Tap Screw, 1/4 NC x 5/8"	11
4	42559	Manual Storage Tube	1
5	42560	Storage Tube Bracket	2
6	20-47-AGD	HHCS, 3/8 NC x 1"	10
7	24-11-AD	Flat Washer, 3/8	16
8	20-50-AGD	HHCS, 3/8 NC x 1-3/4"	4
9	92-0049	Square Key, 3/16 x 1-1/4"	1
10	41390	Engine Pulley	1
11	22-13-AJD	Hex Nut, 3/8 NC	9
12	356308	Special Washer	2

Ref	Part No.	Description	Qty
14	41347	Flange Bearing (f/w Engine Frame Assy)	2
15	28-19-D	Cotter Pin, 1/8 x 1-1/4"	1
16	92-0208	Idler Arm Assy	1
17	25-49-AGD	Carriage Bolt, 3/8 NC x 1-3/4"	1
18	41353	Idler Pulley	1
19	41721	Spring	1
20	92-0216	Spacer - Front	1
21	92-0200	Engine Frame Assy	1
22	92-0211	Chain Assy	1
23	92-0217	Spacer - Rear	2
24	65-3090	Decal - Instruction	1
25	92-3518	Decal - Application	1

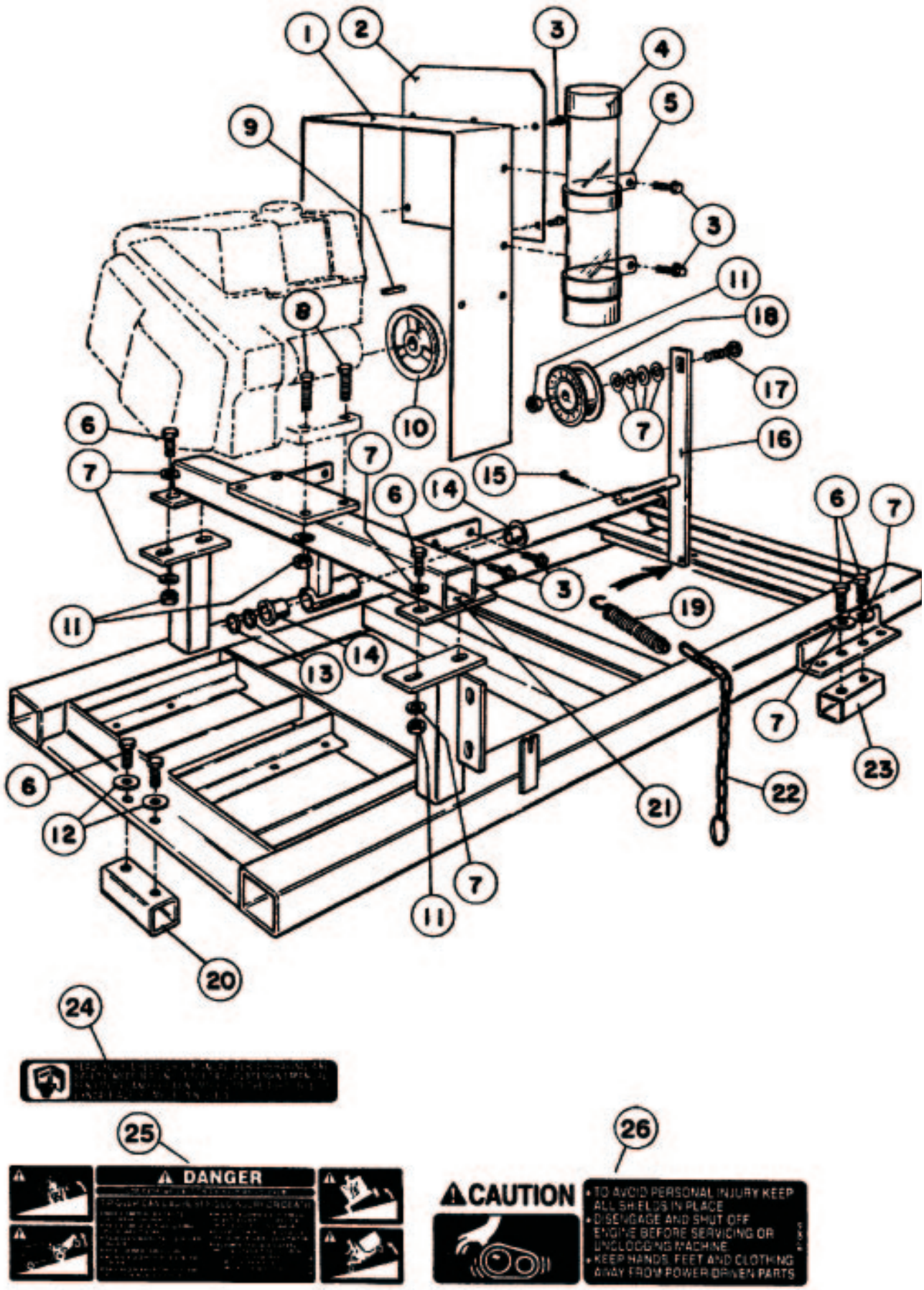
DANGER
CAUTION
• TO AVOID PERSONAL INJURY KEEP ALL SHIELDS IN PLACE
• DISENGAGE AND SHUT OFF ENGINE BEFORE SERVICING OR UNCLOGGING MACHINE
• KEEP HANDS, FEET AND CLOTHING AWAY FROM POWER DRIVEN PARTS

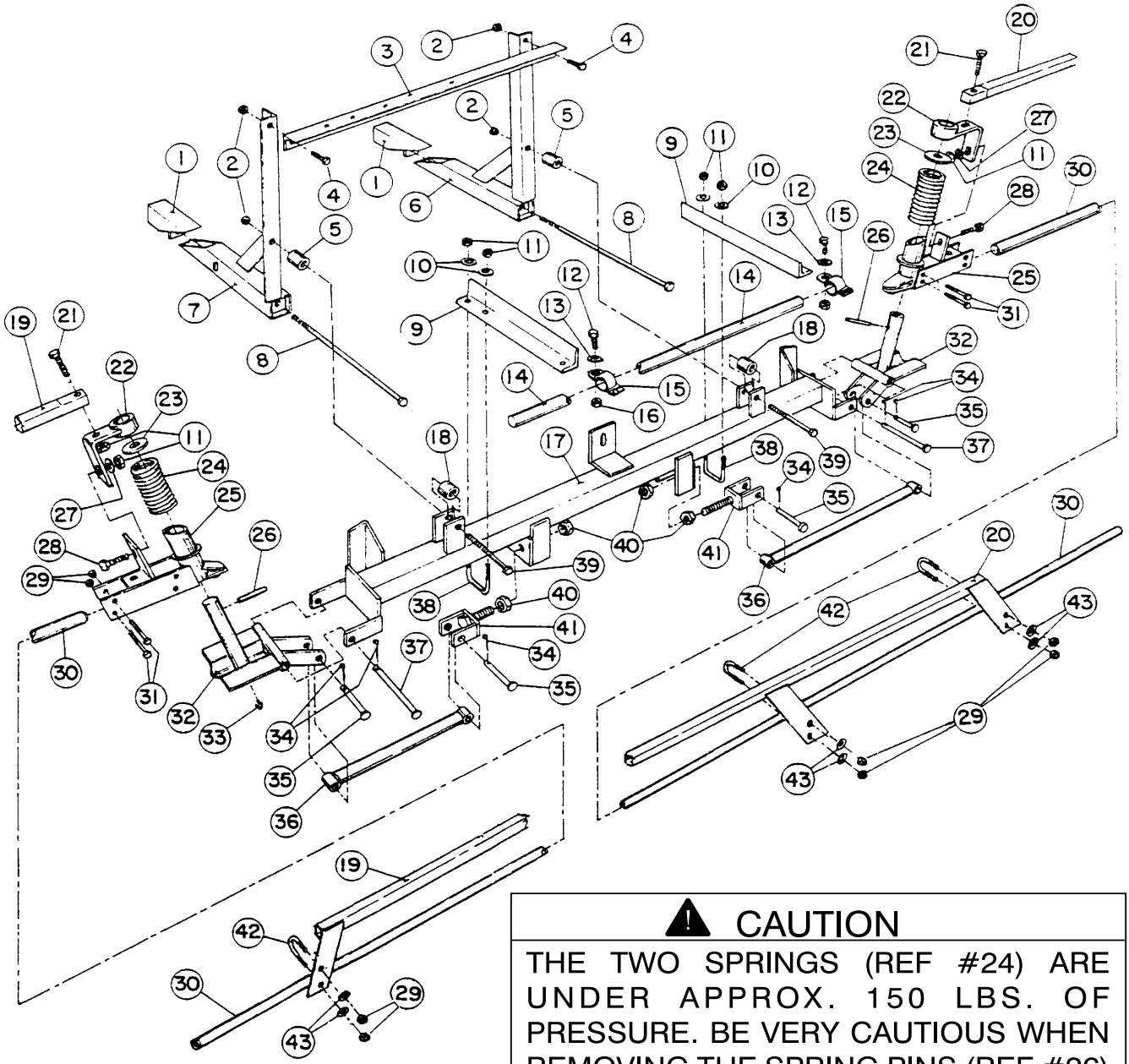

⚠ CAUTION

THE TWO SPRINGS (REF #24) ARE UNDER APPROX. 150 LBS. OF PRESSURE. BE VERY CAUTIOUS WHEN REMOVING THE SPRING PINS (REF #26) FOR REMOVAL OF THE SPRINGS.

IMPORTANT! THE TWO BOLTS (REF #31) MUST BE TORQUED TO 50 FT. LBS.

BOOM FRAME

Ref	Part No.	Description	Qty
1	42223	Tube Wedge Assy	2
2	22-15-AJFD	Lock Nut, 1/2 NC	4
3	42225	Cross Support Angle	1
4	20-86-AGD	HHCS, 1/2 NC x 1-1/4"	2
5	42258	Spacer Tube, 1-1/4" Lg.	2
6	42222	Boom Mount Assy	1
7	42217	Boom Mount Assy	1
8	42199	HHCS, 1/2 NC x 18"	2
9	42234	Center Boom Angle	2
10	24-10-AD	Flat Washer, 5/16	4
11	22-12-AJD	Hex Nut, 5/16 NC	8
12	20-47-AGD	HHCS, 3/8 NC x 1"	2
13	24-11-AD	Flat Washer, 3/8	2
14	40493	Center Boom Pipe	1
15	40494	Clamp Assy	2
16	22-13-AJFD	Lock Nut, 3/8 NC	2
17	42227	Main Frame Tube-Welded Assy	1
18	42257	Spacer Tube, 1" Long	2
19	42711	Boom Support Assy - LH	1
20	42710	Boom Support Assy - RH	1
21	20-28-AGD	HHCS, 5/16 NC x 1-1/2"	2
22	42707	Support Bracket Assy	2

Ref	Part No.	Description	Qty
23*	24-18-BD	Flat Washer, 1" S.A.E.	2
24*	42196	Compression Spring	2
25*	42706	Breakaway Pivot Assy	2
26*	29-199-C	Spring Pin, 1/4 x 2"	2
27	24-10-BD	Flat Washer, 5/16 S.A.E.	2
28	25-25-AGD	Carriage Bolt, 5/16 NC x 3/4	2
29	22-11-AJFD	Lock Nut, 1/4 NC	16
30	42282	Extension Boom Pipe Assy	2
31	20-8-AGD	HHCS, 1/4 NC x 1-3/4"	8
32*	42243	Hinge Assy	2
33*	361011	Grease Fitting	2
34	28-18-D	Cotter Pin, 1/8 x 1"	6
35	42195	Clevis Pin, 1/2 x 2"	4
36	42240	Strut Assy	2
37	42194	Clevis Pin, 1/2 x 4-1/2"	2
38	301950	U-Bolt, 5/16 NC	2
39	20-97-AGD	HHCS, 1/2 NC x 4"	2
40	22-17-AJD	Hex Nut, 5/8 NC	4
41	42237	Adjustable Clevis Assy	2
42	92-0010	U-Bolt, 1/4 NC	4
43	24-9-AD	Flat Washer, 1/4	8

* Denotes parts that are available in an assembled unit.
Order #42840 Breakaway Assembly.

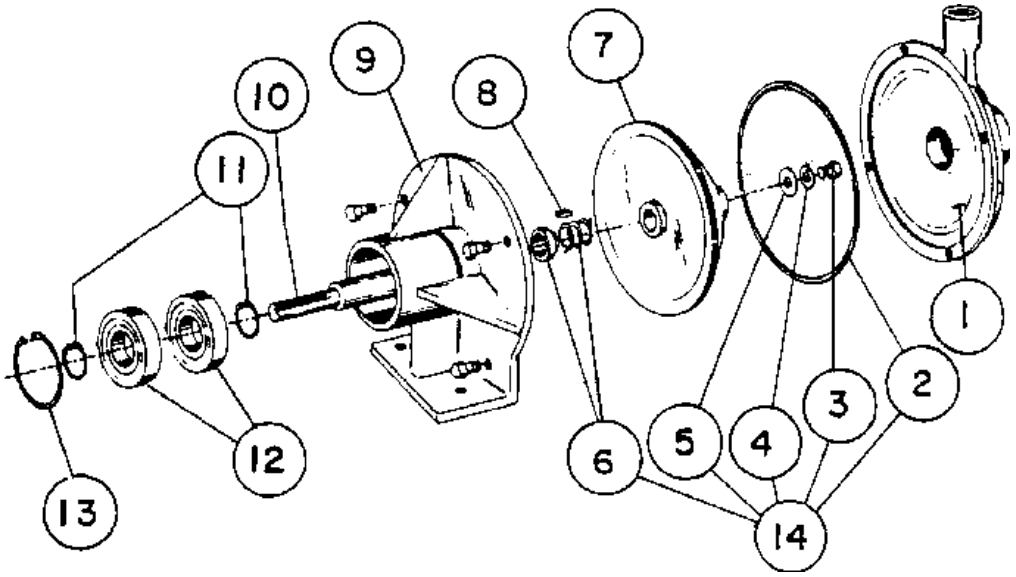

CENTRIFUGAL PUMP (97802)

Ref	Part No.	Description	Qty
1	27474	Volute	1
2	92-0018	O-Ring	1
3	27484	Cap Screw, 5/16 x 1/2 Stnl. Steel	1
4	27485	Lock Washer, 5/16 Stnl. Steel	1
5	27487	Flat Washer, 5/16 Stnl. Steel	1
6	27478	Shaft Seal	1
	41740	Optional Heavy-Duty Seal	1
7	27481	Impeller	1

Ref	Part No.	Description	Qty
8	92-0017	Square Key, 3/16 x 1/2 Stnl. Steel	1
9	27476	Frame	1
10	27477	Shaft, Stainless Steel	1
11	27483	Lock Ring	1
12	27479	Bearing	2
13	27480	Lock Ring	1
14	27490	Repair Kit	AR

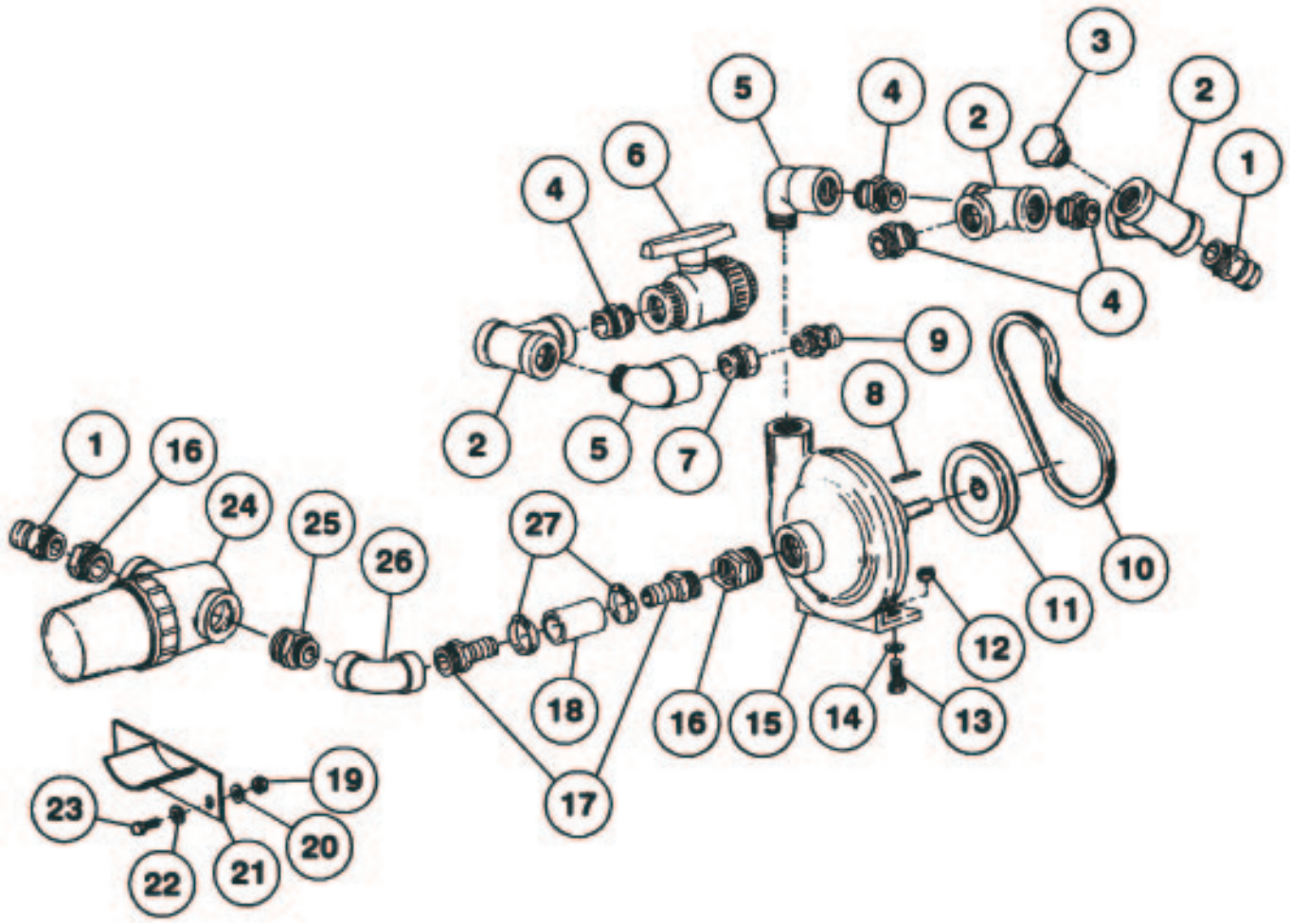

PUMP SYSTEM

Ref	Part No.	Description	Qty
1	40479	Male Quick Barb, 1" MPT	2
	41318	Dust Cap	2
2	41305	Tee, 1" NPT	3
3	41315	Hex Plug, 1" MPT	2
4	41304	Close Nipple, 1" MPT	4
5	41307	90° St. Elbow, 1" NPT	2
6	40020	Ball Valve, 1" NPT	1
7	41306	Red. Bushing, 1" MPT x 1/2" FPT	1
8	92-0049	Square Key, 3/16" x 1-1/4"	1
9	40486	Male Quick Adapter, 1/2" MPT	1
	41317	Dust Cap	1
10	41711	Drive Belt	1
11	40198	Pump Pulley	1
12	22-13-AJD	Hex Nut, 3/8" NC	2
13	20-48-AD	HHCS 3/8" NC x 1-1/4"	2
14	23-11-GD	Lock Washer, 3/8"	2

Ref	Part No.	Description	Qty
15	97802	Centrifugal Pump	1
16	92-0052	Red. Bushing, 1-1/4" MPT x 1" FPT	2
17	92-0012	Hose Barb, 1" MPT x 1" HB	2
18	92-0240	Suction Jumper Hose, 1" I.D. x 3"	1
19	22-12-AJD	Hex Nut, 5/16" NC	2
20	23-10-GD	Lock Washer, 5/16"	2
21	92-0233	Strainer Bracket Assembly	1
22	24-10-BD	Flat Washer, 5/16" SAE	2
23	20-26-AGD	Cap Screw, 5/16" x 1"	2
24	42701	Suction Strainer	1
	93-0687	Strainer Bowl (f/w 42701)	1
	42702	Strainer Screen (f/w 42701)	1
	42703	Strainer Gasket (f/w 42701)	1
25	42992	Red. Nipple, 1-1/4" MPT x 1" MPT	1
26	93-6267	90° Elbow, 1" NPT	1
27	21146	Hose Clamp	2

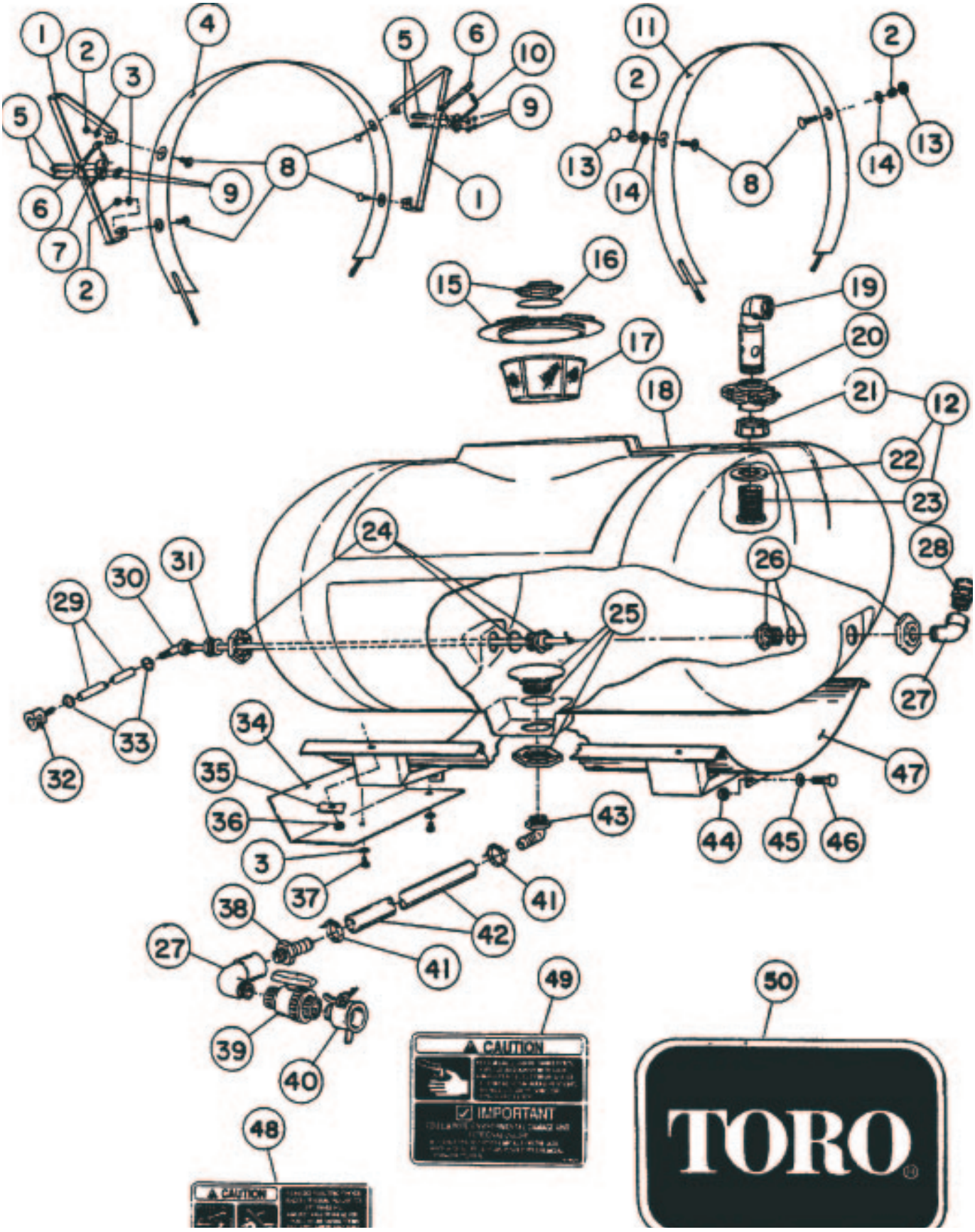
CAUTION
IMPORTANT
CAUTION
TORO

TANK

Ref	Part No.	Description	Qty
1	42983	Hold-In Brace Assy	2
2	22-12-AJD	Hex Nut, 5/16 NC	6
3	24-10-BD	Flat Washer, 5/16	6
4	42880	Mounting Band (Front)	2
5	92-0010	U-Bolt, 1/4 NC	4
6	42198	Rubber Hold Down Strap	2
7	42259	Boom Hold-In Assy - L.H.	1
8	25-25-AGD	Carriage Bolt, 5/16 NC x 3/4	6
9	22-11-AJFD	Lock Nut, 1/4 NC	8
10	42316	Boom Hold-In Assy - R.H.	1
11	43013	Mounting Band (Rear)	2
12	43065	Tank Fitting Ass'y 2"	1
13	42452	Protective Cap	2
14	23-10-GD	Lock Washer, 5/16	2
15	42322	Tank Lid (f/w Tank Assy)	1
	92-3765	Vent Cap	1
16	42859	Breather Gasket (f/w Tank Assy)	1
17	42323	Filler Basket - 16" (f/w Tank Assy)	1
18	42879	Tank Assembly - 160 Gals.	1
19	43069	Stand Up Assy	1
20	43064	Knife Valve	1
21	43068	Fly Nut, 2" NPT	1
22	43067	Sealing Washer	1
23	43066	Bulk Head, 2" NPT	1
24	41801	Tank Fitting, 3/4" NPT (f/w Tank Assy)	1
25	41798	Tank Fitting, 1-1/4" NPT (f/w Tank Assy)	1
26	41800	Tank Fitting, 1" NPT - f/w Tank Assy	1
27	41307	90° St. Elbow, 1" NPT	2
28	40479	Male Quick Adapter, 1" MPT	1
	41318	Dust Cap	1
29	92-0245	Agitator Hose, 1/2 I.D. x 45"	1
30	42981	Agitator Tube Assy	1
	42842	Elbow - Agitator Tube (Barbed)	1
31	41969	Reducer Bushing, 3/4" MPT x 1/2" FPT	1
32	40487	Female Quick Coupler, 1/2" HB	1
33	96609	Hose Clamp	2
34	92-3525*	Heat Shield	1
35	43014	Backing Strap	4
36	22-13-AJD	Hex Nut, 3/8 NC	4
37	20-24-AGD*	HHCS, 5/16 NC x 3/4"	2
38	92-0012	Hose Barb, 1" MPT x 1" HB	1
39	40020	Ball Valve, 1" NPT	1
40	92-0238	Female Quick Coupler, 1" MPT	1
41	21146	Hose Clamp	2
42	92-0241	Suction Hose, 1" I.D. x 53"	1
43	42057	90° Elbow, 1-1/4" MPT x 1" HB	1
44	22-15-AJD	Hex Nut, 1/2 NC	2
45	23-13-GD	Lock Washer, 1/2 Med	2
46	20-86-AGD	HHCS, 1/2 NC x 1-1/4	2
47	42878	Tank Saddle Assy	1
48	87-0570	Decal - "Electric Shock"	2
49	93-0688	Decal - "CAUTION - Chemicals"	1
50	66-1210	Decal - "TORO"	2

* These parts will not be used in Skid Sprayer set-up.

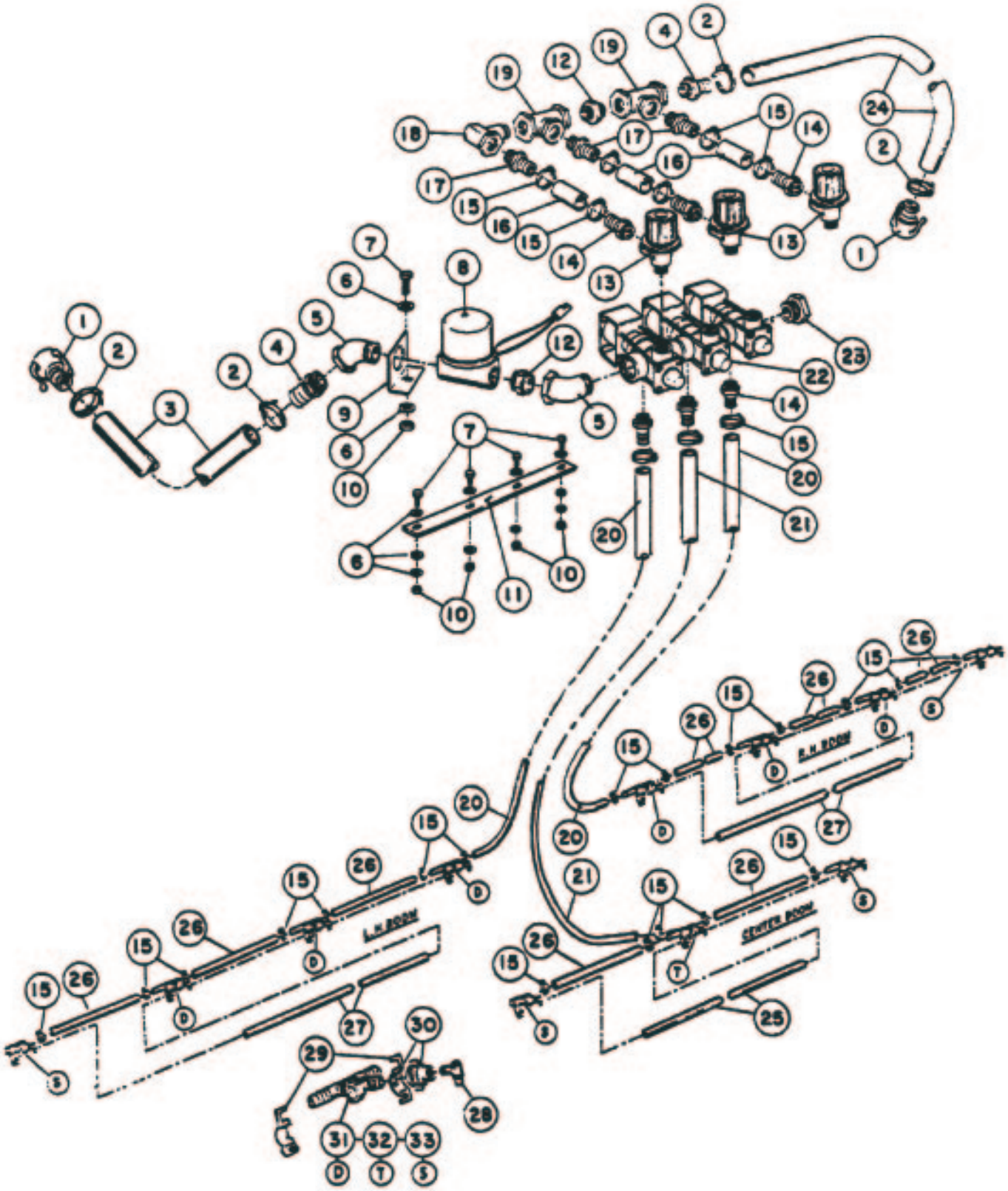
L.H. BOOM
R.H. BOOM
SLEWING BOOM

CONTROL VALVE & BOOMS

Ref	Part No.	Description	Qty
1	40480	Quick Adapter x 1" HB	2
2	21146	Hose Clamp	4
3	92-0244	Supply Hose, 1" I.D. x 80"	1
4	41730	Hose Barb, 3/4" MPT x 1" H.B.	2
5	42939	45° St. Elbow, 3/4" NPT	2
6	24-10-BD	Flat Washer, 5/16 S.A.E.	12
7	20-26-AGD	HHCS 5/16 NC x 3/4	5
8	42936	Control Valve	1
9	42938	Control Valve Mounting Bracket	1
10	22-12-AJD	Hex Nut, 5/16 NC	5
11	41325	Solenoid Valve Mounting Strap	1
12	41294	Close Nipple, 3/4" NPT	2
13	42872	Throttling Valve	3
14	41313	Hose Barb, 1/2" MPT x 3/4" HB	6
15	92-0045	Hose Clamp	9
16	42944	Connector Hose, 3/4" ID x 2-1/2"	3
17	41257	Hose Barb, 3/4" MPT x 3/4" HB	3
18	42940	St. Elbow, 3/4" NPT	1
19	42941	Tee, 3/4 NPT	2
20	41340	Boom Hose, Right & Left	2
21	42274	Boom Hose, Center	1
22	93-1028	Solenoid By-Pass Valve	1

Ref	Part No.	Description	Qty
23	41310	Red. Bushing, 3/4" MPT x 1/4" FPT	1
24	92-3707	Overflow Hose, 1" ID x 100"	1
25	40493	Center Boom Pipe Assy	1
26	40506	Jumper Hose, 3/4 x 19"	8
27	42282	Extension Boom Pipe Assy	2
28	40444	RA-10 Raindrop Nozzle (Optional)	11
	92-0027	RA-15 Raindrop Nozzle (Optional)	11
	41088	RA-6 Raindrop Nozzle (Optional)	11
	42828	RA-8 Raindrop Nozzle (Optional)	11
	92-3977	RA-4 Raindrop Nozzle (Optional)	11
	93-6428	RA-2 Raindrop Nozzle (Optional)	11
29	40999	Clamp Assy	11
30	40997	Adaptor Cap & Seat Gasket Assy	11
	40998	Seat Gasket (f/w 40997)	AR
31	41001	Nozzle Body & Check Valve (Double Barb)	6
32	41002	Nozzle Body & Check Valve (Triple Barb)	1
33	41000	Nozzle Body & Check Valve (Single Barb)	4
	41003	Diaphragm (f/w 41000, 41001, & 41002)	AR

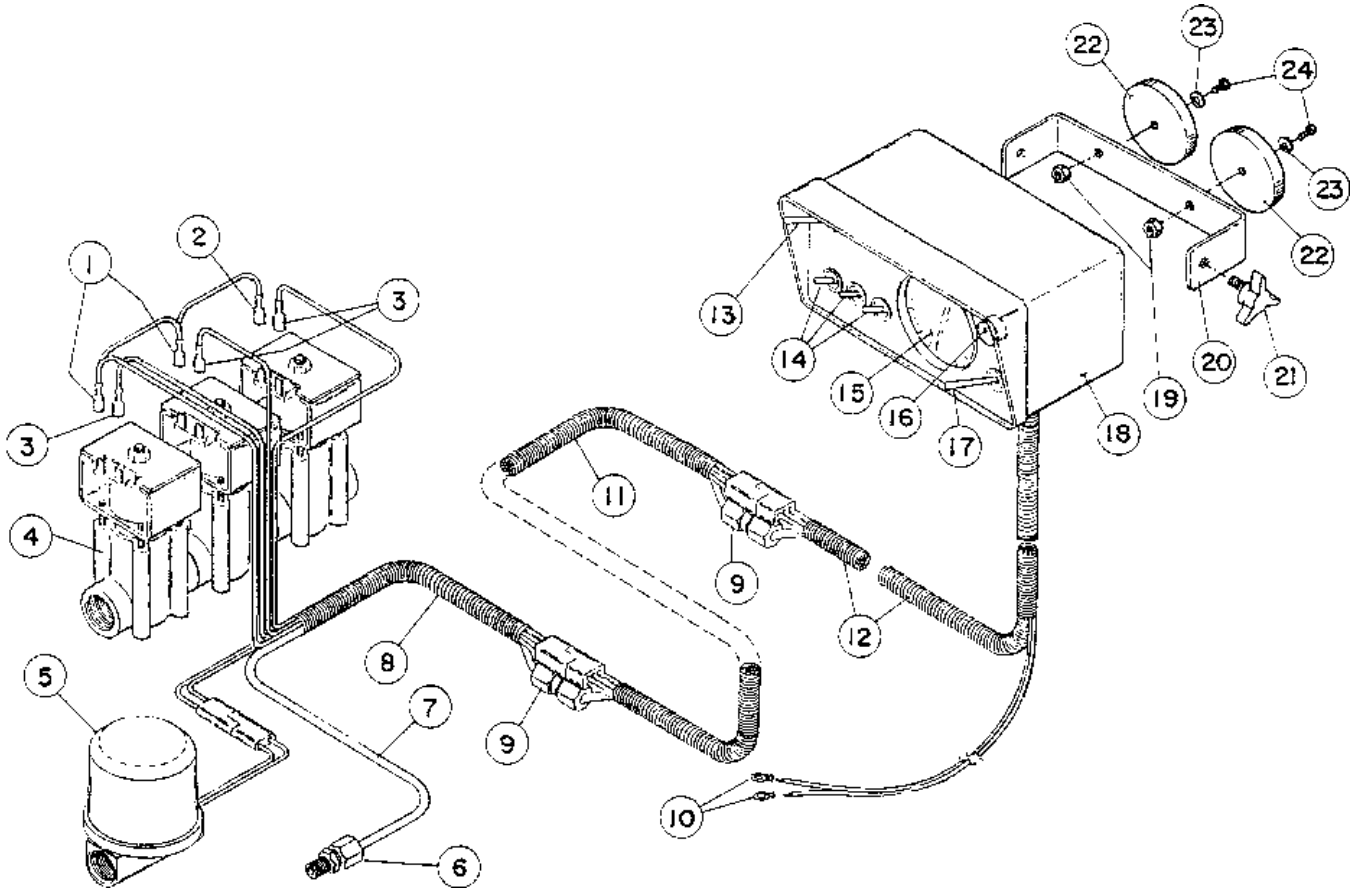

SPRAYER CONTROL

Ref	Part No.	Description	Qty
1	42933	12-10 AWG Female Terminal	2
2	42934	16-14 AWG Female Terminal	1
3	42932	Insulated Female Terminal	3
4	93-1028	Solenoid Valve	1
	93-1027	Single Solenoid	A/R
	93-1040	Seal Kit	A/R
5	42936	Control Valve	1
6	42931	Male Fitting	1
7	42930	Tubing	1
8	42935	72" Cable Assy (Solenoid Hook-Up)	1
9	42929	Union Fitting	2
10	42313	Ring Terminal, 3/8	2
11	92-0257	144" Extension Cable Assy	1

Ref	Part No.	Description	Qty
12	42928	96" Cable Assy (Enclos. Hook-Up)	1
14	42921	Boom Switch	3
15	42924	Pressure Gauge (PSI)	1
16	42925	Fuse Holder	1
	42926	15-AMP Fuse	1
17	42927	Pressure Adjust Switch	1
18	42937	Console	1
19	22-11-AJD	Hex Nut, 1/4 NC	2
20	42920	Mounting Bracket	1
21	42922	Knob	2
22	92-0256	Magnet	2
23	23-9-GD	Lock Washer, 1/4	2
24	20-2-AGD	HHCS, 1/4 NC x 5/8"	2

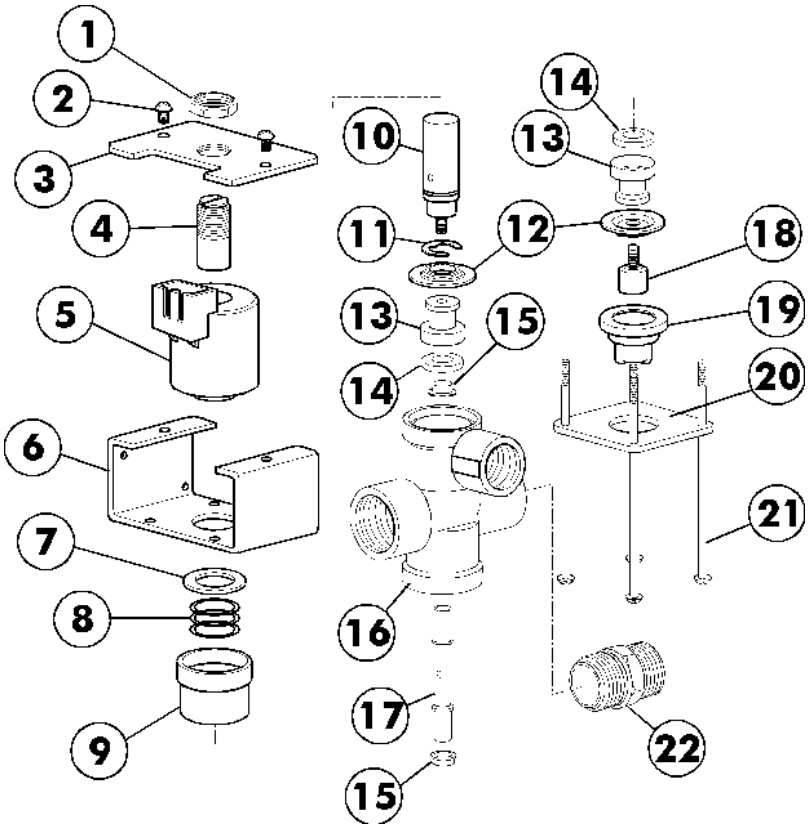

SOLENOID VALVE (93-1027)

Ref	Part No.	Description	Qty
1	92-0358	Jam Nut, Nickel Plated	1
2	42126	Screw - Stainless Steel	2
3	92-0359	Coil Cover, Steel Epoxy Painted	1
4	93-1029	Armature Stop, Nickel Plated	1
5	92-0361	Coil Assembly, Nylon Encapsulated	1
6	92-0362	Strap, Steel Epoxy Painted	1
7	92-0363	Washer, Type 302 Stainless Steel	1
8	*	Spring, Type 302 Stainless Steel	1
9	93-1031	Upper Diaphragm Housing (Black)	1
10	93-1032	Armature, Nickel Plated	1
11	92-0366	Retaining Ring, Nickel Plated	1

Ref	Part No.	Description	Qty
12	*	Diaphragm, Viton	2
13	93-1034	Seat Washer Retainer, S.S.	2
14	*	Seat Washer, Viton	2
15	42136	Spacer, Stainless Steel	2
16	93-1035	Body, Polypropylene (NPT)	1
17	93-1036	Stem, Stainless Steel	1
18	92-0367	Lower Diaphragm Piston, S.S.	1
19	93-1037	Lower Diaphragm Housing, Nylon	1
20	93-1038	Bottom Plate, Steel-Epoxy Painted	1
21	93-1039	Screw - Stainless Steel	4
22	42884	Connecting Nipple, Nylon	AR

* Items are included in Spare Parts Kit 93-1040



Helping you put quality into play.™



Helping you put quality into play.™



Helping you put quality into play.™

WARNING

The engine exhaust from this product contains chemicals known to the State of California to cause cancer, birth defects, or other reproductive harm.