Form No. 3471-392 Rev A

TORO®

Count on it.

Parts Catalog

Greensmaster® Flex™ 1018 Traction Unit

Model No. 04850—Serial No. 417400000 and Up

Register at www.Toro.com.
Original Instructions (EN)

CE

3471-392 A

Ordering Replacement Parts

To order replacement parts, please supply the part number, the quantity, and the description of each part desired.

Understanding Reference Numbers

Each identified part in an illustration has a reference number. The reference number for a part also appears in the parts list, along with other information about the part.

This catalog uses two special reference number formats, one to indicate parts in a service assembly and another to indicate the quantity of a given part in an illustration.

Service Assembly Reference Numbers

Parts in service assemblies have reference numbers in the form a:b. The a represents the reference number of the entire service assembly and the b represents a sequential number unique to each part within the service assembly.

For example, a wheel assembly might be identified by reference number 6, the tire by 6:1, the valve by 6:2, and the wheel by 6:3. When you order the assembly identified by reference number 6, you receive all parts identified by reference numbers 6:1,6:2, and 6:3. However, you may also order any part individually. Reference numbers of this type appear in illustration and in parts lists.

Reference Numbers Indicating Quantity

In an illustration, if a reference number indicates more than one part, the reference number has the form nX y. The n represents the quantity of the part, the X is the multiplication symbol, and the y represents the reference number.

For example, in an illustration, the reference number 2X 37 means that two of the parts identified by reference number 37 are indicated.

Contents

Frame and Handle Mount Assembly 4
Drum Drive Assembly 5
Drum Drive Replacement Kit Assembly No. 147-2345 6
Drum Drive Gear Box Assembly 7
Transmission Assembly 8
Transmission Replacement Kit Assembly No. 140-9324 9
Transmission Gearbox Assembly No. 140-9324 Transmission Case Assembly 10
Transmission Gearbox Assembly No. 140-9324 Reel Drive Assembly 11
Transmission Gearbox Assembly No. 140-9324 Traction Drive Assembly 12
Differential Assembly No. 132-4555 13
Engine Assembly 14
Engine Assembly No. 161-7372 15
Frame Assembly 16
Grass Basket Assembly No. 121-4710 17
Basket Assembly No. 130-6750 18
Reel Controls and Covers Assembly 19
Upper Receiver Assembly No. 147-2288 20
Upper Handle Assembly 21
Traction Bail Assembly 22
Miscellaneous Parts Assembly 23
Attachments and Accessories 24

© 2025—The Toro® Company
8111 Lyndale Avenue South
Bloomington, MN 55420

Contact us at www.Toro.com.
Printed in the USA.
All Rights Reserved

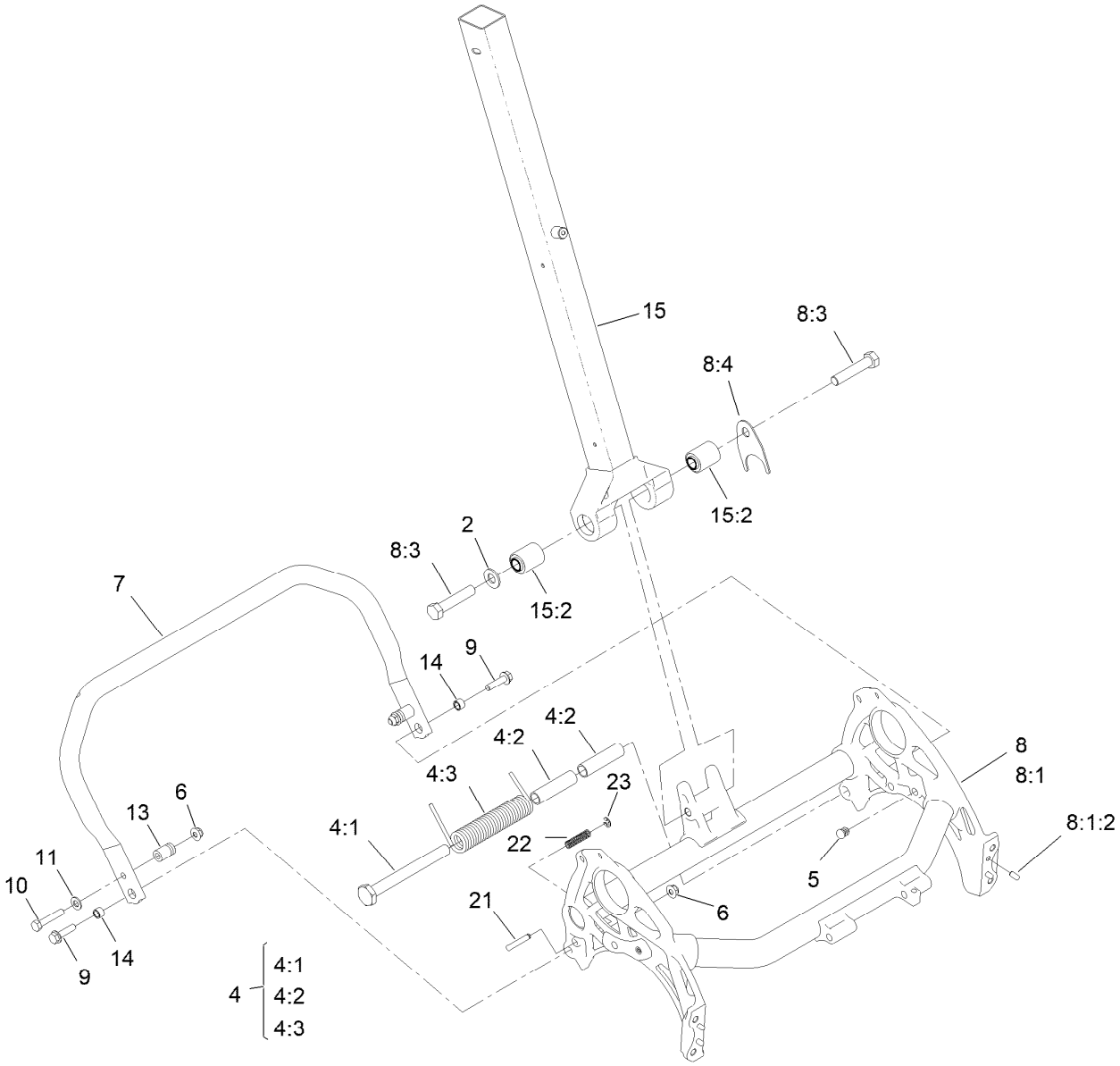

Frame and Handle Mount Assembly

Ref.	Part Number	Qty.	Description
2	3256-26	1	Washer-Flat
4	147-2290	1	Kit-Kickstand Spring Replacement
4:1	147-2285	1	Pin-Mount, Spring
4:2	147-2286	2	Sleeve, Spring-Mount
4:3	147-2268	1	Spring-Torsion, LH
5	139-4326	2	Plug-Plastic
6	119-4041	3	Nut-HF
7	147-2273	1	Kickstand, 18 Inch
8	140-9347	1	Frame ASM, 18"
8:1		1	Frame ASM, 18" ●
8:1:2	95-0715	4	Pin-Dowel

Ref.	Part Number	Qty.	Description
8:3	325-10	2	Screw-HH
8:4	140-9333	1	Washer, Anti-Rotation
9	112-6913	2	Screw-HF
10	322-9	2	Screw-HH
11	3256-23	2	Washer-Plain
13	65-7900	2	Retainer-Spring
14	65-7910	2	Spacer
15	137-0292	1	Lower Handle ASM
15:2	138-1469	2	Bushing-Straight
21	139-7431	1	Pin-Kickstand, Lock
22	73-3450	1	Spring-Compression
23	32151-86	1	E-Ring

● Not serviced separately

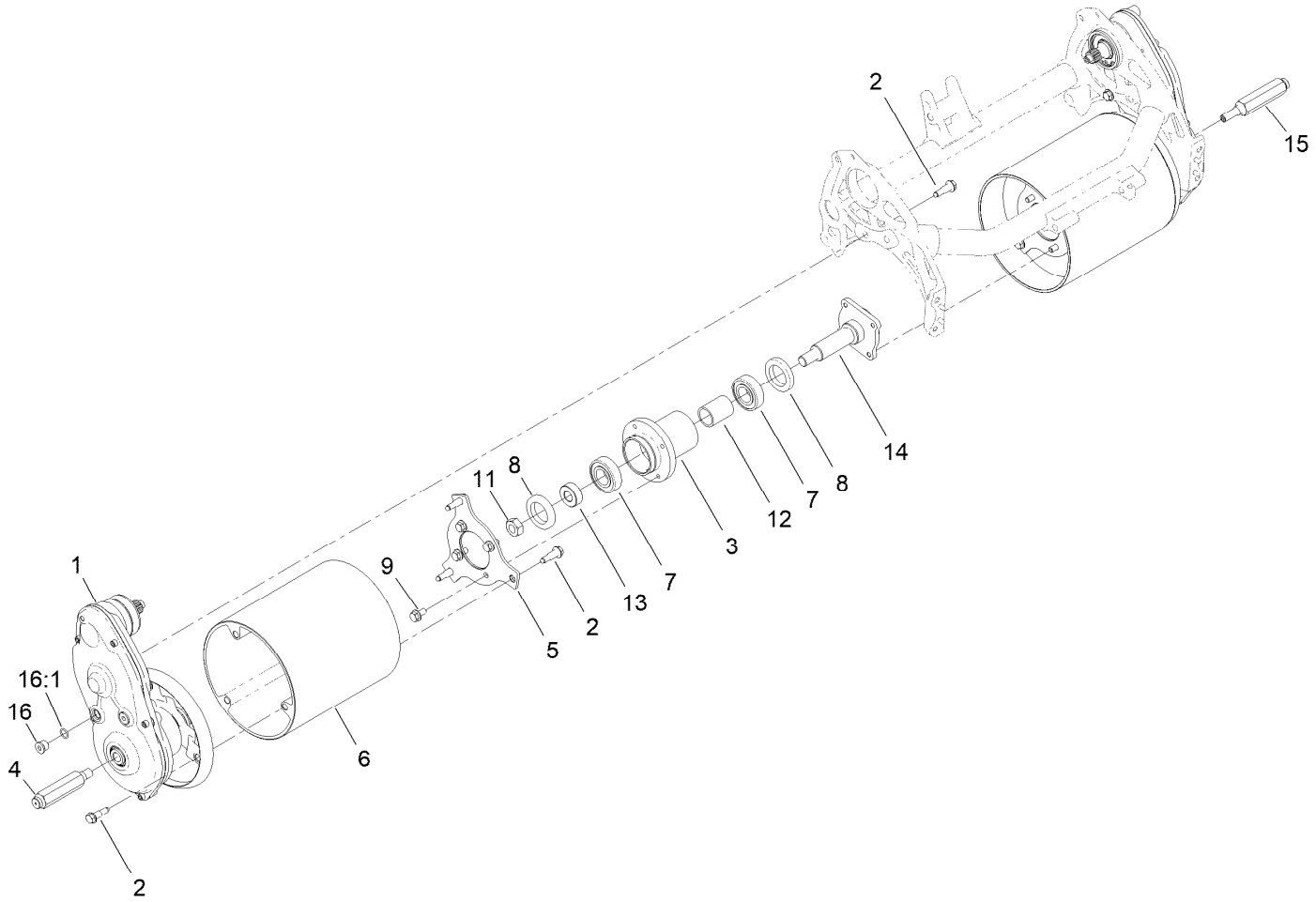

Drum Drive Assembly

Ref.	Part Number	Qty.	Description
1	147-2345	1	Kit-Drum Drive Replacement
2	132-4607	14	Bolt-Shoulder, Flange
3	132-6971	1	Hub-Drum
4	132-4605	1	Shaft-Hex, RH
5	147-2257	2	Plate-Drum, Hub
6	139-4364	2	Drum-Traction, Flex
7	251-82	2	Bearing-Ball
8	253-159	2	Seal
9	114-7728	8	Screw-HHF, Patch
11	3296-33	1	Nut-Lock, NI
12	65-6520	1	Spacer
13	65-6530	1	Spacer
14	94-5850	1	Spindle-Drum
15	132-4606	1	Shaft-Hex, LH
16	353-989	4	Plug-Hex, Hollow
16:1	237-42	1	O-Ring

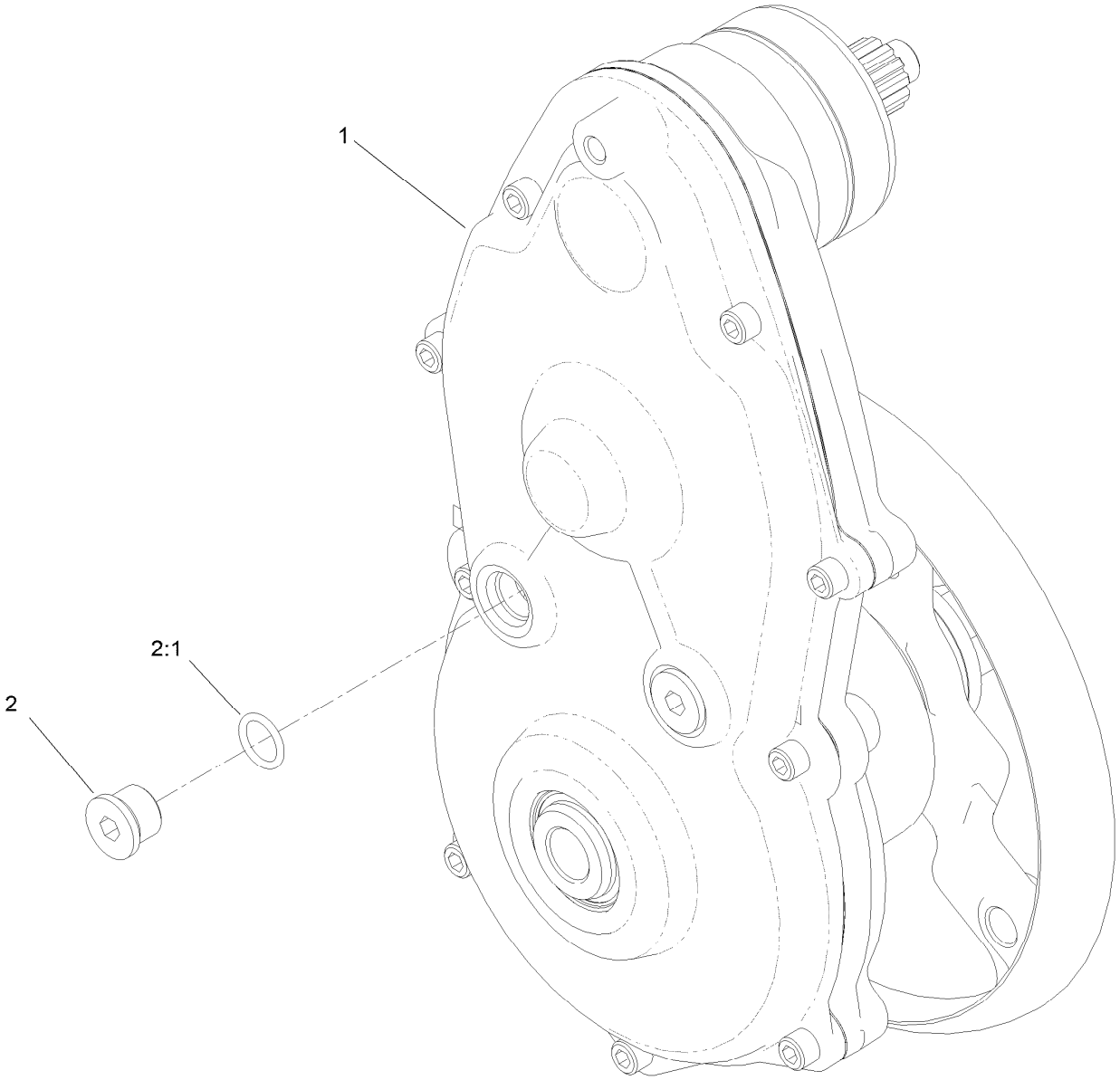

Drum Drive Replacement Kit Assembly No. 147-2345

Ref.	*Part Number*	*Qty.*	*Description*
1		1	Drum Drive Gear Box ASM ●
2	353-989	2	Plug-Hex, Hollow
2:1	237-42	1	O-Ring

● Not serviced separately

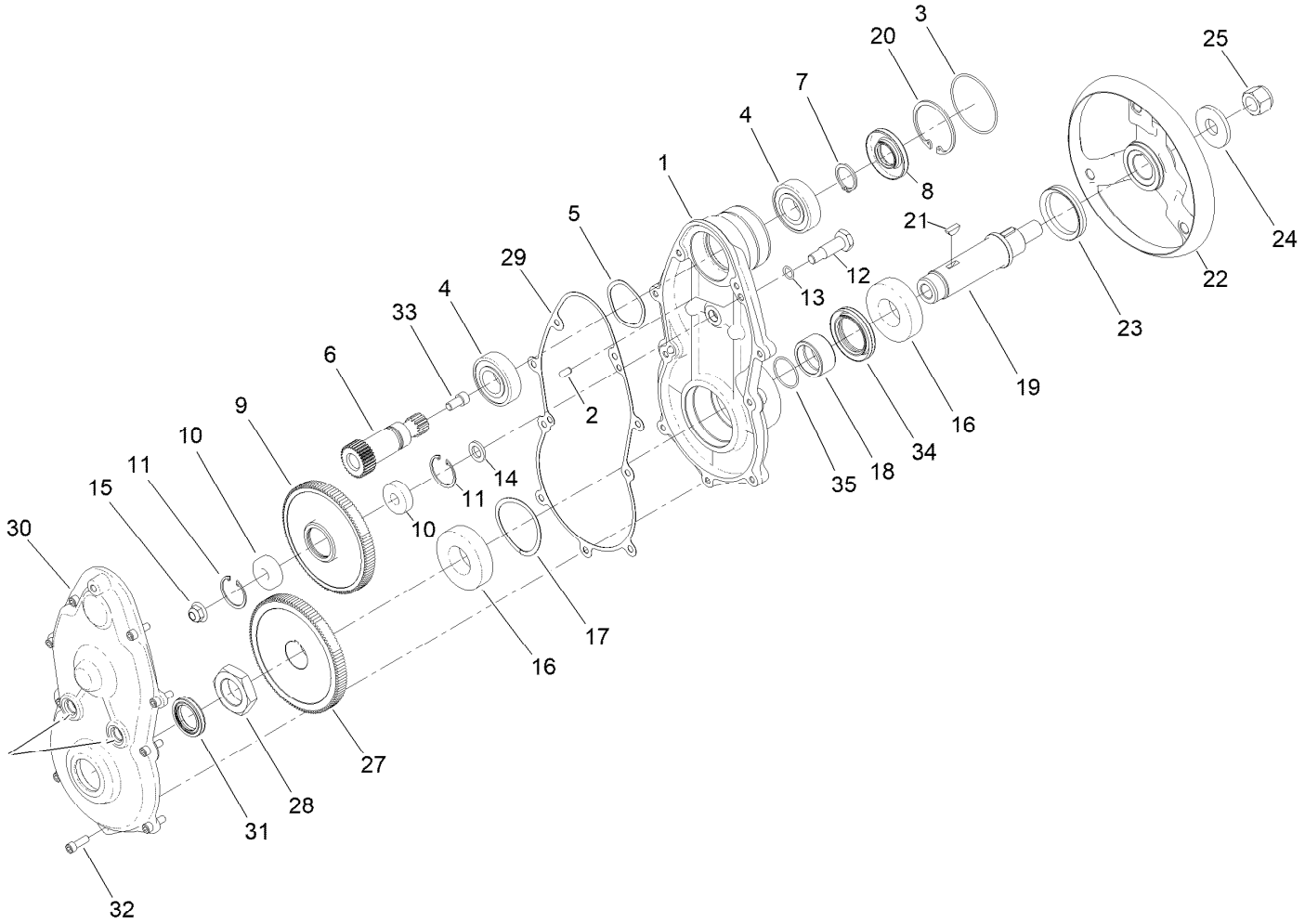

Drum Drive Gear Box Assembly

Ref.	Part Number	Qty.	Description
1	147-2321	1	Housing-Drive, Drum
2	133-4591	2	Pin-Dowel
3	133-9082	1	O-Ring
4	251-82	2	Bearing-Ball
5	3290-485	1	Washer-Wave
6	132-4565	1	Gear-Spur, 30T
7	138-1507	1	Ring-Retaining, EXT (25MM)
8	138-1491	1	Seal-Oil
9	137-0274	1	Gear-Spur, 108T
10	49-2410	2	Bearing-Ball
11	138-1506	2	Ring-Retaining, Int (32MM)
12	133-4558	1	Pin-Bearing, Short
13	80-8460	1	O-Ring
14	133-4553	1	Spacer-Bearing
15	119-4042	1	Nut-HF, NI
16	251-312	2	Bearing-Ball
17	115-5258	1	Spring-Wire, Flat

Ref.	Part Number	Qty.	Description
18	147-2348	1	Spacer
19	133-4562	1	Shaft-Drum, Drive
20	138-1480	1	Ring-Retaining, Int (52MM)
21	138-1504	2	Key-Woodruff, 5MM
22	133-9244	1	Hub-Drum, Outer
23	253-161	1	Seal-V-Ring
24	104-9216	1	Washer-Hardened
25	126-3841	1	Nut-Hex, NI
27	147-2349	1	Gear-Spur, 114T
28	133-9078	1	Nut-Hex
29	147-2324	1	Gasket-Drum Drive
30	147-2323	1	Cover-Drive, Drum
31	133-4559	1	Seal-Oil
32	140-9233	9	Screw-HSH
33	3274-12	1	Screw-HSH
34	147-2346	1	Seal-Oil
35	147-2347	1	O-Ring

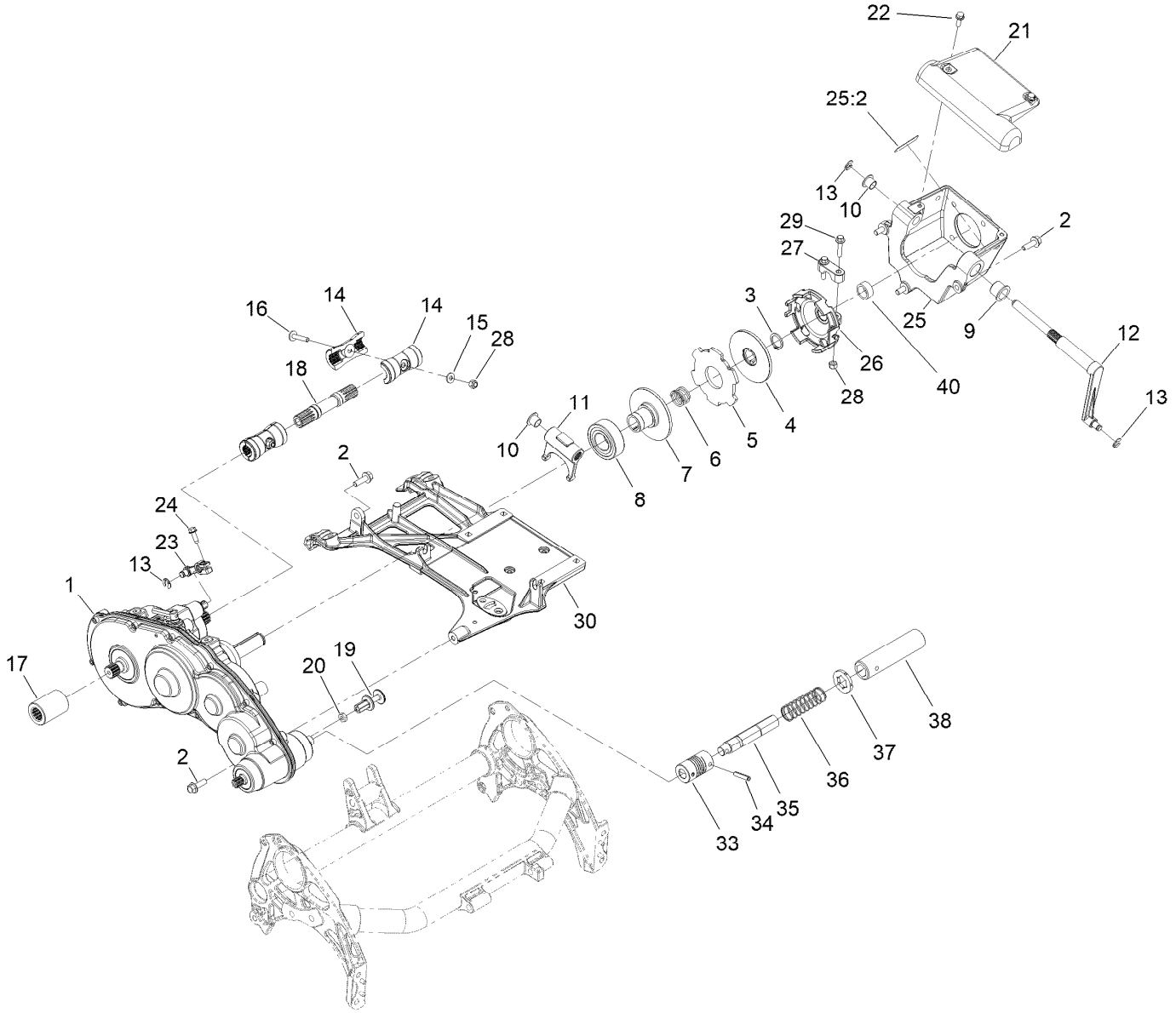

Transmission Assembly

Ref.	Part Number	Qty.	Description
1	140-9324	1	Kit-Transmission Replacement
2	115-5142	5	Screw-HHF, Patch
3	32151-33	1	Ring-Retaining, EXT
4	133-9095	1	Disc-Clutch
5	133-9094	1	Plate-Friction
6	133-9123	1	Spring-Compression, Clutch
7	138-1508	1	Disc-Clutch, Slider
8	138-1505	1	Bearing-Sealed, Self Aligning
9	132-4089	1	Bushing
10	125-5239	2	Bushing-Flange
11	138-3548	1	Fork-Clutch
12	138-3549	1	Shaft-Fork
13	32151-47	3	Ring-Retaining
14	133-9100	4	Coupler-Splined, 4 Tooth
15	119-8952	2	Washer-Spcl
16	126-8232	2	Screw-Truss Hex Skt
17	138-1615	1	Tube-Drive
18	139-4327	1	Shaft-Drive, 18 Inch
19	133-9207	1	Adapter-Slider
20	120-9638	1	Nut-Jam
21	138-5545	1	Cover-Clutch
22	119-1138	2	Screw-HHF,Patch
23	133-9117	1	Lever-Brake, Cable
24	131-6150	1	Screw-HWHTF
25	139-4301	1	Bell Housing ASM
25:2	120-9570	1	Decal-Warning
26	138-3542	1	Hub-Clutch, External
27	138-5522	1	Clamp-Hub, Clutch
28	3296-42	4	Nut-Lock, NI
29	127-8639	2	Screw-HHF
30	138-5517	1	Base-Engine
33	133-2341	1	Coupling-Helical
34	125-3542	2	Pin-Roll
35	139-7399	1	Shaft-Coupler
36	140-3407	1	Spring-Compression, Coupler
37	139-7391	1	Collar-Lock
38	110-2390	1	Tube-Hex
40	147-2265	1	Spacer-Clutch

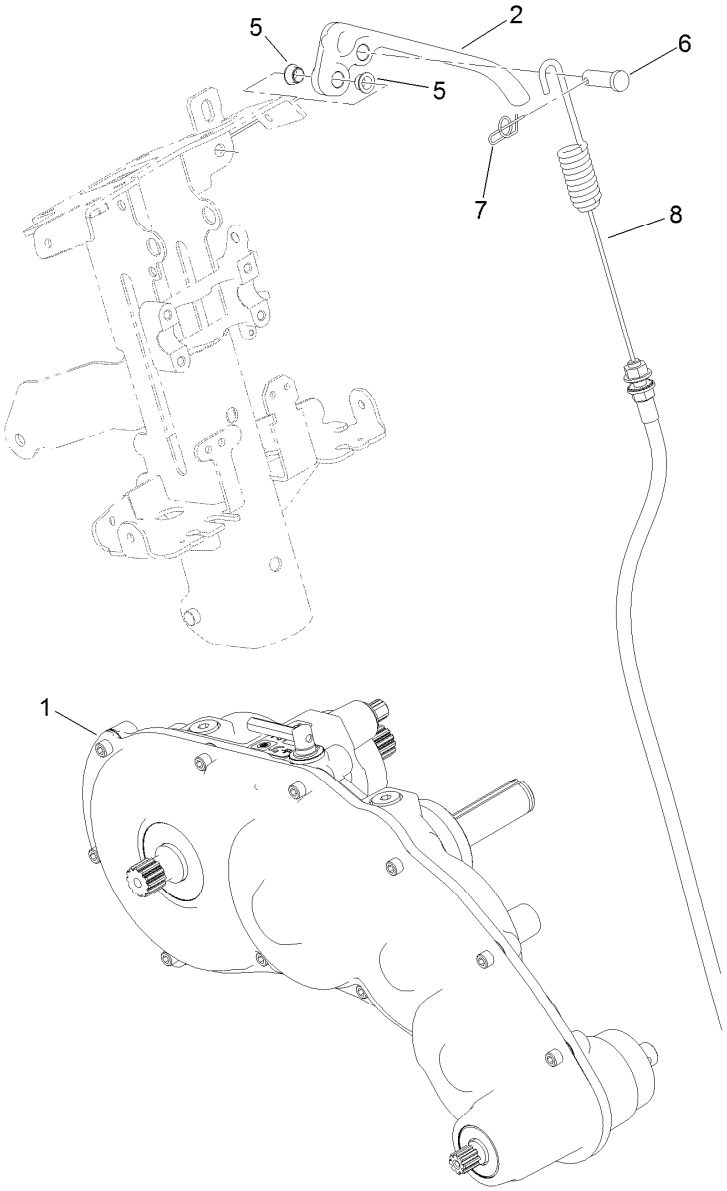

Transmission Replacement Kit Assembly No. 140-9324

Ref.	*Part Number*	*Qty.*	*Description*
1	130-6820	1	Transmission Gear Box ASM
2	140-9298	1	Lever-Brake
5	138-5538	2	Bushing-Flange
6	1-808285	1	Pin-Clevis
7	140-9312	1	Pin-Cotter, Locking
8	140-9318	1	Cable ASM, Brake

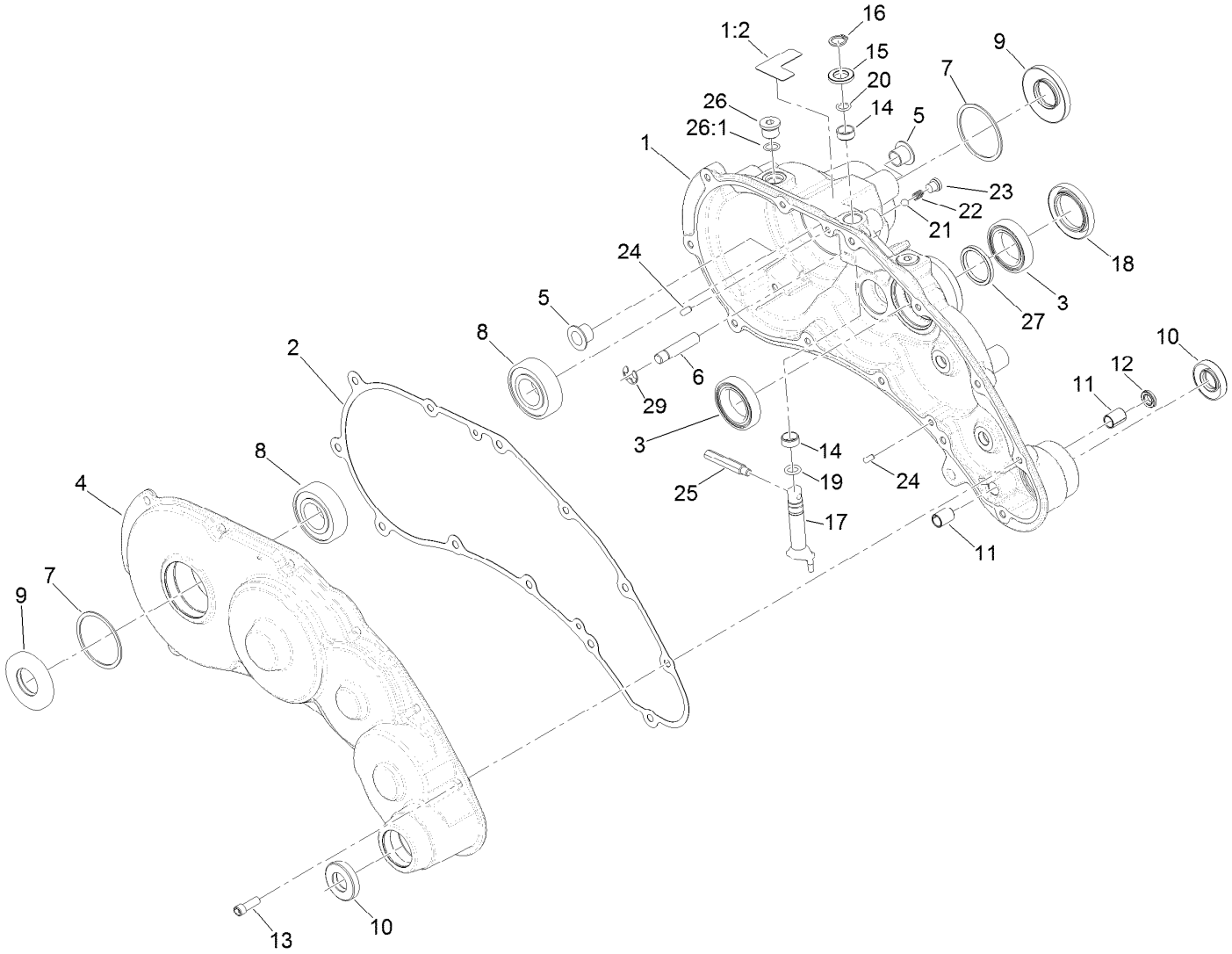

Transmission Gearbox Assembly No. 140-9324
Transmission Case Assembly

Ref.	Part Number	Qty.	Description
1	139-4306	1	Transmission Housing ASM
1:2	138-1644	1	Decal-Release, Traction
2	132-4551	1	Gasket-Transmission
3	121-9281	2	Bearing-Ball
4	138-1603	1	Transmission Cover ASM
5	125-5239	2	Bushing-Flange
6	133-9122	1	Pin-Mount, Brake
7	32151-92	2	Ring-Retaining
8	251-82	2	Bearing-Ball
9	133-9075	2	Seal-Oil
10	130-9463	2	Seal-Oil
11	131-3038	2	Bushing-Sleeve
12	131-3126	1	Seal-Oil
13	140-9233	12	Screw-HSH
14	121-4738	2	Bushing-Straight

Ref.	Part Number	Qty.	Description
15	108-5059	1	Spacer-Bushing
16	32151-61	1	Ring-Retaining
17	130-6816	1	Shaft-Selector, Traction
18	140-9325	1	Seal-Grease, High Temp
19	131-1879	1	O-Ring Seal
20	237-22	1	O-Ring
21	105-2442	1	Ball-Detent
22	105-2443	1	Spring-Detent
23	131-1825	2	Plug-ORB
24	121-9249	2	Pin-Dowel
25	133-9149	1	Pin-Groomer
26	353-989	2	Plug-Hex, Hollow
26:1	237-42	1	O-Ring
27	138-1496	1	Spacer
29	105-7004	1	E-Ring

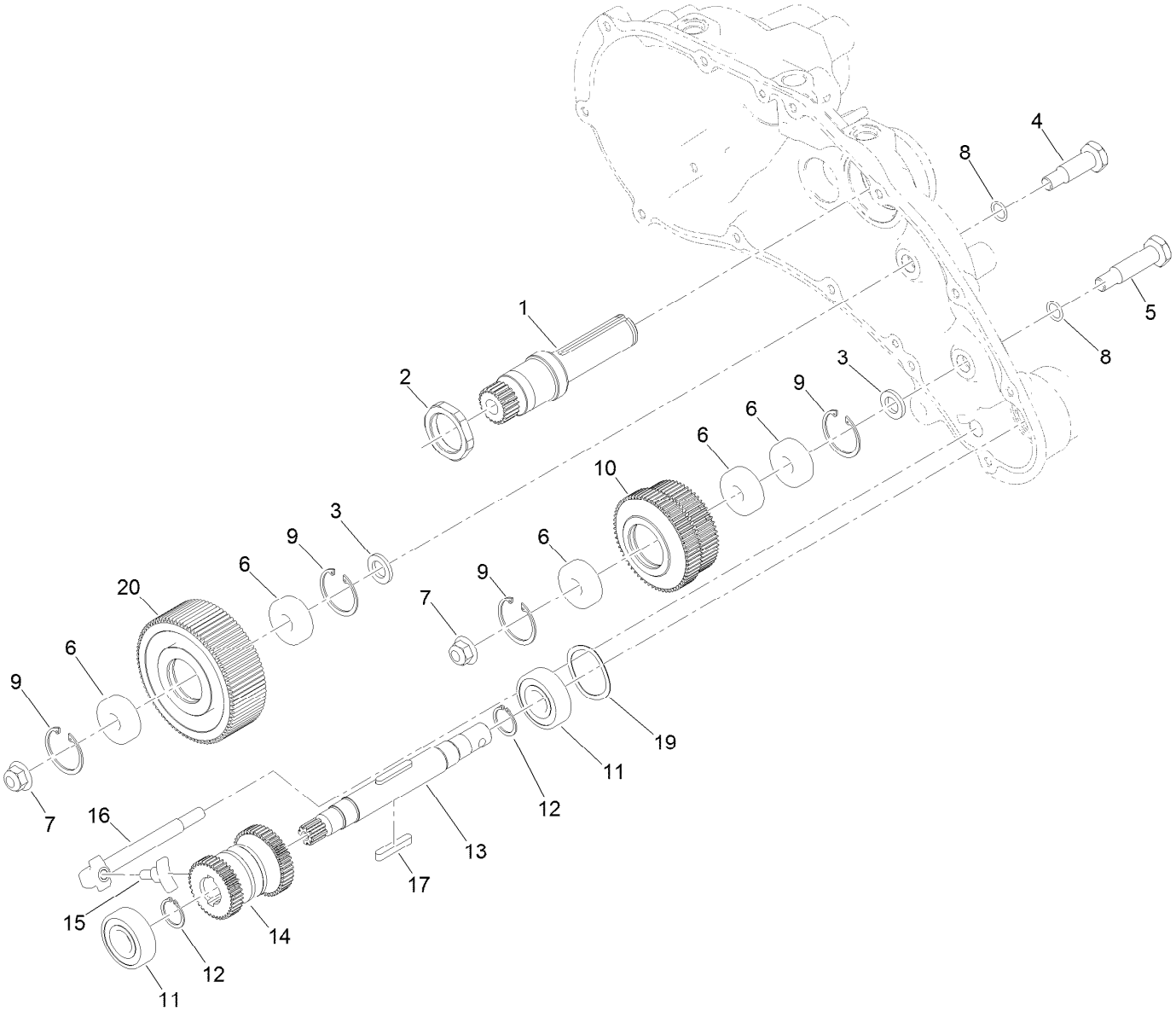

Transmission Gearbox Assembly No. 140-9324
Reel Drive Assembly

Ref.	Part Number	Qty.	Description
1	138-1509	1	Shaft-Input, 22T
2	138-1495	1	Nut-Lock, Thin
3	133-4553	2	Spacer-Bearing
4	133-4558	1	Pin-Bearing, Short
5	133-4557	1	Pin-Bearing, Long
6	49-2410	5	Bearing-Ball
7	104-8301	2	Nut-HF, NI
8	80-8460	2	O-Ring
9	138-1506	4	Ring-Retaining, Int (32MM)
10	137-0272	1	Gear-Spur, 60T/65T

Ref.	Part Number	Qty.	Description
11	38-7820	2	Bearing-Ball
12	138-1629	2	Ring-Retaining, EXT (17MM)
13	139-4359	1	Shaft-Drive, Reel
14	130-6834	1	Gear-Spur, Slider
15	133-9120	1	Shoe-Clutch, Reel
16	133-9121	1	Actuator-Clutch, Reel
17	103-2739	2	Key
19	131-3170	1	Spring-Wave
20	137-0273	1	Gear-Spur, 85T

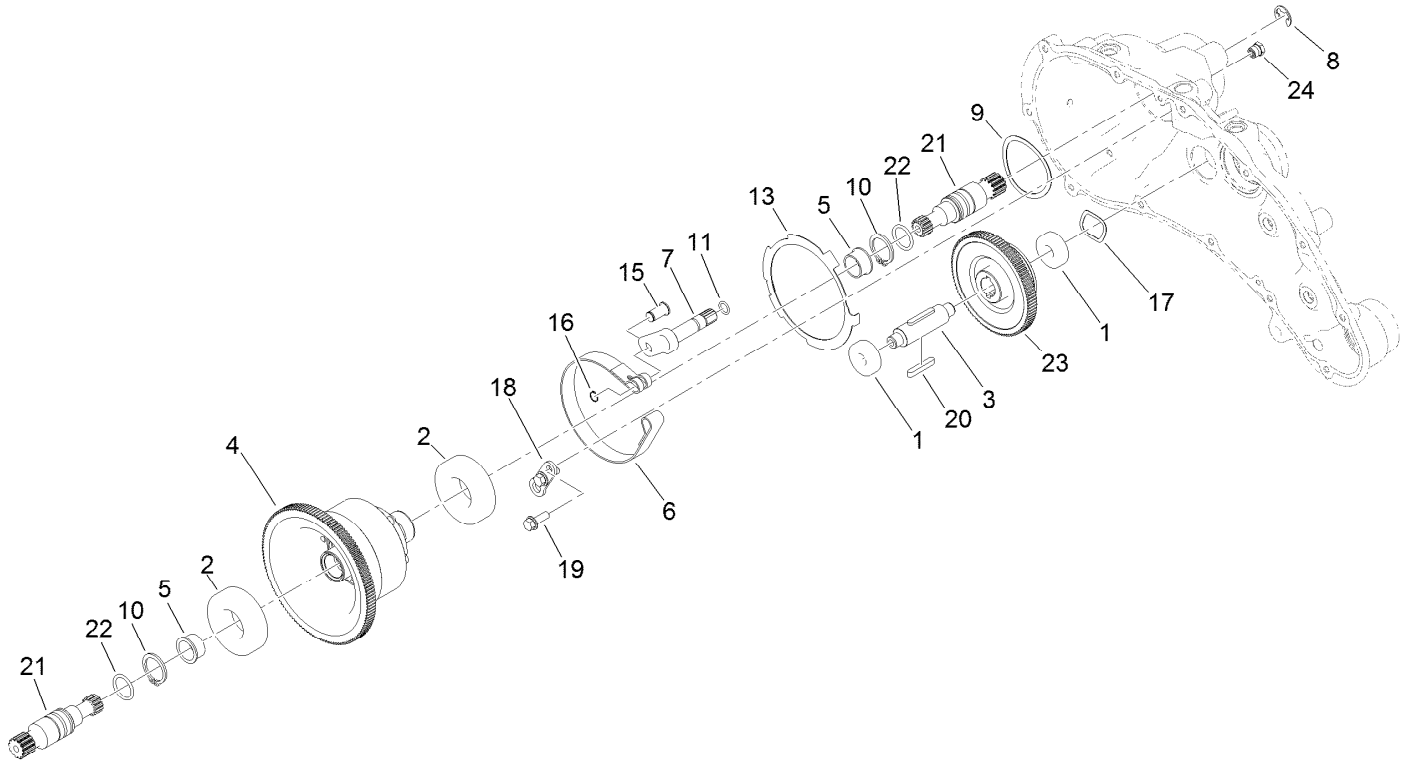

Transmission Gearbox Assembly No. 140-9324
Traction Drive Assembly

Ref.	Part Number	Qty.	Description
1	49-2410	2	Bearing-Ball
2	251-312	2	Bearing-Ball
3	137-0236	1	Shaft-Slider, Neutral
4	132-4555	1	Differential ASM
5	256-252	2	Bearing-Flange
6	140-9277	1	Band-Brake
7	132-4550	1	Lever-Brake
8	32120-47	1	Ring-Retaining, External
9	115-5258	1	Spring-Wire, Flat
10	32151-36	2	Ring-Retaining
11	237-22	1	O-Ring

Ref.	Part Number	Qty.	Description
13	140-9236	1	Plate-Retainer, Brake
15	120-9687	1	Pin-Clevis, Brake
16	32120-46	1	Ring-Retaining
17	112-5163	1	Washer-Wave
18	140-9279	1	Plate-Retainer, Pin
19	119-1138	2	Screw-HHF,Patch
20	103-2739	2	Key
21	130-6841	2	Shaft-Differential
22	237-159	2	O-Ring
23	137-0276	1	Gear-Spur, Neutral (93T)
24	133-4589	1	Fitting-Plug

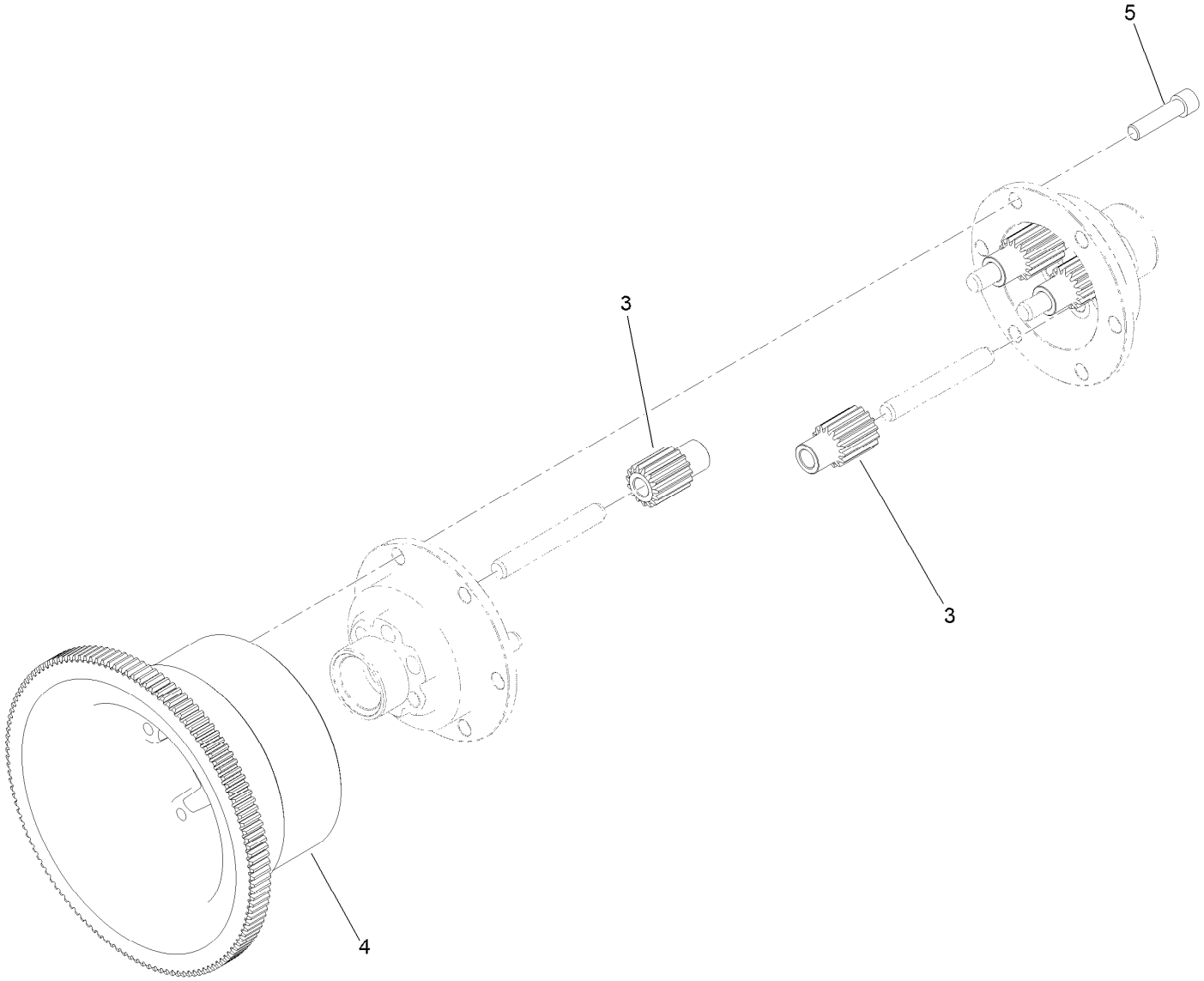

Differential Assembly No. 132-4555

Ref.	*Part Number*	*Qty.*	*Description*
3	130-6840	6	Gear-Spur, Differential
4	137-0294	1	Gear-Differential, 127T
5	3274-26	6	Screw-HSH

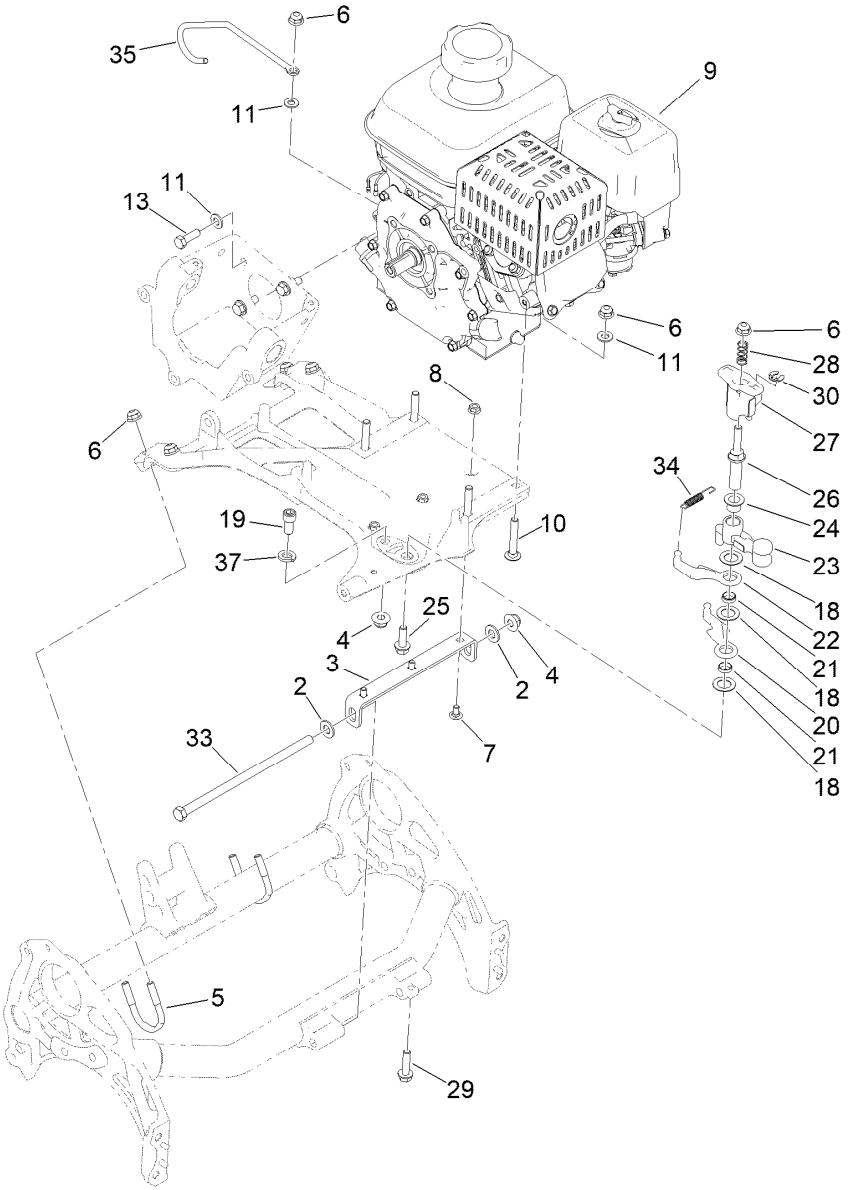

Engine Assembly

Ref.	Part Number	Qty.	Description
2	3256-24	2	Washer-Plain
3	138-1623-01	1	Bracket-Mount, Engine
4	119-4042	2	Nut-HF, NI
5	137-0301	2	Clamp-Tube
6	119-4041	9	Nut-HF
7	116-5611	3	Bolt-Carriage 1/4-20 X 1/2 Short Neck
8	32128-10	3	Nut-Lock, HHF
9	161-7372	1	Engine ASM, Honda ●
10	3230-6	4	Bolt-CARR
11	3256-23	8	Washer-Plain
13	131-5919	4	Screw-HH, Patch
18	139-7362	3	Washer-Poly
19	131-8573	1	Screw-HSH
20	138-1523	1	Reel Lever
21	133-9226	2	Bushing-Straight
22	138-1524	1	Lever-Reel
23	133-9206	1	Bellcrank-Reel
24	125-5239	1	Bushing-Flange
25	115-5142	1	Screw-HHF, Patch
26	137-0298	1	Shaft-Selector, Reel
27	137-0299	1	Hub-Selector, Reel
28	117-1031	1	Spring-Compression
29	112-6913	1	Screw-HF
30	32151-47	1	Ring-Retaining
33	323-30	1	Screw-HH
34	119-4609	1	Spring-Extension
35	139-4309	1	Guide-Cable
37	3253-21	1	Washer-Lock

● Obtain parts from www.honda-engines.com

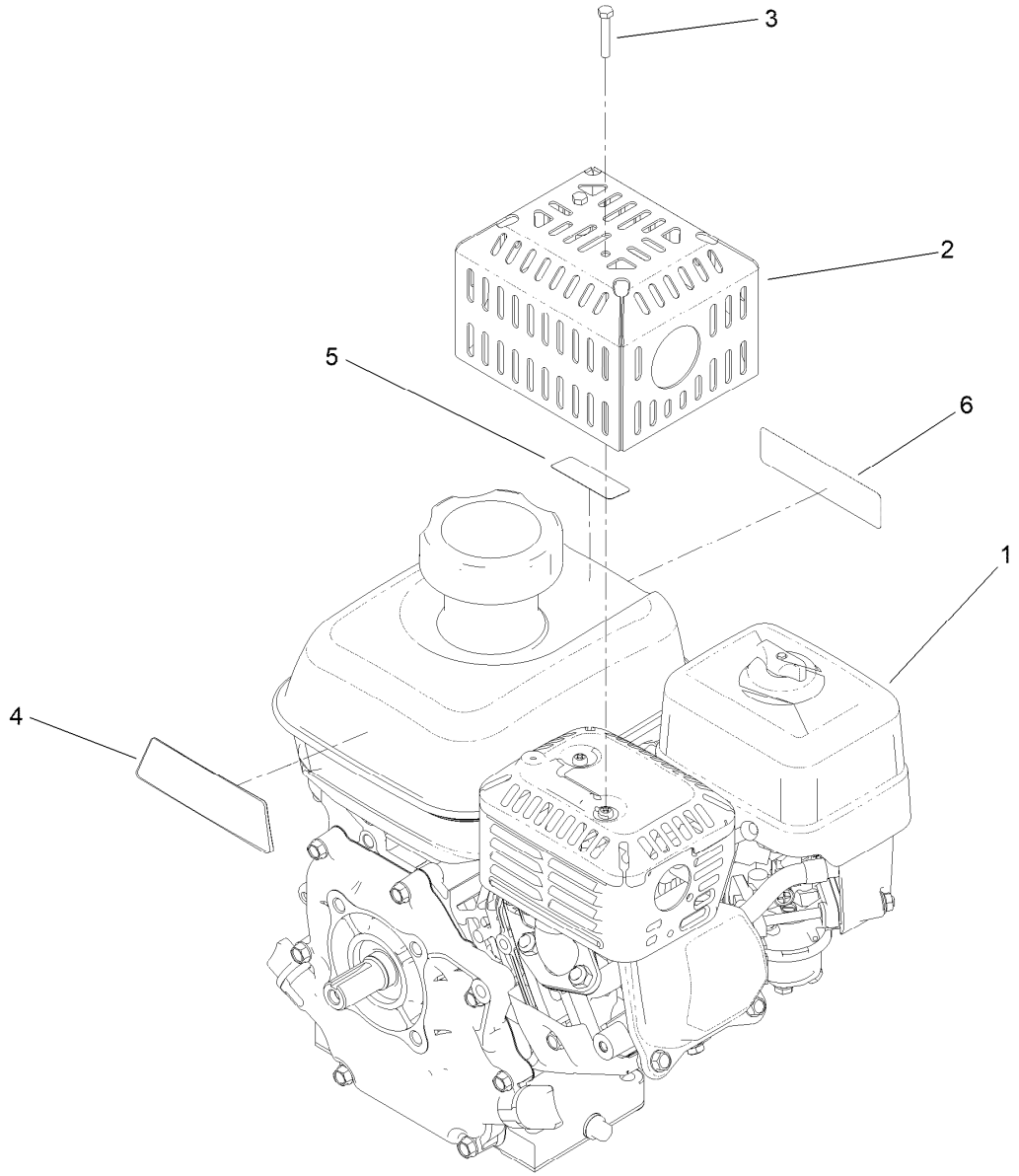

Engine Assembly No. 161-7372

Ref.	Part Number	Qty.	Description
1		1	Engine ASM, Honda ●■
2	138-2128-03	1	Guard-Muffler
3	87-5150	2	Screw-HH
4	138-2138	1	Decal-Warning, Engine
5	130-8322	1	Decal-Warning, Ethanol
6	133-8062	1	Decal-Spark Arrestor

● Not serviced separately

■ Obtain parts from www.honda-engines.com

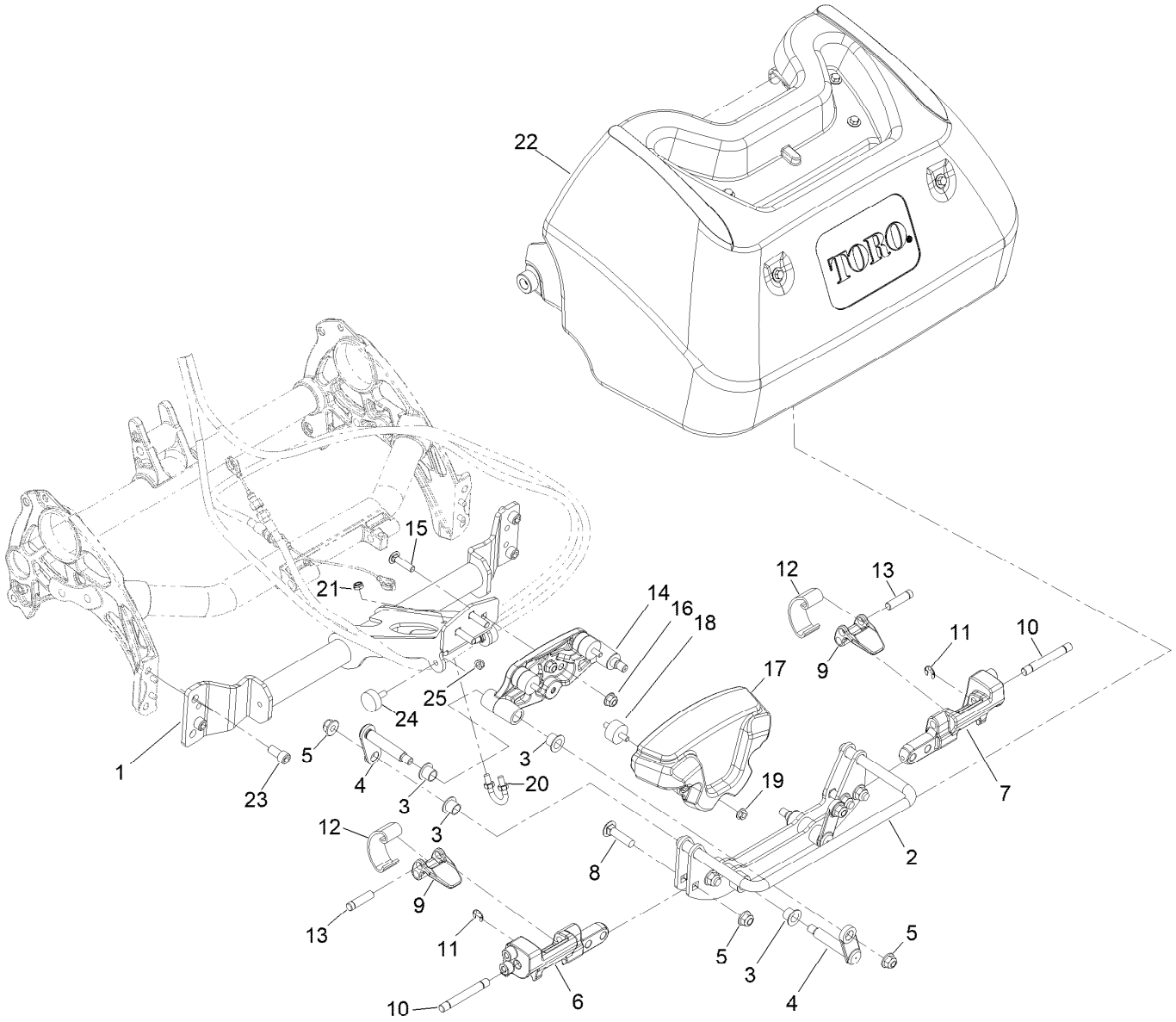

Frame Assembly

Ref.	Part Number	Qty.	Description
1	147-2297-01	1	Flex Frame Welded [red]
2	139-7397-01	1	Roll Frame ASM, Welded [red]
3	125-5239	8	Bushing-Flange
4	140-6437	4	Link Flex (Mach)
5	104-8301	8	Nut-HF, NI
6	139-7372	1	Hub-End, RH
7	139-7374	1	Hub-End, LH
8	3231-4	4	Screw-CARR
9	114-8047	2	Lever
10	139-7380	2	Pin-Pivot, Latch
11	32120-18	2	E-Ring
12	114-8048	2	Spring
13	114-8049	2	Pin-Pivot
14	139-7439	1	Frame-Link
15	99-6005	3	Bolt-Carriage
16	104-8300	3	Nut-HF, NI
17	140-3399-01	1	Weight-Tmd [red]
18	140-3356	3	Isolator-Tmd
19	32128-14	3	Nut-HF
20	01-170-0040	1	U-Bolt
21	3296-56	2	Nut-Lock, NI
22	121-4710	1	Grass Basket ASM
23	131-8573	4	Screw-HSH
24	138-2662	2	Bumper-Rubber
25	3296-56	2	Nut-Lock, NI

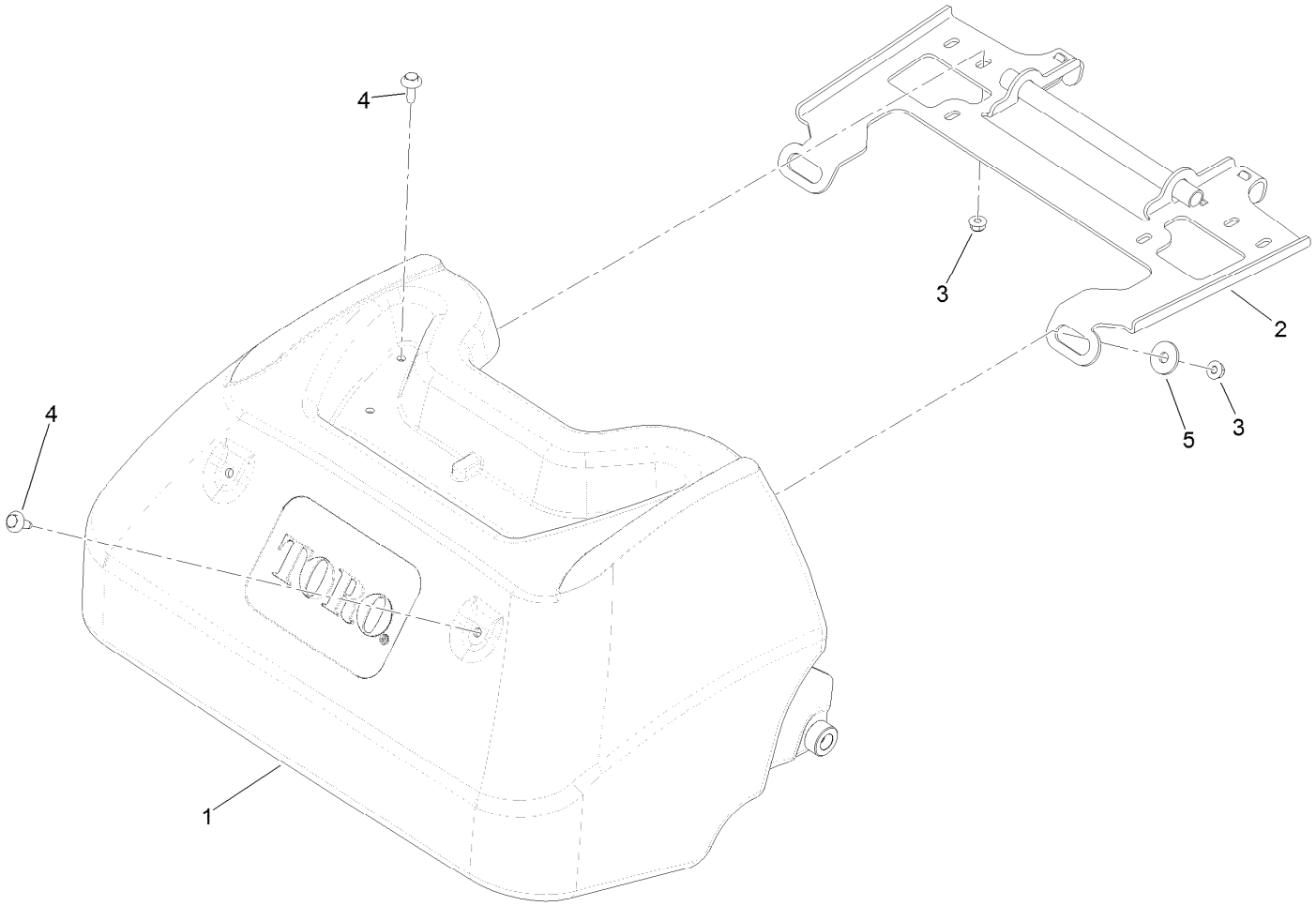

Grass Basket Assembly No. 121-4710

Ref.	Part Number	Qty.	Description
1	130-6750	1	Basket ASM
2	133-8833-03	1	Bracket-Basket
3	119-4040	6	Nut-HF, NI
4	119-4012	6	Screw-HWHTF
5	1-603716	2	Washer-Friction

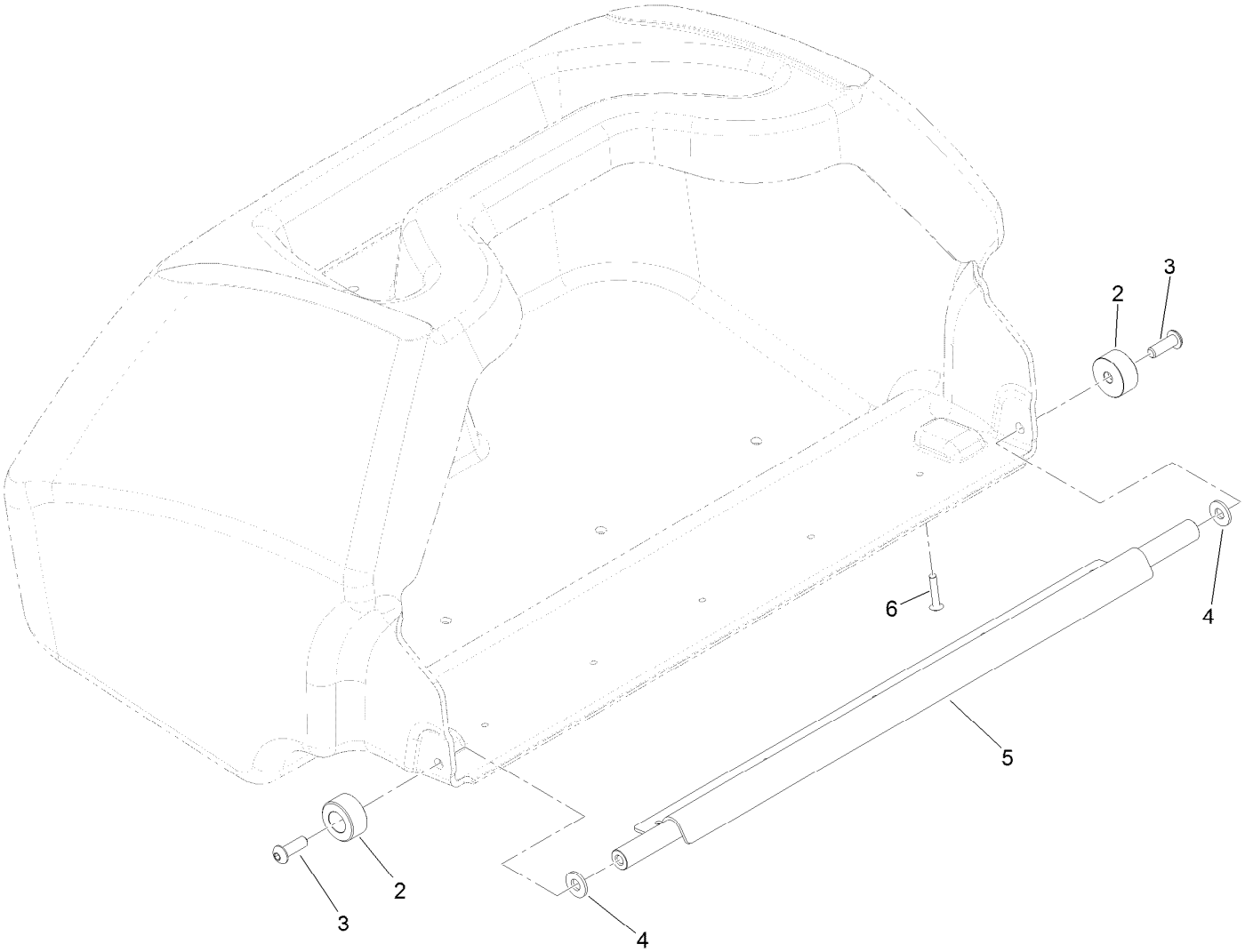

Basket Assembly No. 130-6750

Ref.	Part Number	Qty.	Description
2	121-4730	2	Bumper-Basket
3	3274-69	2	Screw-HSBH
4	120-9679	2	Washer-Flat
5	130-6752	1	Channel
6	3290-382	5	Rivet-Pop

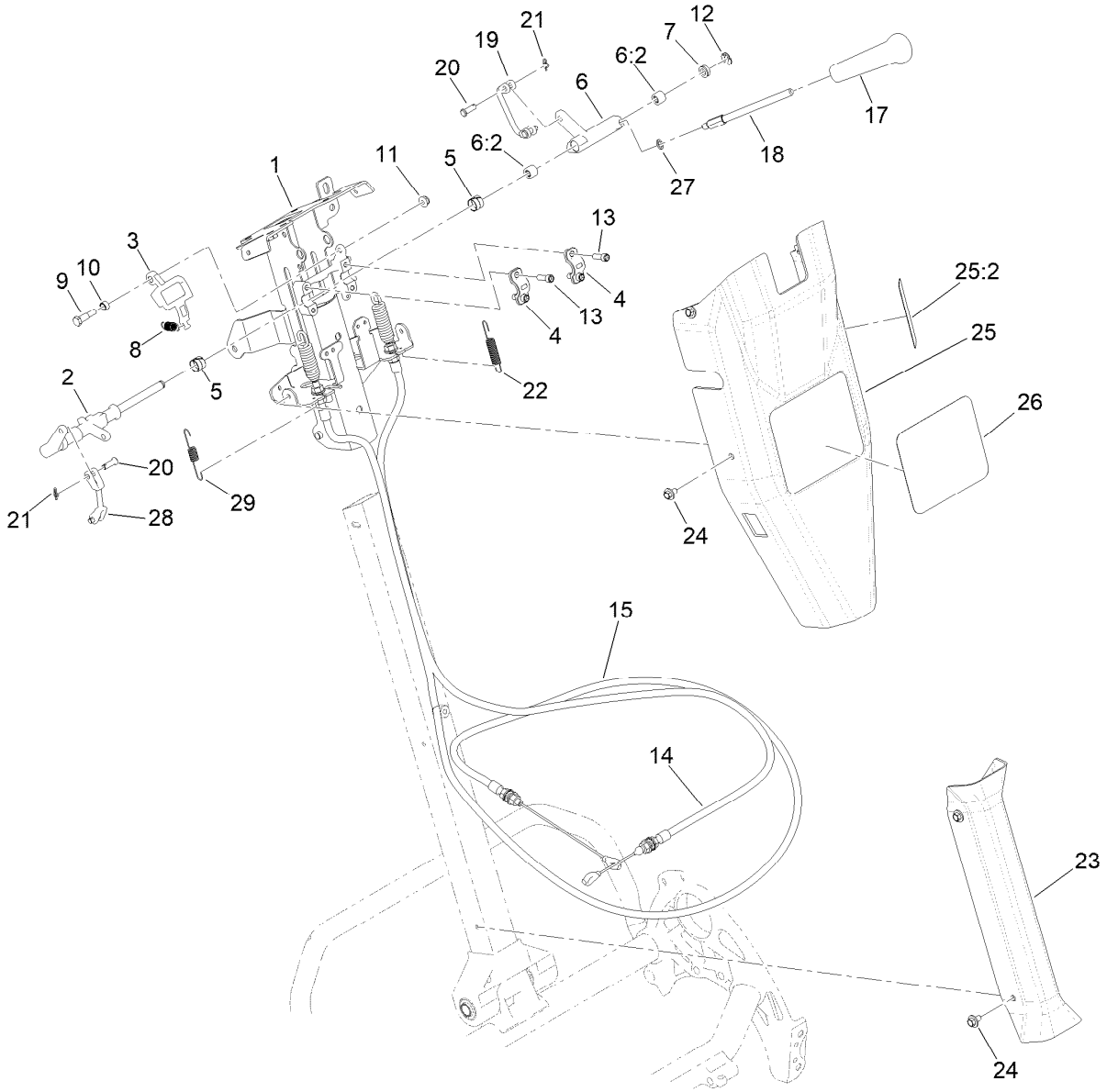

Reel Controls and Covers Assembly

Ref.	Part Number	Qty.	Description
1	147-2288	1	Kit- Upper Receiver Replacement
2	140-9305	1	Shaft-Main, Controls
3	137-0266	1	Cam-Latch, Upper
4	138-1513	2	Clamp-Shaft, Control
5	137-0263	2	Bushing-Split
6	137-0312	1	Reel Lever ASM
6:2	138-1637	2	Bearing-Needle
7	131-3187	1	Seal-V-Ring
8	140-3410	1	Spring-Extension
9	137-0313	1	Screw-Shoulder
10	137-0346	1	Spacer-Latch, Bail
11	104-7201	1	Nut-HF, NI
12	32151-47	1	Ring-Retaining
13	140-9233	4	Screw-HSH
14	137-0180	1	Cable-Clutch
15	140-9330	1	Cable-Reel Engagement

Ref.	Part Number	Qty.	Description
17	104-9760	1	Knob-Black
18	137-0190	1	Rod-Handle, Reel Lever
19	137-0232	1	Connector-Clevis
20	1-808265	4	Pin-Clevis
21	138-1587	2	Clip-Pin, Cotter
22	138-1536	1	Spring-Extension
23	138-1479	1	Cover-Handle, Lower
24	46-6810	8	Screw And Washer ASM
25	139-4304	1	Control Upper Cover ASM
25:2	138-1589	1	Decal-Reel Drive Engagement
26	140-3382	1	Decal-Greensmaster Flex 1018
27	75-5470	1	Spacer-Bearing
28	138-1592	1	Connector-Clevis
29	140-3417	1	Spring-Extension

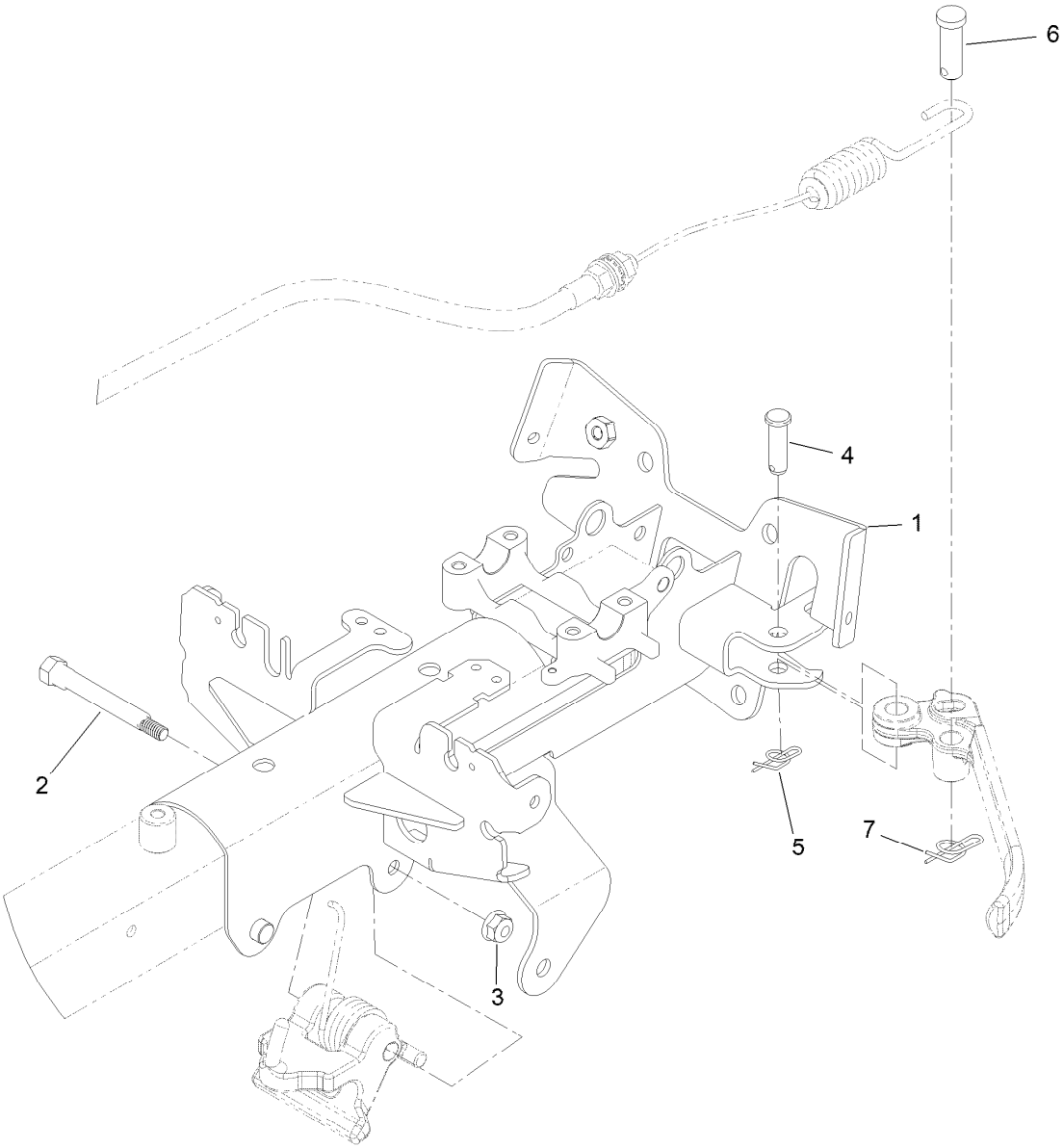

Upper Receiver Assembly No. 147-2288

Ref.	*Part Number*	*Qty.*	*Description*
1	147-2284-0P	1	Upper Receiver, Welded
2	147-2269	1	Cam-Handle, Pivot
3	119-4040	1	Nut-HF, NI
4	283-61	1	Pin-Yoke
5	116-6639	1	Pin-Cotter, Locking
6	1-808285	1	Pin-Clevis
7	140-9312	1	Pin-Cotter, Locking

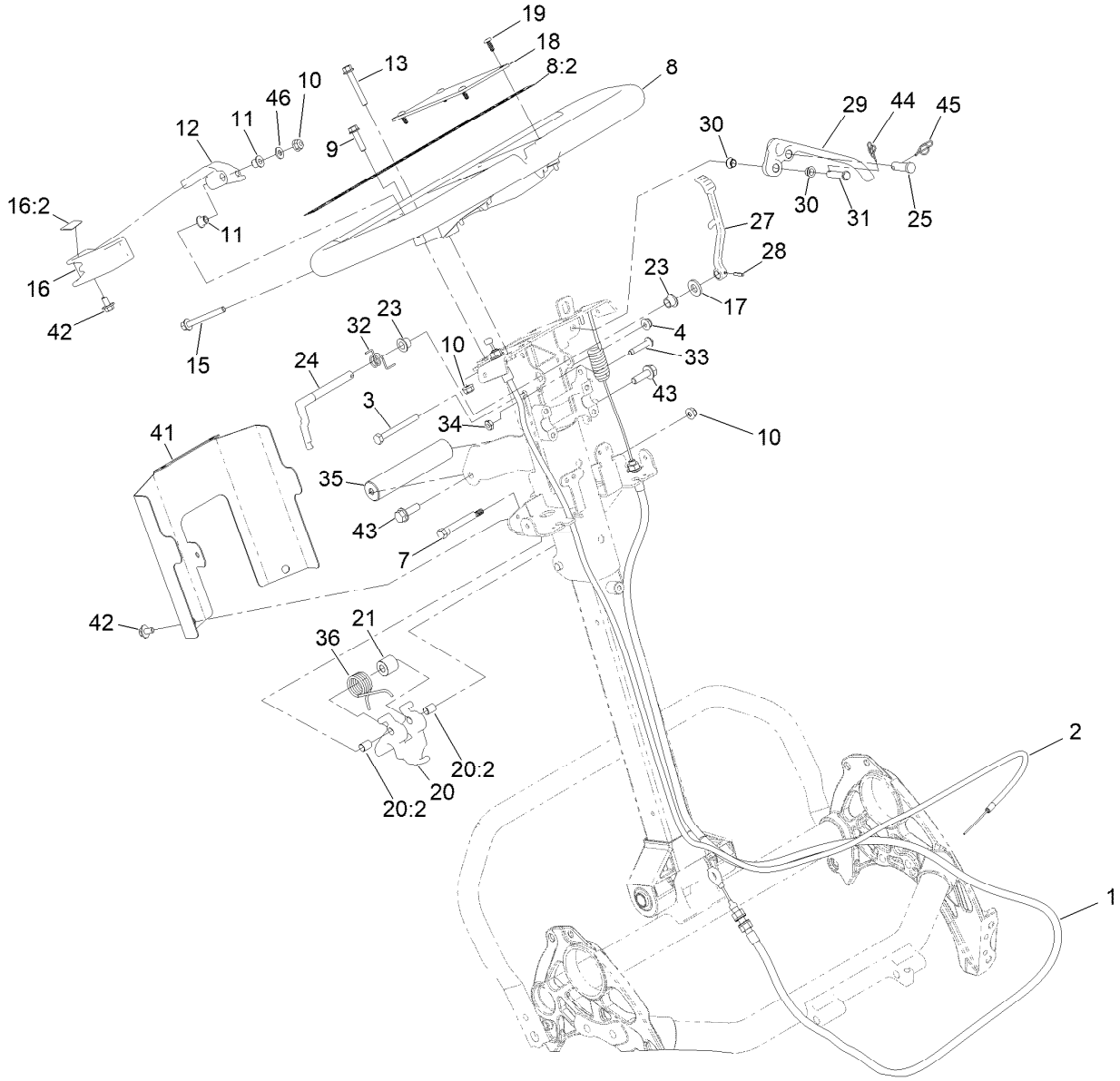

Upper Handle Assembly

Ref.	Part Number	Qty.	Description
1	140-9318	1	Cable ASM, Brake
2	137-0182	1	Cable-Throttle
3	321-15	1	Screw-HH
4	104-7201	1	Nut-HF, NI
7	147-2269	1	Cam-Handle, Pivot
8	138-1645	1	Handle ASM
8:2	138-5532	1	Decal-Warning, General
9	120-4654	2	Screw-HHF
10	119-4040	4	Nut-HF, NI
11	138-3538	2	Bushing-Flange
12	138-1636	1	Arm-Throttle
13	138-5527	1	Screw-HHF
15	140-9317	1	Screw-HHF,Lock
16	139-4303	1	Throttle Lever ASM
16:2	138-5534	1	Decal-Throttle
17	100-4852	1	Washer-Hardened
18	138-5514	1	Plate-Notepad, Handle
19	127-6843	4	Screw-Plastite, Torx Pan
20	137-0317	1	Handle Adjuster ASM
20:2	137-0308	2	Bushing-Igus

Ref.	Part Number	Qty.	Description
21	140-9335	1	Spacer-Spring
23	138-1514	2	Bushing-Flange
24	138-1573	1	Latch-Brake
25	1-808285	1	Pin-Clevis
27	140-3377	1	Lever-Lock, Brake
28	32121-73	1	Pin-Roll
29	140-9298	1	Lever-Brake
30	138-5538	2	Bushing-Flange
31	283-6	1	Pin-Clevis
32	138-1518	1	Spring-Brake, Torsion
33	132-6777	1	Screw-Twh Thd Roll
34	120-9695	1	Nut-Jam
35	138-1535	1	Handle-Assist, Lift
36	140-9334	1	Spring-Handle, Torsion
41	138-5530-03	1	Cover-Bottom, Controls
42	46-6810	3	Screw And Washer ASM
43	115-5142	2	Screw-HHF, Patch
44	116-6639	1	Pin-Cotter, Locking
45	140-9312	1	Pin-Cotter, Locking
46	139-1323	2	Washer-Spcl

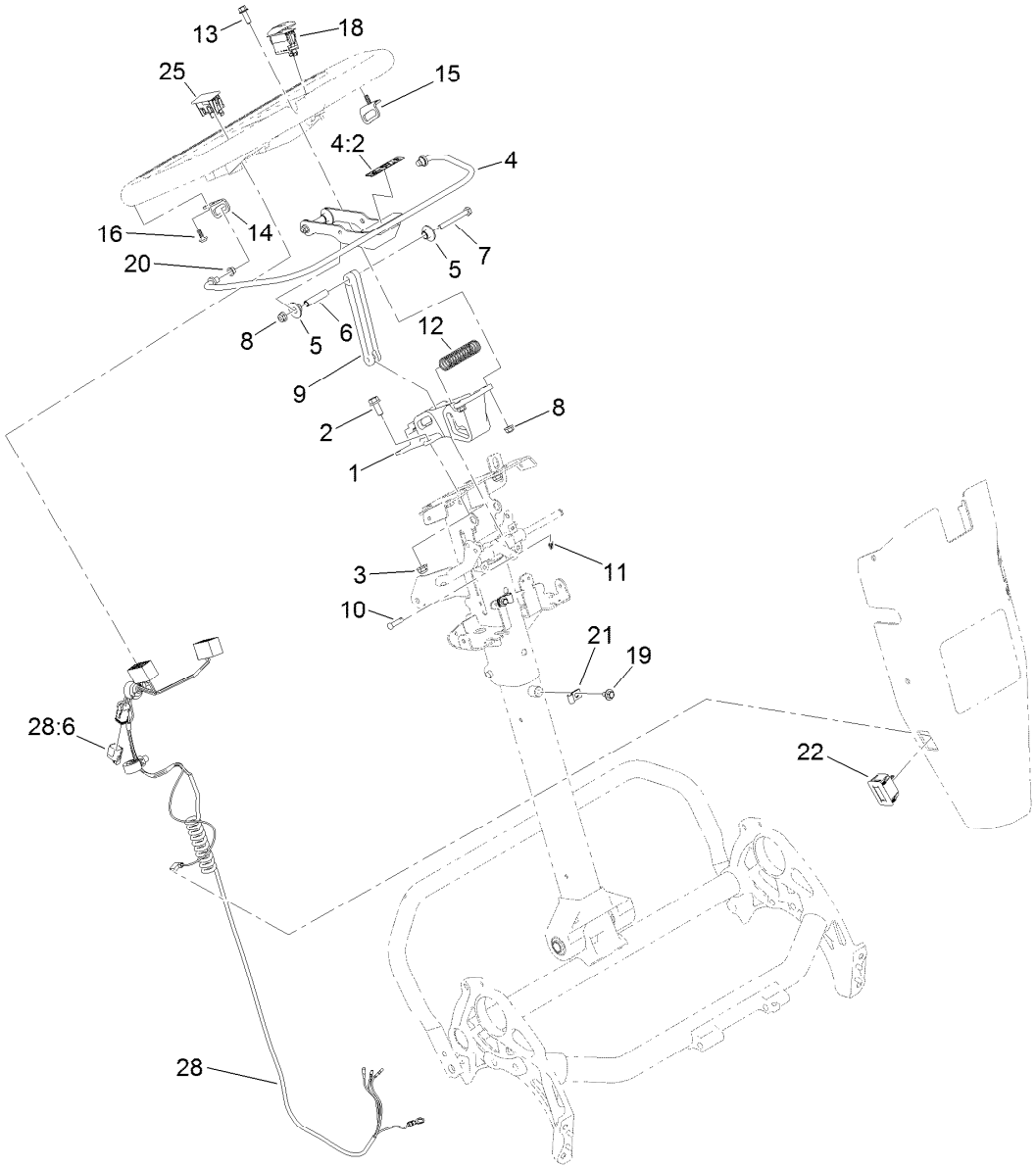

Traction Bail Assembly

Ref.	Part Number	Qty.	Description
1	138-5524	1	Mount-Handle
2	3234-47	2	Screw-HHF
3	119-4041	2	Nut-HF
4	139-4302	1	Clutch Bail ASM
4:2	138-5533	1	Decal-Bail, Traction
5	138-3466	4	Bushing-Flange
6	138-3465	2	Spacer-Tube
7	321-18	2	Screw-HH
8	119-4040	4	Nut-HF, NI
9	138-5515	1	Link-Bail, Clutch
10	353-322	1	Pin-Clevis
11	138-1587	1	Clip-Pin, Cotter
12	138-3468	1	Spring-Compression

Ref.	Part Number	Qty.	Description
13	120-9678	2	Screw-HHF
14	138-3539	1	Bracket-Bail, RH
15	138-3540	1	Bracket-Bail, LH
16	138-5775	2	Screw-Delta Point
18	122-1497	1	Switch-Rocker, On-None-Off
19	46-6810	2	Screw And Washer ASM
20	138-5538	2	Bushing-Flange
21	2412-91	2	Clamp
22	119-1347	1	Meter-Hour
25	119-7791	1	Plug-Hole
28	122-1416	1	Harness-Wire
28:6	32180-091	1	Cap-Dust, 2 Way

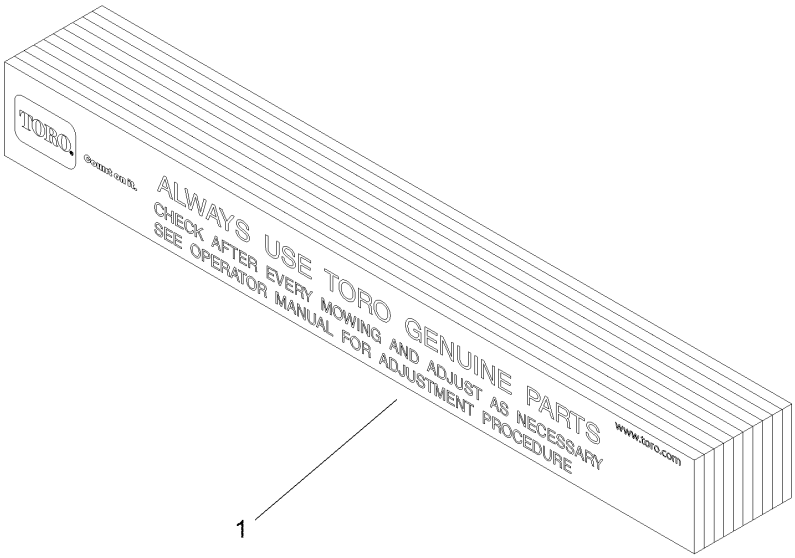

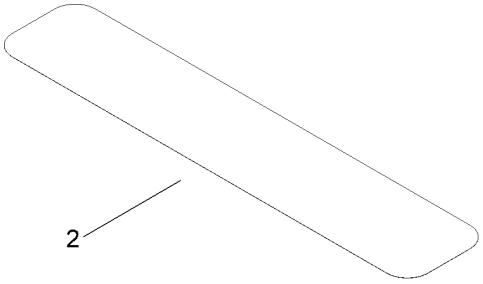

Miscellaneous Parts Assembly

Ref.	*Part Number*	*Qty.*	*Description*
1	125-5610	1	Paper-Reel, Toro (10 Pack)
2	140-5531	1	Shim-Toro Reel (.002In)

Attachments and Accessories

For 04850 Greensmaster Flex 1018 Traction Unit

Product Name	Model/Part
Narrow Wiehle Roller Kit, Greensmaster Flex 1018 Traction Unit	04026
Wheel Kit	04123
Light Kit (2019+)	04135
Push Broom Kit, Walk Greensmower (2019+)	04136
CU Light Kit Mount	04138
Wheel Loading Kit, Tp200	04219
Rail Loading Kit, Tp200	04229
Trans Pro 80 Tow-Behind Trailer	04238
TRANS PRO 200	04239
Flat Ramp	04245
Rail Ramp Kit (Update)	04247
18in Soft Grooming Brush	04268
18in Stiff Grooming Brush	04269
Turf Evaluator	04399
Universal Groomer Drive Kit	04648
18in Twin Tip Groomer Reel	04801
Full Front Roller Asm (18 Inch)	04814
14-Blade 18in Flex ES CU	04854
Bedbar	110-2281-01
Bedbar-Aggressive	110-2281-0P
Bedknife-Microcut, Extended	110-2300
Bedknife-Low Cut	110-2301
18in Rail Conversion Kit	110-7345
Paint-Black Bottle	112-0176
Paint-Red Bottle	112-0178
Roller Extension Kit	115-7361
Bedknife-EDGEMAX, Microcut	117-1530
Bedknife-EDGEMAX, Tournament	117-1532
High Height-of-Cut Arms (Qty 1)	120-9600
Rear Roller Adjustment (Qty 1)	120-9602
Front Scraper Kit for Narrow Wiehle Roller	120-9615
Front Scraper Kit for Wide Wiehle Roller	120-9616
Front Scraper Kit for Full Roller	120-9617
Front Brush Kit for Narrow Wiehle Roller	120-9621
Front Brush Kit for Wide Wiehle Roller	120-9622
Front Brush Kit for Full Roller	120-9623
Rear Roller Scraper Kit with Roller	120-9627
MVP Kit-Cutting Unit Re-Build	121-2637
Steel Rear Roller ASM	121-4682
Premium Engine Oil 10w30 (55 Gallon Drum)	121-6392
Premium Engine Oil 10w30 (5 Gallon Pail)	121-6393
Toro Reel Paper (10 Pack)	125-5610
18in Soft Grooming Brush Kit	127-1545
18in Stiff Grooming Brush Kit	127-1546
Angle Indicator	131-6828
Angle Indicator Mount	131-6829

Attachments and Accessories (continued)

Grease-Synthetic 136-8595
Rail Ramp Kit TP100 138-5011
Bedknife-EDGEMAX, Microcut Short 139-4318
Bedknife-EDGEMAX, Tournament Short 139-4319
Access Backlap Kit 139-4342
Wireless Hour Meter Kit 139-4369
Rod Replacement Kit, Greensmaster 1018 Series Traction Unit with Trans Pro 100 Tow-Behind Trailer 139-6470
Retention Straps Kit 139-6477
Roller ASM, Wide Wiehle 140-3441
Shim-TORO Reel (.002in) 140-5531
Blade-GR Groomer, Twin Tip (0.032in) 140-5580
Blade-GR Groomer, Helix (0.028in) 140-5581
Blade-GR Groomer, Helix (0.015"in) 140-5582
Roller ASM, Extended Wiehle 140-9214
Rear Roller ASM, 18 Inch 140-9258
Kit-flex Roller Bracket, Tp80 147-2291
Toro Red 12oz Aerosol Can 361-10
Semi-Gloss Black Spray Paint 361-9
Height-of-Cut Bar 94-9010
Bedknife-Tournament 98-7260
Bedknife-Microcut 98-7261

Notes:

Notes:

TORO®

Count on it.