Form No. 3471-401 Rev A

TORO®

Count on it.

Operator's Manual

Workman® MDX Lithium Utility Vehicle

Model No. 08303—Serial No. 418000000 and Up
Model No. 08303TC—Serial No. 418100000 and Up

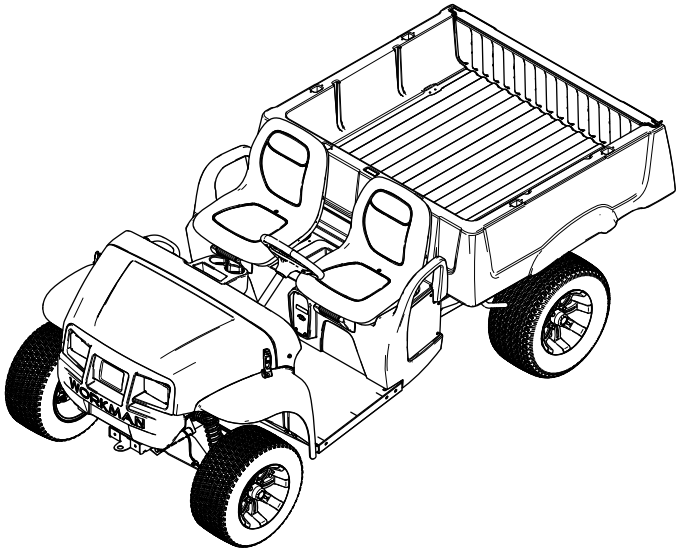

Register at www.Toro.com.
Original Instructions (EN)

CE UK CA

3471-401

This product complies with all relevant European directives; for details, please see the separate product specific Declaration of Conformity (DOC) sheet.

If this machine is equipped with a telematics device, refer to your authorized Toro distributor for instructions to activate the device.

Electromagnetic Compatibility Certification

Domestic: This device complies with FCC Rules Part 15. Operation is subject to the following two conditions: (1) This device may not cause harmful interference and (2) this device must accept any interference that may be received, including interference that may cause undesirable operation.

FCC ID: APV-3640LB

IC: 5843C-3640LB

This equipment has been tested and found to comply within the limits for a Class B digital device, pursuant to part 15 of the FCC Rules. These limits are designed to provide reasonable protection against harmful interference in a residential installation. This equipment generates, uses, and can radiate radio frequency energy and, if not installed and used in accordance with the instructions, may cause harmful interference to radio communications. However, there is no guarantee that interference will not occur in a particular installation. If this equipment does cause harmful interference to radio or television reception, which can be determined by turning the equipment off and on, the user is encouraged to try to connect the interference by one or more of the following measures:

- Reorient or relocate the receiving antenna.
- Increase the separation between the equipment and receiver.
- Connect the equipment into an outlet on a circuit different from that to which the receiver is connected.
- Consult the dealer or an experienced radio/TV technician for help.

Argentina

H-31397

Australia

Morocco

AGREE PAR L'ANRT MAROC

Numéro d'agrément: MR00004789ANRT20024

Date d'agrément: 11/4/2024

New Zealand

R-NZ

South Korea

R-R-Tor-HMU3640LB

⚠ WARNING

CALIFORNIA
Proposition 65 Warning

The power cord on this product contains lead, a chemical known to the State of California to cause birth defects or other reproductive harm. Wash hands after handling.

Battery posts, terminals, and related accessories contain lead and lead compounds, chemicals known to the State of California to cause cancer and reproductive harm. Wash hands after handling.

Introduction

This utility vehicle is intended to be primarily used off-highway to transport people and material loads. Using this product for purposes other than its intended use could prove dangerous to you and bystanders.

Read this information carefully to learn how to operate and maintain your product properly and to avoid injury and product damage. You are responsible for operating the product properly and safely.

Visit www.Toro.com for product safety and operation training materials, accessory information, help finding a dealer, or to register your product.

Whenever you need service, genuine Toro parts, or additional information, contact an Authorized Service Distributor or Toro Customer Service and have the model and serial numbers of your product ready. Figure 1 identifies the location of the model and serial numbers on the product. Write the numbers in the space provided.

Important: **With your mobile device, you can scan the QR code on the serial number decal (if equipped) to access warranty, parts, and other product information.**

© 2025—The Toro® Company
8111 Lyndale Avenue South
Bloomington, MN 55420

Contact us at www.Toro.com.
Printed in the USA
All Rights Reserved

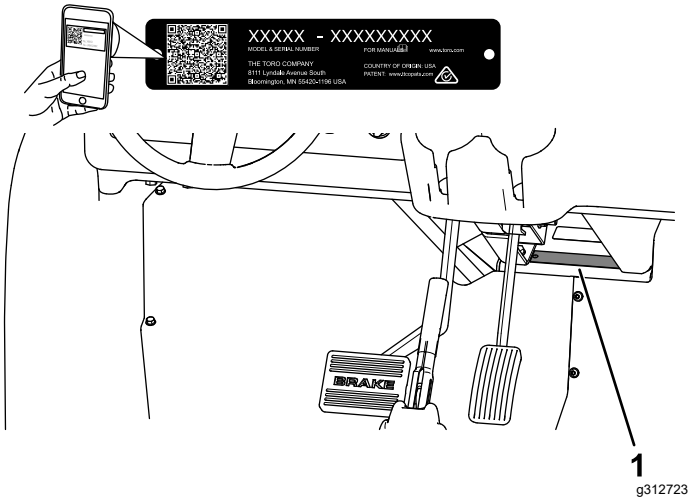

Figure 1

1. Model and serial number location

Model No. _____

Serial No. _____

Contents

Safety 5
Safety-Alert Symbol 5
General Safety 5
Safety and Instructional Decals 6
Setup 9
1 Installing the Steering Wheel 9
2 Charging the Machine 10
3 Checking the Fluid Levels and Tire Pressure 10
4 Burnishing the Brakes 10
Product Overview 11
Controls 11
Display 13
Specifications 17
Attachments/Accessories 17
Before Operation 18
Before Operation Safety 18
Performing Daily Maintenance 18
Checking the Tire Pressure 18
Breaking in a New Machine 18
During Operation 18
During Operation Safety 18
Operating the Cargo Bed 20
Monitoring the Battery-System Charge Level 22
Stopping the Machine 22
Loading the Cargo Bed 23
After Operation 24
After Operation Safety 24
Hauling the Machine 25
Towing the Machine 25
Towing a Trailer 25
Transporting the Lithium-Ion Batteries 26
Understanding the Lithium-Ion Battery Charger 26
Maintenance 28
Maintenance Safety 28
Recommended Maintenance Schedule(s) 28
Daily Maintenance Checklist 30
Maintaining the Machine under Special Operating Conditions 30
Pre-Maintenance Procedures 31
Preparing the Machine for Maintenance 31
Lifting the Machine 31
Accessing the Hood 31
Lubrication 32
Greasing the Front Wheel Bearings 32
Electrical System Maintenance 35
Using the Battery-Disconnect Switch 35
Servicing the Batteries 35
Maintaining the Lithium-Ion Batteries 35
Maintaining the Battery Charger 35
Locating the Fuses 35
Maintaining the Headlights 36
Drive System Maintenance 38
Maintaining the Tires 38

Inspecting the Steering and Suspension Components 38
Adjusting the Front Wheel Alignment 38
Checking the Transaxle-Fluid Level 39
Changing the Transaxle Fluid 40
Brake Maintenance 41
Inspecting the Brakes 41
Checking the Brake-Fluid Level 41
Changing the Brake Fluid 41
Chassis Maintenance 42
Adjusting the Cargo-Bed Latches 42
Cleaning 42
Washing the Machine 42
Storage 43
Storage Safety 43
Storing the Machine 43
Battery Storage Requirements 43

Safety

Safety-Alert Symbol

The safety-alert symbol (Figure 2) shown in this manual and on the machine identifies important safety messages that you must follow to prevent accidents.



g000502

Figure 2

Safety-alert symbol

The safety-alert symbol appears above information that alerts you to unsafe actions or situations and is followed by the word **DANGER**, **WARNING**, or **CAUTION**.

DANGER indicates an imminently hazardous situation which, if not avoided, **will** result in death or serious injury.

WARNING indicates a potentially hazardous situation which, if not avoided, **could** result in death or serious injury.

CAUTION indicates a potentially hazardous situation which, if not avoided, **may** result in minor or moderate injury.

This manual uses two other words to highlight information. **Important** calls attention to special mechanical information and **Note** emphasizes general information worthy of special attention.

General Safety

This product is capable of causing personal injury. Always follow all safety instructions to avoid serious personal injury.

- Read and understand the contents of this *Operator's Manual* before you start the machine. Ensure that everyone using this product knows how to use it and understands the warnings.
- Use your full attention while operating the machine. Do not engage in any activity that causes distractions; otherwise, injury or property damage may occur.
- Do not put your hands or feet near moving components of the machine.
- Do not operate the machine without all guards and other safety protective devices in place and working on the machine.
- Keep bystanders and children out of the operating area. Never allow children to operate the machine.
- Stop and shut off the machine and remove the key before servicing.

Improperly using or maintaining this machine can result in injury. To reduce the potential for injury, comply with these safety instructions and always pay attention to the safety-alert symbol ⚠, which means Caution, Warning, or Danger—personal safety instruction. Failure to comply with these instructions may result in personal injury or death.

Safety and Instructional Decals

Safety decals and instructions are easily visible to the operator and are located near any area of potential danger. Replace any decal that is damaged or missing.

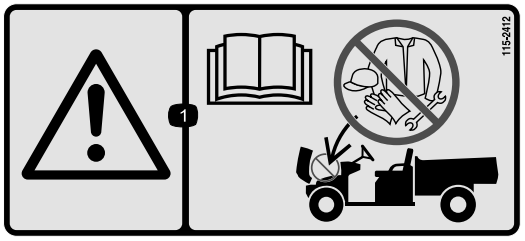

decal115-2412

115-2412

1. Warning—read the *Operator's Manual*; no storage.

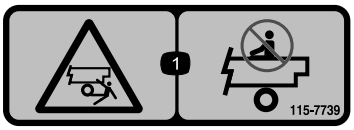

decal115-7739

115-7739

1. Falling, crushing hazard—do not carry passengers.

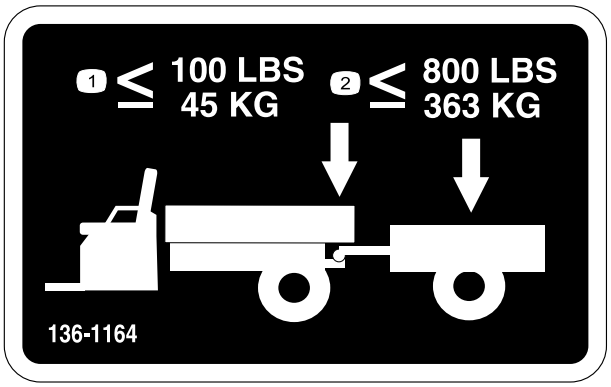

decal136-1164

136-1164

1. Do not exceed a tongue weight of 45 kg (100 lb).
2. Do not exceed a transport load of 363 kg (800 lb).



decal140-0924

140-0924

1. Eco mode
2. Performance mode

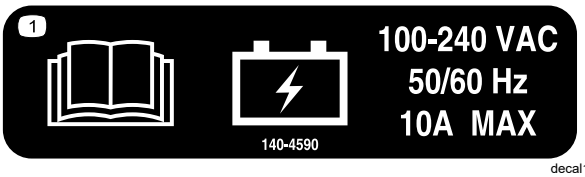

decal140-4590

140-4590

1. Read the *Operator's Manual* for battery information.



decal144-0275

144-0275

1. Batteries are flammable.

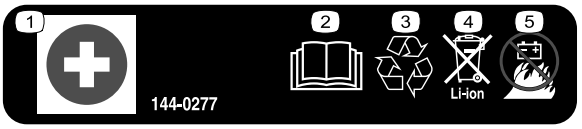

decal144-0277

144-0277

1. Positive terminal
2. Read the *Operator's Manual*.
3. Recycle the battery.
4. Do not dispose improperly.
5. Do not expose to fire.

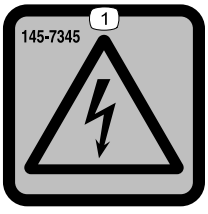

decal145-7345

145-7345

1. Electrical shock hazard

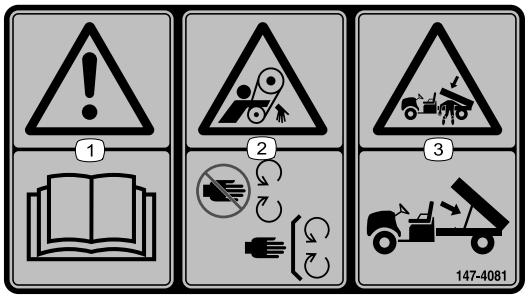

decal147-4081

147-4081

1. Warning—read the *Operator's Manual*.
2. Entanglement hazard, belt—stay away from moving parts; keep all guards in place.
3. Crushing hazard, cargo box—use the prop rod to support the cargo bed.

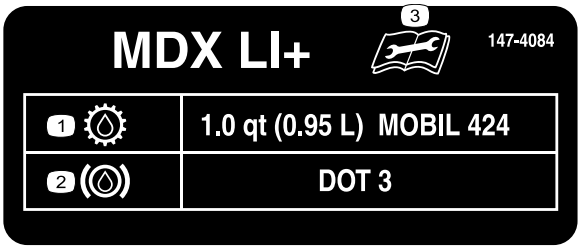

decal147-4084

147-4084

1. Transmission fluid
2. Brake fluid
3. Read the *Operator's Manual* before performing maintenance.

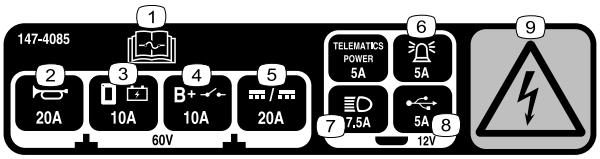

decal147-4085

147-4085

1. Read the *Operator's Manual* for fuse information.
2. Horn
3. Display power
4. Main system B+
5. DC to DC
6. Alarm
7. Headlights
8. USB
9. Electrical shock hazard



decal147-8185

147-8185

1. USB plug

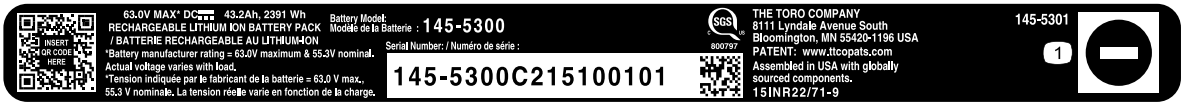

decal145-5301

145-5301

1. Negative battery terminal



decal145-5338

145-5338

1. Warning—read the *Operator's Manual*.
2. Warning—do not open the battery; do not use a damaged battery.
3. Explosion hazard—do not expose to sparks or open flame.
4. Electric shock hazard—do not perform maintenance on the battery.
5. Electric shock hazard

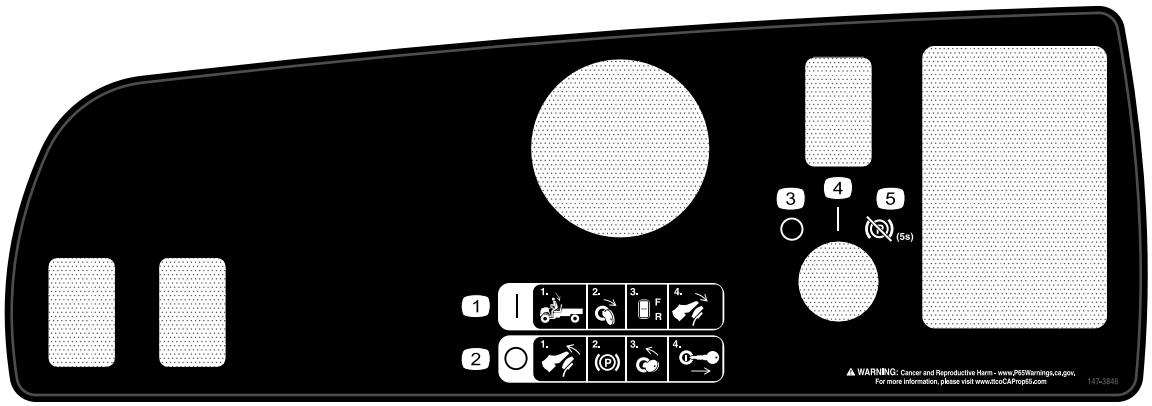

decal147-3846

147-3846

1. Turning on—1) Sit in the operator's seat; 2) Turn the key switch to the ON position; 3) Select a direction on the direction-selector switch; 4) Push down on the pedal.
2. Turning off—1) Release the pedal; 2) Engage the parking brake; 3) Turn the key switch to the OFF position; 4) Remove the key from the key switch.
3. Off
4. On
5. Parking brake—Disengage (hold for 5 seconds)



decal147-4080

147-4080

1. Warning—read the *Operator's Manual* and receive training before operating the machine.
2. Tipping hazard—drive slowly on or across inclines; take turns slowly; do not exceed speeds of 31 kph (19 mph); drive slowly when hauling a load or when driving on uneven terrain.
3. Falling hazard; severing hazard of hand or foot—do not carry passengers in the bed; do not carry a third passenger; do not put your hands or feet outside the machine while operating.
4. Collision hazard—do not operate the machine on public streets, roads, or highways.
5. Falling hazard—do not allow children to operate the machine.

Setup

Loose Parts

Use the chart below to verify that all parts have been shipped.

Procedure	Description	Qty.	Use
1	Steering wheel Screw Spring Wheel cover Wheel clip	1 5 2 1 1	Install the steering wheel (Model 08303TC only).
2	No parts required	–	Charge the machine.
3	No parts required	–	Check the fluid levels and tire pressure.
4	No parts required	–	Burnish (break-in) the brakes.

1

Installing the Steering Wheel

Model 08303TC Only

Parts needed for this procedure:

1	Steering wheel
5	Screw
2	Spring
1	Wheel cover
1	Wheel clip

Procedure

Refer to Figure 3 for this procedure.

1. Place the steering wheel on the steering shaft.

   Ensure that the steering wheel is centered (i.e., the flat bottom should be parallel with the ground).
2. Use the locknut to secure the steering wheel to the steering shaft.
3. Torque the locknut to 27 N·m (20 ft-lb).
4. Use 2 screws and 2 springs to secure the wheel clip to the wheel cover.
5. Use 3 screws to secure the wheel cover to the steering wheel.
6. Torque the 5 screws to 0.6 N·m (5 in-lb).

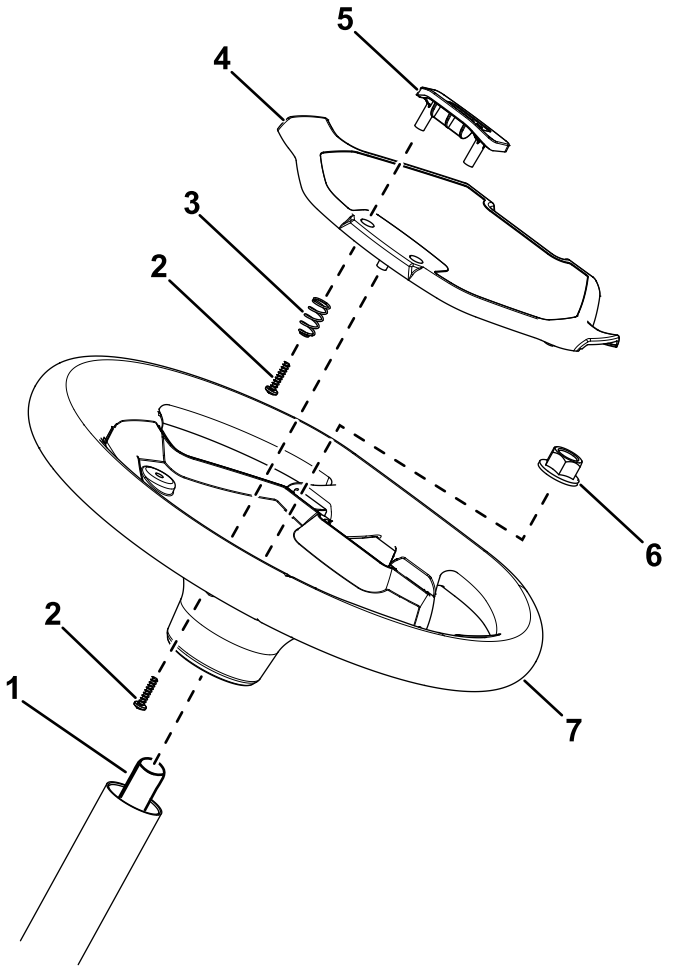

Figure 3

1. Steering shaft
2. Screw
3. Spring
4. Wheel cover
5. Wheel clip
6. Locknut
7. Steering wheel

2

Charging the Machine

No Parts Required

Procedure

Charge the machine; refer to Understanding the Lithium-Ion Battery Charger (page 26).

3

Checking the Fluid Levels and Tire Pressure

No Parts Required

Procedure

1. Check the brake-fluid level before you first start the machine; refer to Checking the Brake-Fluid Level (page 41).
2. Check the transaxle-fluid level before you first start the machine; refer to Checking the Transaxle-Fluid Level (page 39).
3. Check the air pressure in the tires; refer to Checking the Tire Pressure (page 18).

4

Burnishing the Brakes

No Parts Required

Procedure

To ensure optimum performance of the brake system, burnish (break-in) the brakes before use.

1. Bring the machine up to full speed, apply the brakes to rapidly stop the machine without locking up the tires.
2. Repeat this procedure 10 times, waiting 1 minute between stops, to avoid overheating the brakes.

Product Overview

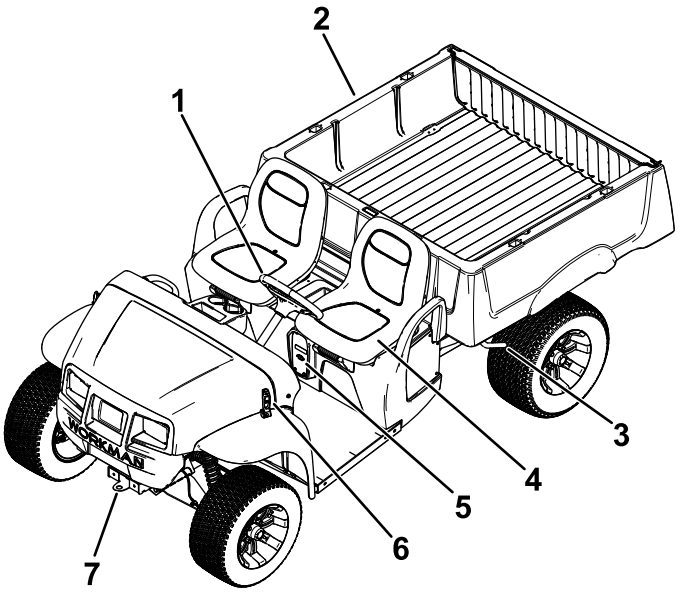

Figure 4

1. Steering wheel
2. Cargo bed
3. Hood latch
4. Cargo-bed lever
5. Operator's seat
6. Charging port
7. Towing tongue

Controls

Control Panel

Note: The steering wheel is removed from Figure 5 for clarity.

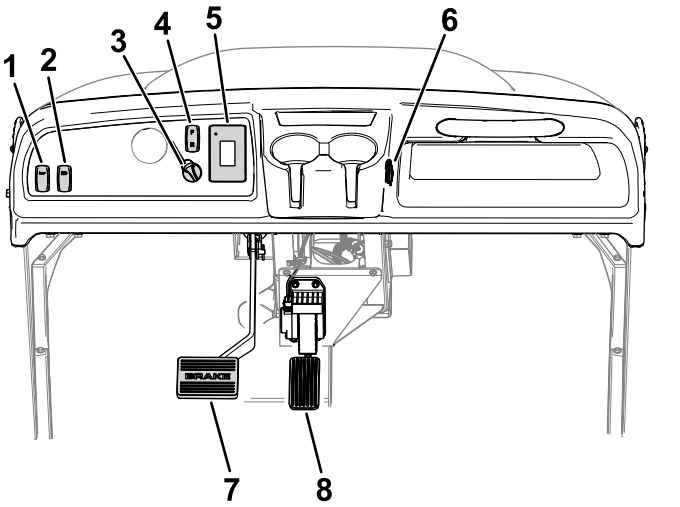

Figure 5

1. Horn switch
2. Light switch
3. Key switch
4. Direction selector
5. Display
6. USB port
7. Brake pedal
8. Accelerator pedal

Accelerator Pedal

Use the accelerator pedal to vary ground speed of the machine. Pressing down the accelerator pedal starts the machine. Pressing the pedal farther increases ground speed. Releasing the pedal slows the machine, and the machine shuts off.

The forward speed in performance mode is 26 km/h (16 mph).

The forward speed in economy mode is 18 km/h (11 mph).

Brake Pedal

Use the brake pedal to stop or slow the machine.

⚠ WARNING

Operating a machine with worn or incorrectly adjusted brakes can result in personal injury.

If the brake pedal travels within 25 mm (1 inch) of the machine floor board, adjust or repair the brakes.

Direction Selector

The direction selector (Figure 5) has 2 positions: FORWARD and REVERSE.

Note: The machine can be on in any of the 2 positions, but only moves in the FORWARD and REVERSE positions.

Horn Switch

Press the horn switch (Figure 5) to sound the horn.

Light Switch

Use the light switch (Figure 5) to illuminate the headlights. Push the light switch up to turn on the headlights. Push the light switch down to turn off the lights.

USB Port

Use the USB port (Figure 5) to power mobile devices.

Important: **When you are not using the USB port, insert the rubber plug to prevent damage to the port.**

Key Switch

Use the key switch (Figure 5) to run and shut off the machine or put the machine into TRANSPORT mode.

The key switch has 3 positions: ON, OFF, and TRANSPORT.

Rotate the key clockwise to the ON position to operate the machine.

When you stop the machine, rotate the key counterclockwise to the OFF position to shut off the machine. Remove the key whenever you leave the machine.

To disengage the parking brake, rotate and hold the key switch in place for 5 seconds to enter the TRANSPORT position.

Display

The display shows information about your machine, such as the operating status, various diagnostics, and other information about the machine (Figure 6).

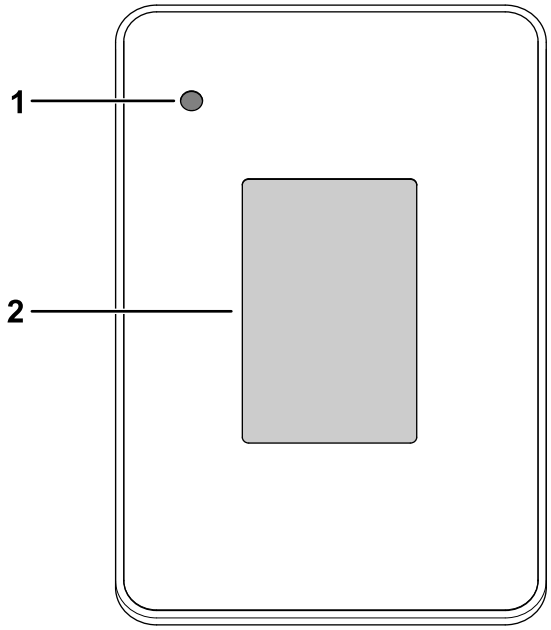

g320256

Figure 6

1. Indicator light
2. Display

There is a startup screen, run screen, and charging screen on the display (Figure 7, Figure 8, and Figure 9).

Figure 8 shows what you may see on the display when you run the machine. The startup screen displays for a few seconds after you turn the key to the ON position, then the run screen displays.

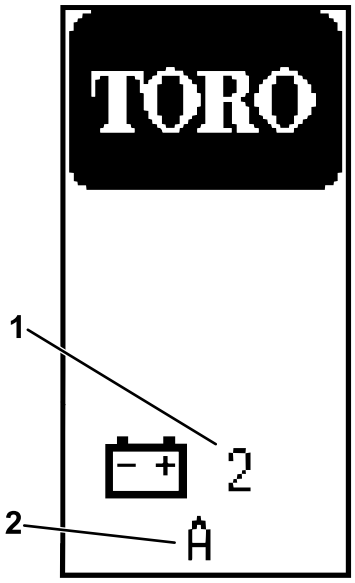

g439782

Figure 7

Startup screen

1. Software revision
2. Number of equipped batteries on the machine

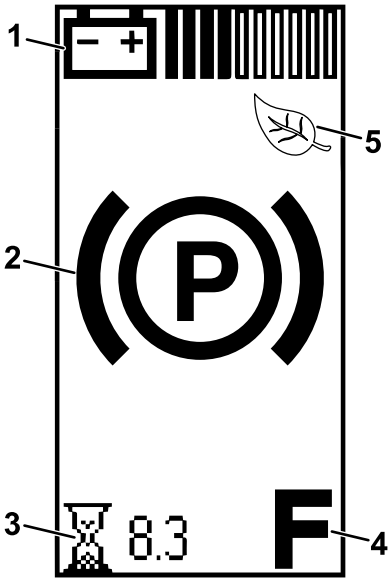

g439795

Figure 8

Run screen

1. Battery charge
2. Parking brake is engaged.
3. Hours operated
4. Direction
5. Eco mode

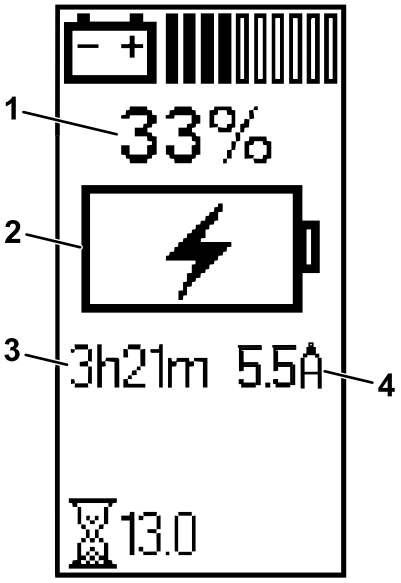

g413589

Figure 9

Charging screen

1. Battery life
2. Battery currently charging indicator
3. Estimated time to fully charge the machine
4. Charging current (Amps)

The run screen with the direction position (Figure 10) appears when you change directions.

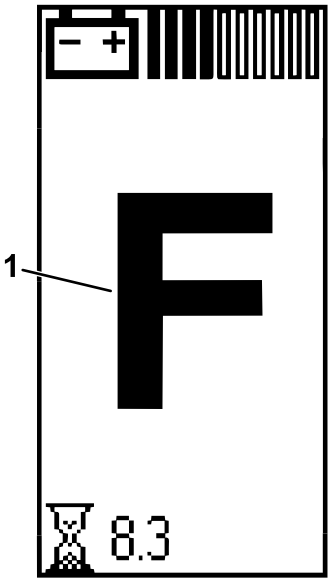

g415318

Figure 10

1. FORWARD position

The run screen with the current machine speed (Figure 11) appears when you are driving the machine.

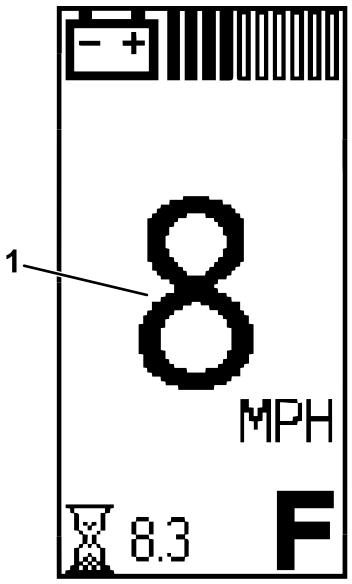

g415320

Figure 11

1. Current machine speed

An active fault code (Figure 12) appears on the display if there is an issue with the machine.

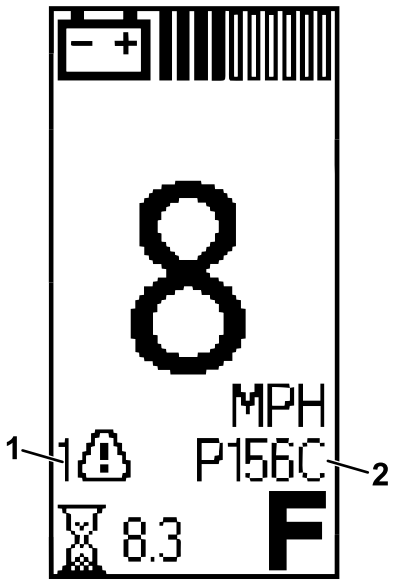

g415319

Figure 12

1. Active fault indicator
2. Fault code

When the cold battery indicator (Figure 13) flashes on the run screen during operation, the machine performance changes until the battery temperature is above 0°C (32°F).

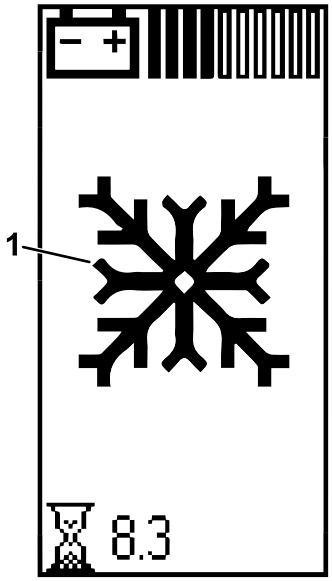

Figure 13

1. Cold battery indicator

The cold battery indicator also appears in the charging screen (Figure 14) when the batteries are too cold to be charged.

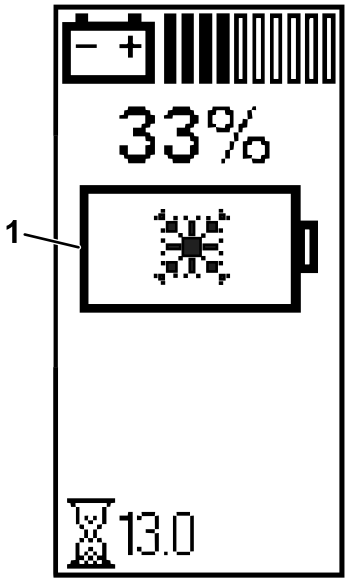

Figure 14

1. Cold battery indicator

Icon Descriptions

F	Direction—FORWARD position
N	Transport—NEUTRAL position
R	Direction—REVERSE position
(P)	Parking brake is engaged.
	Hour meter
	Battery voltage
	Battery charge level
	Battery currently charging
	Low-battery advisory
	Eco Mode is on.
	Active fault
	Hot battery indicator—battery temperature is greater than 67°C (152°F)
	Cold battery indicator—battery temperature is less than 0°C (32°F)
	Batteries are too cold to be charged.

Supervisor Speed-Limit Switch

The supervisor speed-limit switch (Figure 15), located under the hood, has 2 positions: PERFORMANCE and ECONOMY. Rotate the switch clockwise to the ECONOMY position to limit the maximum machine speed to 18 km/h (11 mph). Rotate the switch counterclockwise to the PERFORMANCE position to restore the maximum speed of the machine to 26 km/h (16 mph).

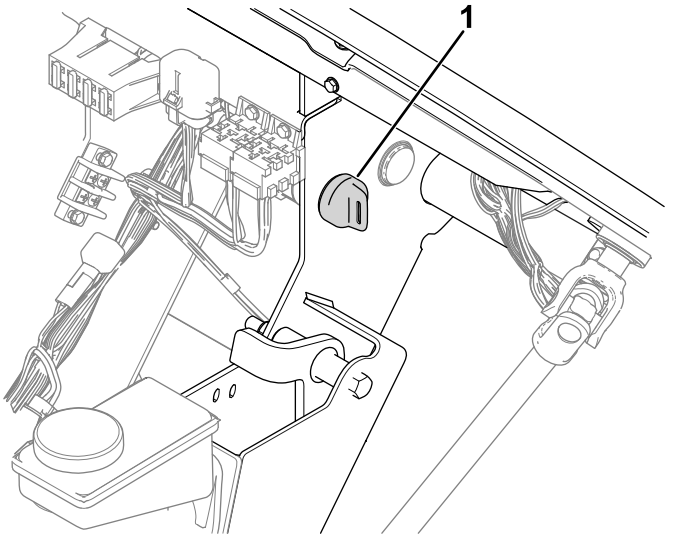

Figure 15

1. Supervisor speed-limit switch

Passenger Handholds

The passenger handholds are located on the right side of the dash panel and at the outside of each seat (Figure 16).

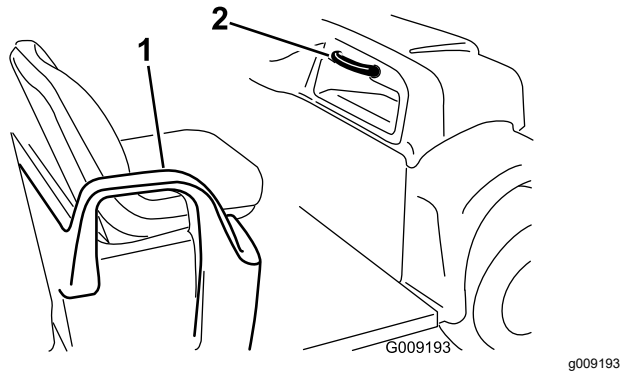

Figure 16

1. Handhold—hip restraint
2. Passenger handhold

Specifications

Note: Specifications and design are subject to change without notice.

Base weight	Dry 571 kg (1,260 lb)
Rated capacity (on level ground)	767 kg (1,690 lb) total, including 90.7 kg (200 lb) operator and 90.7 kg (200 lb) passenger, load, trailer tongue weight, gross trailer weight, accessories, and attachments
Gross vehicle weight (GVW)—on level ground	1,338 kg (2,950 lb) total, including all of the weights listed above
Maximum cargo capacity (on level ground)	567 kg (1,250 lb) total, including trailer tongue weight and gross trailer weight
Towing capacity: Standard hitch Heavy-duty hitch	 Tongue weight: 45 kg (100 lb) Gross trailer weight (GTW): 363 kg (800 lb) Tongue weight: 45 kg (100 lb) Gross trailer weight (GTW): 544 kg (1,200 lb)
Overall width	155 cm (61 inches)
Overall length	307 cm (121 inches)
Ground clearance	28 cm (11 inches) at the front with no load or operator, 17 cm (6.5 inches) at the rear with no load or operator
Wheel base	206 cm (81 inches)
Wheel tread (center line to center line)	125 cm (49 inches) in the front, 120 cm (47-1/4 inches) in the rear
Cargo bed length	113 cm (44.5 inches), 137 cm (54 inches) outside
Cargo bed width	125 cm (49 inches) inside, 155 cm (61 inches) at outside of the molded fenders
Cargo bed height	25 cm (10 inches) inside

Attachments/Accessories

A selection of Toro approved attachments and accessories is available for use with the machine to enhance and expand its capabilities. Contact your Authorized Service Dealer or authorized Toro distributor or go to www.Toro.com for a list of all approved attachments and accessories.

To ensure optimum performance and continued safety certification of the machine, use only genuine Toro replacement parts and accessories. Replacement parts and accessories made by other manufacturers could be dangerous, and such use could void the product warranty.

Operation

Before Operation

Before Operation Safety

General Safety

- Never allow children or people who are not trained or physically capable to safely operate or service the machine. Local regulations may restrict the age of the operator. The owner is responsible for training all operators and mechanics.
- Become familiar with the safe operation of the equipment, operator controls, and safety signs.
- Shut off the machine, remove the key, and wait for all movement to stop before you leave the operator's position. Allow the machine to cool before adjusting, servicing, cleaning, or storing it.
- Know how to stop and shut off the machine quickly.
- Ensure that there are not more occupants (you and your passenger(s)) than the number of handholds equipped on the machine.
- Check that all safety devices and decals are in place. Repair or replace all safety devices and replace all illegible or missing decals. Do not operate the machine unless they are present and functioning properly.

Performing Daily Maintenance

Service Interval: Before each use or daily

Before starting the machine each day, perform the Each Use/Daily procedures listed in Maintenance (page 28).

Checking the Tire Pressure

Service Interval: Before each use or daily

Tire air pressure specification: 55 to 103 kPa (8 to 22 psi)

Important: **Do not exceed the maximum air pressure indicated on the sidewall of the tire.**

Note: The air pressure needed in the tires is determined by the payload that you intend to carry.

1. Check the air pressure in the tires.

   Note: The air pressure in the front and rear tires should be between 55 to 103 kPa (8 to 22 psi).

   - Use lower air pressure in the tires for lighter payloads, for less soil compaction, for a smoother ride, and to minimize tire marks on the ground.
   - Use higher air pressure in the tires for carrying heavier payloads at higher speeds.

2. If necessary, adjust the air pressure in the tires by adding or removing air in the tires.

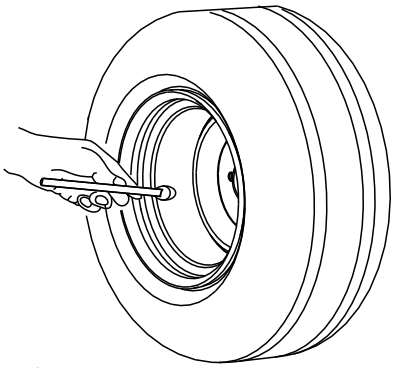

Figure 17

Breaking in a New Machine

Service Interval: After the first 100 hours—Perform the breaking in a new machine guidelines.

Perform the breaking in a new machine guidelines to provide proper performance and long life for the machine.

- Ensure that the brakes are burnished; refer to the burnishing section in Setup.
- Check the brake fluid; refer to Checking the Brake-Fluid Level (page 41).
- Refer to Maintenance (page 28) for any special low hour checks.
- Check the front and rear suspension positioning and adjust it, if necessary; refer to Adjusting the Front Wheel Alignment (page 38).
- For optimal battery performance and battery life, charge the batteries to 100% when you receive your machine.

During Operation

During Operation Safety

General Safety

- The owner/operator can prevent and is responsible for accidents that may cause personal injury or property damage.
- Passengers should sit in the designated seating positions only. Do not carry passengers in the

cargo bed. Keep bystanders and pets away from the machine during operation.

- Wear appropriate clothing, including eye protection; long pants; and substantial, slip-resistant footwear. Tie back long hair and do not wear loose clothing or loose jewelry.
- Use your full attention while operating the machine. Do not engage in any activity that causes distractions; otherwise, injury or property damage may occur.
- Do not operate the machine while ill, tired, or under the influence of alcohol or drugs.
- Do not exceed the maximum gross vehicle weight (GVW) of the machine.
- Use extra caution when operating, braking, or turning the machine with a heavy load in the cargo bed.
- Carrying oversized loads in the cargo bed reduces the stability of the machine. Do not exceed the carrying capacity of the bed.
- Carrying material that cannot be bound to the machine adversely affects the steering, braking, and stability of the machine. When you carry material that cannot be bound to the machine, use caution when steering or braking.
- Carry a reduced load and reduce the ground speed of the machine when operating on rough, uneven terrain, and near curbs, holes, and other sudden changes in terrain. Loads may shift, causing the machine to become unstable.
- Before you start the machine, ensure that the parking brake is engaged and you are in the operating position.
- You and your passengers should remain seated whenever the machine is moving. Keep your hands on the steering wheel; your passengers should use the handholds provided. Keep arms and legs within the machine body at all times.
- Operate the machine only in good visibility. Watch for holes, ruts, bumps, rocks, or other hidden objects. Uneven terrain could overturn the machine. Tall grass can hide obstacles. Use care when approaching blind corners, shrubs, trees, or other objects that may obscure your vision.
- Do not drive the machine near drop-offs, ditches, or embankments. The machine could suddenly roll over if a wheel goes over the edge or if the edge gives way.
- Always watch out for and avoid low overhangs such as tree limbs, door jambs, overhead walkways, etc.
- Look behind and down before reversing the machine to be sure of a clear path.
- When using the machine on public roads, follow all traffic regulations and use any additional accessories that may be required by law, such as lights, turn signals, slow-moving vehicle (SMV) signs, and others as required.
- If the machine ever vibrates abnormally, stop and shut off the machine immediately, wait for all movement to stop, and inspect for damage. Repair all damage to the machine before resuming operation.
- It can take longer to stop the machine on wet surfaces than on dry surfaces. To dry out wet brakes, drive slowly on level ground while putting light pressure on the brake pedal.
- Operating the machine at high speed and then quickly stopping may cause the rear wheels to lock up, which impairs your control of the machine.
- Do not touch the motor while the motor is running, or soon after you turn off the motor, because these areas may be hot enough to cause burns.
- Do not leave a running machine unattended.
- Before you leave the operating position, do the following:
  - Park the machine on a level surface.
  - Ensure that the parking brake is engaged.
  - Shut off the machine and remove the key.
  - Wait for all movement to stop.
- Do not operate the machine when there is the risk of lightning.
- Use accessories and attachments approved by The Toro Company only.

Slope Safety

Note: A 2-post Rollover Protection System (ROPS) is available for this machine as an accessory. Use a ROPS if you will work next to drop-offs, near water, in rough terrain, or on a slope, which could result in a rollover. Contact an authorized Toro distributor for more information.

Slopes are a major factor related to loss-of-control and tip-over accidents, which can result in severe injury or death.

- Survey the site to determine which slopes are safe for operating the machine and establish your own procedures and rules for operating on those slopes. Always use common sense and good judgment when performing this survey.
- If you feel uneasy operating the machine on a slope, do not do it.
- Keep all movement on slopes slow and gradual. Do not suddenly change the speed or direction of the machine.

- Avoid operating the machine on wet terrain. Tires may lose traction. A rollover can occur before the tires lose traction.
- Travel straight up and down a slope.
- If you begin to lose momentum while climbing a slope, gradually engage the brakes and slowly reverse the machine straight down the slope.
- Turning while going up or down a slope can be dangerous. If you must turn on a slope, do it slowly and cautiously.
- Heavy loads affect stability on a slope. Carry a reduced load and reduce your ground speed when operating on a slope or if the load has a high center of gravity. Secure the load to the cargo bed of the machine to prevent the load from shifting. Take extra care when hauling loads that shift easily (e.g., liquids, rock, sand, etc.).
- Avoid starting, stopping, or turning the machine on a slope, especially with a load. Stopping while going down a slope takes longer than stopping on level ground. If you must stop the machine, avoid sudden speed changes, which can cause the machine to tip or roll over. Do not engage the brakes suddenly when rolling rearward, as this may cause the machine to overturn.

Loading and Dumping Safety

- Do not exceed the gross vehicle weight (GVW) of the machine when operating it with a load in the cargo bed and/or towing a trailer; refer to Specifications (page 17).
- Distribute the load in the cargo bed evenly to improve the stability and control of the machine.
- Before dumping, ensure that there is no one behind the machine.
- Do not dump a loaded cargo bed while the machine is sideways on a slope. The change in weight distribution may cause the machine to overturn.

Operating the Cargo Bed

Raising the Cargo Bed

⚠ WARNING

A raised bed could fall and injure persons that are working beneath it.

- **Always use the prop rod to hold the bed up before working under the bed.**
- **Remove any load material from the bed before raising it.**

⚠ WARNING

Driving the machine with the cargo bed raised could cause the machine to tip or roll easier. You could damage the structure of the cargo bed if you operate the machine with the bed raised.

- **Operate the machine when the cargo bed is down.**
- **After emptying the cargo bed, lower it.**

⚠ CAUTION

If a load is concentrated near the back of the cargo bed when you release the latches, the bed may unexpectedly tip open, injuring you or bystanders.

- **Center loads in the cargo bed, if possible.**
- **Hold the cargo bed down and ensure that no one is leaning over the bed or standing behind it when releasing the latches.**
- **Remove all cargo from the bed before lifting the bed up to service the machine.**

1. Lift the lever on either side of the bed and lift the bed up (Figure 18).

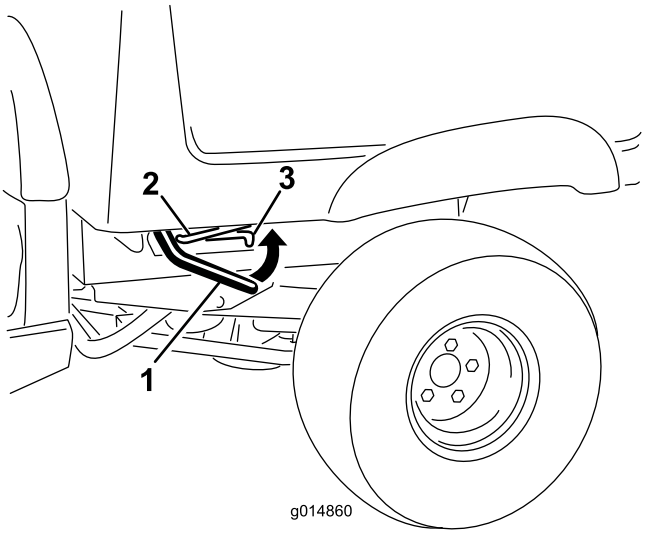

g014860

Figure 18

1. Lever
2. Prop rod
3. Detent slot

2. Pull the prop rod into the detent slot to secure the bed (Figure 19).

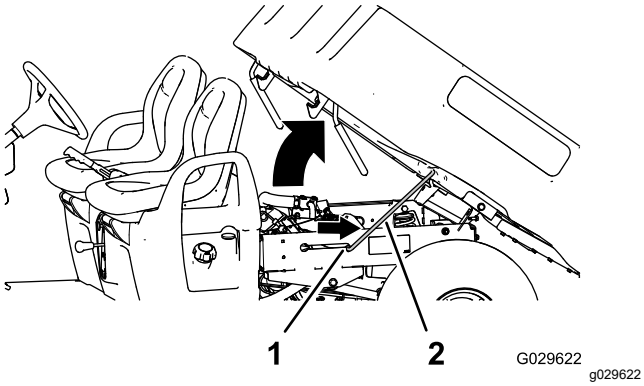

Figure 19

1. Detent slot
2. Prop rod

Lowering the Cargo Bed

⚠ WARNING

The weight of the bed may be heavy. Hands or other body parts could be crushed.

Keep your hands and other body parts clear when lowering the bed.

1. Raise the cargo bed slightly by lifting up the latch lever (Figure 18).
2. Pull the prop rod out of the detent slot (Figure 19).
3. Lower the bed until it latches securely into place (Figure 19).

Opening the Tailgate

1. Ensure that the cargo bed is down and latched.
2. Lift up the finger pulls at the back panel of the tailgate (Figure 20).

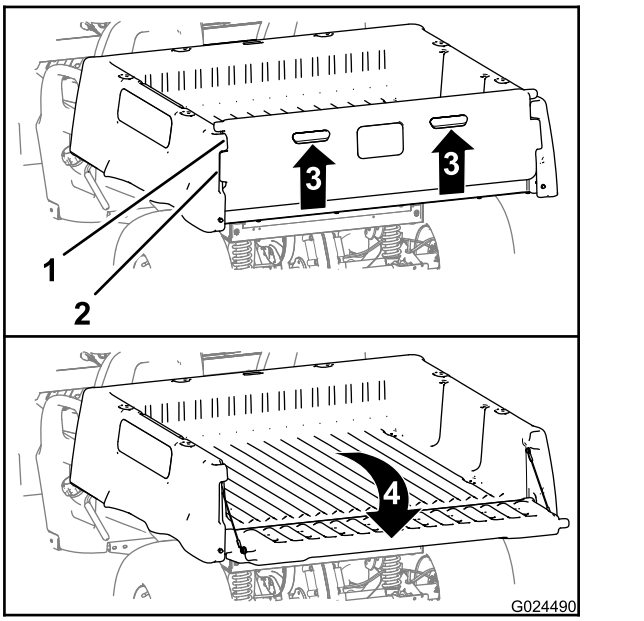

Figure 20

1. Tailgate flange (cargo bed)
2. Lock flange (tailgate)
3. Lift up (finger pull)
4. Rotate rearward and down

3. Align the lock flanges of the tailgate with the openings between the tailgate flanges of the cargo bed (Figure 20).
4. Rotate the tailgate rearward and down (Figure 20).

Closing the Tailgate

If you unloaded loose material such as sand, landscaping rock, or wood chips from the cargo bed of the machine, some of the material that you unloaded may have lodged in the hinge area of the tailgate. Perform the following before closing the tailgate.

1. Use your hands to remove as much of the material from the hinge area as possible.
2. Rotate the tailgate to approximately the 45° position (Figure 21).

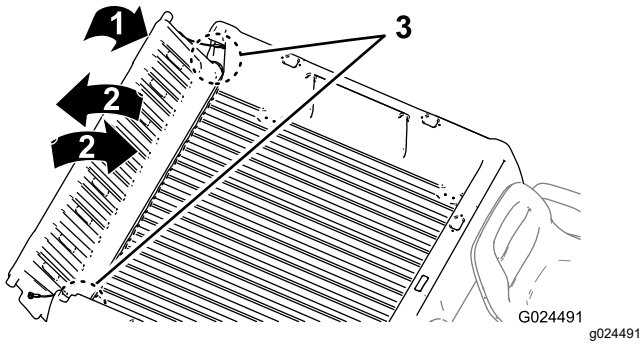

Figure 21

1. Rotate the tailgate to approximately the 45° position.
2. Rotate the tailgate back and forth several times.
3. Hinge area

3. Use a short, shaking motion to rotate the tailgate back and forth several times (Figure 21).

   Note: This action helps move material away from the hinge area.

4. Lower the tailgate and check for material remaining in the hinge area.
5. Repeat steps 1 through 4 until the material is removed from the hinge area.
6. Rotate the tailgate up and forward until the lock flanges of the tailgate are flush with the tailgate pocket in the cargo bed (Figure 20).

   Note: Raise or lower the tailgate in order to align the lock flanges of the tailgate with the vertical openings between the tailgate flanges of the cargo bed.

7. Lower the tailgate until it is seated in the back of the cargo bed (Figure 20).

   Note: The lock flanges of the tailgate are fully secured by the tailgate flanges of the cargo bed.

Monitoring the Battery-System Charge Level

Refer to the display to determine the battery-system charge level; refer to Display (page 13).

Understanding the Low Battery-Level Advisories

If the battery level becomes too low (i.e., below 10%), a low-battery icon appears on the display. When you are operating at this battery percentage, drive the machine to a designated battery-charging area and charge the batteries; refer to Understanding the Lithium-Ion Battery Charger (page 26).

If you operate the machine while the battery charge level is blank, the machines operates at a reduced speed (i.e., 5 km/h or 3 mph).

Stopping the Machine

Important: **When stopping the machine on an incline, use the service brakes to stop the machine to hold the machine in place. Using the accelerator to stall the machine on the hill can overheat the motor or drain the batteries.**

1. Remove your foot from the accelerator pedal.
2. Slowly press the brake pedal to apply the service brakes until the machine comes to a complete stop. The parking brake engages when the machine comes to a complete stop.

   Note: The stopping distance may vary depending on the machine load and speed.

Loading the Cargo Bed

Use the following guidelines when loading the cargo bed and operating the machine:

- Observe the weight capacity of the machine and limit the weight of the load that you carry in the cargo bed as described in Specifications (page 17) and on the gross vehicle weight tag of the machine.

  Note: The load rating is specified for machine operation on a level surface only.

- Reduce the weight of the load that you carry in the cargo bed when operating the machine on hills and rough terrain.
- Reduce the weight of the load that you carry when the materials are tall (and have a high center of gravity), such as a stack of bricks, landscaping timbers, or fertilizer bags. Distribute the load as low as possible to ensure that the load does not reduce your ability to see behind the machine when operating it.
- Keep loads centered by loading the cargo bed as follows:
  - Evenly position the weight in the cargo bed from side to side.

    Important: **Tipping over is more likely to occur if the cargo bed is loaded to 1 side.**

  - Evenly position the weight in the cargo bed from front to back.

    Important: **Loss of steering control or the machine may tip over if you position the load behind the rear axle and the traction on the front tires is reduced.**

- Use extra caution when transporting oversized loads in the cargo bed, particularly when you cannot center the weight of the oversize load to the cargo bed.
- Whenever possible, secure the load by binding it to the cargo bed so that it does not shift.
- When transporting liquids, use caution when driving the machine uphill or downhill, when suddenly changing speed or stopping, or when driving over rough surfaces.

The capacity of the cargo box is 0.37 m^3 (13 ft^3). The amount (volume) of material that you can place in the bed without exceeding the load ratings of the machine can vary greatly depending on the density of the material.

Refer to the following table for load volume limits with various materials:

Material	Density	Maximum Cargo Box Capacity (on level ground)
Gravel, dry	1522 kg/m^3 (95 lb/ft^3)	Full
Gravel, wet	1922 kg/m^3 (120 lb/ft^3)	3/4 Full
Sand, dry	1442 kg/m^3 (90 lb/ft^3)	Full
Sand, wet	1922 kg/m^3 (120 lb/ft^3)	3/4 Full
Wood	721 kg/m^3 (45 lb/ft^3)	Full
Bark	<721 kg/m^3 (<45 lb/ft^3)	Full
Earth, packed	1602 kg/m^3 (100 lb/ft^3)	3/4 Full (approximately)

After Operation

After Operation Safety

General Safety

- Before you leave the operating position, do the following:
  - Park the machine on a level surface.
  - Ensure that the parking brake is engaged.
  - Shut off the machine and remove the key.
  - Wait for all movement to stop.
- Allow the machine to cool before adjusting, servicing, cleaning, or storing it.
- Do not store the machine where there is an open flame, spark, or pilot light, such as on a water heater or other appliance.
- Keep all parts of the machine in good working condition and all hardware tightened.
- Maintain and clean the seat belt(s) as necessary.
- Replace all worn, damaged, or missing decals.

Battery and Charger Safety

General

WARNING: Risk of fire and electric shock—The batteries have no user-serviceable parts.

- Confirm the voltage that is available in your country before using the charger.
- Do not charge the machine in a wet environment; keep it protected from rain and snow.
- A risk of fire, electric shock, or injury may result from using an accessory not recommended or sold by Toro.
- To reduce risk of a battery explosion, follow these instructions and the instructions for any equipment that you intend to use near the charger.
- Batteries could emit explosive gasses if they are significantly overcharged.
- Refer to an authorized Toro distributor to service or replace a battery.

Training

- Never allow children or untrained people to operate or service the charger. Local regulations may restrict the age of the operator. The owner is responsible for training all operators and mechanics.
- Read, understand, and follow all instructions on the charger and in the manual before operating the charger. Be familiar with the proper use of the charger.

Preparation

- Keep bystanders and children away while charging.
- Shut off the machine and wait until the machine has completely powered down before charging. Failure to do this may cause arcing.
- Use the charger only within the voltage range specified in this *Operator's Manual*, and use only a power cord approved by Toro.
- Contact your authorized Toro distributor for the proper charger and power cord.

Operation

- Do not charge a frozen battery.
- Do not abuse the cord. Do not pull on the power supply cord to disconnect the charger from the receptacle. Store the cord away from heat, oil, and sharp edges.
- Connect the charger directly to a grounding receptacle. Do not use the charger on an ungrounded outlet, even with a grounding adapter.
- Do not alter the provided power cord or plug.
- Remove metal items such as rings, bracelets, necklaces, and watches when working with a lithium-ion battery. A lithium-ion battery can produce enough current to cause a severe burn.
- Use an extension cord that can handle the charging amperage specified in this *Operator's Manual*. If you are charging outdoors, use an extension cord rated for outdoor use.
- If the power supply cord is damaged while it is plugged in, disconnect the cord from the wall receptacle and contact an authorized Toro distributor for a replacement.
- Unplug the charger from the electrical outlet when not in use, before moving it to another location, or prior to servicing it.

Maintenance and Storage

- Do not disassemble the charger.
- Take the charger to an authorized Toro distributor when service or repair is required.
- Unplug the power cord from the outlet before starting any maintenance or cleaning to reduce risk of electric shock.
- Maintain or replace safety and instruction labels as needed.
- Do not operate the charger with a damaged cord or plug. Contact an authorized Toro distributor to obtain a replacement cord.
- If the charger is damaged, do not use it; take it to an authorized Toro distributor.

Hauling the Machine

- Use care when loading or unloading the machine into a trailer or a truck.
- Use full-width ramps for loading the machine into a trailer or a truck.
- Tie the machine down securely.

Refer to Figure 22 and Figure 23 for the tie-down locations on the machine.

Note: Load the machine on the trailer with the front of the machine facing forward. If that is not possible, secure the machine hood to the frame with a strap, or remove the hood and transport and secure it separately or the hood may blow off during transport.

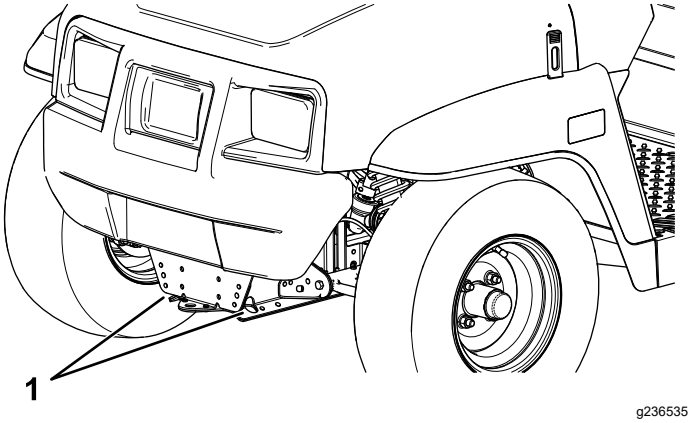

Figure 22

1. Towing tongue and tie-down point (front of the machine)

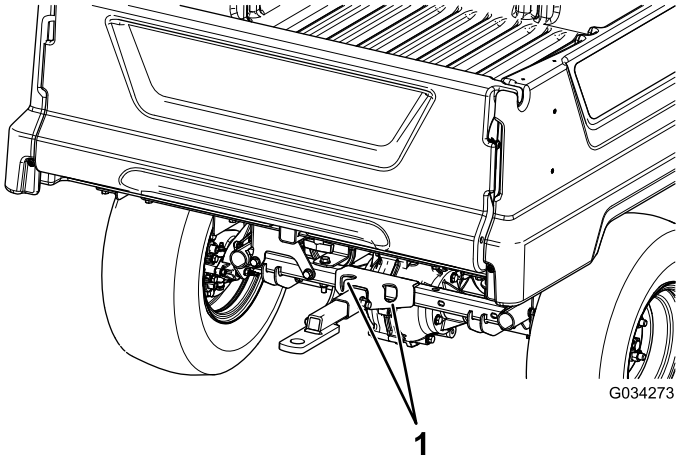

Figure 23

1. Rear tie-down points

Towing the Machine

In case of an emergency, you can tow the machine for a short distance; however, this should not be a standard operating procedure.

⚠ WARNING

Towing at excessive speeds could cause a loss of steering control, resulting in personal injury.

Never tow the machine at faster than 8 km/h (5 mph).

Towing the machine is a 2-person job. If you must move the machine a considerable distance, transport it on a truck or trailer.

1. Affix a tow line to the tongue at the front of the machine's frame.
2. To disengage the parking brake, rotate and hold the key switch in place for 5 seconds to enter the TRANSPORT position.

   Note: The "N" symbol (i.e., the NEUTRAL position) should appear on the display.

Towing a Trailer

The machine is capable of pulling trailers. A tow hitch is available for the machine. Contact your Authorized Service Dealer for details.

When hauling cargo or towing a trailer, do not overload your machine or trailer. Overloading either the machine or the trailer can cause poor performance or damage to the brakes, transaxle, steering, suspension, body structure, or tires.

Always load a trailer with 60% of the cargo weight in the front of the trailer. This places approximately 10% of the gross trailer weight (GTW) on the tow hitch of the machine.

To provide adequate braking and traction, always load the cargo bed when using a trailer. Do not exceed the GTW or GVW limits.

Avoid parking a machine with a trailer on a hill. If you must park on a hill, chock the tires of the trailer.

Transporting the Lithium-Ion Batteries

The US Department of Transportation and international transportation authorities require that lithium-ion batteries be transported using special packaging and only be transported by carriers certified to haul them. In the US, you are allowed to transport a battery when it is installed on the machine as battery powered equipment, with some regulatory requirements. Contact the US Department of Transportation or the appropriate government body in your country for detailed regulations on transportation of your batteries or the machine with the batteries equipped.

For detailed information on shipping a battery, contact your authorized Toro distributor.

Understanding the Lithium-Ion Battery Charger

Connecting to a Power Source

⚠ DANGER

Contact with water while charging the machine could cause electric shock, causing injury or death.

- **Do not handle the plug or the charger with wet hands or while standing in water.**
- **Do not charge the batteries in the rain or in wet conditions.**

To reduce the risk of electric shock, this charger has a 3-prong grounded plug (type B). If the plug does not fit into the wall receptacle, other grounded plug types are available; contact an authorized Toro distributor.

Do not change the charger or the power-supply-cord plug in any way.

Important: **Check the power supply cord periodically for holes or cracks in the insulation. Do not use a damaged cord. Do not run the cord through standing water or wet grass.**

See Figure 24 for power source requirements.

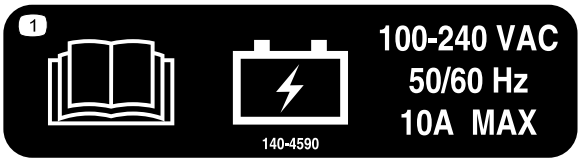

decal140-4590

Figure 24

1. Plug the power-supply cord into the machine charger outlet (Figure 25).

⚠ WARNING

A damaged charger cord can cause an electrical shock or a fire.

Thoroughly inspect the power supply cord before using the charger. If the cord is damaged, do not operate the charger until you obtain a replacement.

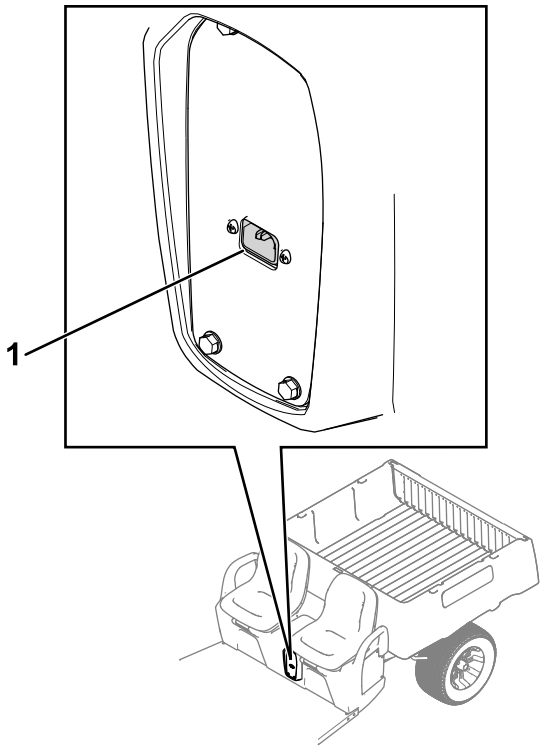

g424404

Figure 25

1. Charger outlet

2. Insert the wall plug end of the power-supply cord into a grounded electrical outlet.

Charging the Lithium-Ion Batteries

⚠ CAUTION

Attempting to charge the batteries with a charger not provided by Toro can result in excessive heat and other related product malfunctions, which can lead to property damage and/or injury.

Use the Toro-provided chargers to charge the batteries.

Recommended temperature range for charging:
0° to 45°C (32° to 113°F)

Important: **Charge the batteries only in temperatures that are within the recommended range.**

Note: The charger will not function in temperatures exceeding the minimum or maximum temperatures. The hot or cold battery indicators will appear on the display.

The charging status is shown on the display.

If there is a fault, an error message will appear in the display. To correct an error, refer to the machine *Service Manual*.

Completing the Charging Process

1. Remove the power-supply cord from the machine charger outlet.
2. Place the cord in a storage position that avoids damage.
3. Turn on the machine.
4. Verify the charge level; refer to Display (page 13).

Maintenance

Maintenance Safety

- Do not allow untrained personnel to service the machine.
- Before you leave the operating position, do the following:
  - Park the machine on a level surface.
  - Ensure that the parking brake is engaged.
  - Shut off the machine and remove the key.
  - Wait for all movement to stop.
- Allow the machine to cool before adjusting, servicing, cleaning, or storing it.
- Support the machine with jack stands whenever you work under the machine.
- Do not work under a raised bed without the proper bed safety support in place.
- Do not charge the batteries while servicing the machine.
- To ensure that the entire machine is in good condition, keep all hardware properly tightened.
- To reduce the potential fire hazard, keep the machine area free of excessive grease, grass, leaves, and accumulation of dirt.
- If possible, do not perform maintenance while the machine is running. Keep away from moving parts.
- If you must run the machine to perform a maintenance adjustment, keep your hands, feet, clothing, and any parts of the body away from any moving parts. Keep bystanders away from the machine.
- Check the parking brake operation as recommended in the maintenance schedule and adjust and service it as required.
- Keep all parts of the machine in good working condition and all the hardware properly tightened. Replace all worn or damaged decals.
- Never interfere with the intended function of a safety device or reduce the protection provided by a safety device.
- If major repairs are ever necessary or assistance is required, contact an authorized Toro distributor.
- Altering this machine in any manner may affect the operation of the machine, performance, durability, or its use may result in injury or death. Such use could void the product warranty of The Toro® Company.

Recommended Maintenance Schedule(s)

Maintenance Service Interval	Maintenance Procedure
After the first 100 hours	• Perform the breaking in a new machine guidelines.
Before each use or daily	• Inspect the seat belt(s) for wear, cuts, and other damage. Replace the seat belt(s) if any component does not operate properly. • Check the tire pressure. • Check the brake-fluid level. Check the brake-fluid level before you first start the machine. • Wash the machine.
Every 100 hours	• Check the condition of the tires and rims. • Torque the wheel-lug nuts. • Inspect the steering and suspension for loose or damaged components. • Check the front wheel camber and toe-in. • Check the transaxle-fluid level. • Check the transaxle for leaks. • Inspect the brake lines and connections.
Every 200 hours	• Inspect the service and parking brakes.
Every 300 hours	• Grease the front wheel bearings.
Every 400 hours	• Visually inspect the brakes for worn brake shoes.
Every 800 hours	• Change the transaxle fluid.
Every 1,000 hours	• Change the brake fluid.

Note: Download a free copy of the electrical schematic by visiting www.Toro.com and searching for your machine from the Manuals link on the home page.

⚠ WARNING

Failing to properly maintain the machine could result in premature failure of machine systems, causing possible harm to you or bystanders.

Keep the machine well maintained and in good working order as indicated in these instructions.

⚠ CAUTION

Only qualified and authorized personnel should maintain, repair, adjust, or inspect the machine.

- **Avoid fire hazards and have fire-protection equipment present in the work area. Do not use an open flame to check fluid levels.**
- **Do not use open pans of flammable cleaning fluids for cleaning parts.**

⚠ CAUTION

If you leave the key in the switch, someone could accidently start the machine and seriously injure you or other bystanders.

Shut off the machine and remove the key from the switch before you perform any maintenance.

Daily Maintenance Checklist

Duplicate this page for routine use.

Maintenance Check Item	For the week of:						
	Monday	Tuesday	Wednesday	Thursday	Friday	Saturday	Sunday
Check the brake and parking brake operation.							
Check the direction-selector operation.							
Check the brake-fluid level.							
Check for unusual operating noises.							
Check the tire pressure.							
Check for fluid leaks.							
Check the instrument operation.							
Check the accelerator operation.							
Touch up any damaged paint.							
Wash the machine.							
Touch up any damaged paint.							

Maintaining the Machine under Special Operating Conditions

Important: **If the machine is subjected to any of the conditions listed below, perform maintenance twice as frequently:**

- Desert operation
- Cold climate operation—below 10°C (50°F)
- Trailer towing
- Frequent operation in dusty conditions
- Construction work
- After extended operation in mud, sand, water, or similar dirty conditions, do the following:
  - Have your brakes inspected and cleaned as soon as possible. This prevents any abrasive material from causing excessive wear.
  - Wash the machine using water alone or with a mild detergent.

    Important: **Do not use brackish or reclaimed water to clean the machine.**

Pre-Maintenance Procedures

Preparing the Machine for Maintenance

1. Park the machine on a level surface.
2. Ensure that the parking brake is engaged.
3. Shut off the machine and remove the key.

Lifting the Machine

⚠ DANGER

The machine may be unstable when using a jack. The machine could slip off the jack, injuring anyone beneath it.

- **Do not start the machine while the machine is on a jack.**
- **Always remove the key from the key switch before getting off the machine.**
- **Block the tires when the machine is supported by lifting equipment.**
- **Use jack stands to support the machine once you have lifted it.**

Important: **Whenever you run the machine for routine maintenance and/or diagnostics, ensure that the rear wheels of the machine are 25 mm (1 inch) off the ground, with the rear axle supported on jack stands.**

- The lifting point at the front of the machine is located at the front of the frame, behind the towing tongue (Figure 26).

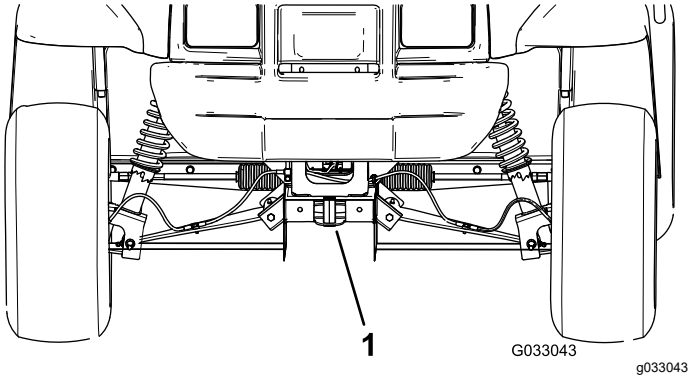

Figure 26

1. Front lifting point

- The lifting point at the rear of the machine is located under the axle tubes (Figure 27).

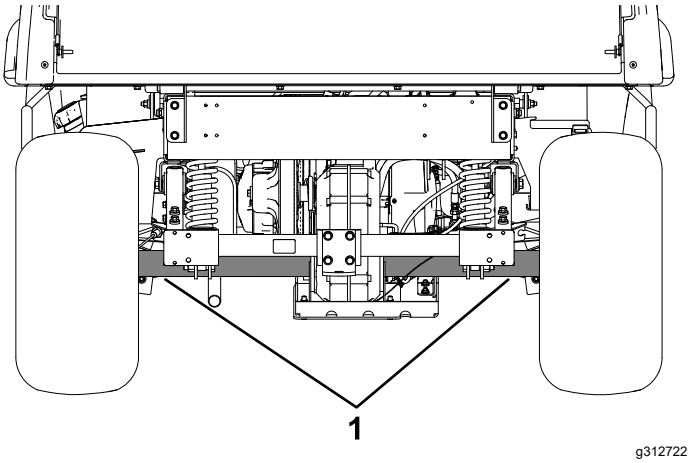

Figure 27

1. Rear lifting points

Accessing the Hood

Raising the Hood

1. Lift up the handle of the rubber latches on each side of the hood (Figure 28).

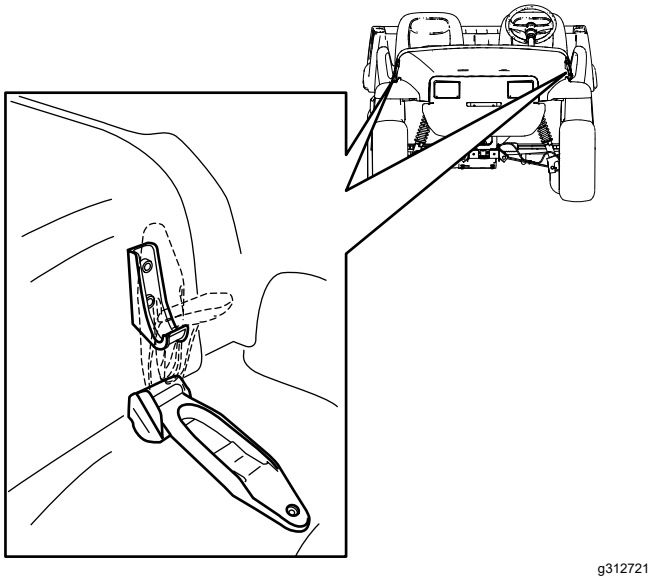

Figure 28

2. Raise the hood.

Closing the Hood

1. Gently lower the hood.
2. Secure the hood by aligning the rubber latches onto the latch anchors on each side of the hood (Figure 28).

Lubrication

Greasing the Front Wheel Bearings

Service Interval: Every 300 hours

Grease specification: Mobilgrease XHP™-222

Removing the Hub and Rotor

1. Lift the front of the machine and support it with jack stands.
2. Remove the 4 lug nuts that secure the wheel to the hub (Figure 29).

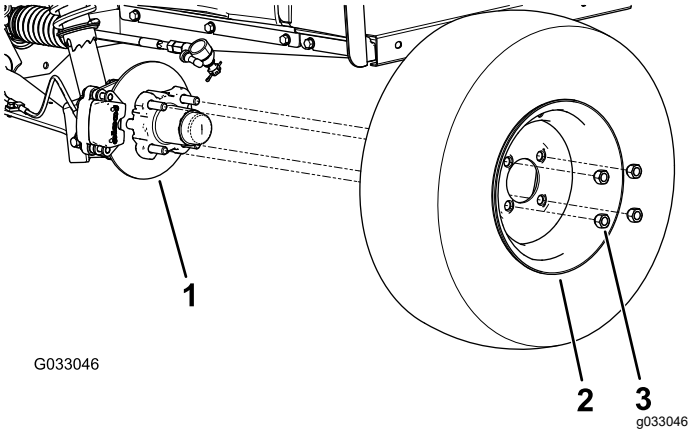

Figure 29

1. Hub
2. Wheel
3. Lug nut

3. Remove the flange-head bolts (3/8 x 3/4 inch) that secure the bracket for the brake assembly to the spindle and separate the brake from the spindle (Figure 30).

   Note: Support the brake assembly before proceeding to the next step.

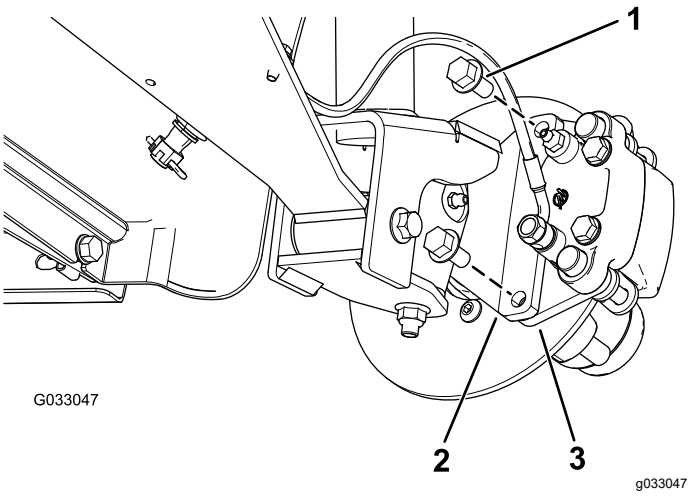

Figure 30

1. Flange-head bolts (3/8 x 3/4 inch)
2. Spindle
3. Caliper bracket (brake assembly)

4. Remove the dust cap from the hub (Figure 31).

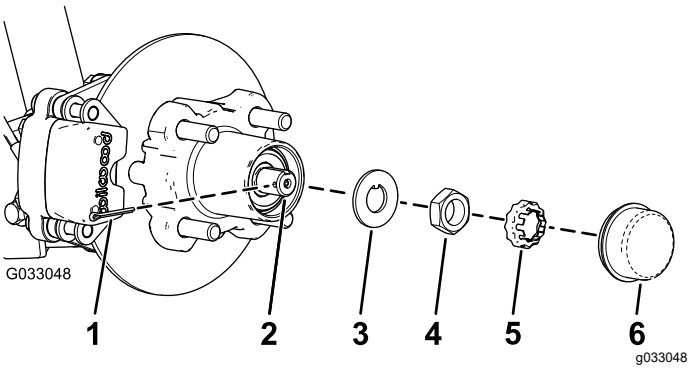

Figure 31

1. Cotter pin
2. Spindle
3. Tab washer
4. Spindle nut
5. Nut retainer
6. Dust cap

5. Remove the cotter pin and nut retainer from the spindle and spindle nut (Figure 31).
6. Remove the spindle nut from the spindle, and separate the hub and rotor assembly from the spindle (Figure 31 and Figure 32).

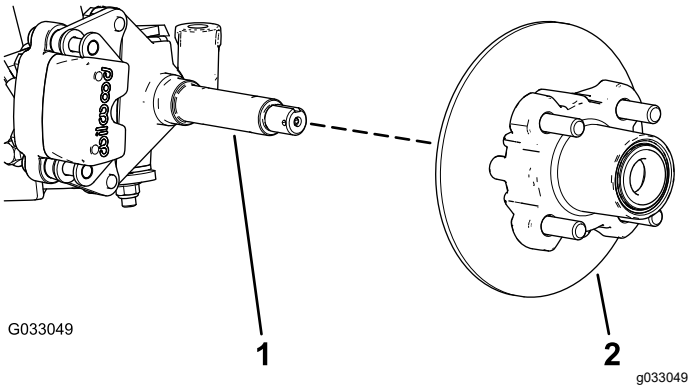

Figure 32

1. Spindle
2. Hub and rotor assembly

7. Wipe clean the spindle with a rag.
8. Repeat steps 1 through 7 to the hub and rotor at the other side of the machine.

Greasing the Wheel Bearings

1. Remove the outboard bearing and bearing race from the hub (Figure 33).

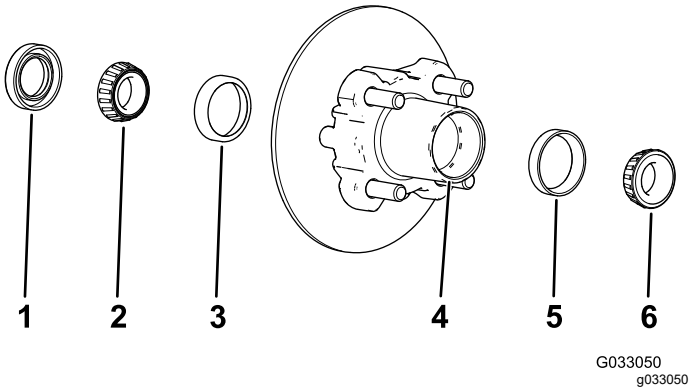

Figure 33

1. Seal
2. Inboard bearing
3. Inboard-bearing race
4. Bearing cavity (hub)
5. Outboard-bearing race
6. Outboard bearing

2. Remove the seal, inboard bearing from the hub (Figure 33).
3. Wipe clean the seal and check for wear and damage.

   Note: Do not use cleaning solvent to clean the seal. Replace the seal if it is worn or damaged.
4. Clean the bearings and races, and check these parts for wear and damage.

   Note: Replace all worn or damaged parts. Ensure that the bearings and races are clean and dry.
5. Clean the cavity of the hub of all grease, dirt, and debris (Figure 33).
6. Pack the bearings with the specified grease.
7. Fill the cavity of hub 50 to 80% full of the specified grease (Figure 33).
8. Assemble the inboard bearing onto the race at the inboard side of the hub and install the seal (Figure 33).
9. Repeat steps 1 through 8 to the bearings for the other hub.

Installing the Hub and Rotor

1. Apply a light coat of the specified grease to the spindle (Figure 34).

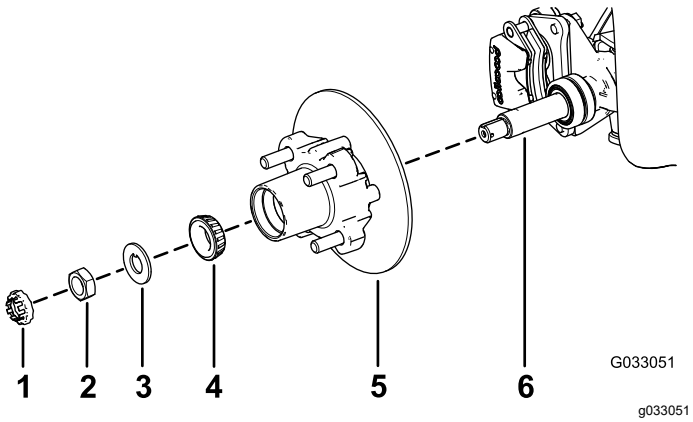

Figure 34

1. Nut retainer
2. Spindle nut
3. Tab washer
4. Outer bearing
5. Hub, rotor, inner bearing, race, and seal
6. Spindle

2. Assemble the hub and rotor onto the spindle with the rotor inboard (Figure 34).
3. Assemble the outboard bearing onto the spindle and seat the bearing to the outboard race (Figure 34).
4. Assemble the tab washer onto the spindle (Figure 34).
5. Thread the spindle nut onto the spindle and tighten the nut to 15 N·m (11 ft-lb), while rotating the hub to seat the bearing (Figure 34).
6. Loosen the spindle nut until the hub rotates freely.
7. Torque the spindle nut to 170 to 225 N·cm (15 to 20 in-lb).
8. Install the retainer over the nut and check the alignment of the slot in the retainer and the hole in the spindle for the cotter pin (Figure 35).

   Note: If the slot in the retainer and the hole in the spindle are not aligned, tighten the spindle nut to align the slot and hole to a maximum torque of 226 N·cm (20 in-lb) on the nut.

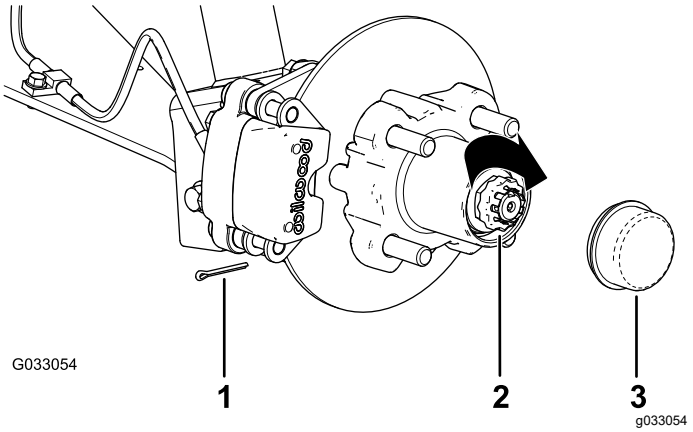

Figure 35

1. Cotter pin
2. Nut retainer
3. Dust cap

9. Install the cotter pin and bend each legs around the retainer (Figure 35).
10. Install the dust cap onto the hub (Figure 35).
11. Repeat steps 1 through 10 for the hub and rotor at the other side of the machine.

Installing the Brakes and Wheels

1. Clean the 2 flange-head bolts (3/8 x 3/4 inch) and apply a coat of medium-strength thread-locking compound to the threads of the bolts.
2. Align the brake pads to either side of the rotor (Figure 30) and the holes in the caliper bracket with the holes in the brake mount of the spindle frame (Figure 34).
3. Secure the caliper bracket to the spindle frame (Figure 30) using the 2 flange-head bolts (3/8 x 3/4 inch).

   Torque the 2 flange-head bolts to 47 to 54 N·m (35 to 40 ft-lb).
4. Align the holes in the wheel to the studs of the hub and assemble the wheel to the hub with the valve stem outward (Figure 29).

   Note: Ensure that the mounting surface of the wheel is flush with the hub.
5. Secure the wheel to the hub using the lug nuts (Figure 29).

   Torque the lug nuts to 108 to 122 N·m (80 to 90 ft-lb).
6. Repeat steps 1 through 5 for the brake and wheel on the other side of the machine.

Electrical System Maintenance

Using the Battery-Disconnect Switch

1. Unplug the power cord to the battery charger if it is connected.
2. Raise the cargo bed.
3. Move the battery-disconnect switch to the desired position as shown in Figure 36.

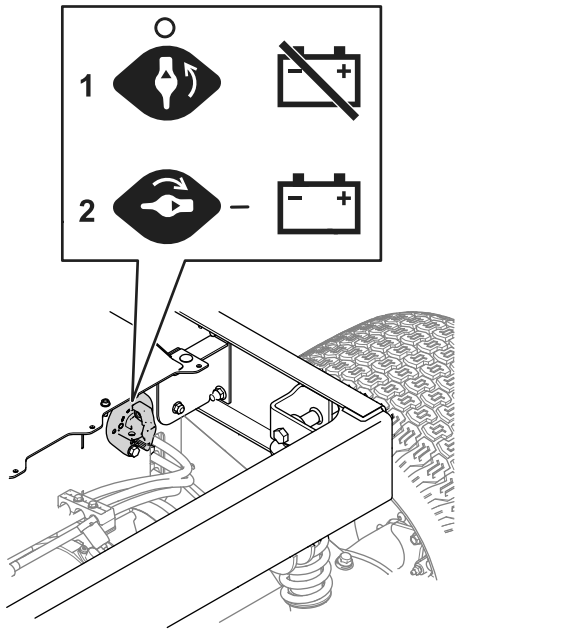

g428503

Figure 36

1. Turn the switch to the OFF position to de-energize the machine electrically.
2. Turn the switch to the ON position to energize the machine electrically.

Servicing the Batteries

Note: The machine is equipped with 4 lithium-ion batteries.

A lithium-ion battery must be disposed of or recycled in accordance with local and federal regulations. If a battery requires service, contact your authorized Toro distributor for assistance.

Do not open the battery. If you are having problems with a battery, contact your authorized Toro distributor for assistance.

Maintaining the Lithium-Ion Batteries

⚠ WARNING

The batteries contain high voltage, which could burn or shock you.

- **Do not attempt to open the batteries.**
- **Use extreme care when handling a battery with a cracked case.**
- **Use only the charger designed for the batteries.**

The lithium-ion batteries hold a sufficient charge to perform intended work during its life span.

To achieve maximum life and use from your batteries, follow these guidelines:

- Do not open the battery.
- Store/park the machine in a clean, dry garage or storage area, **away from direct sunlight, heat sources, rain, and wet conditions.** Do not store it in a location where the temperature exceeds the range specified in Battery Storage Requirements (page 43). **Temperatures outside of this range will damage your batteries.** High temperatures during storage, especially at a high state of charge, reduces the life of the batteries.
- When storing the machine for more than 10 days, ensure that the machine is in a cool and dry location, out of sunlight, rain, and wet conditions.
- Use lights only when it is necessary.

Maintaining the Battery Charger

Important: **All electrical repairs should be performed by an authorized Toro distributor only.**

The charger requires little maintenance other than protecting it from damage and weather.

- Clean the battery-charger cords and case with a slightly damp cloth after each use.

  Note: Do not clean the dielectric grease from the terminals.
- Coil the cords when not in use.
- Periodically examine the cords for damage, and replace them when necessary with Toro-approved parts.

Locating the Fuses

The 12 V and 60 V fuses (Figure 37) are located under the hood.

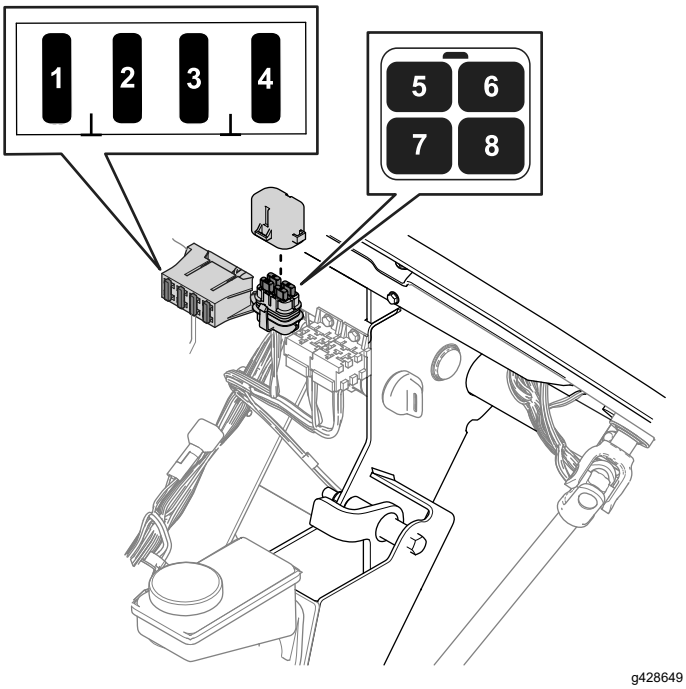

g428649

Figure 37

1. Horn (20 A)
2. Display power (10 A)
3. Main system B+ (10 A)
4. DC to DC (20 A)
5. USB (5 A)
6. Headlights (7.5 A)
7. Alarm (5 A)
8. Telematics (5 A)

The battery charger (30 A) and machine power (200 A) fuses (Figure 38) are located under the cargo bed and battery cover.

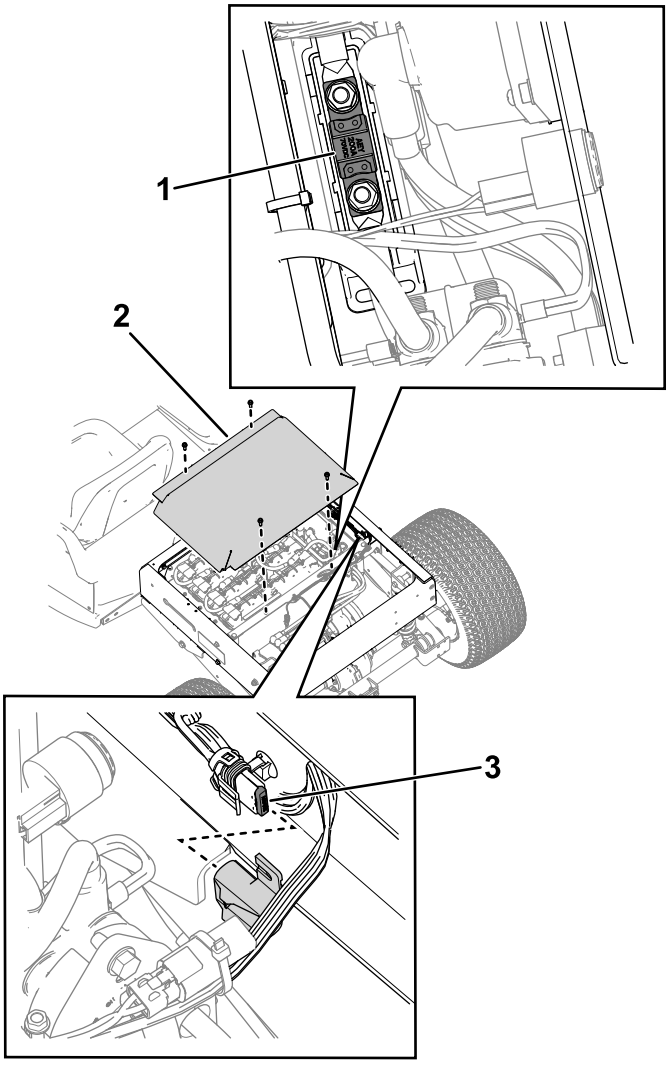

g430320

Figure 38

1. Machine power fuse (200 A)
2. Battery cover
3. Battery charger fuse (30 A)

Maintaining the Headlights

Replacing the Headlight

Specification: See your *Parts Catalog*.

1. Disconnect the battery power; refer to Using the Battery-Disconnect Switch (page 35).
2. Open the hood.
3. Disconnect the electrical connector for the harness from the connector of the lamp assembly (Figure 39).

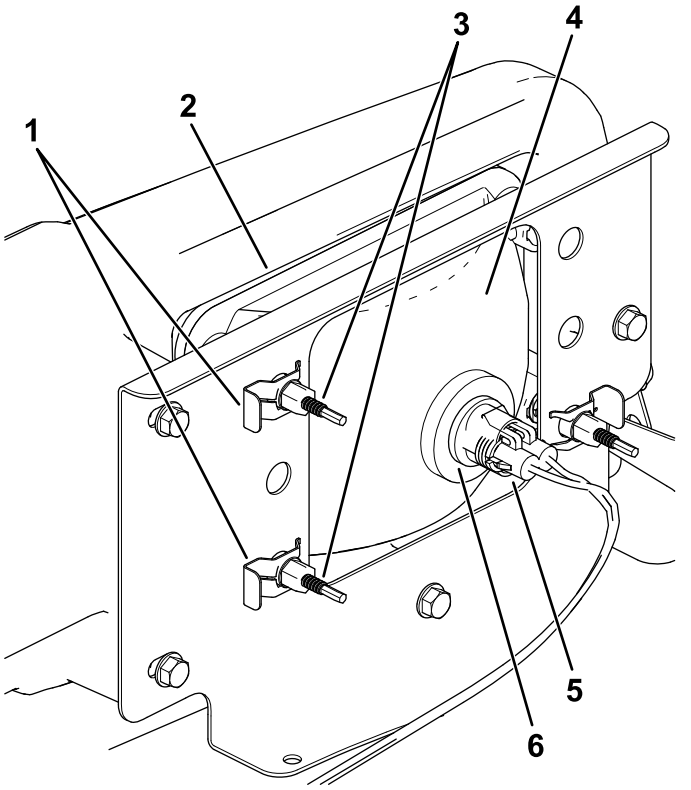

Figure 39

1. Speed clip
2. Opening in the bumper
3. Adjustment screw
4. Headlight
5. Harness-electrical connector
6. Lamp assembly

4. Remove the speed clips that secure the headlight to the headlight bracket (Figure 39).

   Note: Retain all parts for installation of the new headlight.

5. Remove the headlight assembly by moving it forward through the opening in the front bumper (Figure 39).
6. Install the new headlight through the opening in the bumper (Figure 39).

   Note: Ensure the adjustment posts are lined up with the holes in the mounting bracket behind the bumper.

7. Secure the headlight assembly with the speed clips that you removed in step 4.
8. Connect the electrical connector for the harness to the connector of the lamp assembly (Figure 39).
9. Adjust the headlights to direct the beams to the desired position, refer to Adjusting the Headlights (page 37).

Adjusting the Headlights

Use the following procedure to adjust the headlight beam position whenever a headlight assembly is replaced or removed.

1. Park the machine on a level surface with the headlights approximately 7.6 m (25 ft) from a wall (Figure 40).
2. Measure the distance from the floor to the center of the headlight and make a mark on the wall at the same height.
3. Turn the key switch to the ON position, and turn on the headlights.
4. Take note of where the headlights aim on the wall.

   The brightest part of the headlight beam should be 20 cm (8 inches) below the mark placed on the wall (Figure 40).

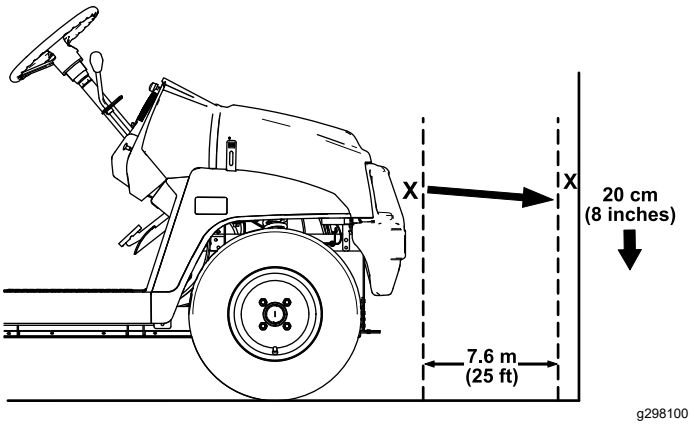

Figure 40

5. At the back of the headlight assembly, rotate adjustment screws (Figure 39) to pivot the headlight assembly and align the position of the cast beam.
6. Connect the battery power; refer to Using the Battery-Disconnect Switch (page 35).

Maintaining the Tires

Service Interval: Every 100 hours—Check the condition of the tires and rims.

Every 100 hours—Torque the wheel-lug nuts.

1. Inspect the tires and rims for signs of wear and damage.

   Note: Operating accidents, such as hitting curbs, can damage a tire or rim and also disrupt wheel alignment, so inspect tire condition after an accident.

2. Torque the wheel lug nuts to 108 to 122 N·m (80 to 90 ft-lb).

Inspecting the Steering and Suspension Components

Service Interval: Every 100 hours—Inspect the steering and suspension for loose or damaged components.

With the steering wheel at the centered position (Figure 41), turn the steering wheel to the left or right. If you turn the steering wheel more than 13 mm (1/2 inch) to the left or right, and the tires do not turn, check the following steering and suspension components to ensure that they are not loose or damaged:

- Steering shaft to the steering-rack assembly joint

  Important: **Inspect the condition and security of the pinion-shaft seal (Figure 42).**

- Steering-rack assembly tie rods

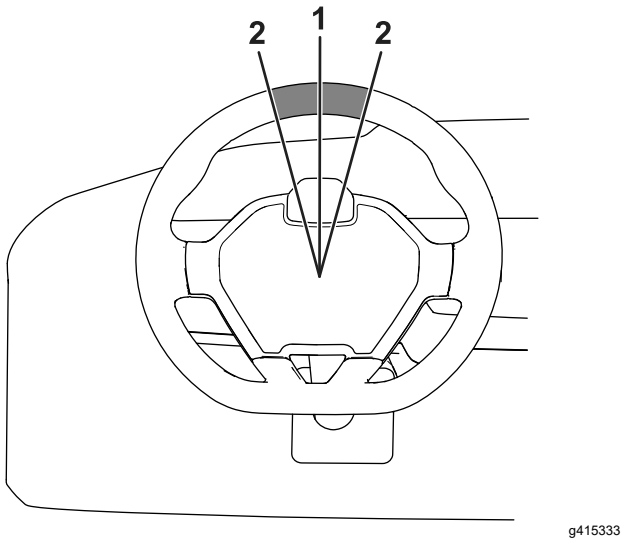

Figure 41

1. Steering wheel at the centered position
2. 13 mm (1/2 inch) from the center of the steering wheel

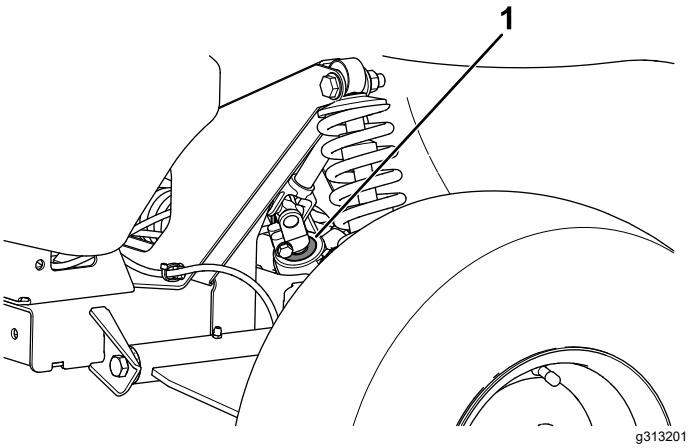

Figure 42

1. Pinion-shaft seal

Adjusting the Front Wheel Alignment

Service Interval: Every 100 hours/Yearly (whichever comes first)—Check the front wheel camber and toe-in.

Preparing to Adjust Camber or Toe-in

1. Check the tire pressure to ensure that the front tires are inflated to 82 kPa (12 psi).
2. Either add weight to the driver's seat equal to the average operator who will run the machine, or have an operator sit on the seat. The weight

or operator must remain on the seat for the duration of the adjustment procedure.

3. On a level surface, roll the machine straight back 2 to 3 m (6 to 10 ft) and then straight forward to the original starting position. This allows the suspension to settle into the operating position.

Adjusting the Camber

Owner provided tools: spanner wrench, Toro Part 132-5069; refer to your authorized Toro distributor.

Important: **Make the camber adjustments only if you are using a front attachment or if there is uneven tire wear.**

1. Check the camber alignment at each wheel; the alignment should be as close to neutral (zero) as possible.

   Note: The tires should be aligned with the tread evenly on the ground to reduce uneven wear.

2. If the wheel camber is out of alignment, use the spanner wrench to rotate the collar on the shock absorber to align the wheel (Figure 43).

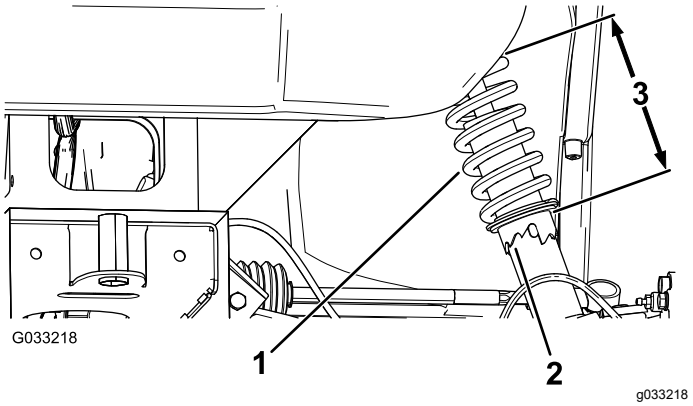

Figure 43

1. Shock-absorber spring
2. Collar
3. Spring length

Adjusting the Front Wheel Toe-in

Important: **Before adjusting toe-in, ensure that the camber adjustment is as close to neutral as possible; refer to Adjusting the Camber (page 39).**

1. Ensure that the front tires are facing straight ahead.
2. Measure the distance between both of the front tires at the axle height at both the front and rear of the front tires (Figure 44).

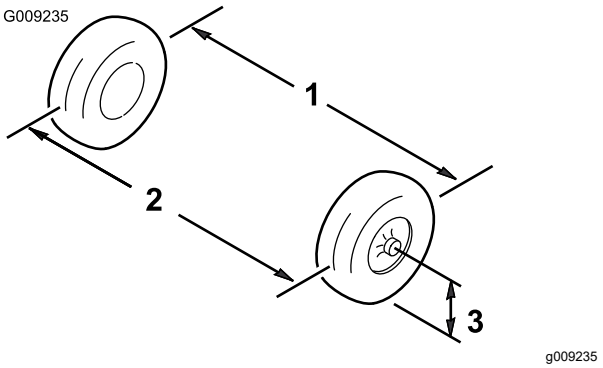

Figure 44

1. Tire center line—back
2. Tire center line—front
3. Axle center line

3. If the measurement does not fall within 0 to 6 mm (0 to 1/4 inch), loosen the jam nuts at the outer end of the tie rods (Figure 45).

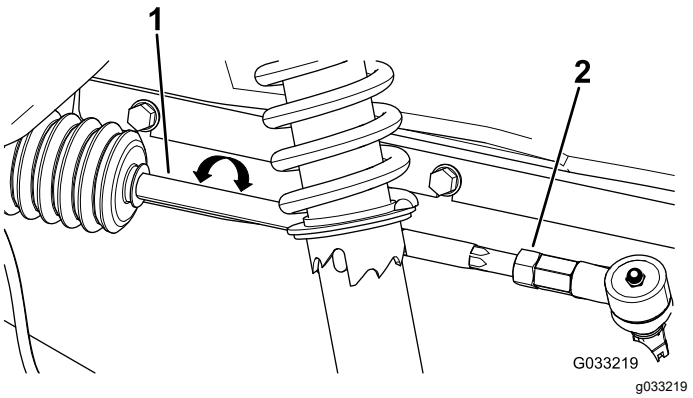

Figure 45

1. Tie rod
2. Jam nut

4. Rotate both tie rods to move the front of the tire inward or outward.
5. Tighten the tie rod jam nuts when the adjustment is correct.
6. Ensure that there is full travel of the steering wheel in both directions.

Checking the Transaxle-Fluid Level

Service Interval: Every 100 hours—Check the transaxle-fluid level.

1. Remove the fill plug on the transaxle (Figure 46).

   Note: The fluid level should be even with the bottom of the fill plug.

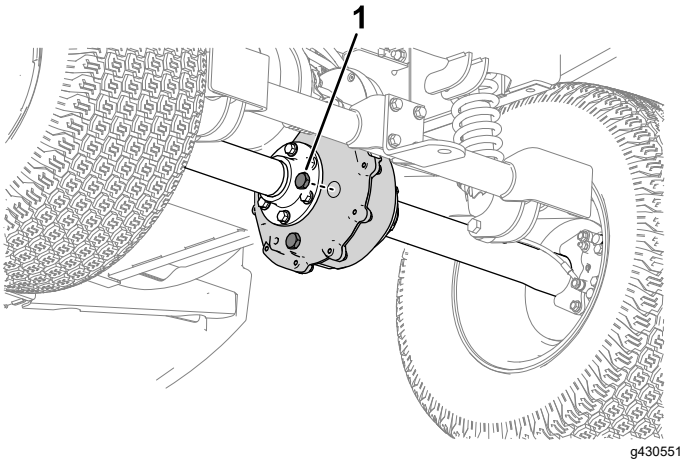

Figure 46

1. Fill plug

2. If the fluid level is low, remove the fill plug and add the specified fluid [indicated in Changing the Transaxle Fluid (page 40)] until it runs out of the hole (Figure 46).
3. Install the fill plug and torque it to 27 to 41 N·m (20 to 30 ft-lb).

Changing the Transaxle Fluid

Service Interval: Every 100 hours—Check the transaxle for leaks.

Every 800 hours/Yearly (whichever comes first)—Change the transaxle fluid.

Fluid Type: Mobil 424

Fluid Capacity: 0.95 L (1 US qt)

1. Align a drain pan under the transaxle drain plug (Figure 47).

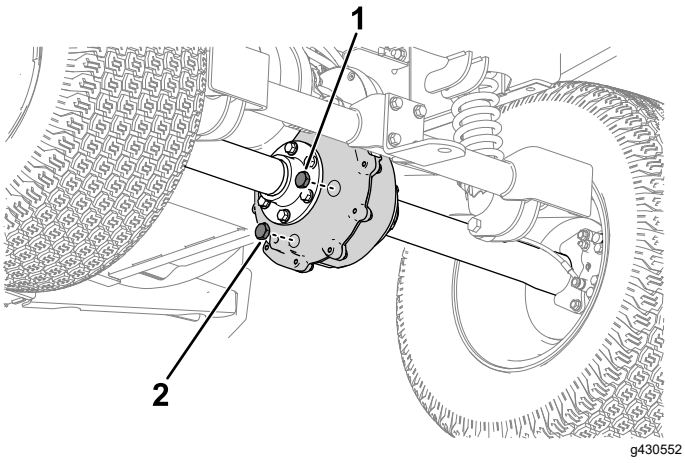

Figure 47

1. Fill plug
2. Drain plug

2. Remove the fill plug (Figure 47).
3. Remove the drain plug and allow the fluid to drain completely.
4. Install the drain plug and torque it to 12 to 19 N·m (9 to 14 ft-lb).
5. Fill the transaxle with the specified fluid through the fill-plug hole until it runs out of the fill hole.
6. Install the fill plug and torque it to 27 to 41 N·m (20 to 30 ft-lb).

Brake Maintenance

Inspecting the Brakes

Service Interval: Every 100 hours

Important: **Brakes are a critical safety component of the machine. Closely inspect them at the recommended service interval to ensure optimum performance and safety.**

- Inspect the brake lining for wear or damage. If the lining (brake pad) thickness is less than 1.6 mm (1/16 inch), replace the brake lining.
- Inspect the backing plate and other components for signs of excessive wear or deformation. Replace any deformed components.
- Inspect the brake lines, fittings, and clamps for signs of leakage, deterioration, or loose connections.

  Note: Repair any damaged or leaking braking system component before using the machine.
- Check the brake-fluid level; refer to Checking the Brake-Fluid Level (page 41).

Checking the Brake-Fluid Level

Service Interval: Before each use or daily—Check the brake-fluid level. Check the brake-fluid level before you first start the machine.

Brake-fluid type: DOT 3

1. Raise the hood to access to the master brake cylinder and reservoir (Figure 48).

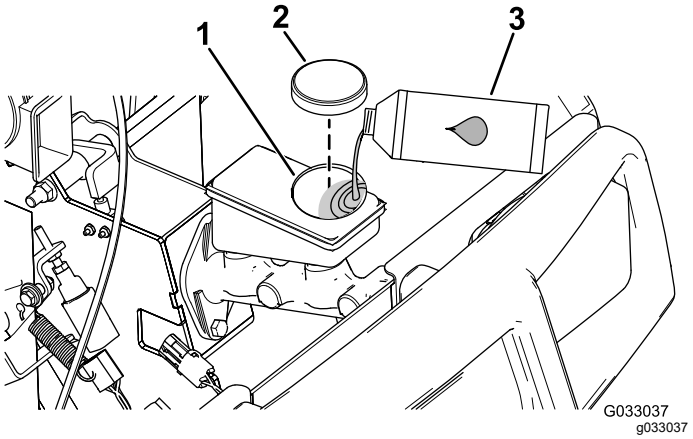

Figure 48

1. Filler neck (reservoir)
2. Reservoir cap
3. DOT 3 brake fluid

2. Look at the outline of the fluid level at the side of the reservoir (Figure 49).

   Note: The level should be above the Minimum line.

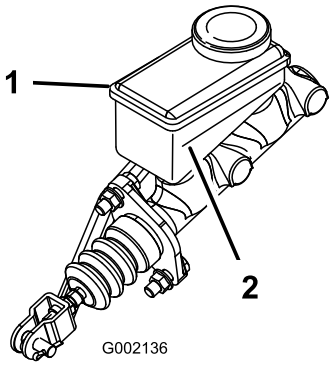

Figure 49

1. Brake-fluid reservoir
2. Minimum line

3. If the fluid level is low, preform the following:
   A. Clean the area around the reservoir cap and remove the cap (Figure 48).
   B. Add DOT 3 brake fluid to the reservoir until the fluid level is above the Minimum line (Figure 49).

      Note: Do not overfill the reservoir with brake fluid.
   C. Install the reservoir cap (Figure 48).
4. Close the hood.

Changing the Brake Fluid

Service Interval: Every 1,000 hours

Contact your authorized Toro distributor.

Chassis Maintenance

Adjusting the Cargo-Bed Latches

If the cargo-bed latch is out of adjustment, the cargo bed vibrates up and down as you drive the machine. You can adjust the latch posts to make the latches hold the cargo bed snugly to the chassis.

1. Loosen the locknut on the end of the latch post (Figure 50).

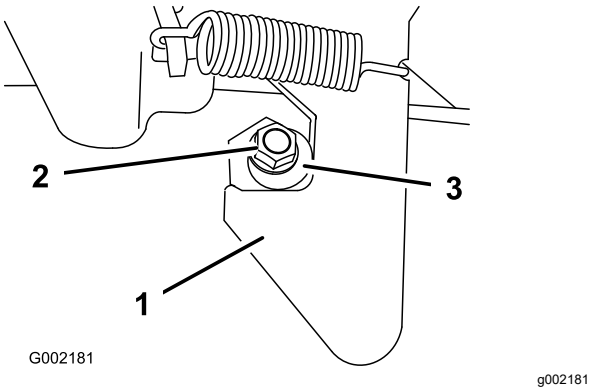

Figure 50

1. Latch
2. Locknut
3. Latch post

2. Rotate the latch post clockwise until it is snug against the hook portion of the latch (Figure 50).
3. Torque the locknut to 19.7 to 25.4 N·m (175 to 225 in-lb).
4. Repeat this steps 1 through 3 for the latch on the other side of the machine.

Cleaning

Washing the Machine

Service Interval: Before each use or daily—Wash the machine.

Wash the machine as needed using water alone or with a mild detergent. You may use a rag when washing the machine.

Important: **Do not use brackish or reclaimed water to clean the machine.**

Important: **Pressurized water is not recommended when washing the machine. It may damage the electrical system, loosen important decals, or wash away necessary grease at friction points. Avoid excessive use of water, especially near the control panel, motor, motor controller, charger, back of the dashboard, and batteries.**

Storage

Storage Safety

- Shut off the machine, remove the key, and wait for all movement to stop before you leave the operator's position. Allow the machine to cool before adjusting, servicing, cleaning, or storing it.
- The owner is responsible for periodically inspecting the charging and storage areas or facilities and review procedures to ensure that the requirements are being followed.

Storing the Machine

Service Interval: Every 200 hours—Inspect the service and parking brakes.

Every 400 hours—Visually inspect the brakes for worn brake shoes.

1. Park the machine on a level surface, shut off the machine, and remove the key.
2. Clean dirt and grime from the entire machine, including the outside of the motor housing.

   Important: **You can wash the machine with mild detergent and water. Do not use high-pressure water to wash the machine. Pressure-washing may damage the electrical system or wash away necessary grease at friction points. Avoid excessive use of water, especially near the control panel, lights, motor, and battery.**
3. Check the brakes; refer to Inspecting the Brakes (page 41).
4. Check the tire pressure; refer to Checking the Tire Pressure (page 18).
5. Check and tighten all bolts, nuts, and screws. Repair or replace any part that is damaged.
6. Paint all scratched or bare metal surfaces.

   Note: Paint is available from your authorized Toro distributor.
7. Cover the machine to protect it and keep it clean.

Battery Storage Requirements

Note: You do not need to remove the batteries from the machine for storage.

Refer to the temperature limits for storage in the following table:

Temperature Limits for Storage

Storage Temperature	Appropriate Storage Time
45° to 55°C (113° to 131°F)	1 week
25° to 45°C (77° to 113°F)	3 weeks
-20° to 25°C (-4° to 77°F)	52 weeks

Important: **Temperatures outside of these ranges will damage your batteries.**

The temperature that the batteries are stored at will affect their long-term life. Storage for long periods of time at extreme temperatures will reduce the battery life. For temperatures above 25°C (77°F), only store the machine for the appropriate amount of time indicated in the table.

- Before you store the machine, charge or discharge the batteries between 40% to 60%.

  Note: A 50% charge is optimal to ensure a maximum battery life. When the batteries are charged to 100% before storage, the battery life shortens.

  If you anticipate that the machine will be stored for a longer period of time, charge the batteries to around 60%.
- For every 6 months of storage, check the battery-charge level and ensure that it is between 40% to 60%. If the charge is below 40%, charge the batteries between 40% to 60%.
- After charging the batteries, disconnect the battery charger from power.
- If you leave the charger on the machine, it will shut off after the batteries are fully charged and does not turn back on unless the charger is disconnected and reconnected.

California Proposition 65 Warning Information

What is this warning?

You may see a product for sale that has a warning label like the following:



WARNING: Cancer and Reproductive Harm—www.p65Warnings.ca.gov.

What is Prop 65?

Prop 65 applies to any company operating in California, selling products in California, or manufacturing products that may be sold in or brought into California. It mandates that the Governor of California maintain and publish a list of chemicals known to cause cancer, birth defects, and/or other reproductive harm. The list, which is updated annually, includes hundreds of chemicals found in many everyday items. The purpose of Prop 65 is to inform the public about exposure to these chemicals.

Prop 65 does not ban the sale of products containing these chemicals but instead requires warnings on any product, product packaging, or literature with the product. Moreover, a Prop 65 warning does not mean that a product is in violation of any product safety standards or requirements. In fact, the California government has clarified that a Prop 65 warning "is not the same as a regulatory decision that a product is 'safe' or 'unsafe.'" Many of these chemicals have been used in everyday products for years without documented harm. For more information, go to https://oag.ca.gov/prop65/faqs-view-all.

A Prop 65 warning means that a company has either (1) evaluated the exposure and has concluded that it exceeds the "no significant risk level"; or (2) has chosen to provide a warning based on its understanding about the presence of a listed chemical without attempting to evaluate the exposure.

Does this law apply everywhere?

Prop 65 warnings are required under California law only. These warnings are seen throughout California in a wide range of settings, including but not limited to restaurants, grocery stores, hotels, schools, and hospitals, and on a wide variety of products. Additionally, some online and mail order retailers provide Prop 65 warnings on their websites or in catalogs.

How do the California warnings compare to federal limits?

Prop 65 standards are often more stringent than federal and international standards. There are various substances that require a Prop 65 warning at levels that are far lower than federal action limits. For example, the Prop 65 standard for warnings for lead is 0.5 µg/day, which is well below the federal and international standards.

Why don't all similar products carry the warning?

- Products sold in California require Prop 65 labelling while similar products sold elsewhere do not.
- A company involved in a Prop 65 lawsuit reaching a settlement may be required to use Prop 65 warnings for its products, but other companies making similar products may have no such requirement.
- The enforcement of Prop 65 is inconsistent.
- Companies may elect not to provide warnings because they conclude that they are not required to do so under Prop 65; a lack of warnings for a product does not mean that the product is free of listed chemicals at similar levels.

Why does Toro include this warning?

Toro has chosen to provide consumers with as much information as possible so that they can make informed decisions about the products they buy and use. Toro provides warnings in certain cases based on its knowledge of the presence of one or more listed chemicals without evaluating the level of exposure, as not all the listed chemicals provide exposure limit requirements. While the exposure from Toro products may be negligible or well within the "no significant risk" range, out of an abundance of caution, Toro has elected to provide the Prop 65 warnings. Moreover, if Toro does not provide these warnings, it could be sued by the State of California or by private parties seeking to enforce Prop 65 and subject to substantial penalties.