Form No. 3387-727 Rev E

TORO®

Count on it.

Parts Catalog

Tine Heads

ProCore® Aerator

Model No. 09711

Model No. 09719

Model No. 09736

Model No. 09737

Model No. 09739

Model No. 09794

Model No. 09796

Model No. 09797

Register at www.Toro.com.
Original Instructions (EN)

3387-727 E

Ordering Replacement Parts

To order replacement parts, please supply the part number, the quantity, and the description of each part desired.

Understanding Reference Numbers

Each identified part in an illustration has a reference number. The reference number for a part also appears in the parts list, along with other information about the part.

This catalog uses two special reference number formats, one to indicate parts in a service assembly and another to indicate the quantity of a given part in an illustration.

Service Assembly Reference Numbers

Parts in service assemblies have reference numbers in the form a:b. The a represents the reference number of the entire service assembly and the b represents a sequential number unique to each part within the service assembly.

For example, a wheel assembly might be identified by reference number 6, the tire by 6:1, the valve by 6:2, and the wheel by 6:3. When you order the assembly identified by reference number 6, you receive all parts identified by reference numbers 6:1,6:2, and 6:3. However, you may also order any part individually. Reference numbers of this type appear in illustration and in parts lists.

Reference Numbers Indicating Quantity

In an illustration, if a reference number indicates more than one part, the reference number has the form nX y. The n represents the quantity of the part, the X is the multiplication symbol, and the y represents the reference number.

For example, in an illustration, the reference number 2X 37 means that two of the parts identified by reference number 37 are indicated.

Contents

Needle Tine Head Assembly (Model 09739) 4
Mini Tine Head, 2 Rows of 5 Assembly (Model 09736). 5
Mini Tine Head, 1 Row of 6 Assembly (Model 09737). 6
3 Tine Head Assembly, 3/4 Inch (Model 09794) 7
4 Tine Head Assembly, 3/4 Inch (Model 09796) 8
TITAN QuickChange Three-Tine Head Assembly (Model 09711). 9
TITAN QuickChange Four-Tine Head Assembly (Model 09719). 10
3 Tine Head Assembly, 7/8 Inch (Model 09797) 11
Attachments and Accessories 12

© 2024—The Toro® Company
8111 Lyndale Avenue South
Bloomington, MN 55420

Contact us at www.Toro.com.
Printed in the USA.
All Rights Reserved

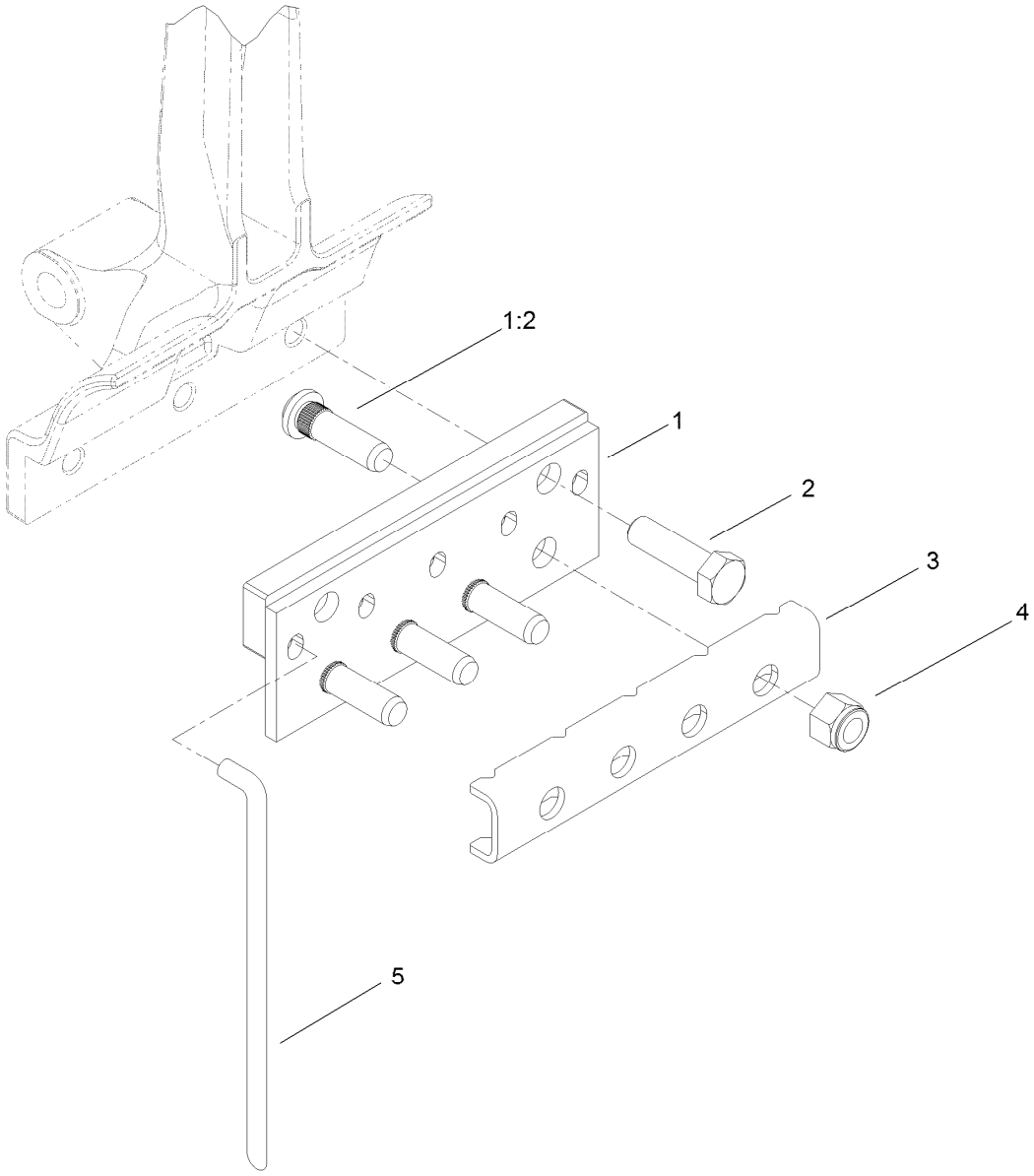

Needle Tine Head Assembly (Model 09739)

Ref.	*Part Number*	*Qty.*	*Description*
1	108-6846	2	Needle Tine Holder ASM
1:2	10-6830	4	Stud-Type, Drive
2	325-7	4	Screw-HH
3	108-6849-03	2	Clamp-Tine, Needle
4	3296-19	8	Nut-Hex
5	100-3620	10	Tine-Needle, 5MM X 6.43 ■●
5	100-3621	10	Tine-Needle, 8MM X 7.38 ■●

● Optional Equipment

■ Not supplied with kit.

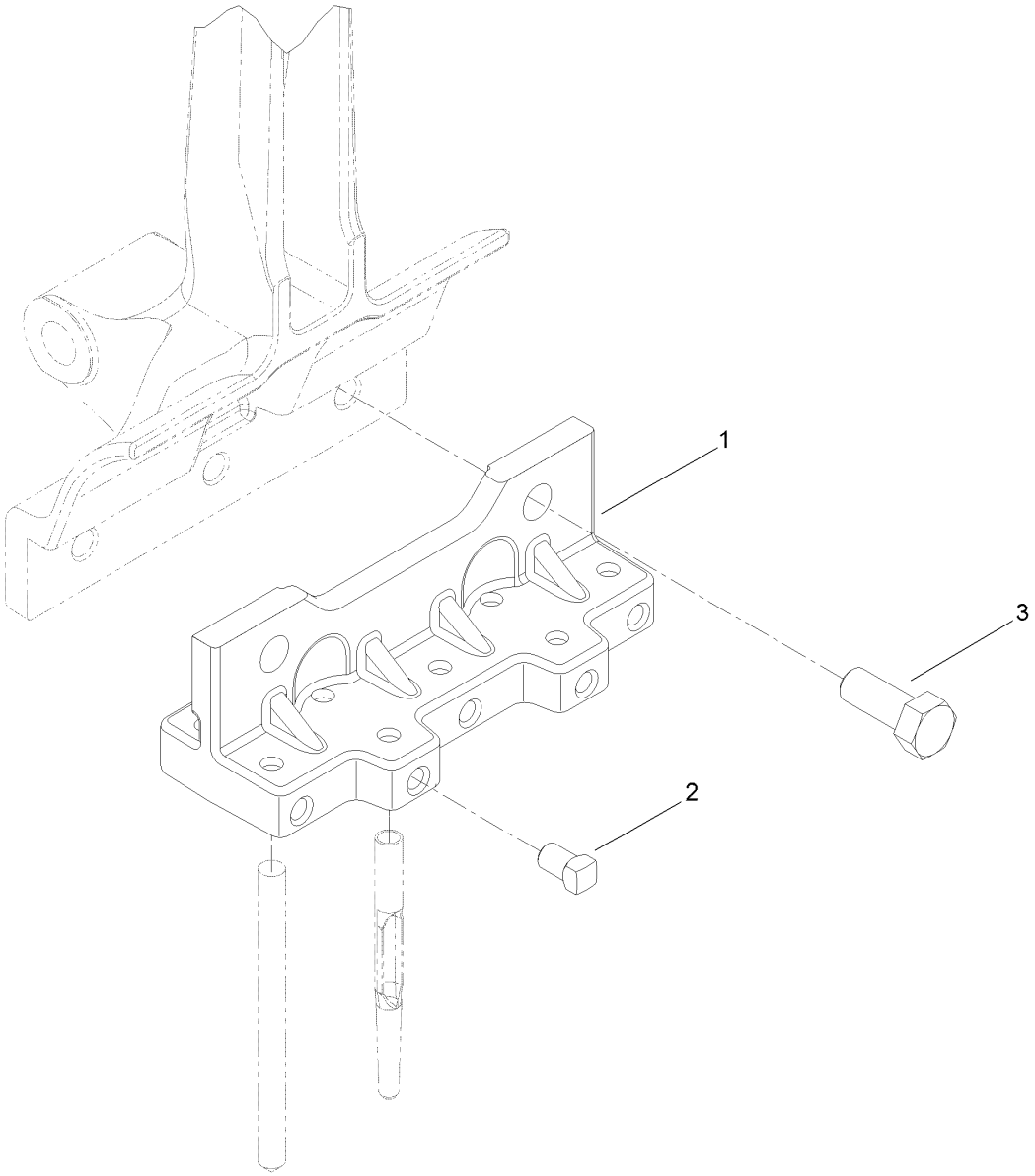

Mini Tine Head, 2 Rows of 5 Assembly (Model 09736)

Ref.	*Part Number*	*Qty.*	*Description*
1	105-1184	2	Tineholder
2	131-1739	20	Screw-Set, SQH
3	325-5	4	Screw-HH

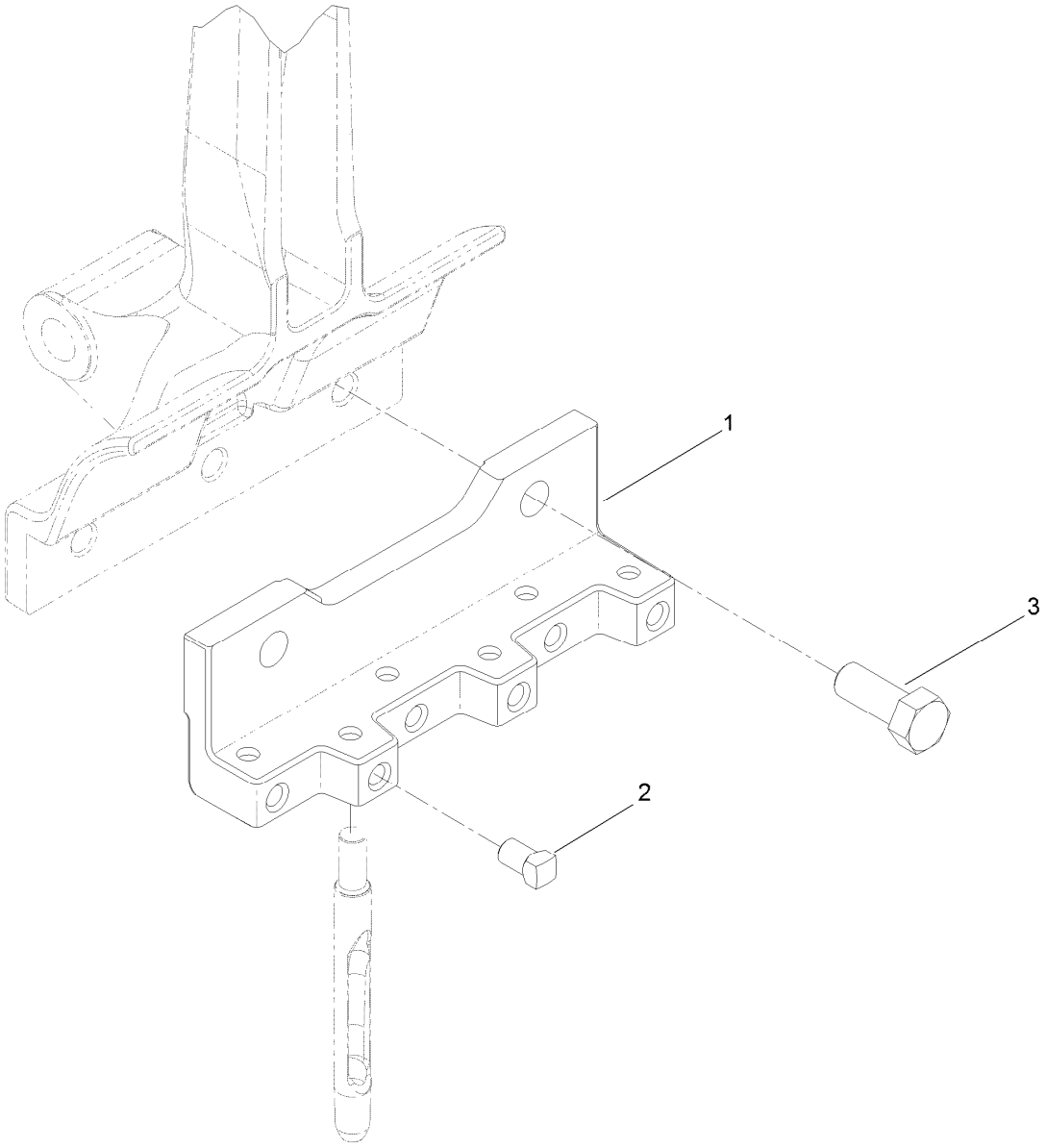

Mini Tine Head, 1 Row of 6 Assembly (Model 09737)

Ref.	*Part Number*	*Qty.*	*Description*
1	108-6809	2	Holder-Tine
2	131-1739	12	Screw-Set, SQH
3	325-5	4	Screw-HH

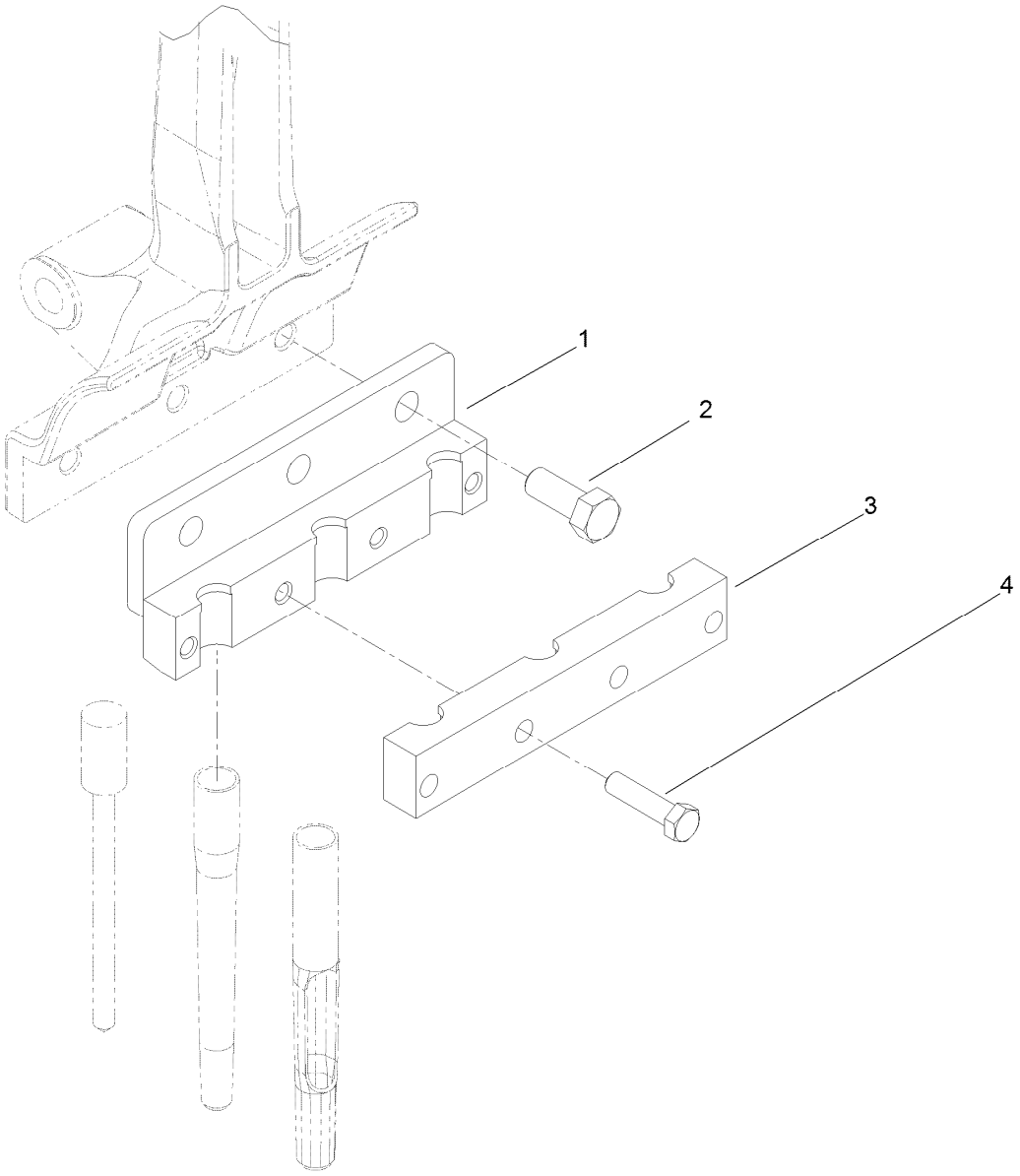

3 Tine Head Assembly, 3/4 Inch (Model 09794)

Ref.	*Part Number*	*Qty.*	*Description*
1	105-1036-03	2	3 Tine Holder ASM
2	325-5	6	Screw-HH
3	105-1038-03	2	Clamp-Holder, 3 Tine
4	323-8	8	Screw-HH

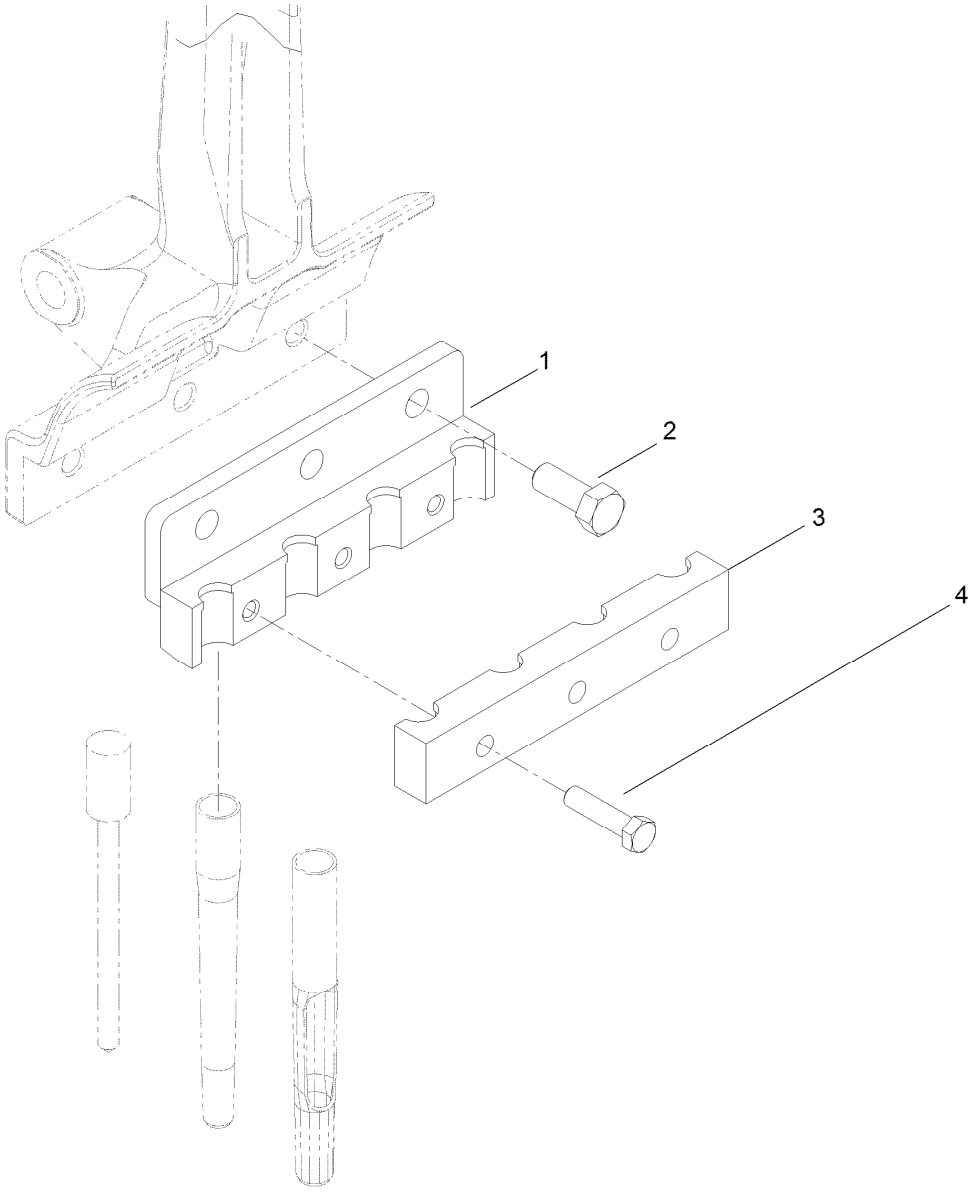

4 Tine Head Assembly, 3/4 Inch (Model 09796)

Ref.	*Part Number*	*Qty.*	*Description*
1	105-1045-03	2	4 Tine Holder ASM
2	325-5	6	Screw-HH
3	105-1032-03	2	Clamp-Holder, 4 Tine
4	323-8	6	Screw-HH

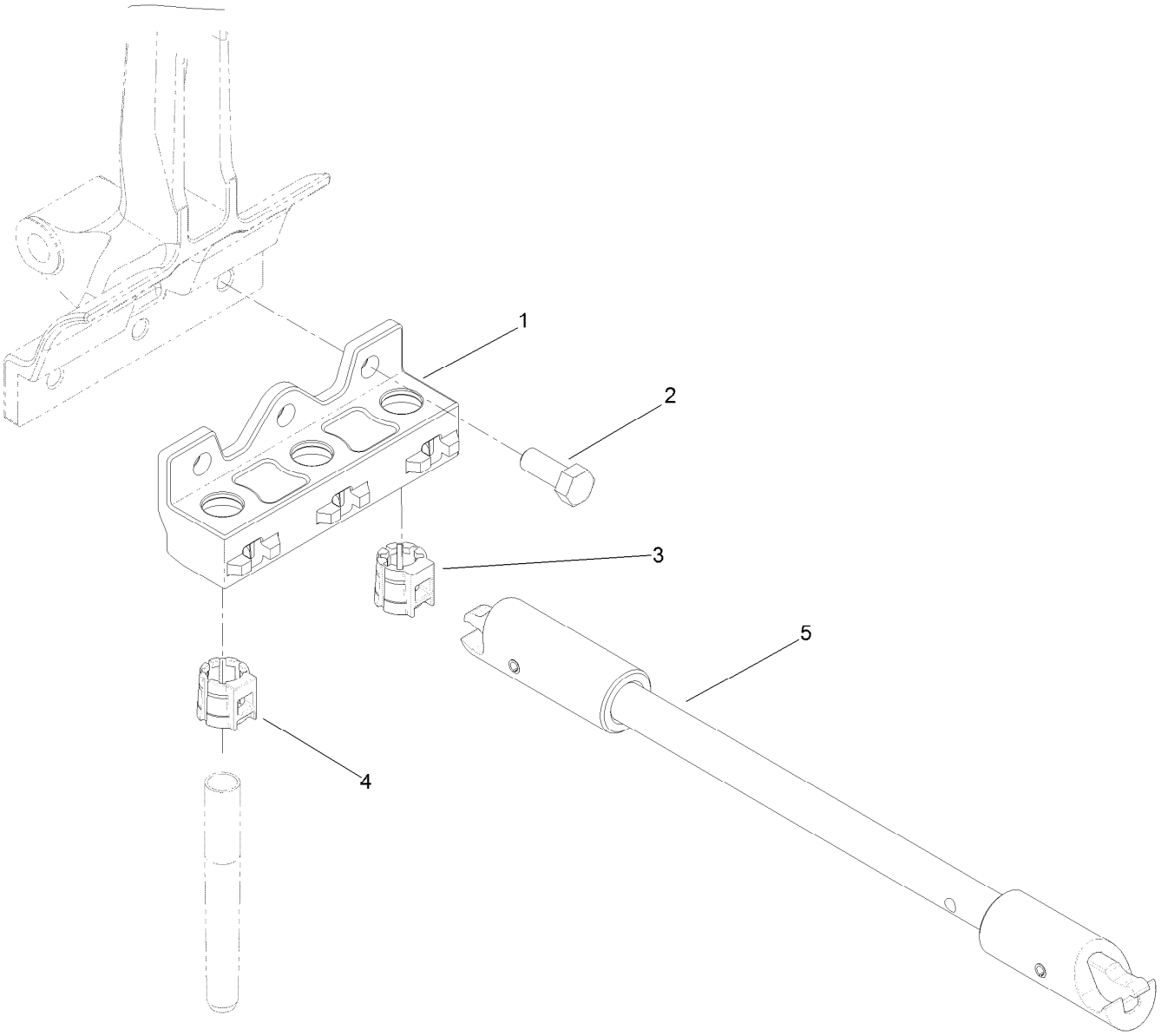

TITAN QuickChange Three-Tine Head Assembly (Model 09711)

Ref.	*Part Number*	*Qty.*	*Description*
1	110-4579	2	Holder-3 Tine
2	325-5	6	Screw-HH
3	108-6837	6	Insert-Sleeve, 3/4 Inch ■●
4	108-6838	6	Insert-Sleeve, 7/8 Inch ■●
5	114-0590-01	1	Sleeve Tool ASM ■●

● Optional Equipment

■ Not supplied with kit.

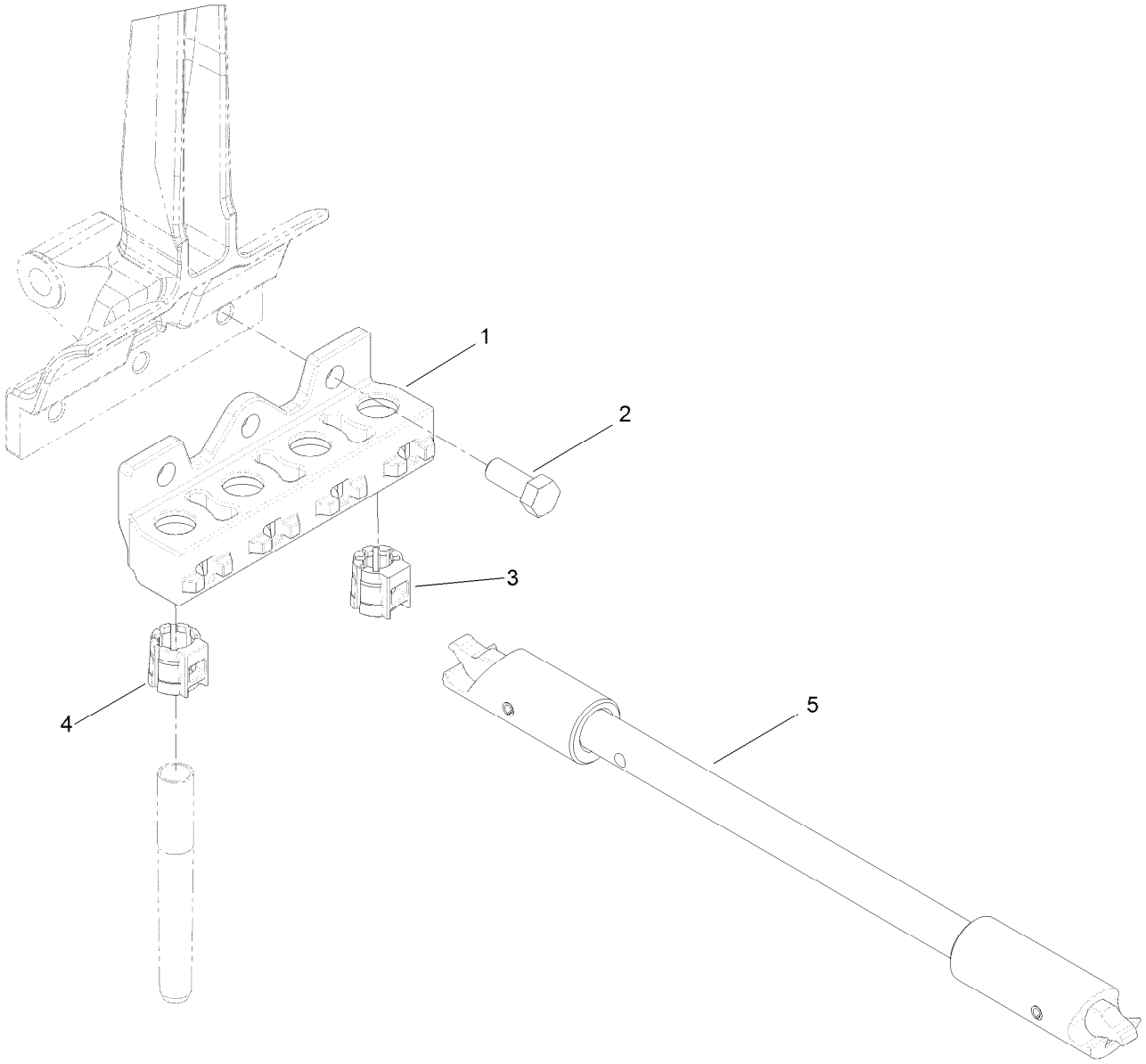

TITAN QuickChange Four-Tine Head Assembly (Model 09719)

Ref.	*Part Number*	*Qty.*	*Description*
1	110-4695	2	Holder-4 Tine
2	325-5	6	Screw-HH
3	108-6837	8	Insert-Sleeve, 3/4 Inch ●■
4	108-6838	8	Insert-Sleeve, 7/8 Inch ●■
5	114-0590-01	1	Sleeve Tool ASM ●■

● Optional Equipment

■ Not supplied with kit.

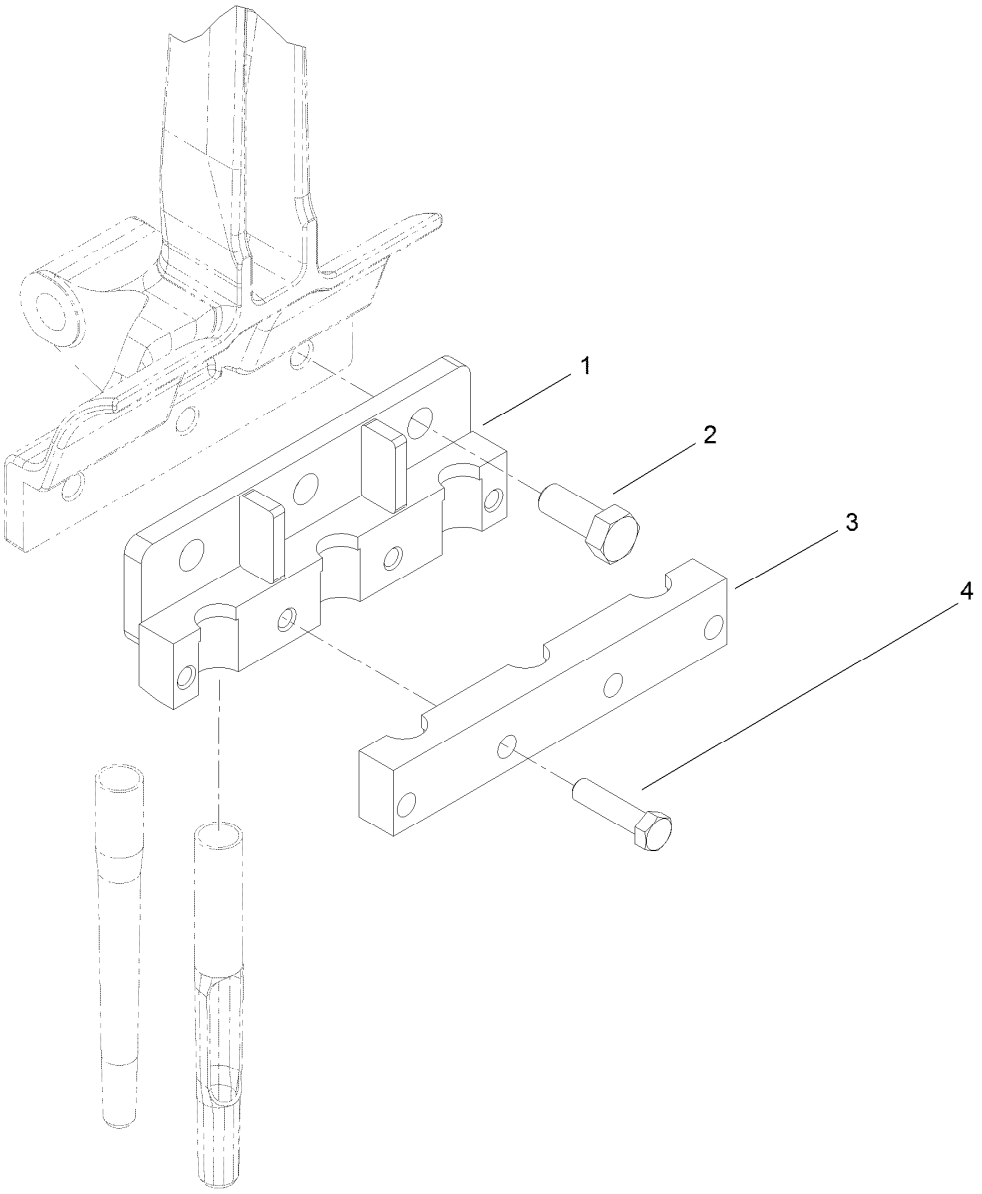

3 Tine Head Assembly, 7/8 Inch (Model 09797)

Ref.	*Part Number*	*Qty.*	*Description*
1	110-4692-03	2	Holder-7/8 Inch
2	325-5	6	Screw-HH
3	108-2124-03	2	Clamp-Tine
4	323-8	8	Screw-HH

Attachments and Accessories

For 09719 Tine Heads ProCore Aerator

Product Name	Model/Part
TINE-HOLLOW, 5/8 X 5.75	104-0984
TINE-SIDE EJECT, HD 3/4 X 5.75	104-9875
TINE-SIDE EJECT, HD 5/8 X 5.75	104-9876
TINE-SIDE EJECT, 7/8 X 5.75	104-9877
TINE-HOLLOW, 1/2 X 6.50	105-1180
TINE-HOLLOW, 3/8 X 4.75	108-9128
TINE-HOLLOW (AH6-475-4)	108-9129
TINE-HOLLOW, LW 5/8 X 4.75	108-9130
TINE-HOLLOW (AH6-575-3)	108-9132
TINE-HOLLOW, 1/2 X 5.50	108-9133
TINE-HOLLOW (AH6-575-5)	108-9134
TINE-HOLLOW, CARBIDE (CH6-650-3)	108-9135
TINE-HOLLOW (AH6-650-4)	108-9136
TINE-HOLLOW (AH6-650-5)	108-9137
TINE-HOLLOW (AH6-650-3)	108-9138
TINE-HOLLOW, CARBIDE (CH6-475-3)	108-9139
TINE-HOLLOW, CARBIDE (CH6-475-4)	108-9141
TINE-HOLLOW, CARBIDE (CH6-475-5)	108-9143
TINE-HOLLOW, CARBIDE (CH6-575-3)	108-9145
TINE-HOLLOW, CARBIDE (CH6-575-4)	108-9147
TINE-HOLLOW, CARBIDE (CH6-575-5)	108-9149
TINE-HOLLOW, CARBIDE (CH6-650-4)	108-9151
TINE-HOLLOW, CARBIDE (CH6-650-5)	108-9153
TINE-SIDE EJECT (AE6-475-3)	108-9159
TINE-SIDE EJECT (AE6-475-4)	108-9160
TINE-SIDE EJECT (AE6-475-5)	108-9161
TINE-SIDE EJECT (AE6-650-3)	108-9162
TINE-SIDE EJECT (AE6-575-3)	108-9163
TINE-SIDE EJECT (AE6-575-4)	108-9164
TINE-SIDE EJECT (AE6-575-5)	108-9165
TINE-SIDE EJECT, CARBIDE (CE6-650-3)	108-9166
TINE-SIDE EJECT, 1/2 X 6.50	108-9167
TINE-SIDE EJECT, 5/8 X 6.50	108-9168
TINE-SIDE EJECT, CARBIDE (CE6-475-3)	108-9170
TINE-SIDE EJECT, CARBIDE (CE6-475-4)	108-9172
TINE-SIDE EJECT, CARBIDE (CE6-475-5)	108-9174
TINE-SIDE EJECT, CARBIDE (CE6-575-3)	108-9176
TINE-SIDE EJECT, CARBIDE (CE6-575-4)	108-9178
TINE-SIDE EJECT, CARBIDE (CE6-575-5)	108-9180
TINE-SIDE EJECT, CARBIDE (CE6-650-4)	108-9182
TINE-SIDE EJECT, CARBIDE (CE6-650-5)	108-9184
TINE-SD EJECT, CARBIDE (CE7-475-5)	108-9186
TINE-SD EJECT, CARBIDE (CE7-575-5)	108-9188
TINE-HOLLOW (AH7-475-5)	108-9190
TINE-HOLLOW (AH7-475-6)	108-9191
TINE-HOLLOW, (AH7-575-5)	108-9192

Attachments and Accessories (continued)

TINE-HOLLOW, (AH7-575-6) 108-9193
TINE-SIDE EJECT (AE7-475-5) 108-9194
TINE-SIDE EJECT (AE7-475-6) 108-9195
TINE-SIDE EJECT (AE7-575-5) 108-9196
TINE-SIDE EJECT (AE7-575-6) 108-9197
TINE-SOLID (AS6-450-25) 108-9198
TINE-SOLID (AS6-450-3) 108-9199
TINE-SOLID (AS6-450-35) 108-9200
TINE-SOLID (AS6-450-4) 108-9201
TINE-SOLID (AS6-450-5) 108-9202
TINE-SOLID (AS6-450-6) 108-9203
TINE-SOLID (AS6-550-25) 108-9204
TINE-SOLID (AS6-550-3) 108-9205
TINE-SOLID (AS6-550-35) 108-9206
TINE-SOLID (AS6-550-4) 108-9207
TINE-SOLID (AS6-550-5) 108-9208
TINE-SOLID (AS6-550-6) 108-9209
TINE-SOLID (AS6-650-3) 108-9210
TINE-SOLID, 9MM X 5.50 108-9211
TINE-SOLID, 11MM 108-9212
TINE-SOLID, 13MM X 6.38 108-9213
TINE-SOLID, 16MM X 6.38 108-9214
TINE-CROSS, 1/2 (AX6-450-5) 108-9221
TINE-CROSS, 5/8 (AX6-450-62) 108-9222
TINE-CROSS, 3/4 (AX6-450-75) 108-9223
TINE-CROSS, 1/2 (AX6-550-5) 108-9224
TINE-CROSS, 3/4 (AX6-550-75) 108-9226
TINE-CROSS, 1/2 (AX6-650-5) 108-9227
TINE-CROSS, 5/8 (AX6-650-62) 108-9228
TINE-CROSS, 3/4 (AX6-650-75) 108-9229
TINE-SLICING, 3/4 (AB6-450-75) 108-9239
TINE-SLICING, 3/4 (AB6-550-75) 108-9240
TINE-SLICING, 3/4 (AB6-650-75) 108-9241
TINE-SLICING, HD (550-75) 108-9242
TINE-SLICING, HD (650-75) 108-9243
TINE-SOLID, ROUND (550-75) 108-9244
TINE-SOLID, ROUND (650-75) 108-9245
TINE-SOLID, ROUND (550-75) 108-9246
TINE-SOLID, ROUND (550-88) 108-9247
TINE-SOLID, ROUND (650-75) 108-9248
TINE-SOLID, ROUND (650-88) 108-9249
TINE-CROSS (550-88) 108-9259
TINE-HD 3/4 MT (575-5) 108-9260
TINE-HD 3/4 MT (575-6) 108-9261
TINE-HD 7/8 MT (575-6) 108-9264
TINE-HD 7/8 MT (575-7) 108-9265
TINE-CROSS, CARBIDE 112-1313
TINE-CROSS, CARBIDE 112-1314
TINE-FAIRWAY, SPLIT (GF7-575-6) 112-5121

Attachments and Accessories (continued)

TINE-FAIRWAY, SPLIT (GF6-575-6) 112-5122
TINE-FAIRWAY, SPLIT (GF7-575-7) 112-5123
TINE-HOLLOW 114-0550
TINE-HOLLOW 114-0551
TINE-HOLLOW, CARBIDE 114-0553
TINE-SD EJECT 114-0555
TINE-SD EJECT, CARBIDE 114-0557
TINE-SD EJECT 114-0558
TINE-SD EJECT, CARBIDE 114-0560
TINE-HOLLOW, CARBIDE 114-0561
TINE-HOLLOW, 5/8 X 4.75 59-3670
TINE-HOLLOW, 3/4 X 4.75 62-4600
TINE-HOLLOW, 1/2 X 4.75 66-9140
TINE-HOLLOW, 3/4 X 5.75 86-9720
TINE-SIDE EJECT, 3/4 X 5.75 92-7900

For 09736 Tine Heads ProCore Aerator

Product Name	Model/Part
TINE-SIDE EJECT, 5MM X 4.38	108-9104
TINE-SIDE EJECT, 6MM X 4.00	108-9105
TINE-QUAD (AE3-450-4)	108-9106
TINE-QUAD, CARBIDE (CE3-450-2)	108-9112
TINE-QUAD, CARBIDE (CE3-450-3)	108-9114
TINE-QUAD, CARBIDE (CE3-450-4)	108-9116
TINE-QUAD, CARBIDE (CE3-500-2)	108-9120
TINE-QUAD, CARBIDE (CE3-500-3)	108-9122
TINE-QUAD, CARBIDE (CE3-500-4)	108-9124
TINE-CROSS, 3/8 (AX3-450-37)	108-9215
TINE-CROSS, 1/2 (AX3-450-5)	108-9216
TINE-CROSS, 5/8 (AX3-450-62)	108-9217
TINE-CROSS, 3/8 (AX3-550-37)	108-9218
TINE-CROSS, 1/2 (AX3-550-5)	108-9219
TINE-CROSS, 5/8 (AX3-550-62)	108-9220
TINE-SOLID (AS3-450-2)	108-9230
TINE-SOLID (AS3-450-25)	108-9231
TINE-SOLID (AS3-450-3)	108-9232
TINE-SOLID, 3/8 X 5.00	108-9233
TINE-SOLID (AS3-550-2)	108-9234
TINE-SOLID (AS3-550-25)	108-9235
TINE-SOLID (AS3-550-3)	108-9236
TINE-SOLID (AS3-550-35)	108-9237
TINE-SLICING, 5/8 (AB3-500-62)	108-9238
TINE-QUAD (AE3-550-4)	108-9290
TINE-QUAD (AE3-450-5)	108-9293
TINE-CROSS, CARBIDE	112-1310
TINE-CROSS, CARBIDE	112-1311
TINE-QUAD (500-3)	137-6526

Attachments and Accessories (continued)

TINE-QUAD (500-4) 137-6527
TINE-QUAD (500-5) 137-6529
TINE-QUAD (500-2) 138-5937

For 09737 Tine Heads ProCore Aerator

Product Name	Model/Part
TINE-SIDE EJECT, 5MM X 4.38	108-9104
TINE-SIDE EJECT, 6MM X 4.00	108-9105
TINE-QUAD (AE3-450-4)	108-9106
TINE-QUAD, CARBIDE (CE3-450-2)	108-9112
TINE-QUAD, CARBIDE (CE3-450-3)	108-9114
TINE-QUAD, CARBIDE (CE3-450-4)	108-9116
TINE-QUAD, CARBIDE (CE3-500-2)	108-9120
TINE-QUAD, CARBIDE (CE3-500-3)	108-9122
TINE-QUAD, CARBIDE (CE3-500-4)	108-9124
TINE-CROSS, 3/8 (AX3-450-37)	108-9215
TINE-CROSS, 1/2 (AX3-450-5)	108-9216
TINE-CROSS, 5/8 (AX3-450-62)	108-9217
TINE-CROSS, 3/8 (AX3-550-37)	108-9218
TINE-CROSS, 1/2 (AX3-550-5)	108-9219
TINE-CROSS, 5/8 (AX3-550-62)	108-9220
TINE-SOLID (AS3-450-2)	108-9230
TINE-SOLID (AS3-450-25)	108-9231
TINE-SOLID (AS3-450-3)	108-9232
TINE-SOLID, 3/8 X 5.00	108-9233
TINE-SOLID (AS3-550-2)	108-9234
TINE-SOLID (AS3-550-25)	108-9235
TINE-SOLID (AS3-550-3)	108-9236
TINE-SOLID (AS3-550-35)	108-9237
TINE-SLICING, 5/8 (AB3-500-62)	108-9238
TINE-QUAD (AE3-550-4)	108-9290
TINE-QUAD (AE3-450-5)	108-9293
TINE-CROSS, CARBIDE	112-1310
TINE-CROSS, CARBIDE	112-1311
TINE-QUAD (500-3)	137-6526
TINE-QUAD (500-4)	137-6527
TINE-QUAD (500-5)	137-6529
TINE-QUAD (500-2)	138-5937

For 09739 Tine Heads ProCore Aerator

Product Name	Model/Part
TINE-NEEDLE, 5MM X 6.43	100-3620
TINE-NEEDLE, 8MM X 7.38	100-3621
TINE-NEEDLE, 5MM X 5.43	125-3319

Attachments and Accessories (continued)

For 09794 Tine Heads ProCore Aerator

Product Name	Model/Part
TINE-HOLLOW, 5/8 X 5.75	104-0984
TINE-SIDE EJECT, HD 3/4 X 5.75	104-9875
TINE-SIDE EJECT, HD 5/8 X 5.75	104-9876
TINE-HOLLOW, 1/2 X 6.50	105-1180
TINE-HOLLOW, 3/8 X 4.75	108-9128
TINE-HOLLOW (AH6-475-4)	108-9129
TINE-HOLLOW, LW 5/8 X 4.75	108-9130
TINE-HOLLOW (AH6-575-3)	108-9132
TINE-HOLLOW, 1/2 X 5.50	108-9133
TINE-HOLLOW (AH6-575-5)	108-9134
TINE-HOLLOW, CARBIDE (CH6-650-3)	108-9135
TINE-HOLLOW (AH6-650-4)	108-9136
TINE-HOLLOW (AH6-650-5)	108-9137
TINE-HOLLOW (AH6-650-3)	108-9138
TINE-HOLLOW, CARBIDE (CH6-475-3)	108-9139
TINE-HOLLOW, CARBIDE (CH6-475-4)	108-9141
TINE-HOLLOW, CARBIDE (CH6-475-5)	108-9143
TINE-HOLLOW, CARBIDE (CH6-575-3)	108-9145
TINE-HOLLOW, CARBIDE (CH6-575-4)	108-9147
TINE-HOLLOW, CARBIDE (CH6-575-5)	108-9149
TINE-HOLLOW, CARBIDE (CH6-650-4)	108-9151
TINE-HOLLOW, CARBIDE (CH6-650-5)	108-9153
TINE-SIDE EJECT (AE6-475-3)	108-9159
TINE-SIDE EJECT (AE6-475-4)	108-9160
TINE-SIDE EJECT (AE6-475-5)	108-9161
TINE-SIDE EJECT (AE6-650-3)	108-9162
TINE-SIDE EJECT (AE6-575-3)	108-9163
TINE-SIDE EJECT (AE6-575-4)	108-9164
TINE-SIDE EJECT (AE6-575-5)	108-9165
TINE-SIDE EJECT, CARBIDE (CE6-650-3)	108-9166
TINE-SIDE EJECT, 1/2 X 6.50	108-9167
TINE-SIDE EJECT, 5/8 X 6.50	108-9168
TINE-SIDE EJECT, CARBIDE (CE6-475-3)	108-9170
TINE-SIDE EJECT, CARBIDE (CE6-475-4)	108-9172
TINE-SIDE EJECT, CARBIDE (CE6-475-5)	108-9174
TINE-SIDE EJECT, CARBIDE (CE6-575-3)	108-9176
TINE-SIDE EJECT, CARBIDE (CE6-575-4)	108-9178
TINE-SIDE EJECT, CARBIDE (CE6-575-5)	108-9180
TINE-SIDE EJECT, CARBIDE (CE6-650-4)	108-9182
TINE-SIDE EJECT, CARBIDE (CE6-650-5)	108-9184
TINE-SOLID (AS6-450-25)	108-9198
TINE-SOLID (AS6-450-3)	108-9199
TINE-SOLID (AS6-450-35)	108-9200
TINE-SOLID (AS6-450-4)	108-9201
TINE-SOLID (AS6-450-5)	108-9202
TINE-SOLID (AS6-450-6)	108-9203

Attachments and Accessories (continued)

TINE-SOLID (AS6-550-25) 108-9204
TINE-SOLID (AS6-550-3) 108-9205
TINE-SOLID (AS6-550-35) 108-9206
TINE-SOLID (AS6-550-4) 108-9207
TINE-SOLID (AS6-550-5) 108-9208
TINE-SOLID (AS6-550-6) 108-9209
TINE-SOLID (AS6-650-3) 108-9210
TINE-SOLID, 9MM X 5.50 108-9211
TINE-SOLID, 11MM 108-9212
TINE-SOLID, 13MM X 6.38 108-9213
TINE-SOLID, 16MM X 6.38 108-9214
TINE-CROSS, 1/2 (AX6-450-5) 108-9221
TINE-CROSS, 5/8 (AX6-450-62) 108-9222
TINE-CROSS, 3/4 (AX6-450-75) 108-9223
TINE-CROSS, 1/2 (AX6-550-5) 108-9224
TINE-CROSS, 3/4 (AX6-550-75) 108-9226
TINE-CROSS, 1/2 (AX6-650-5) 108-9227
TINE-CROSS, 5/8 (AX6-650-62) 108-9228
TINE-CROSS, 3/4 (AX6-650-75) 108-9229
TINE-SLICING, 3/4 (AB6-450-75) 108-9239
TINE-SLICING, 3/4 (AB6-550-75) 108-9240
TINE-SLICING, 3/4 (AB6-650-75) 108-9241
TINE-SOLID, ROUND (550-75) 108-9244
TINE-SOLID, ROUND (650-75) 108-9245
TINE-HD 3/4 MT (575-5) 108-9260
TINE-HD 3/4 MT (575-6) 108-9261
TINE-CROSS, CARBIDE 112-1313
TINE-CROSS, CARBIDE 112-1314
TINE-FAIRWAY, SPLIT (GF6-575-6) 112-5122
TINE-HOLLOW 114-0550
TINE-HOLLOW 114-0551
TINE-HOLLOW, CARBIDE 114-0553
TINE-SD EJECT 114-0555
TINE-SD EJECT, CARBIDE 114-0557
TINE-SD EJECT 114-0558
TINE-SD EJECT, CARBIDE 114-0560
TINE-HOLLOW, CARBIDE 114-0561
TINE-HOLLOW, 5/8 X 4.75 59-3670
TINE-HOLLOW, 1/2 X 4.75 66-9140

For 09796 Tine Heads ProCore Aerator

Product Name **Model/Part**

TINE-HOLLOW, 5/8 X 5.75 104-0984
TINE-SIDE EJECT, HD 3/4 X 5.75 104-9875
TINE-SIDE EJECT, HD 5/8 X 5.75 104-9876
TINE-HOLLOW, 1/2 X 6.50 105-1180
TINE-HOLLOW, 3/8 X 4.75 108-9128
TINE-HOLLOW (AH6-475-4) 108-9129

Attachments and Accessories (continued)

TINE-HOLLOW, LW 5/8 X 4.75 108-9130
TINE-HOLLOW (AH6-575-3) 108-9132
TINE-HOLLOW, 1/2 X 5.50 108-9133
TINE-HOLLOW (AH6-575-5) 108-9134
TINE-HOLLOW, CARBIDE (CH6-650-3) 108-9135
TINE-HOLLOW (AH6-650-4) 108-9136
TINE-HOLLOW (AH6-650-5) 108-9137
TINE-HOLLOW (AH6-650-3) 108-9138
TINE-HOLLOW, CARBIDE (CH6-475-3) 108-9139
TINE-HOLLOW, CARBIDE (CH6-475-4) 108-9141
TINE-HOLLOW, CARBIDE (CH6-475-5) 108-9143
TINE-HOLLOW, CARBIDE (CH6-575-3) 108-9145
TINE-HOLLOW, CARBIDE (CH6-575-4) 108-9147
TINE-HOLLOW, CARBIDE (CH6-575-5) 108-9149
TINE-HOLLOW, CARBIDE (CH6-650-4) 108-9151
TINE-HOLLOW, CARBIDE (CH6-650-5) 108-9153
TINE-SIDE EJECT (AE6-475-3) 108-9159
TINE-SIDE EJECT (AE6-475-4) 108-9160
TINE-SIDE EJECT (AE6-475-5) 108-9161
TINE-SIDE EJECT (AE6-650-3) 108-9162
TINE-SIDE EJECT (AE6-575-3) 108-9163
TINE-SIDE EJECT (AE6-575-4) 108-9164
TINE-SIDE EJECT (AE6-575-5) 108-9165
TINE-SIDE EJECT, CARBIDE (CE6-650-3) 108-9166
TINE-SIDE EJECT, 1/2 X 6.50 108-9167
TINE-SIDE EJECT, 5/8 X 6.50 108-9168
TINE-SIDE EJECT, CARBIDE (CE6-475-3) 108-9170
TINE-SIDE EJECT, CARBIDE (CE6-475-4) 108-9172
TINE-SIDE EJECT, CARBIDE (CE6-475-5) 108-9174
TINE-SIDE EJECT, CARBIDE (CE6-575-3) 108-9176
TINE-SIDE EJECT, CARBIDE (CE6-575-4) 108-9178
TINE-SIDE EJECT, CARBIDE (CE6-575-5) 108-9180
TINE-SIDE EJECT, CARBIDE (CE6-650-4) 108-9182
TINE-SIDE EJECT, CARBIDE (CE6-650-5) 108-9184
TINE-SOLID (AS6-450-25) 108-9198
TINE-SOLID (AS6-450-3) 108-9199
TINE-SOLID (AS6-450-35) 108-9200
TINE-SOLID (AS6-450-4) 108-9201
TINE-SOLID (AS6-450-5) 108-9202
TINE-SOLID (AS6-450-6) 108-9203
TINE-SOLID (AS6-550-25) 108-9204
TINE-SOLID (AS6-550-3) 108-9205
TINE-SOLID (AS6-550-35) 108-9206
TINE-SOLID (AS6-550-4) 108-9207
TINE-SOLID (AS6-550-5) 108-9208
TINE-SOLID (AS6-550-6) 108-9209
TINE-SOLID (AS6-650-3) 108-9210
TINE-SOLID, 9MM X 5.50 108-9211
TINE-SOLID, 11MM 108-9212

Attachments and Accessories (continued)

TINE-SOLID, 13MM X 6.38 108-9213
TINE-SOLID, 16MM X 6.38 108-9214
TINE-CROSS, 1/2 (AX6-450-5) 108-9221
TINE-CROSS, 5/8 (AX6-450-62) 108-9222
TINE-CROSS, 3/4 (AX6-450-75) 108-9223
TINE-CROSS, 1/2 (AX6-550-5) 108-9224
TINE-CROSS, 3/4 (AX6-550-75) 108-9226
TINE-CROSS, 1/2 (AX6-650-5) 108-9227
TINE-CROSS, 5/8 (AX6-650-62) 108-9228
TINE-CROSS, 3/4 (AX6-650-75) 108-9229
TINE-SLICING, 3/4 (AB6-450-75) 108-9239
TINE-SLICING, 3/4 (AB6-550-75) 108-9240
TINE-SLICING, 3/4 (AB6-650-75) 108-9241
TINE-SOLID, ROUND (550-75) 108-9244
TINE-SOLID, ROUND (650-75) 108-9245
TINE-HD 3/4 MT (575-5) 108-9260
TINE-HD 3/4 MT (575-6) 108-9261
TINE-CROSS, CARBIDE 112-1313
TINE-CROSS, CARBIDE 112-1314
TINE-FAIRWAY, SPLIT (GF6-575-6) 112-5122
TINE-HOLLOW 114-0550
TINE-HOLLOW 114-0551
TINE-HOLLOW, CARBIDE 114-0553
TINE-SD EJECT 114-0555
TINE-SD EJECT, CARBIDE 114-0557
TINE-SD EJECT 114-0558
TINE-SD EJECT, CARBIDE 114-0560
TINE-HOLLOW, CARBIDE 114-0561
TINE-HOLLOW, 5/8 X 4.75 59-3670
TINE-HOLLOW, 1/2 X 4.75 66-9140

For 09797 Tine Heads ProCore Aerator

Product Name **Model/Part**

TINE-SIDE EJECT, 7/8 X 5.75 104-9877
TINE-SD EJECT, CARBIDE (CE7-475-5) 108-9186
TINE-SD EJECT, CARBIDE (CE7-575-5) 108-9188
TINE-HOLLOW (AH7-475-5) 108-9190
TINE-HOLLOW (AH7-475-6) 108-9191
TINE-HOLLOW, (AH7-575-5) 108-9192
TINE-HOLLOW, (AH7-575-6) 108-9193
TINE-SIDE EJECT (AE7-475-5) 108-9194
TINE-SIDE EJECT (AE7-475-6) 108-9195
TINE-SIDE EJECT (AE7-575-5) 108-9196
TINE-SIDE EJECT (AE7-575-6) 108-9197
TINE-SLICING, HD (550-75) 108-9242
TINE-SLICING, HD (650-75) 108-9243
TINE-SOLID, ROUND (550-75) 108-9246
TINE-SOLID, ROUND (550-88) 108-9247

Attachments and Accessories (continued)

TINE-SOLID, ROUND (650-75) 108-9248
TINE-SOLID, ROUND (650-88) 108-9249
TINE-CROSS (550-88) 108-9259
TINE-HD 7/8 MT (575-6) 108-9264
TINE-HD 7/8 MT (575-7) 108-9265
TINE-FAIRWAY, SPLIT (GF7-575-6) 112-5121
TINE-FAIRWAY, SPLIT (GF7-575-7) 112-5123
TINE-HOLLOW, 3/4 X 4.75 62-4600
TINE-HOLLOW, 3/4 X 5.75 86-9720
TINE-SIDE EJECT, 3/4 X 5.75 92-7900

Notes:

Notes:

Notes:



Count on it.