FORM NO. 95-2137 REV. C

TORO®

Model No. 41030

SET-UP AND PARTS LIST

ELECTRIC BOOM LIFT KIT

Refer to the illustrated Parts List for the details of parts used in assembling the Electric Boom Lift Kit.

NOTE: "Right" and "Left" as used in the following instructions, refer to the operator's right and left when seated in the normal operating position. Likewise, "Front" and "Rear" as seen from the operator's position.

1. If the Struts have been installed, (for use with a Manual Boom Frame) disassemble them and use the clevis pins and hair pin cotters to install the Electric Actuators as shown in FIG. 1.

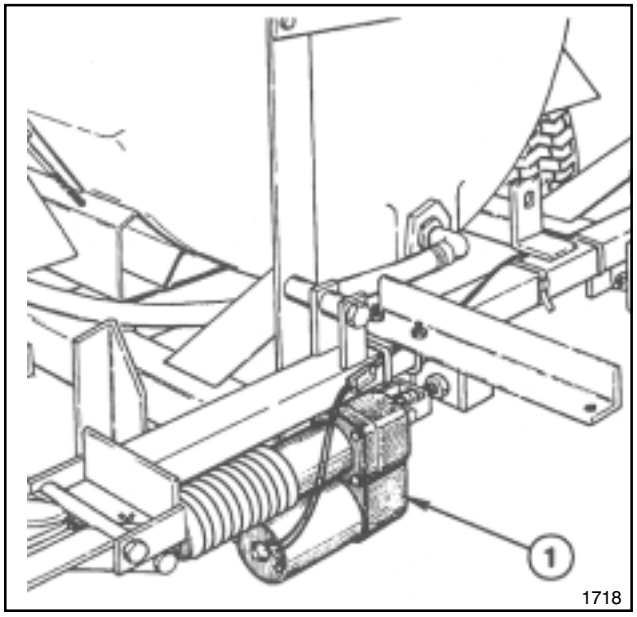

FIG. 1

1. Left Actuator

Multi Pro® 1100 Installation:

2. Connect the harness connectors to the Switches as shown in the diagram on page 4. Install the Switches in the holes in the Seat Support, using the nuts included with the Switches. Install the protective rubber Boots. Apply the "UP/DOWN" Decal between the Switches as shown in FIG. 2.

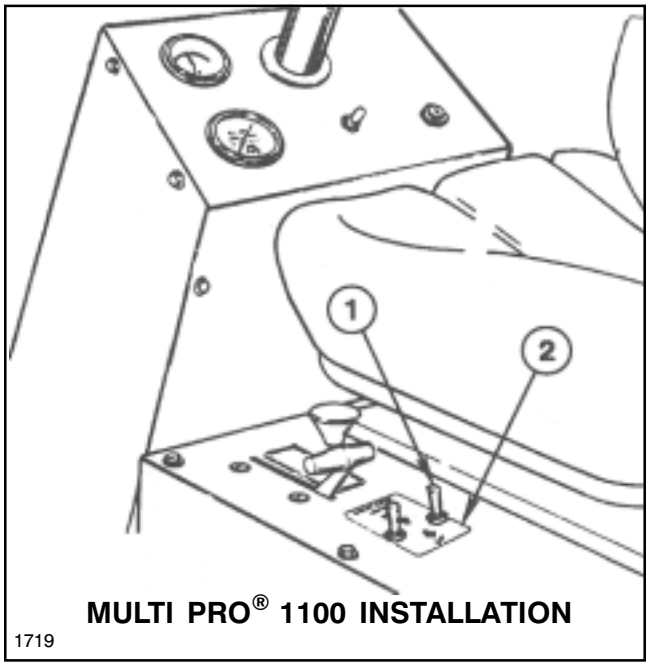

FIG. 2

1. Boom Switches
2. Decal

©The TORO Company - 2002
All Rights Reserved

Multi Pro® 5500 Installation:

2. Remove Switch Panel Assembly from Center Console. Connect the harness connectors to switches as shown on page 4. Route switches through foam block in center console and install into holes in plate. See FIG. 3.

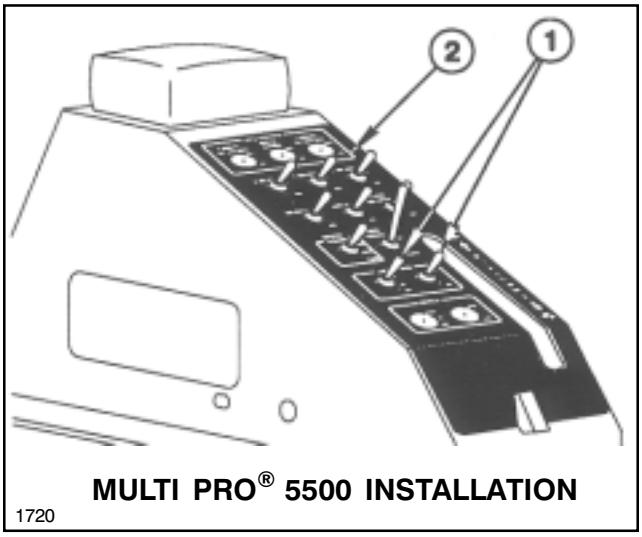

FIG. 3

1. Boom Switches
2. Decal

Multi Pro® 5600 Installation:

2. Remove Throttle Knob and unfasten Swell Latch to allow removal of the Switch Panel ASM from the Center Console. Remove Boom Lift Hole Plugs (see decal for Boom Lift symbols). Insert Rocker Switches into Holes labeled Boom Lift. See FIG 4. Connect Harness six-way connectors labeled "Boom Lift Switch" to appropriate sides.

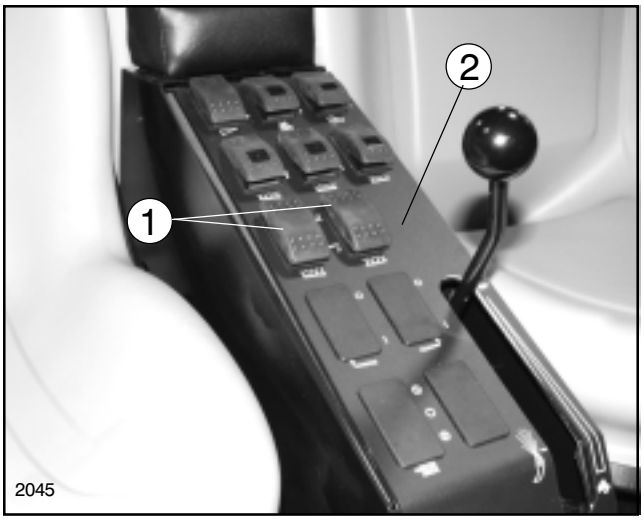

Multi Pro® 5600 INSTALLATION

FIG. 4

1. Boom Switches
2. Decal

Multi Pro® 1250 INSTALLATION:

2. To use the standard harness for the Electric Boom Lifts on the Multi Pro® 1250 the harness must be modified to mate with the two Rocker Switches provided. Refer to steps **a** thru **d** and illustrations for this procedure.

a. Place a piece of tape around each group of wires going to the two 6-way connectors to keep the two groups separated.

b. Remove the wires/terminals from the 6-way connectors using a small flat tip screw driver. Insert the tip of the screwdriver into a socket of the Connector from the side opposite of where the wires go in and on the side where the metal Tang of terminal locks into the connector. See FIG 5. Press the Tang back completely and pull the wire/terminal from the socket.

c. Repeat the removal of wires/terminals from the other sockets and from the other 6-way connector. After removing the terminals, lift the Tangs back up to their original height.

d. Install the terminals/wires into the sockets of the new Connector Housings, provided, as shown in FIG. 6, page 3. Places all the wires from one group into one Connector Housing and all the wires from other group into the other Connector Housing. Orientate the terminals as shown in FIG. 5, with the Tangs facing in the direction of the Locking Arm. Firmly press the terminals into the sockets.

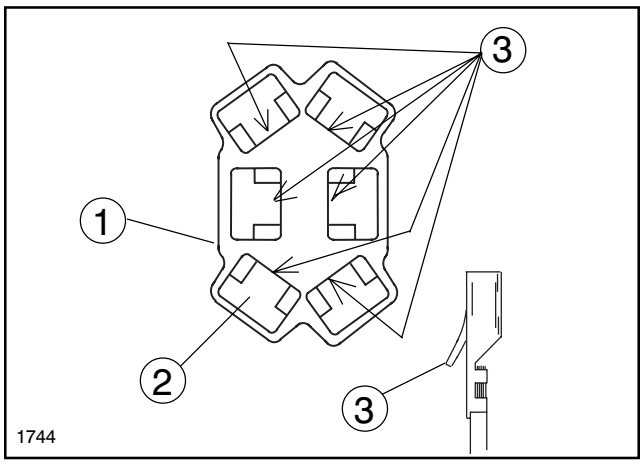

FIG. 5

1. Connector
2. Socket
3. Tang

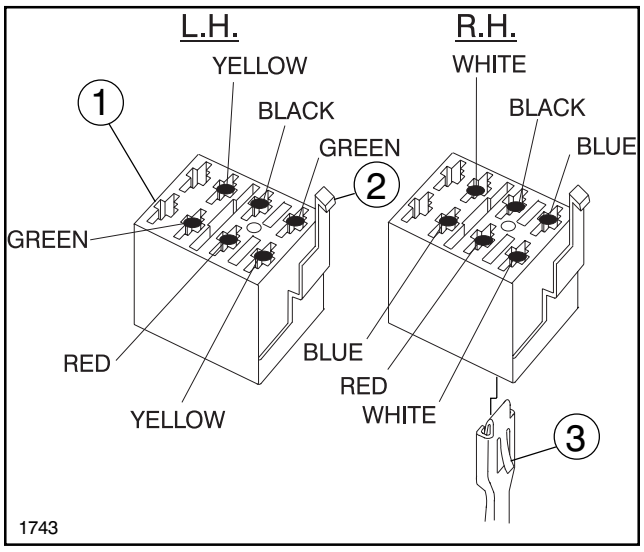

FIG. 6

1. Connector Housing
2. Locking Arm
3. Tang

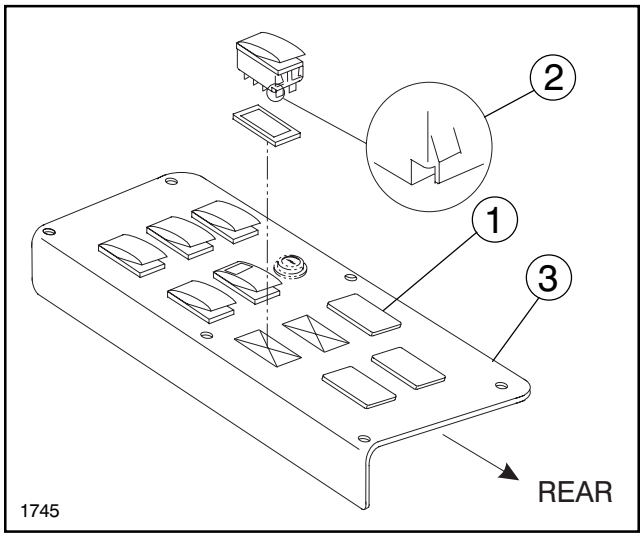

FIG. 7

1. Plug
2. Notch (at back)
3. Spray Control Panel

e. Lift and remove the two plugs from the Vehicle's Spray Control panel and install the two Rocker Switches provided in their place. Ensure their orientation matches the orientation shown in FIG. 7, with the cutout notch to the rear of the vehicle. This notch indicates the end of the switch to which the locking Arm will mate.

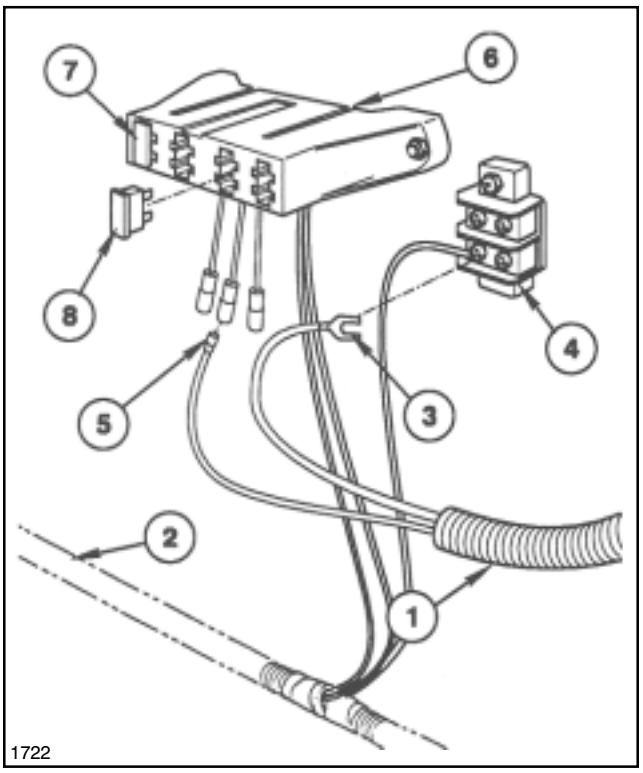

FIG. 8

1. Actuator Wire Harness
2. Vehicle Wire Harness
3. Spade Terminal
4. Ground Terminal Block
5. Push-On Terminal
6. Fuse Block
7. Main Fuse (30Amp)
8. Actuator Fuse (30Amp)

f. Remove the five screws and lift the Spray Control Panel to expose the bottom side.

g. From within the Seat Base compartment, route the Connector Housings through the two holes in the Right Hand Inner Fender Panel and up into the Console area.

h. Connect the Connector Housings to their respective switches in the Spray Control Panel (Green & Yellow to L.H. Switch & Blue & White to R.H. Switch).

i. Reinstall the Spray Control Panel to the Seat Base and secure with the five screws removed earlier.

WIRING DIAGRAM - FIG. 9

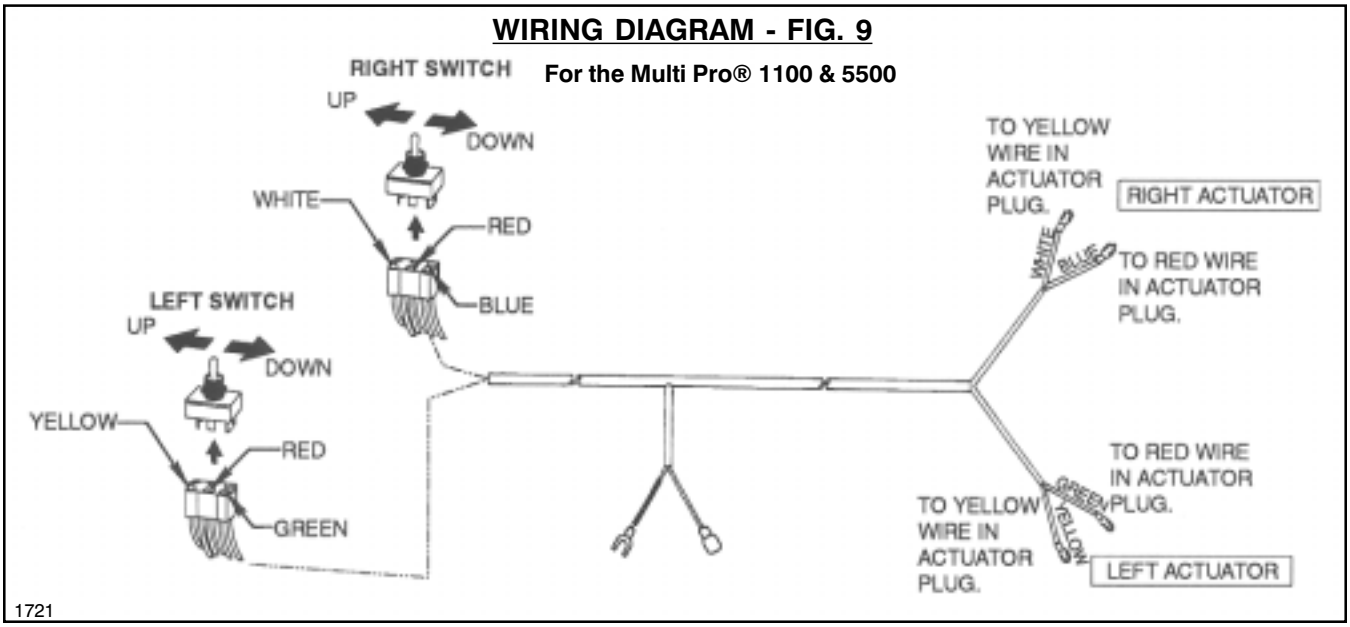

3. Run the wiring Harness along the left side of the Vehicle's Main Frame **(On Multi Pro® 5500, route through Wire Harness rings along right side of Vehicle Main Frame, and replace Switch Panel Assembly onto Center Console.**

3. FOR MULTI PRO® 5600 ONLY. Wiring Harness is already in place. Plug yellow and green connector into right actuator and orange and blue connector into left actuator. Continue with number 8, this page.

4. Ground the spade terminal on the black wire to the Terminal Block. See FIG. 9, page 4.

5. Connect the push-on terminal on the red wire to the male terminal on the red wire coming from the Fuse Block. See FIG. 8, page 3.

6. Make a trial connection by plugging single terminals into the Actuator plug, to check the up and down motion and the right and left control.

7. If all connections are correct, use the plastic Connector for final connection.

NOTE: Apply silicone at joint and on the back side of Plug where wires enter the plug.

8. Secure the Wire Harness to the Boom and Vehicle Frame with plastic cable ties.

IMPORTANT: Cover or otherwise protect the Electric Actuators when using a high pressure hose washer. Water entering the Actuator will cause SERIOUS DAMAGE and premature failure of the unit!

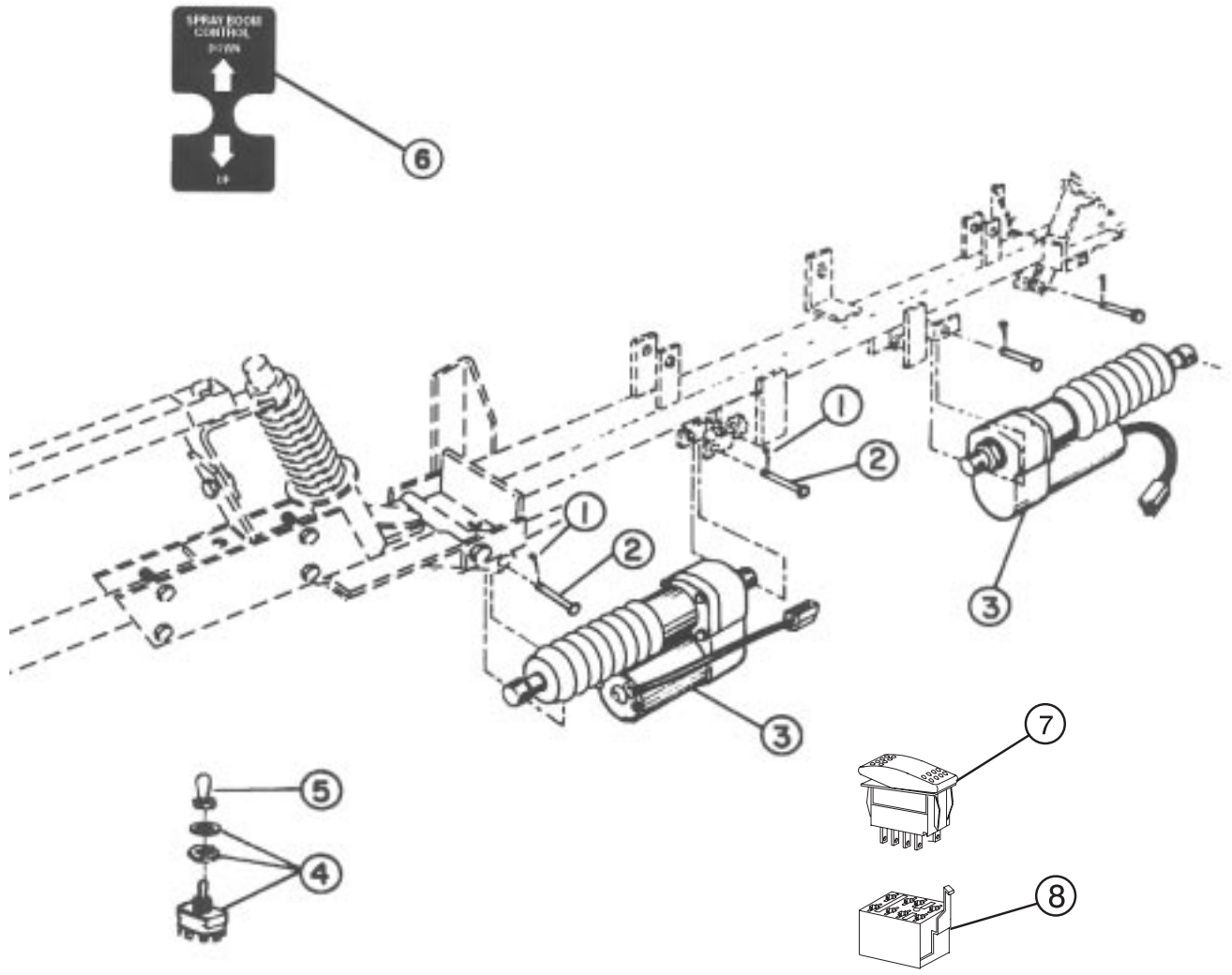

1723

ELECTRIC BOOM LIFT KIT

Ref.	Part No.	Description	Qty.
1	3272-11	Hair Pin Cotter, 1/8" x 1" (f/w Boom Frame)	4
2	42195	Clevis Pin, 1/2" x 2" (f/w Boom Frame)	4
3	92-3757	Actuator Assembly	2
4	30954	Switch (MP 1100 & 5500)	2
5	30955	Rubber Boot (MP 1100 & 5500)	2

Ref.	Part No.	Description	Qty.
6	87-0610	Decal (MP 1100)	1
7	100-8492	Rocker Switch (MP 1250 & 5600)	2
8	100-8591	Connector Body (MP 1250)	2
*	43063	Wire Harness Assembly (MP 1100, 1250, 5500)	1
*	42765	30 amp Fuse (MP 1100, 1250, 5500)	1
*	95672	Plastic Stay-Strap	4

* Not Illustrated

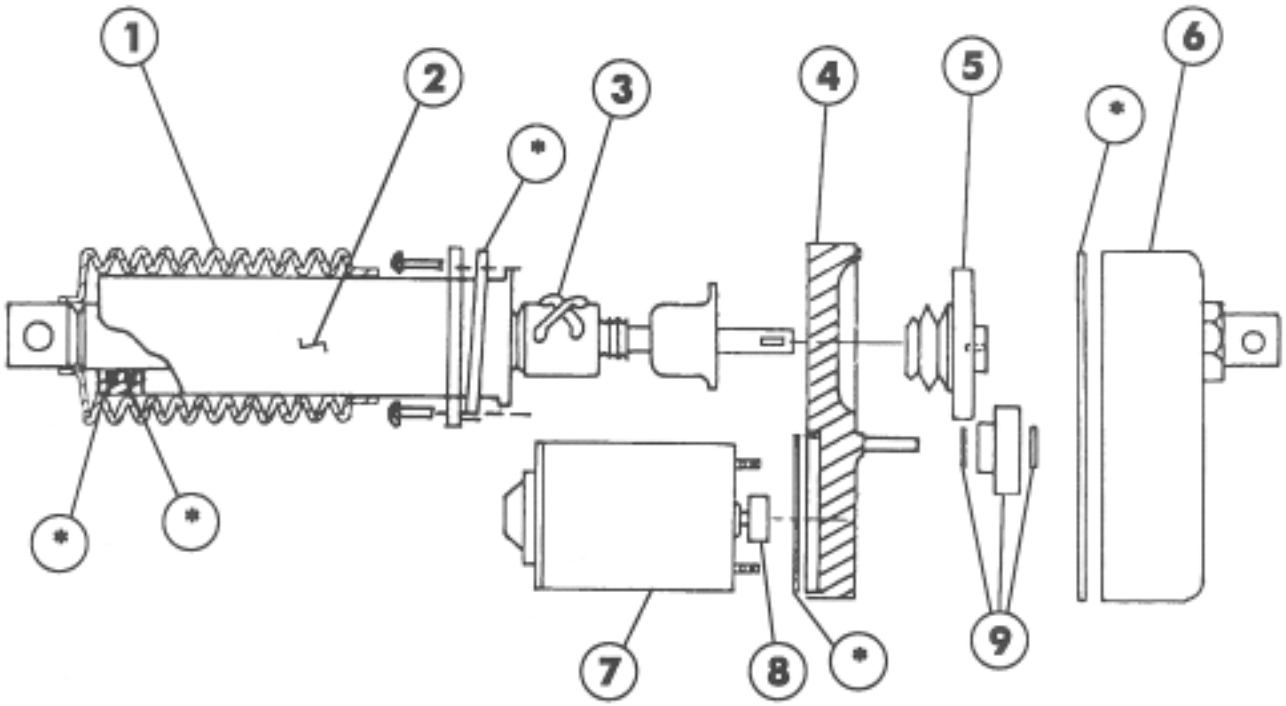

1724

(92-3757) ACTUATOR

Ref.	Part No.	Description	Qty.
1	92-3854	Boot Kit (includes clamps)	1
2	92-3850	Cover Tube	1
3	92-3853	Drive Screw Assembly	1
4	42850	Front Housing	1
5	92-3852	Clutch Assembly	1
6	92-3851	Rear Housing	1
7	42849	Motor	1
8	42852	Motor Pinion Gear	1
9	42846	Intermediate Gear	1
*	42851	Sealing Kit	AP

* Not Illustrated

NOTES:



Helping you put quality into play.®