FORM NO. 95-2267

TORO®

MODEL NO. 41566-70101

OPERATION, SET-UP & PARTS

ROPS

for the MULTI-PRO® 5500 VEHICLE

To assure maximum safety, optimum performance, and to gain knowledge of the product, it is essential that you or any other operator of this equipment read and understand the contents of this manual before the vehicle engine is ever started. Pay particular attention to the SAFETY INSTRUCTIONS highlighted by the triangular safety alert symbol.

The safety alert symbol means CAUTION, WARNING, or DANGER — personal safety instruction. Failure to comply with the instruction may result in personal injury.

SAFETY INSTRUCTIONS

Keep this Manual in the plastic tube behind the operator seat.

It is very important that all persons operating this equipment have easy access to these instructions at all times.

Carefully read and follow the Set-up Instructions that are provided with this equipment and the Safety Instructions in the MULTI PRO® 5500 Operator's Manual.

RECOGNIZE SAFETY INFORMATION This safety-alert symbol is used to call attention to a **dangerous** situation, which could result in serious injury or death to the operator or a bystander.

Safety, mechanical and some general information in this manual are emphasized. **DANGER, WARNING** and **CAUTION** identify safety messages. Whenever the triangular safety symbol appears, it is followed by a safety message that must be read and understood. For more details concerning safety, read the Safety Instructions that follow. **IMPORTANT** identifies special mechanical information and **NOTE** identifies general information worthy of special attention.

These instructions are provided as a guide for the safe operation and maintenance of this equipment. However, the operator's personal safety, as well as those persons in the work area, will depend on the careful actions and good judgement of the operator. **To reduce the potential for injury or death, comply with the following safety instructions.**

BEFORE OPERATING:

1. Operate the machine equipped with this ROPS only after reading and understanding the contents of this manual and the Multi-Pro® 5500 Operator's Manual. A replacement manual is available by sending complete model and serial number to: Hahn Equipment Co., A subsidiary of The Toro Company, 1625 N. Garvin, Evansville, IN 47711- 4596.

2. Keep all safety devices and decals in place. If a safety device or decal is malfunctioning, illegible or damaged, replace it before operating the machine.

3. It is mandatory to wear the seat belt at all times when operating the machine equipped with the ROPS system. (Always adjust and secure Seat Belt before operating the machine.)

4. Learn how to use the controls properly. Do NOT let anyone operate this equipment without first receiving thorough instructions.

5. Fasten your Seat Belt. Have Face Mask on.

6. Chemicals can injure persons, animals, plants, soils or other property. To eliminate environmental damage and personal injury:

A. Follow manufacturer's instructions on chemical container labels. Apply and handle chemicals as recommended.

©The TORO Company - 2002

B. Handle and apply chemicals with care. Wear goggles and other necessary protective equipment. Handle chemicals in well ventilated areas. Never smoke while handling chemicals.

C. Properly dispose of chemical container and unused chemicals.

7. Make certain everyone is clear of the machine and work site before starting the engine and beginning to spray.

WHILE OPERATING:

1. Since this attachment adds extra weight to the vehicle, drive the vehicle safely and cautiously to prevent loss of control and possible upset.

2. Gross vehicle weight has a major impact on your ability to stop and/or turn. Heavier loads and heavier attachments make a vehicle harder to stop and to turn.

3. The ROPS is equipped with a roll bar and seat belts. The ROPS system used on the vehicle will reduce the risk of serious or fatal injury in the unlikely event of a tipover, although the system cannot protect the operator from all possible injuries.

4. Replace a damaged ROPS, do not repair or revise. Any alteration of ROPS must be approved by the manufacturer.

5. Watch out for and avoid low overhangs such as tree limbs, overhead walkways, etc. Make sure there is enough room overhead to allow vehicle to pass under.

SEAT BELT OPERATION:

1. Pull the seat belt across lap and latch. Extend belt completely from retractor and adjust out slack.

WARNING

Non-locking retractor effective only when belt is fully extended.

An improperly latched seat belt could result in the operator being thrown from the vehicle.

Being thrown from a vehicle can result in serious injury or death.

Read and understand these instructions and charts, and all seat belt safety information presented here.

MAINTENANCE:

1. Before making any adjustments to the Seat Belt.

A. Stop the vehicle and engage the parking brake.

B. Shut off the vehicle's engine and remove the key from the switch.

C. Disengage all power and wait until all moving parts have stopped.

2. Keep all nuts, bolts, and other fasteners tightened to specifications. Replace any shields removed during servicing and adjustments.

TORQUE SPECIFICATION CHART

BOLT SIZE	TORQUE VALUE
3/8"	25 FT. LB.
7/16"	45 FT. LB.
5/8"	150 FT. LB.

3. To assure optimum performance and safety, always purchase genuine TORO replacement parts and accessories. Replacement parts and accessories made by other manufacturers could be dangerous. Altering this equipment in any manner may affect the machines operation, performance, and durability or its use may result in injury or death. Such use could void the product warranty of The TORO Company.

SAFETY AND INSTRUCTION DECALS

The following safety and instruction decals are installed on the ROPS. If any become damaged or illegible, replace them. Decals and part numbers are listed below and in the parts catalog. Order replacements from your Authorized Toro Distributor.

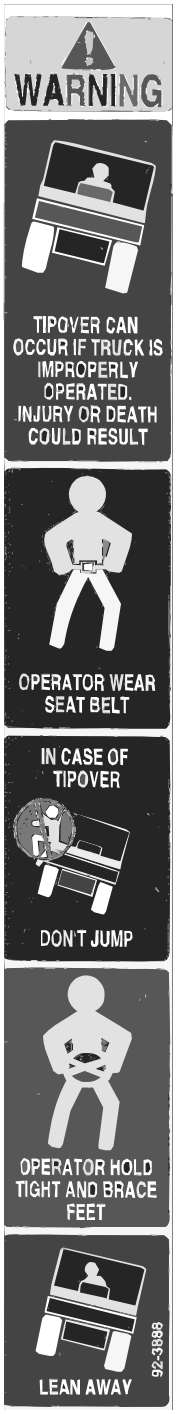

Part No. 92-3888: Located on the inside of Rear ROPS Bar - L.H.S.

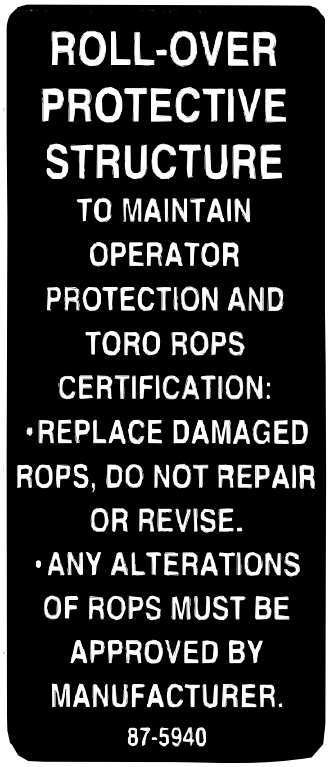

Part No. 87-5940: Located below Decal No. 92-3888.

SET-UP INSTRUCTIONS

Refer to the illustrated Parts List for the details of parts used in assembling the ROPS Kit.

NOTE: IF INSTALLING THE CAB, Model No. 41567 AT THIS TIME, REFER TO THE SET-UP INSTRUCTIONS PROVIDED WITH THAT KIT.

NOTE: "RIGHT", "LEFT", "FRONT", AND "REAR" ARE REFERENCED WHILE SEATED IN THE OPERATOR'S POSITION.

SEAT BELT:

1. Remove rear carriage bolt and nut securing L.H. Hip Restraint to rear of Seat Box Panel and DISCARD BOLT and SAVE NUT and FLAT WASHER for future use. Install Belt Support Strap under Seat Panel and L.H. Outside Belt Support on top of panel. Secure with (2) 5/16" x 3/4" carriage bolts and (2) flange locking nuts. Replace bolt removed earlier with 5/16" x 1" carriage bolt, use existing nut and flat washer, tighten securely. See FIG. 1.

2. Secure Seat Belt Buckle Ass'y to Outside Belt Support with (1) 7/16 " x 1 1/4" capscrew and 7/16" flange locking nut. See FIG. 1.

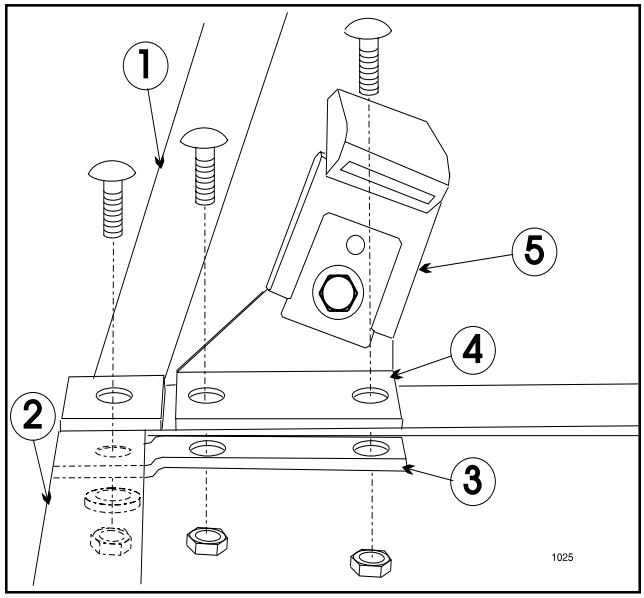

Figure 1

1. **L.H. Hip Restraint**
2. **Seat Box Panel**
3. **Seat Belt Support Strap**
4. **L.H. Outside Belt Support**
5. **Seat Belt Ass'y**

3. Remove lower rear mounting bolt and nut from L.H. Seat Box Panel and discard. Remove rear Center Console mounting bolt and flatwasher. Save for future use. Place inside L.H. Seat Belt Support on top of rear Seat Box Panel and along Center Console. See Fig. 2.

4. Align mounting holes and install 5/16" x 1" capscrew and flatwasher previously removed from rear of Center Console through Seat Belt Support.

5. Secure L.H. Seat Box Support to Seat Box Panel and Rops Mount with 7/16" x 1 1/4" capscrew, and a 7/16" flange locking nut. See FIG. 2.

- Align upper mounting hole of L.H. Seat Box Support under rear Seat Box Panel and with inside Seat Belt Support. Secure with 7/16" x 1 1/4" carriage bolt and 7/16" flange locking nut. See FIG. 2.

- Secure front of inside Seat Belt Support to Center Console with 5/16" x 3/4" carriage bolt and 5/16" flange locking nut. **TIGHTEN ALL HARDWARE SECURELY.**

6. Loosen Swell Latch and remove Switch Panel Assembly from Center Console Assembly.

7. Install Seat Belt Assembly to inside Belt Support using 7/16" x 1 1/4" carriage bolt and 7/16" flange locknut. **Note, the bolt will pass through the belt support and into the Center Console Assembly.** Tighten securely. See FIG. 2.

8. Repeat procedure for Seat Belt installation on right hand side of vehicle.

9. Reinstall Switch Panel Assembly.

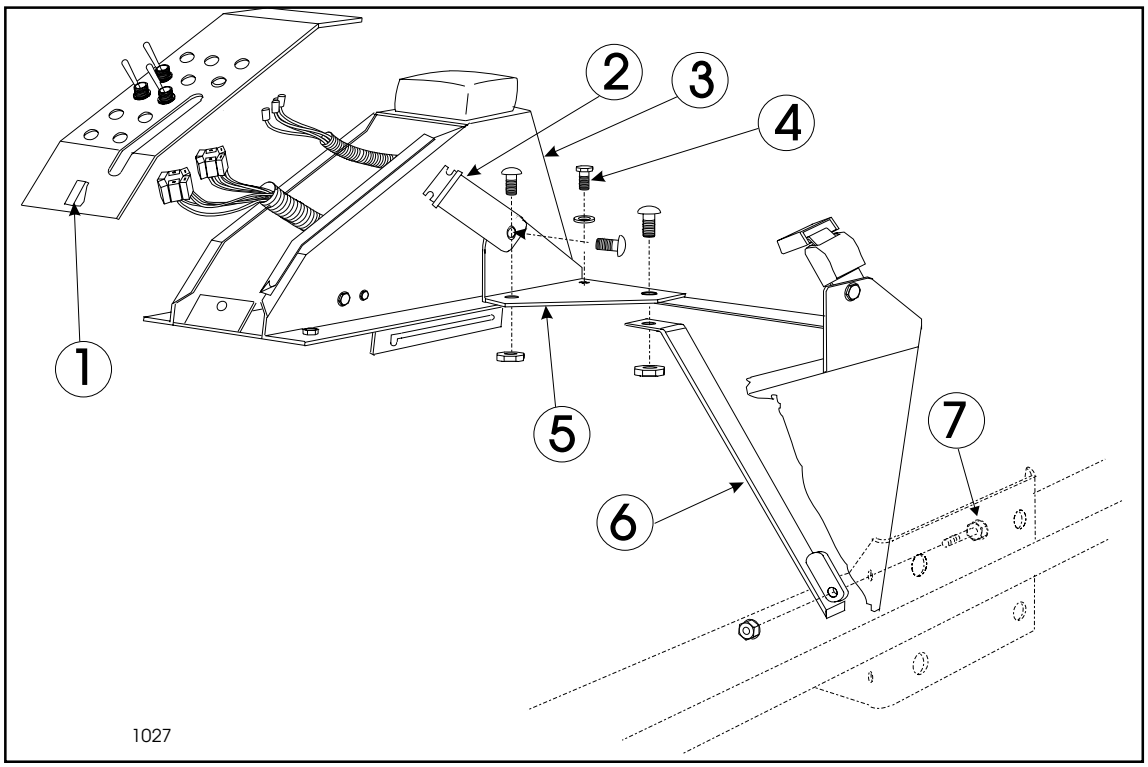

Figure 2

1. **Swell Latch**
2. **Seat Belt Assembly**
3. **Center Console**
4. **Rear Center Console Mounting Bolt**
5. **L.H. Inside Seat Belt Support**
6. **L.H. Seat Box Support**
7. **Lower Rear Mounting Bolt**

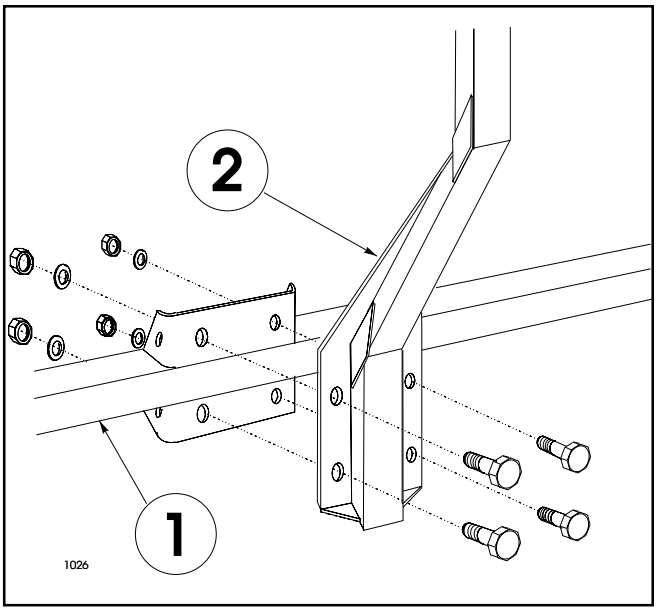

Figure 3

1. Vehicle Frame 2. ROPS Bar

ROPS BAR:

1. Mount the ROPS bar to the vehicle frame by inserting (8) 5/8" x 1 1/2" capscrews through the ROPS bar and vehicle frame. Add lockwashers and start nut on capscrews by hand. Use a torque wrench and torque nuts to 150 ft. lb. See FIG. 3.

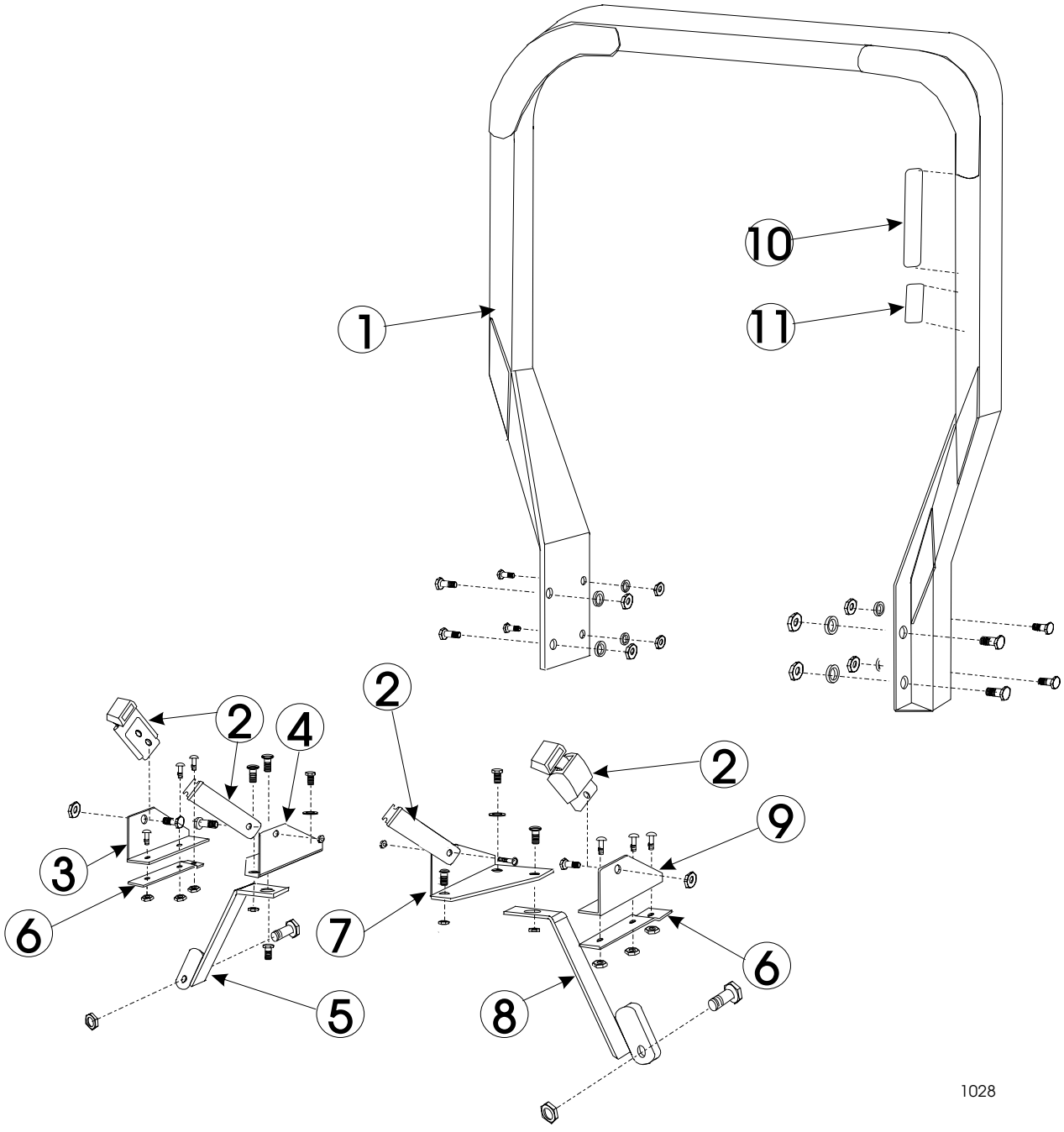

REFER TO REFERENCED PART LISTING FOR HARDWARE SHOWN.

PRODUCT CHANGES

In an effort to make improvements available to TORO owners as quickly as possible, minor changes are incorporated into Toro's Products from time to time that do not become immediately shown in the Parts Catalog. If such a change has been made in your unit which is not in your manual, see your TORO distributor or his Authorized TORO Service Dealer for information and part numbers.

REAR ROPS

#	Part No.	Description	Qty
1	95-2250	ROPS Bar ASM - Rear	1
	327-4	Cap Screw 5/8" x 1 1/2"	8
	3253-8	Lock Washer 5/8"	8
	3217-11	Hex Nut 5/8" UNC	8
*	92-3788	Insert Anchor - 3/8"	4
*	32148-6	Insert Anchor - 1/4"	14
2	21-4191	Seat Belt ASM	2
	324-5	Cap Screw 7/16" x 1 1/4"	2
	3232-2	Carriage Bolt 7/16" x 1 1/4"	2
	32128-37	Flange Locking Nut 7/16"	4
3	95-2263	Belt Support Outside Right Hand	1
	3230-1	Carriage Bolt 5/16" x 3/4"	2
	32128-44	Flange Locking Nut 5/16"	2
4	95-2261	Belt Support - Inside Right Hand	1
	3230-1	Carriage Bolt 5/16" x 3/4"	1
	32128-44	Flange Locking Nut 5/16"	1
	3232-2	Carriage Bolt 7/16" x 1 1/4"	1
	32128-37	Flange Lock Nut 7/16"	1

#	Part No.	Description	Qty
5	95-2259	Seat Box Support - Right Hand	1
	324-5	Cap Screw 7/16" x 1 1/4"	1
	32128-37	Flange Locking Nut 7/16"	1
6	95-2264	Strap - Belt Support	2
	3230-2	Carriage Bolt 5/16" x 1"	2
7	95-2260	Belt Support - Inside Left Hand	1
	3230-1	Carriage Bolt 5/16" x 3/4"	1
	32128-44	Flange Locking Nut 5/16"	1
	3232-2	Carriage Bolt 7/16" x 1 1/4"	1
	32128-37	Flange Locking Nut 7/16"	1
8	95-2256	Seat Box Support - Left Hand	1
	324-5	Cap Screw 7/16" x 1 1/4"	1
	32128-37	Flange Locking Nut 7/16"	1
9	95-2262	Belt Support - Outside Left Hand	1
	3230-1	Carriage Bolt 5/16" x 3/4"	2
	32128-44	Flange Locking Nut 5/16"	2
10	87-5940	Decal - ROPS Damage	1
11	92-3888	Decal - Warning ROPS	1

* Not Illustrated

The Toro Commercial Products Two Year Limited Warranty

The Toro Company warrants your 1996 or newer Toro Commercial Product ("Product") purchased after January 1, 1997, to be free from defects in materials or workmanship for the period of time listed below. Where a warrantable condition exists, Toro will repair the Product at no cost to you including diagnosis, labor, parts, and transportation. This warranty begins on the date the Product is delivered to the original retail purchaser.

Warranty Duration: Two years or 1500 operational hours*, whichever occurs first.
***Product equipped with hour meter**

Owner Responsibilities:

As the Product owner, you are responsible for required maintenance and adjustments stated in your Owner's Manual. Failure to perform required maintenance and adjustments can be grounds for disallowing a warranty claim.

Instructions for Obtaining Warranty Service:

You are responsible for notifying the Commercial Products Distributor or Authorized Commercial Products Dealer from whom you purchased the Product as soon as you believe a warrantable condition exists.

If you need help locating a Commercial Products Distributor or Authorized Dealer, or if you have questions regarding your warranty rights or responsibilities, you may contact us at:

TORO Commercial Products Service Department
8111 Lyndale Avenue South
Minneapolis, MN 55420-1196
Telephone: (612) 888-8801
Facsimile: (612) 887-8258
E-Mail: Commercial.Service@Toro.Com

Maintenance Parts:

Parts scheduled for replacement as required maintenance ("Maintenance Parts"), are warranted for the period of time up to the scheduled replacement time for that part.

Items/Conditions Not Covered:

Not all product failures or malfunctions that occur during the warranty period are defects in material or workmanship. The items / conditions listed below are not covered by this warranty:

- Product failures which result from the use of non-Toro replacement parts, or from installation and use of add-on, modified, or unapproved accessories are not covered.
- Product failures which result from failure to perform required maintenance and/or adjustments are not covered.
- Product failures which result from operating the Product in an abusive, negligent, or reckless manner are not covered.
- This warranty does not apply to parts subject to consumption through use unless found to be defective. Examples of parts which are consumed, or used up, during normal Product operation include, but are not limited to, blades, reels, bedknives, tines, spark plugs, castor wheels, tires, filters, belts, etc.
- This warranty does not apply to failures caused by outside influence. Items considered to be outside influence include, but are not limited to, weather, storage practices, contamination, use of unapproved coolants, lubricants, additives, or chemicals, etc.
- This warranty does not apply to normal "wear and tear" items. Normal "Wear and Tear" includes, but is not limited to, damage to seats due to wear or abrasion, worn painted surfaces, scratched decals or windows, etc.

Other Legal Disclaimers:

The above remedy of product defects through repair by an authorized distributor or dealer is the purchaser's sole remedy for any defect. This warranty gives you specific legal rights, and you may also have other rights which vary from state to state.

Except for the Emissions warranty referenced below, If applicable, there is no other express warranty. All implied warranties of merchantability and fitness for use are limited to the duration of the express warranty.

Some states do not allow limitations on how long an implied warranty lasts, so the above limitations may not apply to you.

The Toro Company is not liable for indirect, incidental or consequential damages in connection with the use of the Product, including any cost or expense of providing substitute Product or service during periods of malfunction or non-use.

Some states do not allow the exclusion of incidental or consequential damages, so the above exclusion may not apply to you.

Note to California residents: The Emissions Control System on your Product may be covered by a separate warranty meeting requirements established by the U.S. Environmental Protection Agency (EPA), or the California Air Resources Board (CARB). The hour limitations set forth above do not apply to the Emissions Control System Warranty. Refer to the California Emission Control Warranty Statement printed in your Owner's Manual or contained in the engine manufacturer's documentation for details.