FORM NO. 95-2455

TORO®

MODEL NO. 41552-60101 & UP

SET-UP AND PARTS LIST

PA-17 SPREADER MOUNTING KIT
FOR USE ON THE MULTI-PRO® 5500 VEHICLE

"Right" and "Left" as used in the following instructions refer to the operator's right or left when seated in the operating position. Likewise, "front" and "rear" as seen from the operator's position.

1. Use lacquer thinner to remove the rust preventive coating from the Spreader's input shaft and keyway.

2. Loose-assemble the Adjusting Lug to the upright lugs on the Spreader Frame Assembly, using two 5/8 x 2-1/2" cap screws, washers and hex nuts. **NOTE: Refer to the illustrated Parts List for details.**

3. Install the Spreader Unit onto the Spreader Frame Assembly. Align the 3-point hitch lugs with the Adjusting Lugs as shown in FIG. 1 and secure with two 5/8 x 2-1/2" cap screws, washers and hex nuts. DO NOT TIGHTEN FASTENERS.

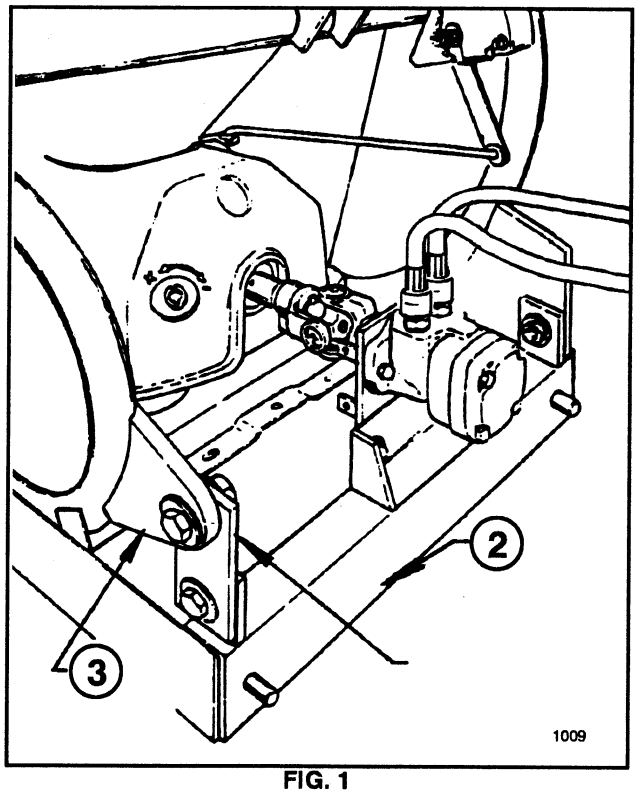

FIG. 1

1. Adjusting Lug
2. Spreader Frame Assembly
3. 3-Point Hitch Lug

4. Secure the rear of the Spreader Unit to the Spreader Frame Assembly with one 5/8 x 1-1/2" cap screws, washers and hex nut, as shown in FIG. 2. DO NOT TIGHTEN FASTENERS.

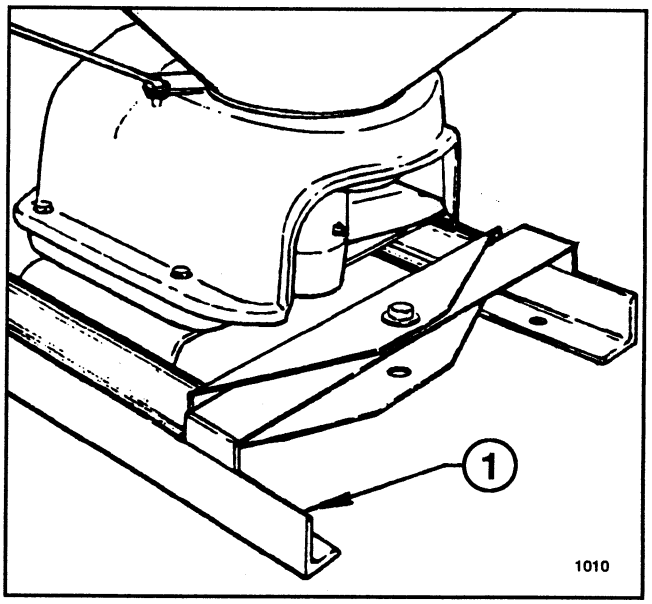

FIG. 2

1. Spreader Frame Assembly

5. After the Spreader unit is positioned firmly within the Frame Assembly and all fasteners are properly aligned with their respective holes... TIGHTEN ALL FASTENERS SECURELY.

6. Mount the Motor Mounting Plate to the Spreader Frame Assembly with two 1/2 x 1-1/2" cap screws, flat washers and lock nuts. DO NOT TIGHTEN FASTENERS.

7. Mount the Hydraulic Motor to the Mounting Plate with two 1/2 x 1-1/2" cap screws and lock nuts.

8. Join the two End Yokes and install one on the Spreader's input shaft and the other on the Hydraulic Motor's output shaft.

9. Visually check the alignment of the two shafts and adjust if necessary, by repositioning the Motor Mounting Plate. The two shafts must be in alignment from side to side, as well as up and down.

©The TORO Company - 1997
All Rights Reserved

IMPORTANT: SHAFT ALIGNMENT IS CRITICAL TO THE OPERATION OF THE SPREADER. FAILURE TO HAVE THE TWO SHAFTS IN ALIGNMENT WITH ONE ANOTHER WILL RESULT IN EXTENSIVE WEAR OR DAMAGE.

10. When alignment has been completed, tighten the Motor Mounting Plate fasteners securely.

11. Install the Universal Joint Cover on the Motor Mounting Plate with four 5/16 x 3/4" cap screws and washers.

⚠CAUTION

ROTATING PARTS CAN CAUSE SERIOUS INJURY.

- **Keep hands, feet and clothing clear while engine is running.**
- **Stop engine before servicing.**
- **Always keep Universal Joint Cover in place.**

12. Install the Spreader Mounting Frame on the MULTI-PRO Vehicle by inserting the front pins through the holes in the Vehicle Frame crossmember and securing it at the rear with two 5/8 x 1-1/2" cap screws, washers and hex nuts. TIGHTEN FASTENERS SECURELY.

HYDRAULIC HOSES:

NOTE: A pipe joint sealant, compatible with hydraulic oil must be applied to all threaded fittings. Teflon tape is not recommended.

1. Apply thread sealer to the close nipples and attach Quick Couplers to nipples as shown in Parts List illustration, page 3..

2. Apply thread sealer to other end of nipples and thread them into the Hydraulic Motor Ports as shown in Parts List illustration, page 3.

3. Make Hydraulic Hose connection from the Directional Valve to the Hydraulic Motor as shown in FIG. 3.

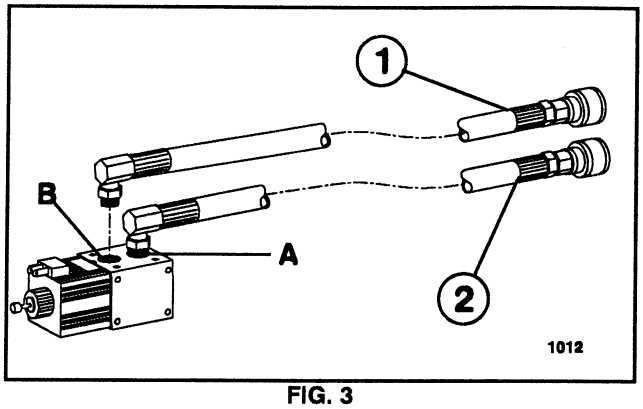

FIG. 3

1. Connect to R.H. Port of Hydraulic Motor.
2. Connect to L.H. Port of Hydraulic Motor.

NOTE: Hydraulic components must be kept as clean as possible during assembly operations.

4. Check the fluid level in the Hydraulic Reservoir, making sure it is at approximately two inches from the top. Replenish as necessary with Mobile 424 hydraulic fluid.

5. Operate the hydraulic system for several minutes to warm up. Check all connections for leaks.

OPERATION:

1. Use Pump Switch to activate the Spreader Motor. See FIG. 4.

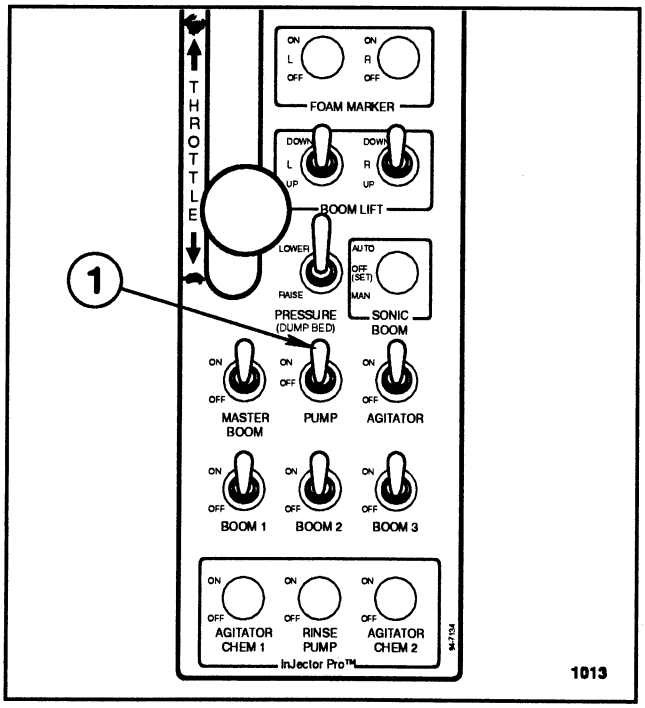

FIG. 4

1. Pump switch on Center Console.

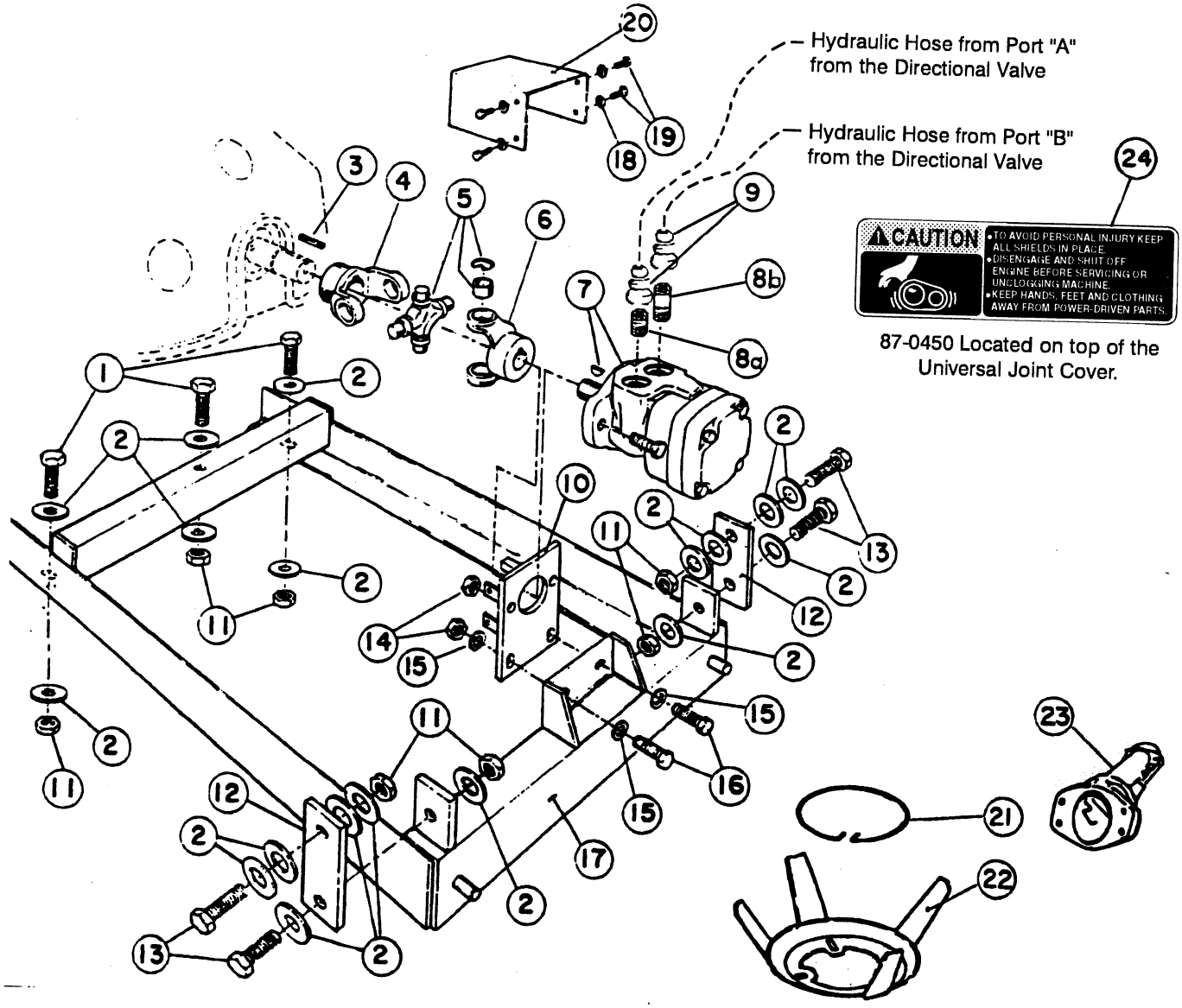

SPREADER MOUNTING KIT

Ref	Part No.	Description	Qty
1	20-121-AGD	HHCS, 5/8 NC x 1 1/2 (Grade 5)	3
2	24-15-AD	Flat Washer, 5/8 U.S.S.	18
3	314233	Square Key, 1/4 x 1-1/4	1
4	42552	End Yoke, 1-3/16"	1
5	42554	Journal & Bearing	1
6	42553	End Yoke, 1"	1
7	42549	Hydraulic Motor	1
	92-0427	Seal Kit	AR
8a	94-7157	Nipple, 1/2" x 3"	1
8b	41839	Close Nipple, 1/2" x 1 1/2"	1
9	41790	Hydraulic Quick Coupler, male	2
10	42556	Motor Mounting Plate Assy	1
11	22-17-AJD	Hex Nut, 5/8 NC	7

Ref	Part No.	Description	Qty
12	42545	Adjustment Lug	2
13	20-125-AGD	HHCS, 5/8 NC x 2-1/2" (Grade 5)	4
14	22-15-AJFD	Lock Nut, 1/2 NC	4
15	24-13-BD	Flat Washer, 1/2 S.A.E.	4
16	20-87-AGD	HHCS, 1/2 NC x 1-1/2" (Grade 5)	4
17	42535	Spreader Frame Assembly	1
18	24-10-BD	Flat Washer, 5/16 S.A.E.	4
19	20-24-AGD	HHCS, 5/16 x 3/4 (Grade 5)	4
20	42557	Universal Joint Cover	1
21	41579	Agitator Locking Ring	1
22	41578	Agitator Rim	1
23	41506	Sand Spout	1
24	87-0450	Decal	1



Helping you put quality into play.®