FORM NO. 95-2477

TORO

MODEL NO. 41020 & 41080

SET-UP AND PARTS

NOZZLE BODIES / BOOM SECTION
FOR USE ON ALL SPRAY SYSTEMS

NOTE: This information is for use in the placement of the latest nozzle body design, on the boom sections of all spray systems. Refer to the illustrated Parts List in your spray systems Set-up and Parts catalog for details of parts used in assembling your spray system. This change will be effective February 1, 1997.

SET-UP:
Center Boom

1. Loosely attach the triple barb Nozzle Body with the Nozzle Body Bracket Assembly in the approximate center of the Center Boom Pipe. For the most uniform spray coverage, position all Nozzle Assemblies at a 45 deg. angle as shown in Fig. 1 Tighten fasteners to secure the Nozzle Body to the Boom Pipe.

2. Loosely attach a single barb Nozzle Body with the Nozzle Body Bracket Assembly to each end of the Center Boom Pipe. Place two hose clamps on the two 3/4" x 19" jumper Hoses and connect the single barb Nozzles to the triple barb Nozzle. Tighten all fasteners securely.

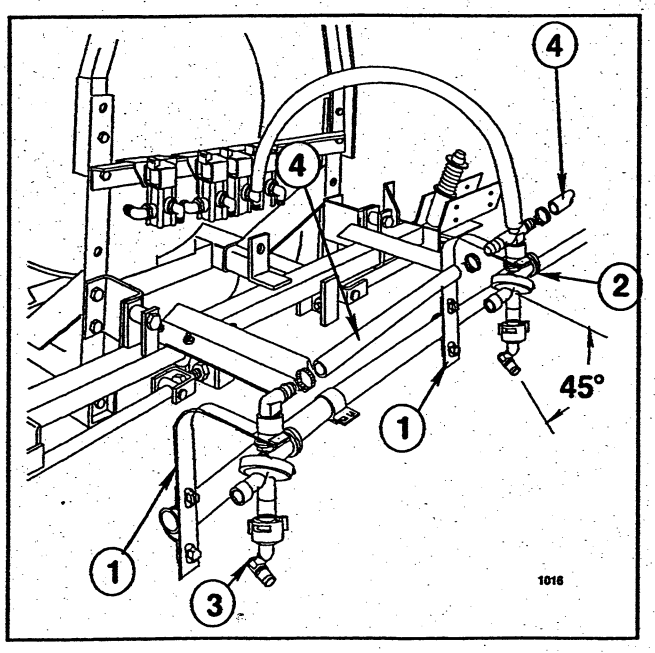

Figure 1

1. Nozzle Body Bracket Assembly
2. Triple Barb Nozzle
3. Single Barb Nozzle
4. Jumper Hose

Left or Right Boom

3. Attach three double barb and one single barb Nozzle Bodies with Nozzle Body Bracket Assemblies on each Extension Boom Pipe as shown in Fig. 2. Nozzles are to be spaced on 20" centers. Connect the Nozzle Assemblies with the 3/4" x 19" Jumper Hoses and 3/4" x 21" Jumper Hose. Secure with hose clamps.

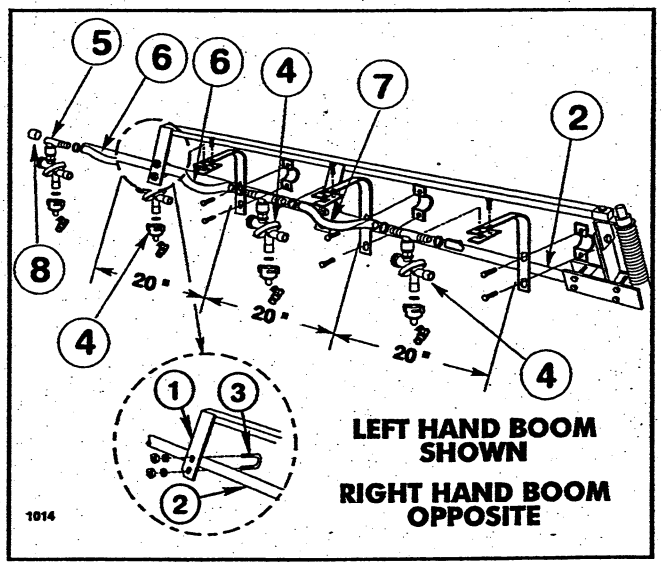

Figure 2

1. Boom Extension Assembly
2. Extension Boom Pipe
3. U-Bolt
4. Double Barb Nozzle
5. Single Barb Nozzle
6. Jumper Hose 3/4" x 19"
7. Jumper Hose 3/4" x 21"
8. Boom Cap

©The TORO Company - 1997
All Rights Reserved

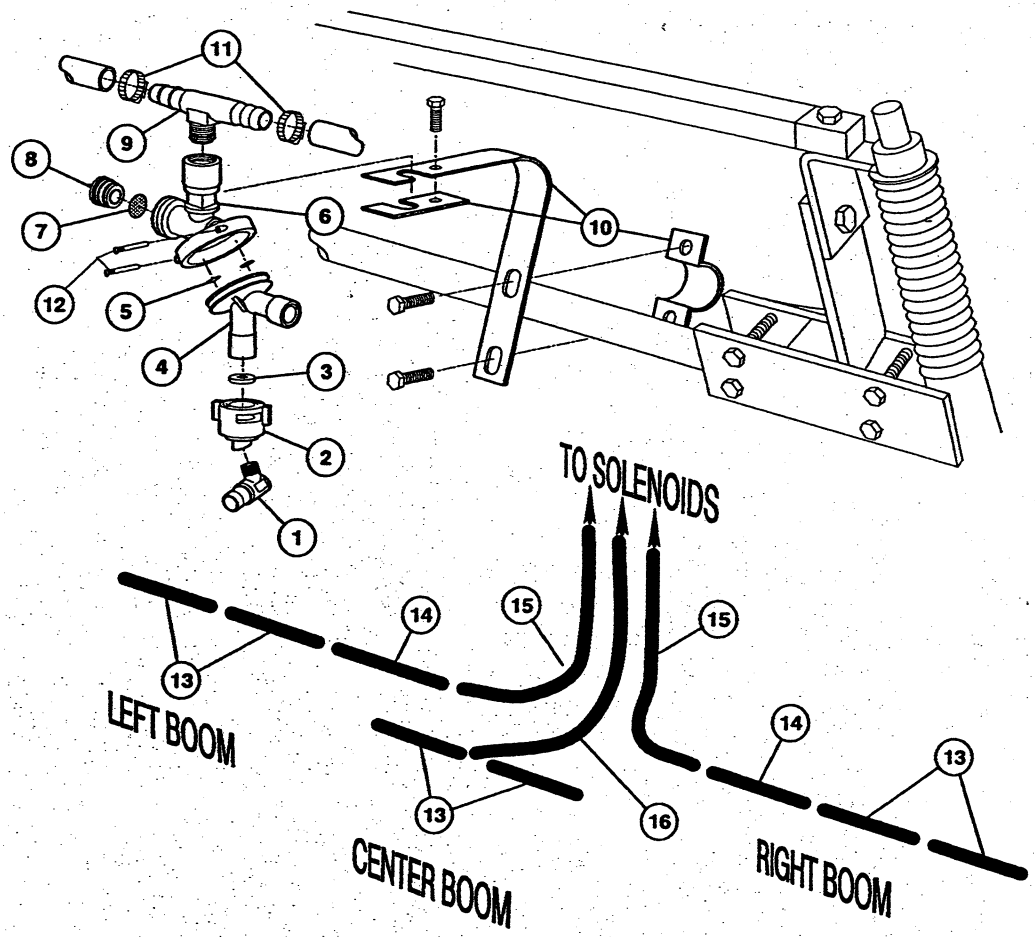

NOZZLE BODIES/BOOM HOSES

#	Part No.	Description	Qty
A	95-2216	Turret Nozzle Body Ass'y-Double Ref. # 4-9	6
*	95-2214	Turret Nozzle Body Ass'y-Single	4
*	95-2217	Turret Nozzle Body Ass'y-Triple	1
1	40444	Spray Nozzle, RA-10 Tan	11
*	93-6428	Spray Nozzle, RA-2 Yellow	
*	92-3977	Spray Nozzle, RA-4 Red	
*	43082	Spray Nozzle, RA-5 Brown	
*	41088	Spray Nozzle, RA-6 Gray	
*	42828	Spray Nozzle, RA-8 White	
*	92-0027	Spray Nozzle, RA-15 Lt. Blue	
*	93-0903	Spray Nozzle, RA-25 Black	

#	Part No.	Description	Qty
2	95-2228	Nozzle Cap, 45° 14 NPT	11
3	95-2227	Nozzle Cap Gasket	11
4	95-2225	Turret Nozzle	A/R
5	95-2226	O-Ring	A/R
6	95-2224	Turret Body	A/R
7	95-2223	Pressure Diaphram	A/R
8	95-2222	Diaphram Check Cap	A/R
9	95-2220	Nozzle Body Double Barb	A/R
*	95-2219	Nozzle Body Single Barb	A/R
*	95-2221	Nozzle Body Triple Barb	A/R
10	95-2218	Nozzle Body Bracket Ass'y	11
11	6350	Hose Clamp	19
12	95-2415	Screw, Turret Body	22
13	40506	Jumper Hose, 3/4" x 19"	9
14	95-2229	Jumper Hose, 3/4" x 21"	2
15	41340	Boom Hose, R & L, 3/4" x 50"	2
16	42274	Boom Hose, Center, 3/4" x 36"	1

* Not illustrated