FORM NO. 3312-191

TORO®

MODEL NO. 20680-3000001 & UP

PARTS CATALOG

21" S.P. REAR BAGGER

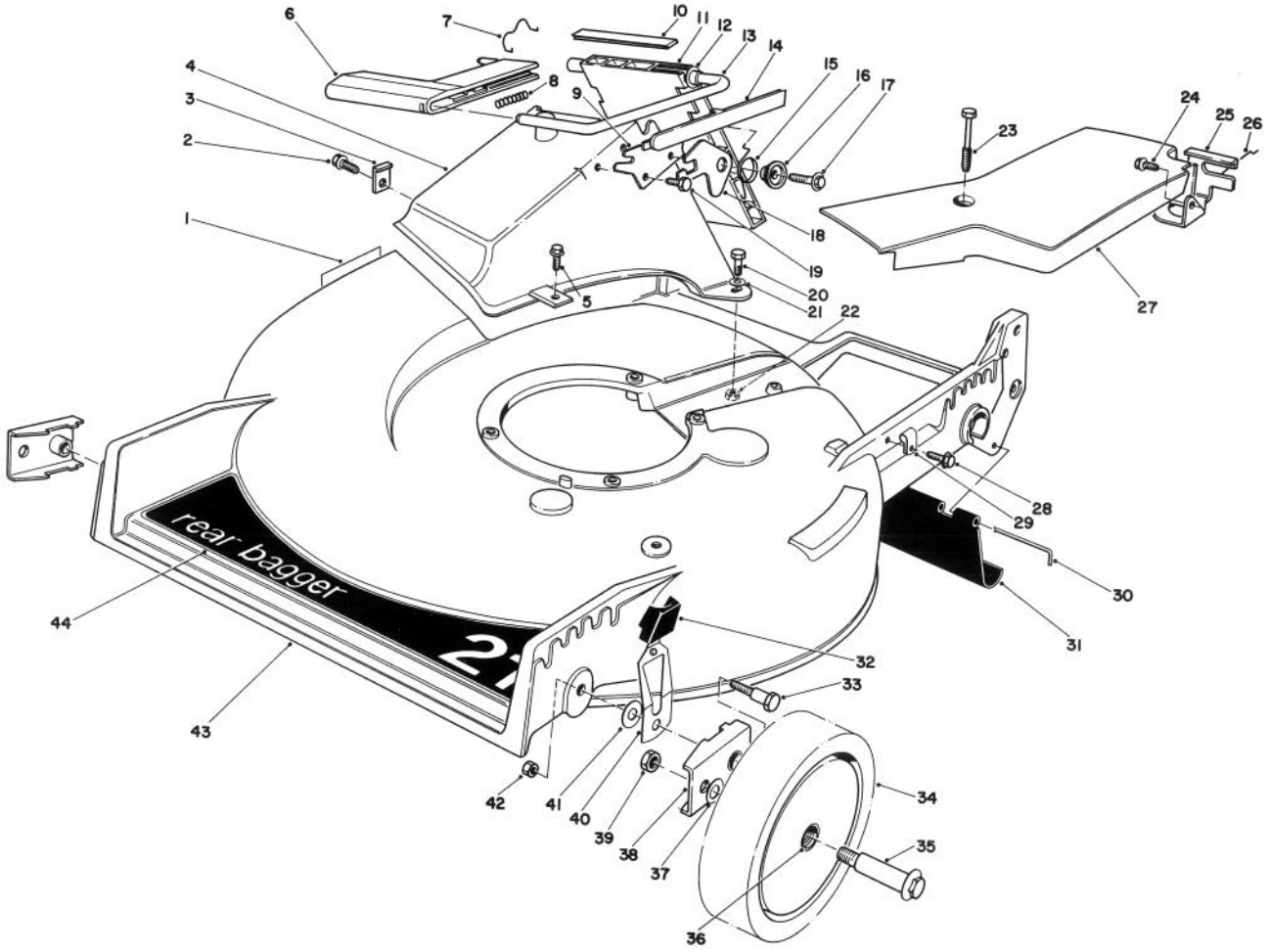

HOUSING ASSEMBLY

Ref. No.	Part No.	Description	No. Used
1	39-5770	Decal — Danger	1
2	12-3270	Screw — Thread Forming Hex Washer Hd.	1
3	47-6540	Clip — Tunnel	1
4	46-3500	Tunnel — Discharge	1
5	11-9760	Screw — Thread Forming Hex Washer Hd.	1
6	46-3520	Handle — Door	1
7	47-5840	Door — Retainer	1
8	46-7060	Spring — Compression	1
9	23-1040	Plate — Latch	1
10	46-6820	Cover — Door	1
11	46-3510	Door — Discharge	1
12	23-0880	Bushing	1
13	46-3530	Rod — Door	1

Ref. No.	Part No.	Description	No. Used
14	46-7050	Cover — Handle	1
15	33-4860	Spring — Torsion	1
16	43-4840	Spacer — Latch	1
17	46-8091	Screw — Self Tapping Hex Washer Hd.	1
18	42-4010	Latch — Safety	1
19	46-8090	Screw — Self Tapping Hex Washer Hd.	1
20	321-8	Capscrew	2
21	3256-22	Washer — Plain	2
22	3296-42	Nut — Lock	2
23	37-7260	Capscrew — Special	2
24	32144-11	Screw — Thread Forming Hex Washer Hd.	1
25	46-5870	Bracket Traction Adjustment	1

COPYRIGHT © ALL RIGHTS RESERVED

The Toro Company — 1983
MINNEAPOLIS, MN 55420 — U.S.A.

PRICE $1.00

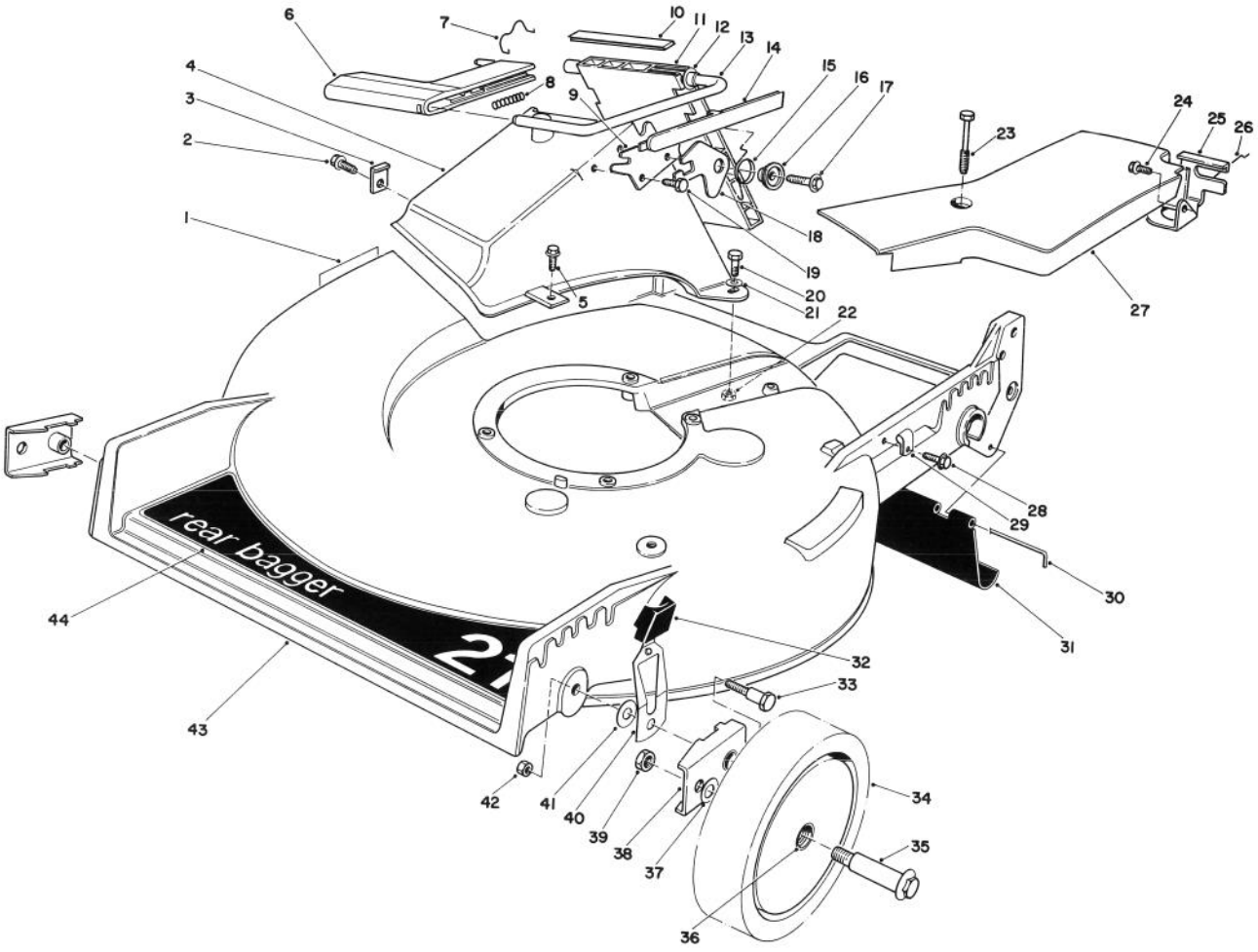

HOUSING ASSEMBLY (Continued)

Ref. No.	Part No.	Description	No. Used
26	46-7030	Retainer Cable	1
27	42-0381	Cover — Belt	1
28	12-5450	Screw — Thread Forming Hex Washer Hd.	1
29	2412-83	Cable Clamp	1
30	33-3208	Rod — Shield	1
31	44-0580	Shield — Trailing	1
32	25-7740	Knob Arm	2
33	44-5270	Screw — Pivot	2
34	44-0560	Wheel & Tire Assembly (Incl. Ref. #36)	2

Ref. No.	Part No.	Description	No. Used
35	27-6230	Wheel Bolt	2
36	27-6250	Bushing — Wheel	4
37	40-1940	Washer — Wheel Bolt	2
38	47-2940	Pivot Arm Assembly	2
39	3296-29	Nut — Lock	2
40	44-0990	Spring Arm Assembly	2
41	5-4460	Washer — Pivot	2
42	32146-6	Nut — Lock	2
43	11-4089	Housing (Incl. Ref. #1)	1
44	44-0450	Decal — 21" Rear Bagger	1

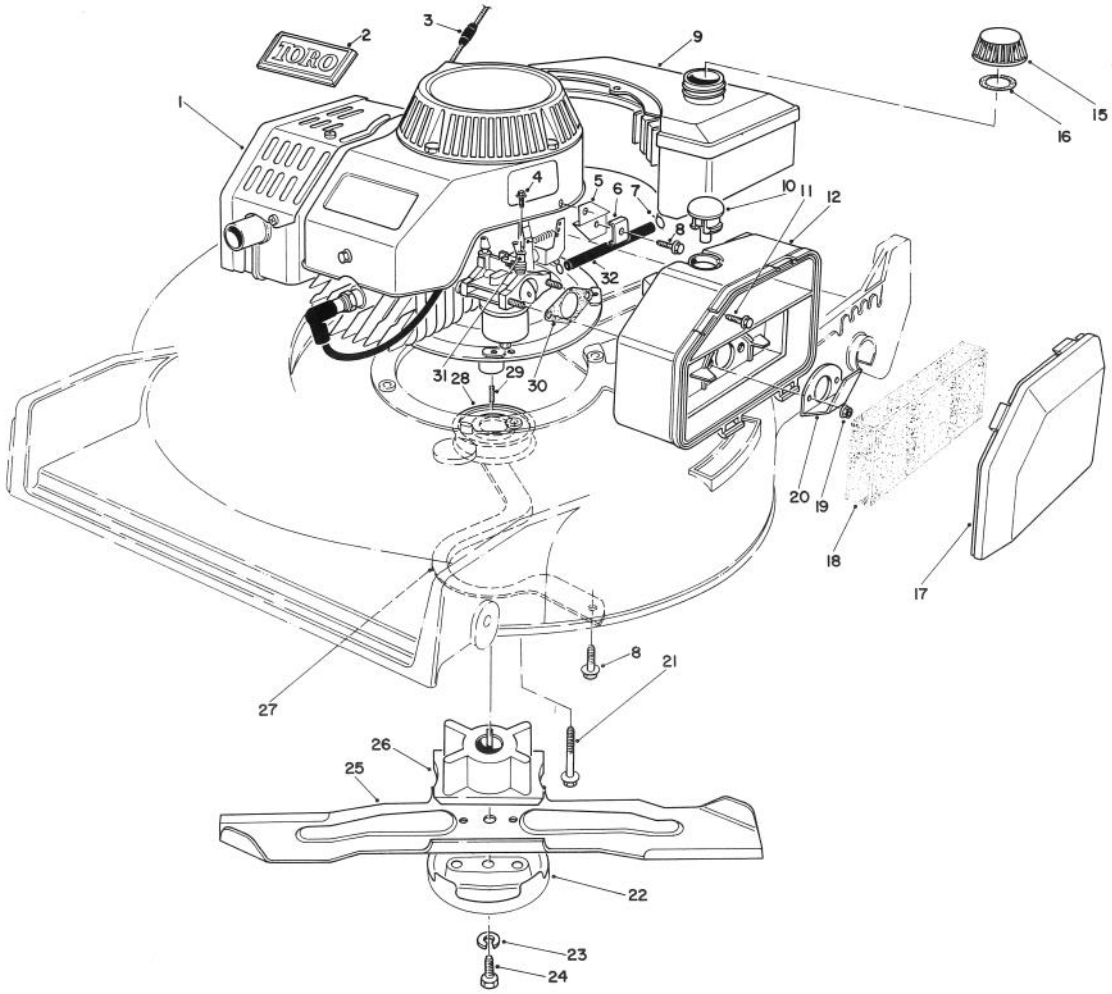

ENGINE ASSEMBLY

Ref. No.	Part No.	Description	No. Used
1	11-5169	Engine (Incl. Ref. #2)	1
2	46-8290	Plate — Toro Logo	1
3	47-2480	Stop — Rope	1
4	32144-60	Screw — Self Tapping Slotted Hex Washer Hd.	1
5	46-7860	Carrier — Cable	1
6	29-9550	Clamp — Cable	1
7	2412-80	Clamp — Fuel Line	2
8	11-9760	Screw — Thread Forming Hex Washer Hd.	3
9	81-0040	Fuel Tank Assembly	1
10	81-0080	Plug — Button	1
11	46-0071	Screw — Cap Hex Washer Hd.	1
12	81-0110	Air Cleaner	1
15	42-0681	Gas Cap Assembly (Incl. Ref. #16)	1

Ref. No.	Part No.	Description	No. Used
16	20-4620	Gasket — Gas Cap	1
17	81-0120	Cover — Air Cleaner	1
18	81-0100	Foam Element — Air Cleaner	1
19	46-0400	Nut — Lock	2
20	81-0140	Deflector	1
21	3234-11	Screw — Hex Flange	4
22	42-0910	Cup — Anti Scalp	1
23	3253-22	Washer — Lock	1
24	26-0670	Screw — Blade	1
25	42-1000	Blade 21"	1
26	46-7810	Retainer — Blade	1
27	40-5720	Guide — Belt	1
28	46-7910	Pulley — Driver	1
29	7-0036	Key — Square	1
30	81-0090	Gasket — Air Cleaner	1
31	81-0190	Lever — Choke	1
32	81-0150	Hose	1

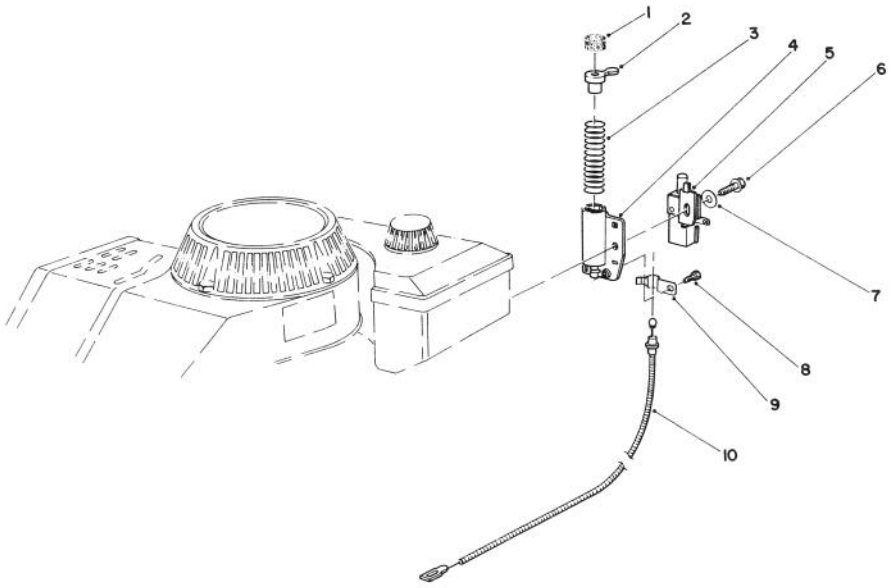

BRAKE ASSEMBLY

Ref. No.	Part No.	Description	No. Used
1		Pad — Friction	1
2	47-7350	Plunger Assembly (Incl. Ref. #1)	1
3	46-9130	Spring — Compression	1
4	46-5840	Tube	1
5	47-6520	Switch — Push Button	1

Ref. No.	Part No.	Description	No. Used
6	11-9760	Screw — Self Tapping	1
7	3256-22	Washer — Plain	1
8	12-5450	Screw — Thread Forming Hex Washer Hd.	1
9	46-6530	Cable Clamp	1
10	43-4531	Cable — Brake	1

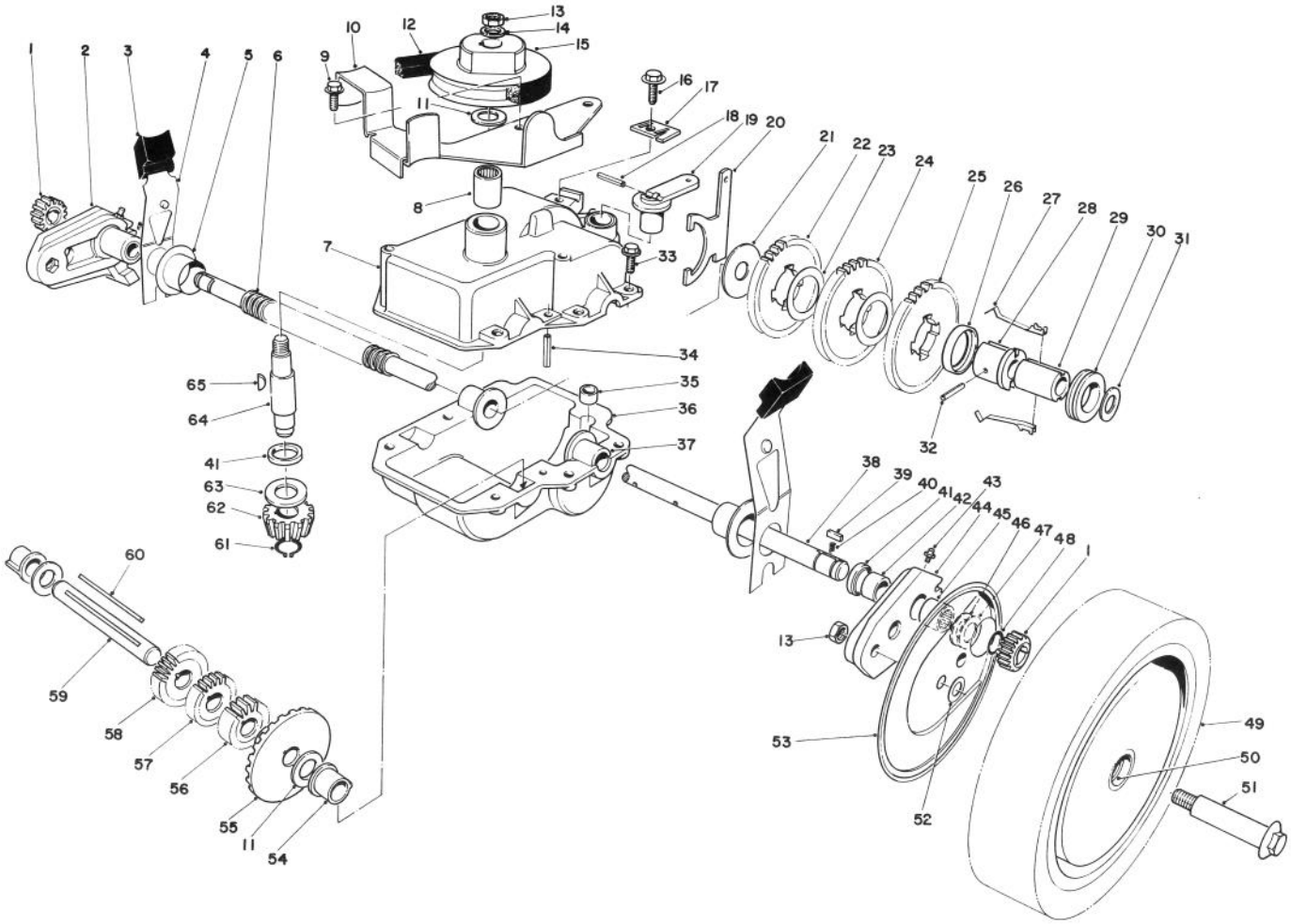

GEAR CASE ASSEMBLY

Ref. No.	Part No.	Description	No. Used
1	39-9160	Pinion	2
2	29-9590	Pivot Arm Assembly — R.H. (Incl. Ref. #41-43 & 45)	1
3	25-7740	Knob — Arm	2
4	44-1010	Spring Arm Assembly	2
5	42-3520	End Cap	2
6	24-7922	Cover — Drive Shaft	1
7	39-7282	Upper Case	1
8	47-6720	Bearing	1
9	12-3270	Screw — Special	2
10	46-3570	Bracket — Belt Guide	1
11	36-4790	Washer — Thrust	3
12	36-8070	V-Belt	1
13	32146-6	Locknut	3
14	3256-45	Washer	1
15	39-6740	Pulley	1
16	32144-11	Screw — Thread Forming	1
17	46-5610	Cable Clamp	1
18	32121-99	Coil Pin	1
19	29-9560	Lever — Shift	1
20	29-9520	Shift Yoke	1
21	29-9690	Washer	1
22	42-4740	Gear — 38T	1

Ref. No.	Part No.	Description	No. Used
23	36-4770	Spacer — Gear	2
24	29-9271	Gear — 42T	1
25	46-3560	Gear — 52T	1
26	39-7830	Key Retainer	1
27	39-6470	Key	2
28	39-6730	Sleeve Body	1
29	39-6720	Sleeve	1
30	29-9340	Shift Collar	1
31	36-4780	Washer	1
32	32121-106	Coil Pin	1
33	32144-44	Screw — Tapping	6
34	32121-100	Roll Pin	1
35	29-9570	Bushing — Yoke	1
36	29-9410	Lower Case	1
37	47-5220	Bushing — Output Shaft	2
38	44-0850	Output Shaft	1
39	39-9680	Key — Rectangular	2
40	39-9650	Spring	2
41	47-7260	Seal	3
42	47-2890	Bushing	2
43	302-56	Fitting Grease	2
44	29-9640	Pivot Arm Assembly — L.H. (Incl. Ref. #41-43 & 45)	1

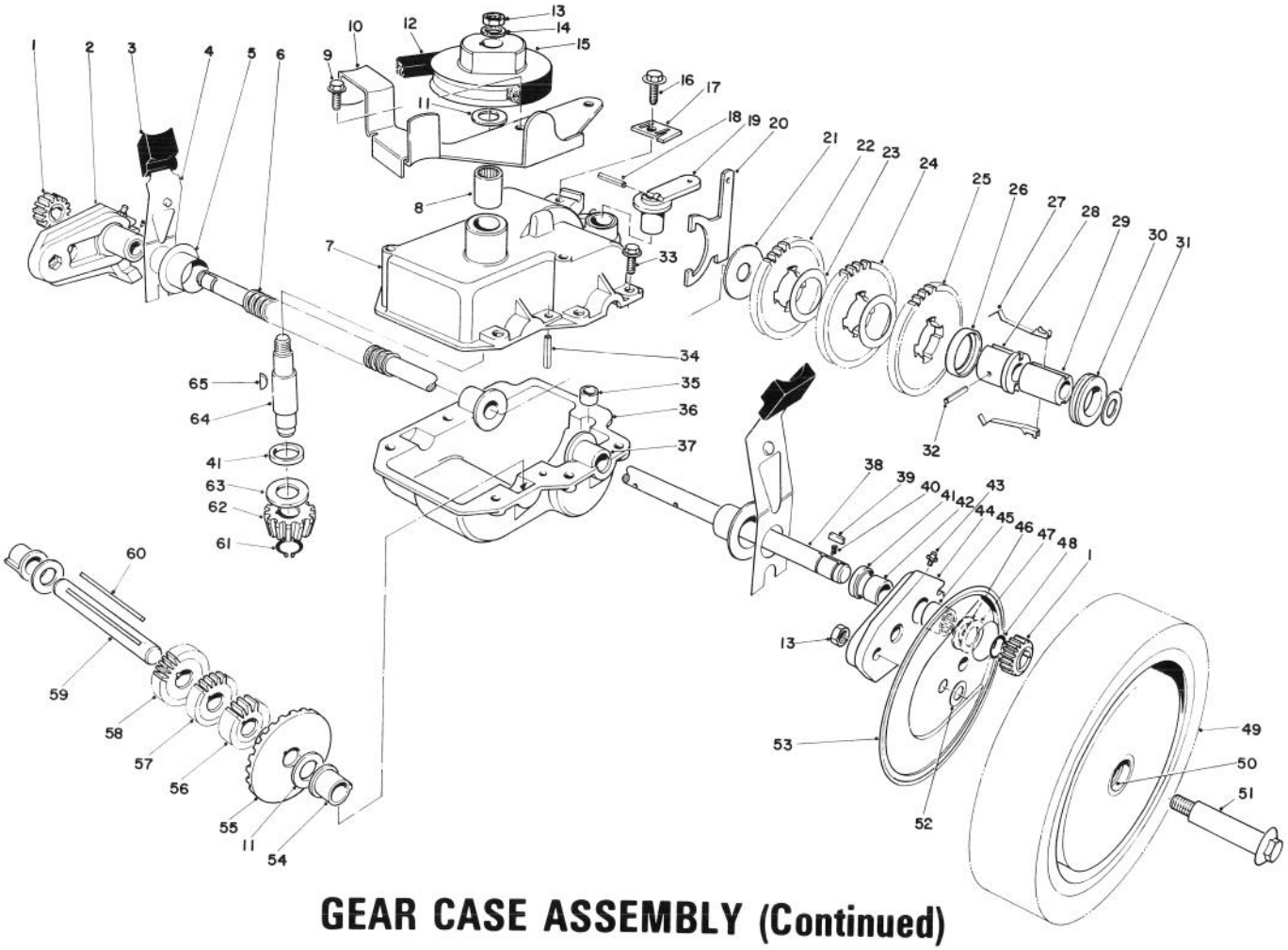

GEAR CASE ASSEMBLY (Continued)

Ref. No.	Part No.	Description	No. Used
45	48-2060	Needle Bearing	2
46	252-73	Washer — Thrust, Inner	2
47	46-2840	Washer — Thrust, Outer	2
48	32151-68	Retaining Ring	4
49	44-0570	Wheel, Tire & Gear Assembly Incl. Ref. #50)	2
50	27-6250	Bushing — Wheel	4
51	27-6230	Wheel Bolt	2
52	40-1940	Washer — Wheel Bolt	2
53	44-0600	Cover — Wheel	2
54	47-5210	Bushing — Short Shaft	2
55	39-6670	Gear — Bevel	1

Ref. No.	Part No.	Description	No. Used
56	46-3540	Gear — 12 Tooth	1
57	46-3550	Gear — 14 Tooth	1
58	39-6650	Gear — 18 Tooth	1
59	46-9470	Shaft — Intermediate	1
60	39-7841	Key — Square	1
61	32151-57	Ring — Retaining	1
62	39-6660	Pinion — Bevel	1
63	47-2910	Washer — Thrust	1
64	39-6690	Input Shaft	1
65	3257-1	Key — Woodruff	2
*	11-4139	Gear Case Assembly Complete	1

*Not Illustrated

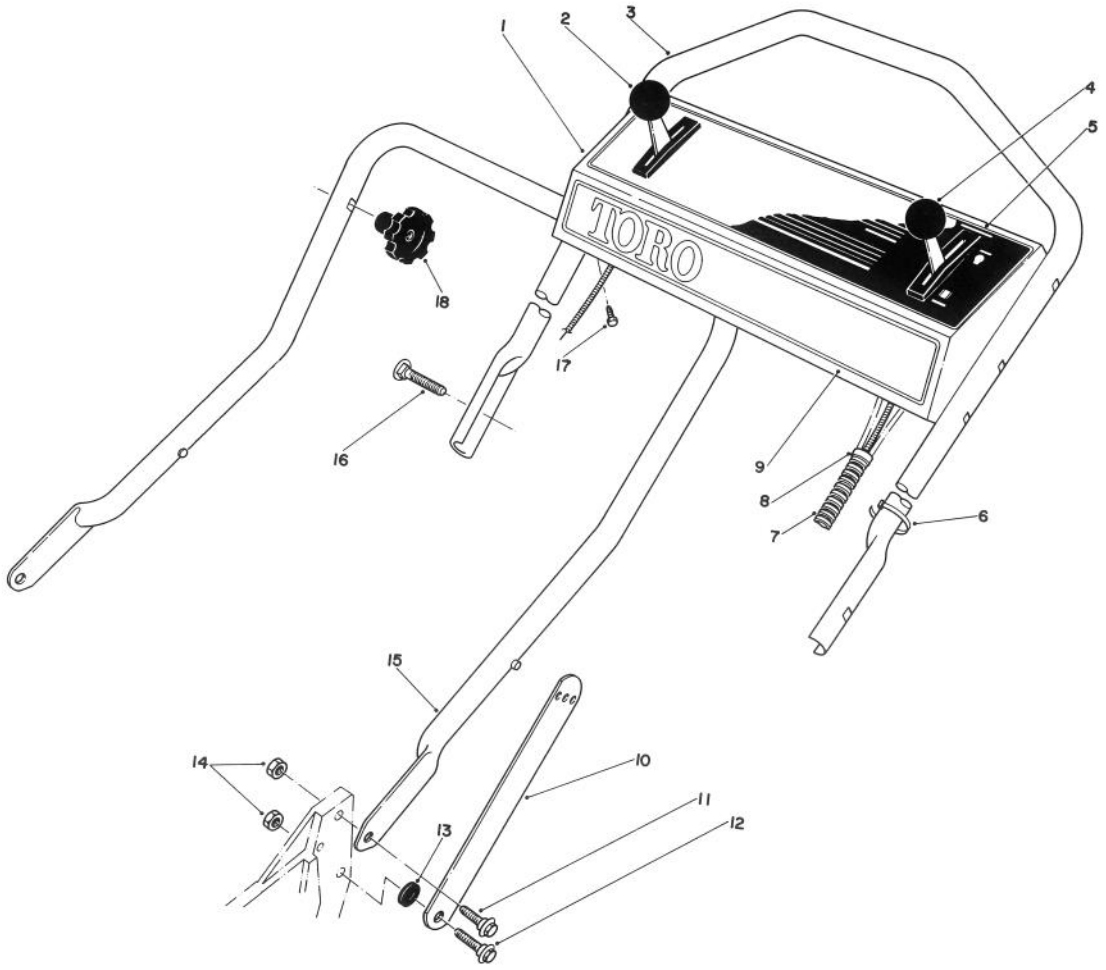

HANDLE ASSEMBLY

Ref. No.	Part No.	Description	No. Used
1	11-5199	Control Panel (Incl. Ref. #5)	1
2	46-5430	Control — Ground Speed	1
3	46-5411	Handle — Upper	1
4	46-8002	Control — Choke	1
5	46-7980	Decal — Instruction Panel	1
6	3290-378	Cable Tie	2
7	46-6440	Cover — Control Cables	1
8	2412-50	Clip — Convoluted Tubing	2
9	46-7380	Decal — Toro Panel	1
10	43-1370	Latch — Handle	2

Ref. No.	Part No.	Description	No. Used
11	27-7211	Screw — Shoulder	2
12	27-7210	Screw — Shoulder	2
13	3-3287	Spacer — Handle Latch	2
14	3296-47	Nut — Lock	4
15	43-1360	Lower — Handle	1
16	17-9421	Screw — Handle	2
17	32104-76	Screw — Self Tapping Slotted Hex Hd.	3
18	19-4050	Knob — Handle Release	2

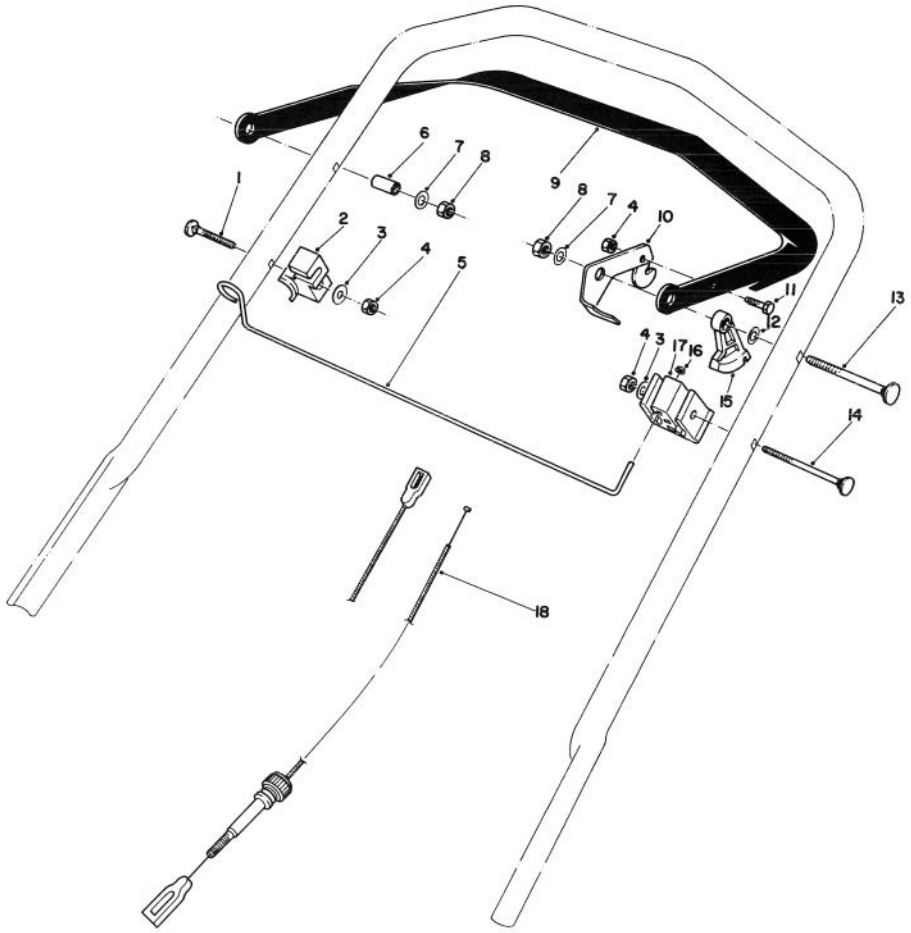

TRACTION CONTROL ASSEMBLY

Ref. No.	Part No.	Description	No. Used
1	46-6430	Screw — Handle	1
2	46-7960	Catch — Rod	1
3	3256-22	Washer — Plain	2
4	3296-42	Nut — Lock	3
5	46-7970	Rod — Rope	1
6	46-5580	Bushing P.M.	2
7	3256-23	Washer — Plain	2
8	3296-47	Nut — Lock	2
9	46-5560	Control Bar Assembly	1

Ref. No.	Part No.	Description	No. Used
10	46-7950	Lever — Control	1
11	321-5	Screw — Cap Hex Hd.	1
12	3256-25	Washer — Plain	1
13	17-9421	Screw — Handle	2
14	46-6432	Screw — Handle	1
15	46-5520	Lever Traction	1
16	3290-337	Push Nut	1
17	46-6980	Support Cable	1
18	46-5481	Cable — Traction	1

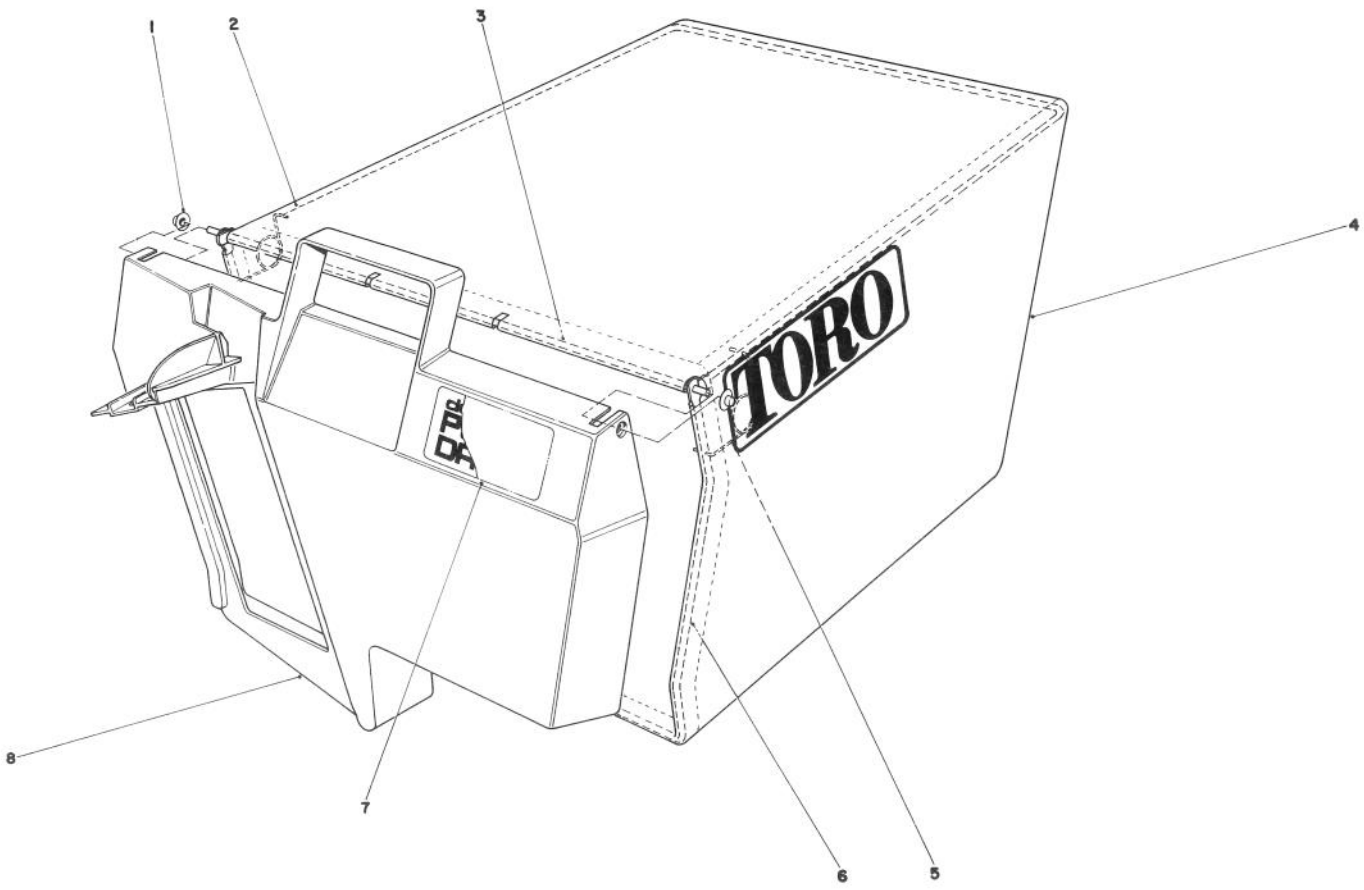

GRASS BAG ASSEMBLY NO. 11-0189

Ref. No.	Part No.	Description	No. Used
1	3290-422	Push Nut	2
2	42-4030	Bag Frame Upper	1
3	33-4820	Hinge Bag Door	1
4	8-2759	Grass Bag	1

Ref. No.	Part No.	Description	No. Used
5	36-6910	Spring	2
6	42-4020	Frame Bag	1
7	40-2240	Decal — Bag Door	1
8	37-1390	Door Grass Bag	1

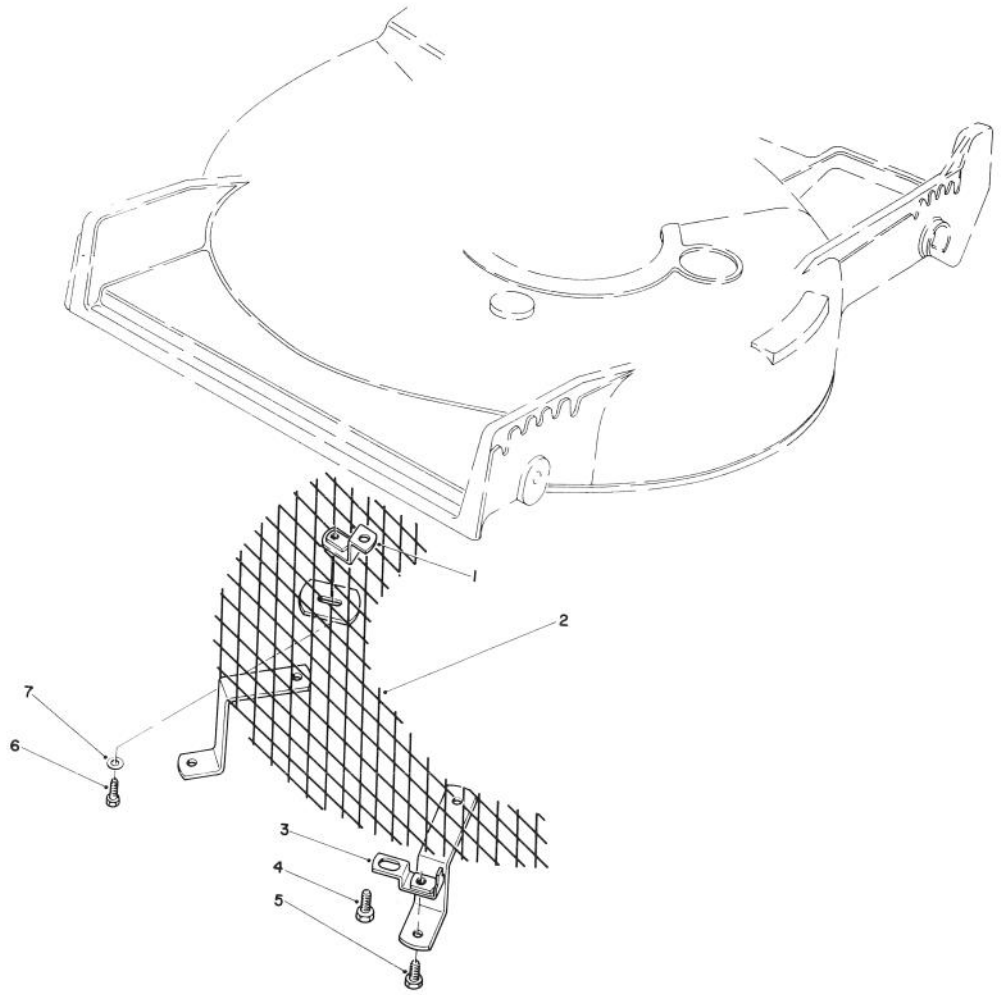

LEAF SHREDDER KIT MODEL NO. 59157 (Optional)

Ref. No.	Part No.	Description	No. Used
1	47-6260	Bracket	1
2	47-6230	Screen	1
3	46-4880	Mounting Bracket	2
4	32144-11	Screw — Self Tapping	2

Ref. No.	Part No.	Description	Ref. No.
5	321-3	Capscrew, Hex Hd.	2
6	321-5	Capscrew, Hex Hd.	1
7	3256-1	Washer	1

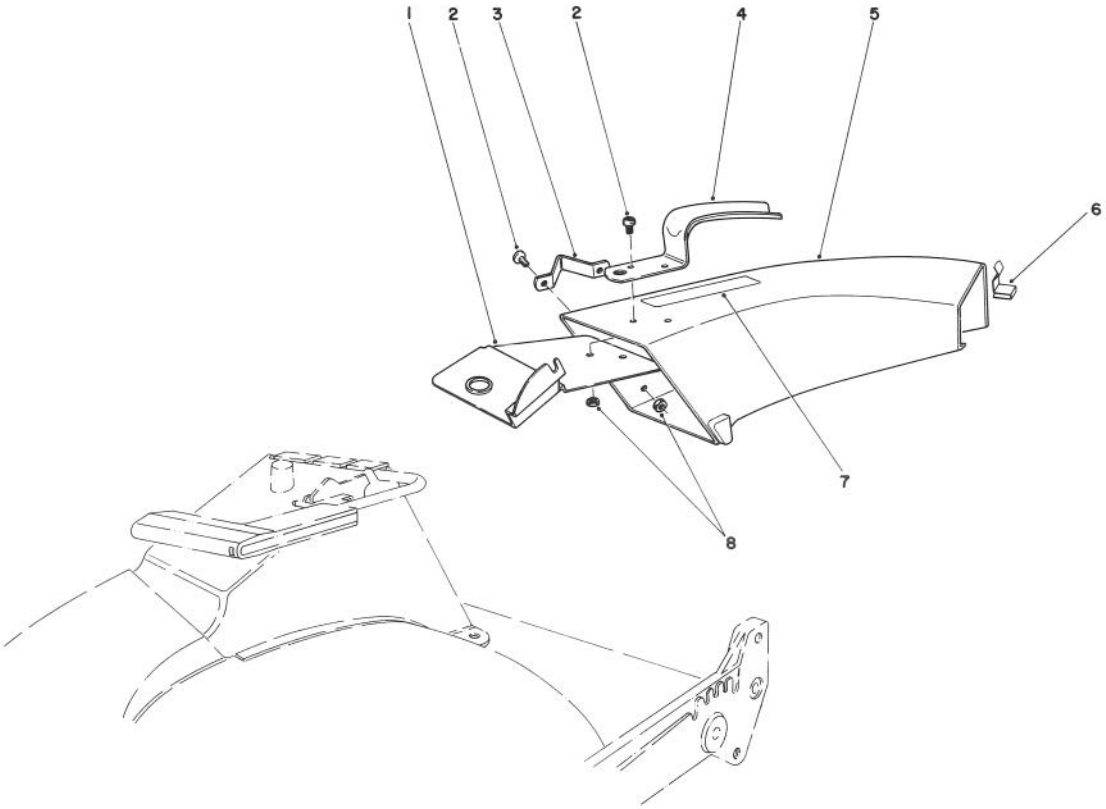

SIDE DISCHARGE CHUTE MODEL NO. 59108 (Optional)

Ref. No.	Part No.	Description	No. Used
1	44-2330	Plate — Discharge Chute	1
2	3251-3	Screw	4
3	46-6580	Bracket	1
4	42-1340	Handle — Grass Chute	1

Ref. No.	Part No.	Description	No. Used
5†		Chute Assembly	1
6	3290-439	Clip	1
7	39-9120	Decal — Caution	1
8	3296-12	Locknut	4

†Order Chute Assembly Model No. 59108.

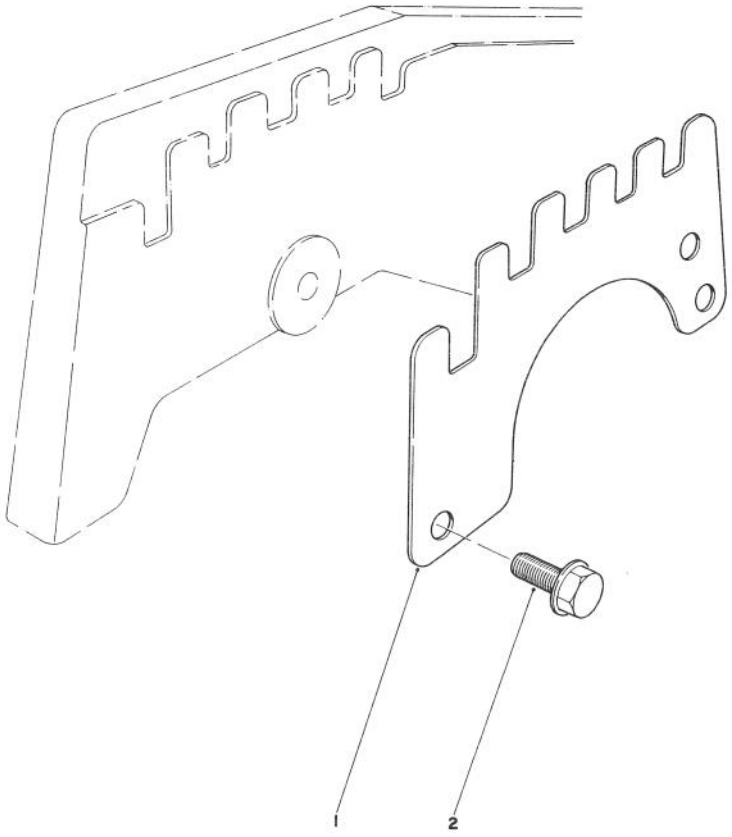

WEAR PLATE KIT NO. 44-5530 (Optional)

Ref. No.	Part No.	Description	No. Used
1	43-5050	Plate — Wear	4

Ref. No.	Part No.	Description	No. Used
2	12-3270	Screw — Thread Forming	8

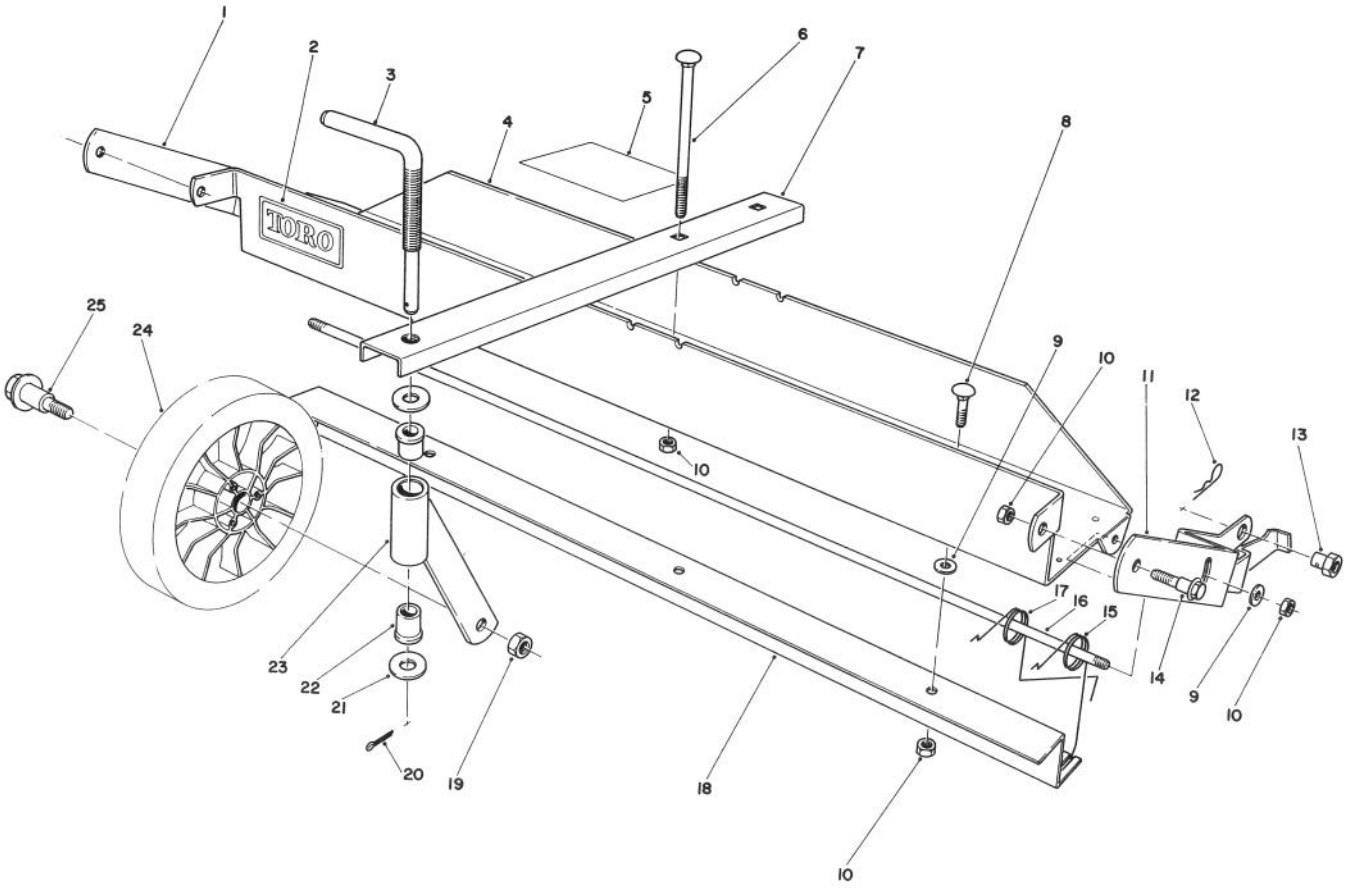

DETHATCHER KIT MODEL NO. 59126 (Optional)

Ref. No.	Part No.	Description	No. Used
1	47-6030	Frame Mount — R.H.	1
2	44-0810	Decal — Toro	1
3	47-6120	Rod — Castor Adjust	1
4	47-2390	Frame — Main (Incl. Ref. #2)	1
5	47-7500	Decal — Instruction	1
6	3230-13	Carriage Bolt	2
7	47-6090	Castor Frame	1
8	3230-1	Carriage Bolt	3
9	3256-24	Washer — Plain	5
10	32153-3	Locknut	9
11	47-6020	Frame Mount — L.H.	1
12	3290-255	Hairpin Cotter	2
13	47-6130	Pivot Nut	2

Ref. No.	Part No.	Description	No. Used
14	19-1470	Screw — Shoulder	2
15	47-6040	Spring — Dethatcher	6
16	47-6050	Rod — Spring Support	1
17	47-6041	Spring — Dethatcher	6
18	47-6010	Strap — Spring Guide	1
19	32146-6	Locknut	1
20	3272-11	Cotter Pin	1
21	3256-4	Washer	2
22	47-6110	Bushing — Flange	2
23	47-6060	Castor Tube & Support	1
24	34-0380	Wheel Assembly	1
25	27-6230	Wheel Bolt	1
*	11-5239	Loose parts	1

*Not Illustrated

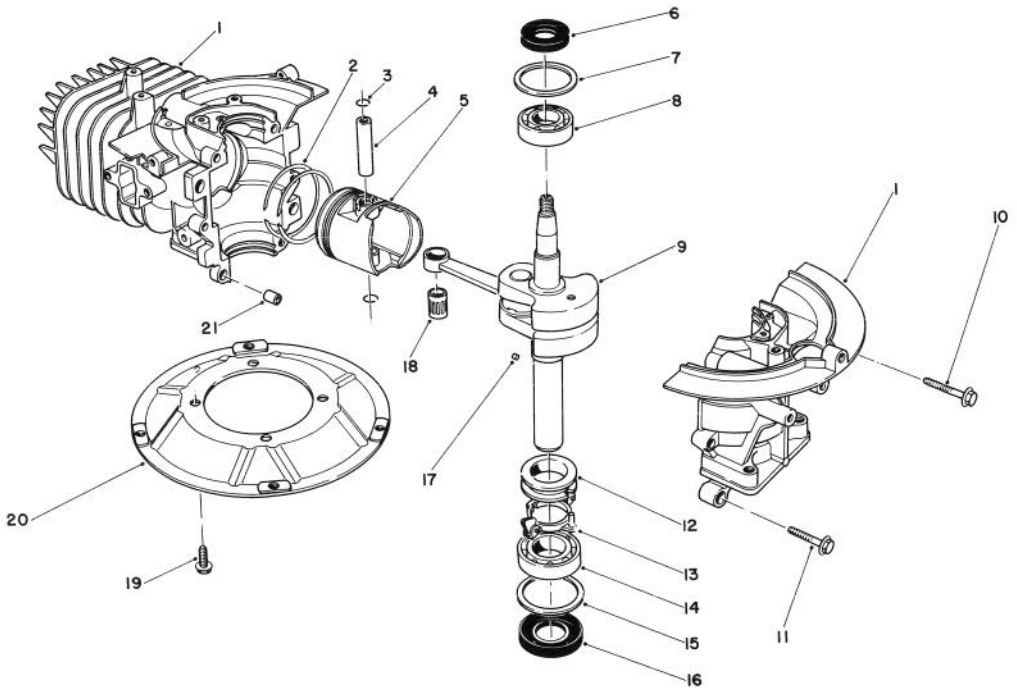

CRANKSHAFT ASSEMBLY

Ref. No.	Part No.	Description	No. Used
1	81-0510	Crankcase Assembly	1
2	81-0590	Ring Set	1
3	81-0620	Circlip	2
4	81-0600	Pin — Piston 12 mm dia.	1
5	81-0580	Piston — 58 mm	1
6	81-0720	Oil Seal — Upper	1
7	81-0710	Thrust Washer — Upper	1
8	81-0690	Bearing — Upper — 20mm	1
9	81-1550	Crankshaft Assembly	1
10	81-0550	Bolt (35mm Lg.)	1
11	81-0540	Bolt (30mm Lg.)	2

Ref. No.	Part No.	Description	No. Used
12	81-0770	Spacer — Governor	1
13	81-0750	Bracket — Arm Governor	1
14	81-0700	Bearing — Lower 25mm	1
15	81-0730	Thrust Washer — Lower	1
16	81-0740	Oil Seal — Lower	1
17	81-0760	Pin — 3mm dia. x 5mm long	1
18	81-0610	Bearing — Wrist Pin	1
19	81-0570	Bolt	4
20	81-0560	Plate — Mounting	1
21	81-0520	Pin — Crankcase Dowel	2

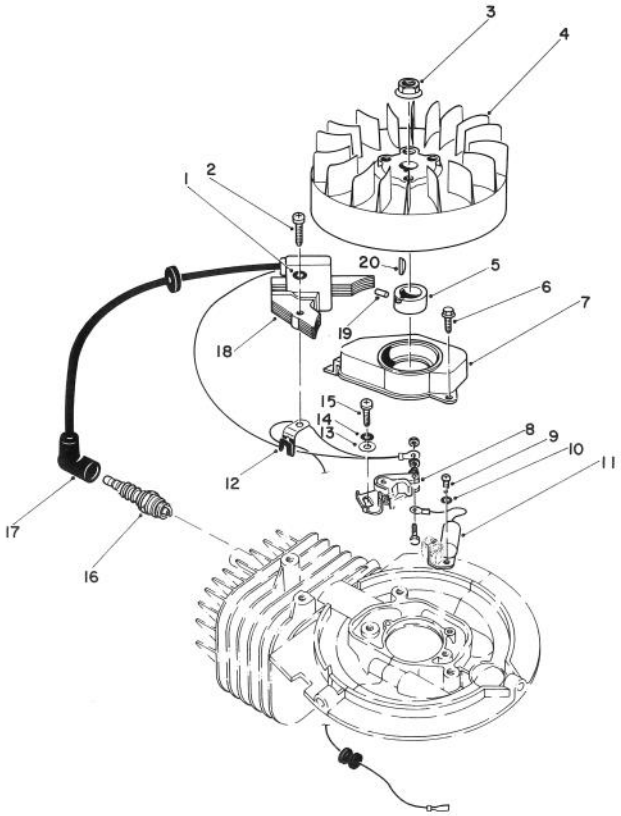

FLYWHEEL & MAGNETO ASSEMBLY

Ref. No.	Part No.	Description	No. Used
1	81-1450	Lockwasher	1
2	81-1440	Screw	1
3	81-1330	Nut	1
4	81-1310	Flywheel — Magneto	1
5	81-1460	Cam — Contact Point	1
6	81-1350	Bolt — Self Tapping	1
7	81-1340	Cover — Contact Point	1
8	81-1360	Point Assembly — Contact	1
9	81-1410	Screw	1
10	81-1420	Lockwasher	1
11	81-1400	Condenser	1

Ref. No.	Part No.	Description	No. Used
12	81-1480	Clamp	1
13	81-1390	Washer — Plain	1
14	81-1380	Lockwasher	1
15	81-1370	Screw — Phillips Hd.	1
16	81-0180	Spark Plug	1
17	81-1500	Cap — Spark Plug	1
18	81-1430	Coil Assembly — Ignition	1
19	81-0760	Pin	1
20	81-1320	Key — Aluminum Woodruff	1
*	81-1540	Tune Up Kit (Incl. Ref. #8 & 11)	1
*	41-7650	Puller — Flywheel	1
*	41-7900	Timing Tester	1

*Not Illustrated

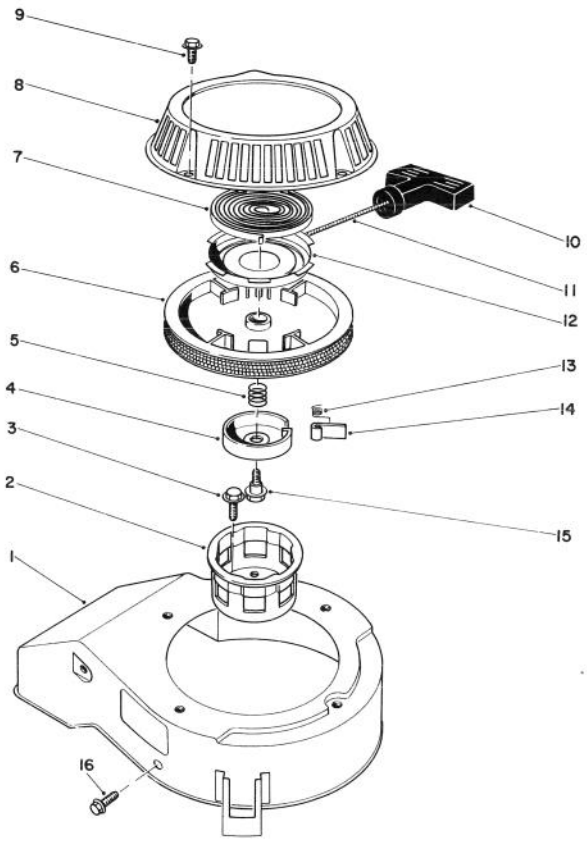

RECOIL ASSEMBLY

Ref. No.	Part No.	Description	No. Used
1	81-1160	Cover — Cooling Fan	1
2	81-1290	Cup — Starter Pulley	1
3	81-1300	Bolt	3
4	81-1250	Retainer	1
5	81-1240	Spring — Compression	1
6	81-1210	Reel — Rope Pulley	1
7	81-1200	Spring — Recoil	1
8	81-1190	Case	1
9	81-1280	Bolt	4

Ref. No.	Part No.	Description	No. Used
10	81-1630	Handle — Recoil	1
11	81-1270	Rope	1
12	81-1640	Retainer Cup — Recoil Spring	1
13	81-1220	Spring — Dog	2
14	81-1230	Dog	2
15	81-1260	Bolt	1
16	81-1170	Bolt	3
*	81-1180	Starter Assembly (Incl. Ref. #4-15)	1

*Not Illustrated

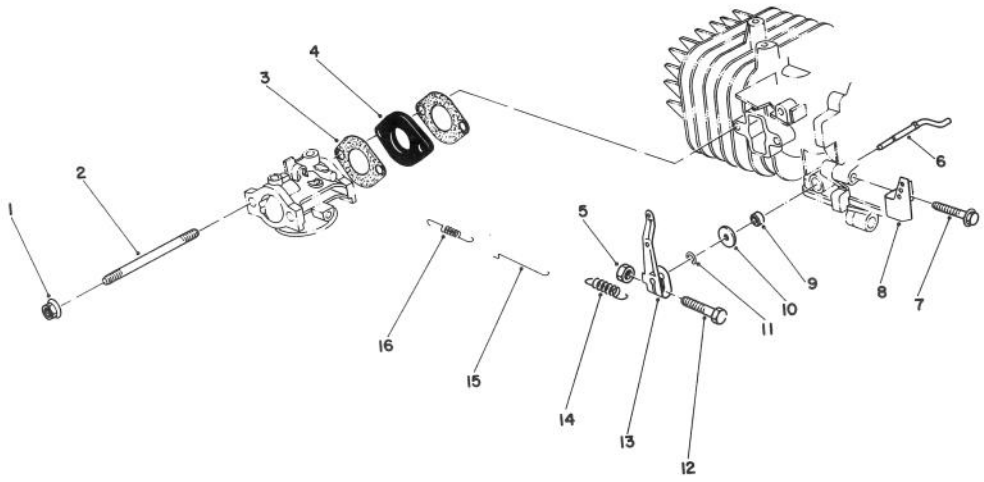

GOVERNOR ASSEMBLY

Ref. No.	Part No.	Description	No. Used
1	46-0400	Nut	2
2	81-0800	Stud-Bolt — Carburetor	2
3	81-0780	Gasket — Carburetor	2
4	81-0790	Insulator — Carburetor	1
5	81-0900	Nut	1
6	81-0840	Shaft — Governor	1
7	81-0530	Bolt (25mm Lg.)	3
8	81-0930	Bracket — Governor Spring	1

Ref. No.	Part No.	Description	No. Used
9	81-0850	Oil Seal	1
10	81-0860	Washer	1
11	81-0870	E-Ring	1
12	81-0890	Bolt	1
13	81-0880	Lever — Throttle Control	1
14	81-0920	Spring	1
15	81-0910	Rod — Carburetor	1
16	81-0940	Spring (L-31) 3000 RPM	1

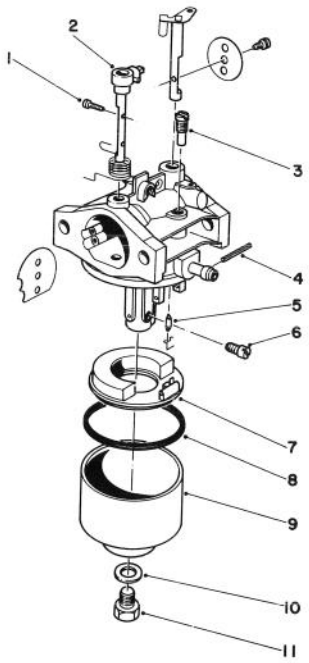

CARBURETOR ASSEMBLY

Ref. No.	Part No.	Description	No. Used
1	81-0990	Screw	2
2	81-1650	Shaft — Choke	1
3	81-1030	Jet — Pilot (40)	1
4	81-0980	Pin	1
5	81-1600	Needle Valve & Spring Wire	1
6	81-1040	Jet — Main (80)	1
*	81-1050	Jet — Main (77.5) High Altitude (above 6,000 ft.) (Optional)	1

Ref. No.	Part No.	Description	No. Used
7	81-0970	Float	1
8	81-1010	Gasket	1
9	81-1610	Float — Bowl	1
10	81-1020	Gasket — Bowl Screw	1
11	81-1000	Bolt	1
*	81-1620	Carburetor Kit (Incl. Ref. #3, 5-6, 8 & 10)	1
*	81-0960	Carburetor Assy. Complete	1

*Not Illustrated

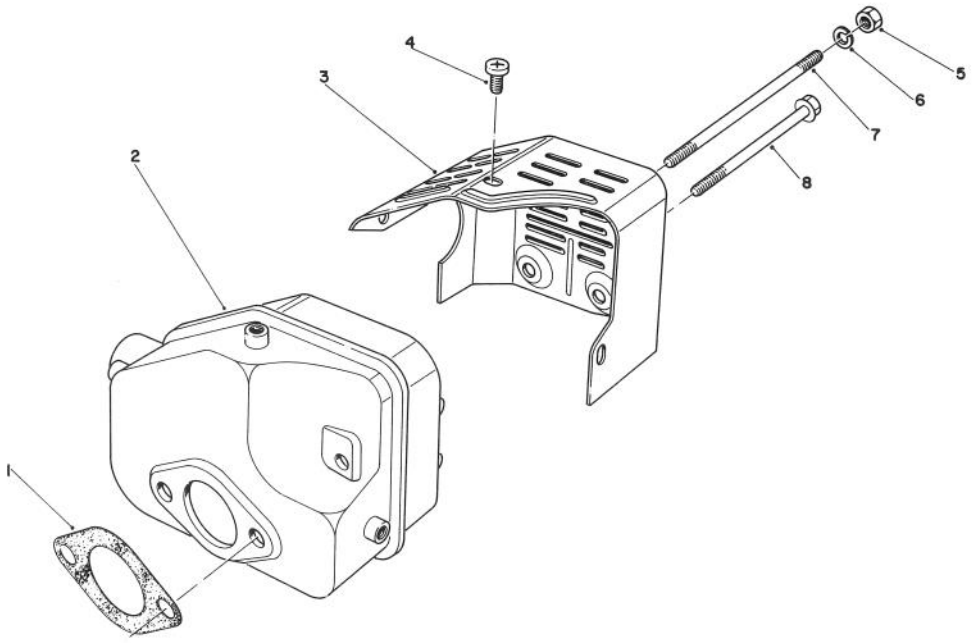

MUFFLER ASSEMBLY

Ref. No.	Part No.	Description	No. Used
1	81-1080	Gasket — Muffler	1
2	81-1090	Muffler	1
3	81-1130	Cover — Muffler	1
4	81-1140	Screw — Phillips Hd.	3
5	81-1110	Nut	2
6	81-1120	Washer — Lock	2
7	81-1100	Bolt	2
8	81-1150	Bolt — Self Tapping	1
*	81-0200	Spark Arrester	1

*Not Illustrated

PRODUCT CHANGES

In an effort to make improvements available to TORO owners as quickly as possible, minor changes are incorporated into Toro's products from time to time that do not become immediately shown in the Parts Catalog. If such a change apparently has been made in your unit, which is not reflected in your manual, see your TORO Distributor or his Authorized TORO Service Dealer for information and part numbers.

IDENTIFICATION AND ORDERING

MODEL AND SERIAL NUMBERS

The Mower has two identification numbers: a model number and a serial number. The two numbers are stamped on a decal which is located on the mower housing between the rear wheels. In any correspondence concerning the mower, supply model and serial numbers to assure that correct information and replacement parts are obtained.

To order replacement parts from an Authorized TORO Service Dealer, supply the following information:

1. Model and serial numbers of the mower.
2. Part number, description, and quantity of part(s) desired.

Note: Do not order by reference number if a parts catalog is being used; use the PART NUMBER.

The Toro Promise

Two Cycle Rotary Mower
A Limited Warranty

The Toro Company promises to repair your TORO Product if defective in materials or workmanship. The following time periods from the date of purchase apply:

Mower (Residential Use) ..... 1 Year
Engine Only (Residential Use) ..... 2 Years
Mower and Engine (Commercial Use) ..... 45 Days

The costs of parts and labor are included, but the customer pays the transportation costs. Just return any residential product to an Authorized TORO Service Dealer or TORO Distributor.

Should you feel your TORO mower is defective and wish to rely on The Toro Promise, the following procedure is recommended:

1. Contact any Authorized TORO Service Dealer, TORO Master Service Dealer, or TORO Distributor (the Yellow Pages of your telephone directory is a good reference source).
2. He will either instruct you to return the product to him or recommend another Authorized TORO Service outlet which might be more convenient.
3. Bring the product along with your original sales slip, or other evidence of purchase date, to the service dealer.
4. The servicing dealer will inspect the unit, advise you whether the product is defective and, if so, make all repairs necessary to correct the defect without extra charge to you.

If for any reason you are dissatisfied with the dealer's analysis of the defect or the service performed, you may contact us.

Write:

TORO Customer Service Department
8111 Lyndale Avenue South
Minneapolis, Minnesota 55420

The above remedy of product defects through repair by an Authorized TORO Service Dealer is the purchaser's sole remedy for any defect.

THERE IS NO OTHER EXPRESS WARRANTY. ALL IMPLIED WARRANTIES OF MERCHANTABILITY AND FITNESS FOR USE ARE LIMITED TO THE DURATION OF THE EXPRESS WARRANTY.

Some states do not allow limitation on how long implied warranty lasts, so the above limitation may not apply to you.

This Warranty applies only to parts or components which are defective and does not cover repairs necessary due to normal wear, misuse, accidents, or lack of proper maintenance. Bent or broken crankshafts are normally due to abnormal use and are not covered by this warranty. Regular, routine maintenance of the unit to keep it in proper operating condition is the responsibility of the owner.

All warranty repairs reimbursable under The Toro Promise must be performed by an Authorized TORO Service Dealer using Toro approved replacement parts.

Repairs or attempted repairs by anyone other than an Authorized TORO Service Account are not reimbursable under The Toro Promise. In addition, these unauthorized repair attempts may result in additional malfunctions, the correction of which is not covered by warranty.

The Toro Company is not liable for indirect, incidental or consequential damages in connection with the use of the product including any cost or expense of providing substitute equipment or service during periods of malfunction or non-use.

Some states do not allow the exclusion of incidental or consequential damages, so the above exclusion may not apply to you.

This warranty gives you specific legal rights, and you may also have other rights which vary from state to state.

Certifie Conforme au Reglement sur le Brouillage Radioelectrique.