FORM NO. 95-9092

MODEL NO. 41020-80101 & UP
MODEL NO. 41021-80101 & UP
MODEL NO. 41442-80101 & UP
MODEL NO. 41440-80101 & UP

SET-UP AND PARTS CATALOG

SKID SPRAYER
with the 41442 PTO Pump

SAFETY AND INSTRUCTION DECALS

The following safety and instruction decals are installed on the Standard Spray System. If any become damaged or illegible, replace them. Decals and part numbers are listed below and in the parts catalog. Order replacements from your Authorized Toro Distributor.



Part No. 87-0450: Located on Belt Cover



Part No. 92-3518: Located on Front of Tank



Part No. 93-0688: Located on Lid of Sprayer Tank



Part No. 93-0800: Located on Side of Clean Water Wash Tank



Part No. 95-9320: Located on Front of Tank

©The TORO Company - 2000
All Rights Reserved

Skid Mode Set-Up Instructions

NOTE: The following instructions are for installing the 110 Gallon Skid Sprayer on a Workman Vehicle. If installing on a different vehicle some modification may be necessary.

SADDLE AND SKID:

1. Cut the shipping straps and remove the Spray Tank and Saddle Assembly from the shipping skid.

NOTE: In the following instructions, "thread sealer" refers to Teflon thread tape.

NOTE: The end of the Tank with Safety Decals is the L.H. side of Tank and Saddle Assembly when being used in skid mode.

2. Secure the 1/2" x 42" Agitator Hose to the 90° Barbed Elbow in bottom of Tank using (1) Hose Clamp. Assure that the Barbed Elbow is pointing to the left rear of Tank.

3. Apply thread sealer and install the 1-1/4" x 90° Barbed Elbow into the bottom of the Tank so that it is pointing to the left rear of tank.

4. Secure the 1-1/4" x 36" Suction Hose to the 90° Barbed Elbow in bottom of Tank using (1) Hose Clamp.

5. Set the Tank Saddle Assembly on the bed of the transport vehicle with the Safety Decals on the Tank to the L.H. side of vehicle.

6. Slide the (4) Connector Tubes into the Saddle Assembly. Secure with (4) 1/2" x 3-1/2" cap screws and flange nuts. See FIG. 1.

7. Secure the (4) Mounting Brackets to Connector Tubes using (8) 1/2" x 1-1/2" cap screws and flange nuts.

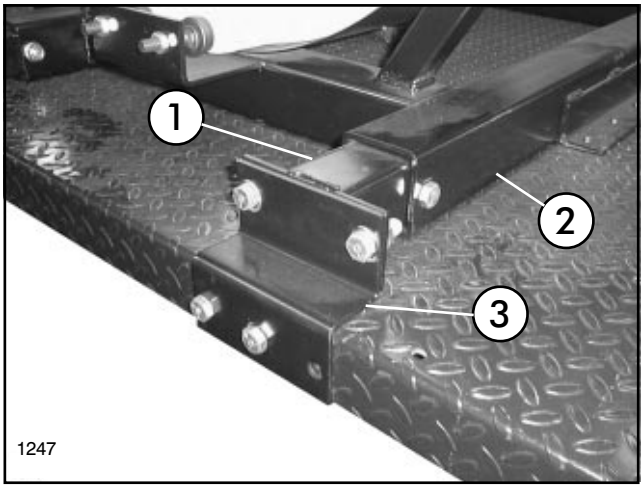

FIG. 1

1. Connector Tubes
2. Saddle Assembly
3. Mounting Brackets

NOTE: If installing the Skid Sprayer on a vehicle other than the Workman use the dimensions below as a general guideline. Be sure that the Tank is as far in front of the rear axle as possible.

8. Locate the Saddle Assembly on Cargo Bed, as shown in FIG. 2. Use holes in Mounting Brackets to drill (2) 17/32" diameter holes per Mounting Bracket.

IMPORTANT! Before drilling any holes check the location of crossmembers in the Cargo Bed. Location of the crossmembers will determine which two of the three holes in each of the Mounting Brackets you use.

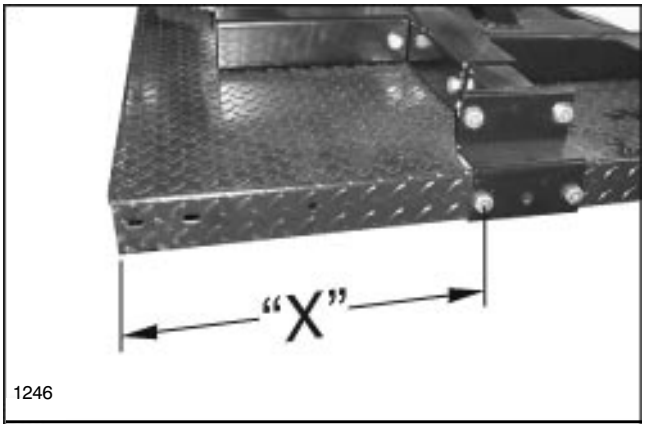

FIG. 2

Full & 2/3 Cargo Bed X = 15.5" (393.7mm)
2/3 Cargo Bed w/side rails X = 13.5"(342.9mm)

9. Attach Mounting Brackets to Cargo Bed using (8) 1/2" x 1-1/2" cap screws and flange nuts. See FIG. 1 & 2.

10. Slide the Pump Base on to the mount tubes on the rear of the Saddle Assembly. Secure using (2) 1/2" x 3-1/2" cap screws and flange nuts. See FIG. 3.

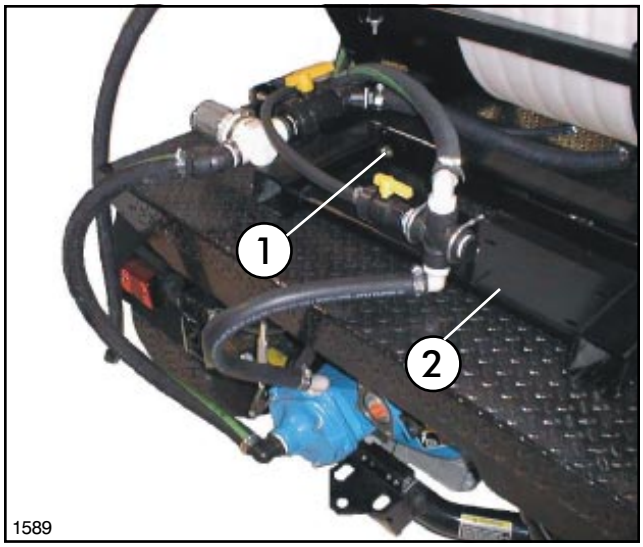

FIG. 3

1. 1/2" x 3-1/2" Cap Screw
2. Engine/Pump Base (Cross Base)

PTO CENTRIFUGAL PUMP:

1. Secure the Strainer Bracket to the rear L.H. side of Engine/Pump Base using studs on Engine/ Pump Base and (2) 5/16” flange nuts. See FIG. 4.

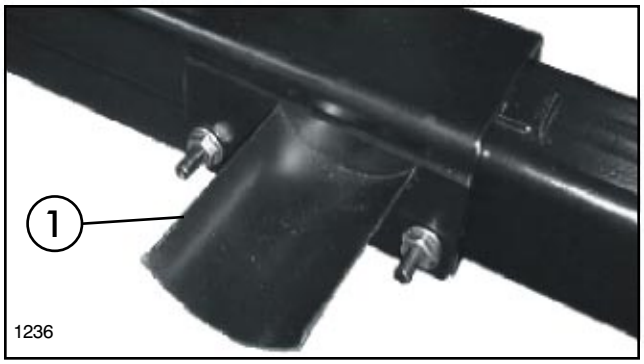

FIG. 4
1. Strainer Bracket

NOTE: The arrow on the top of Suction Strainer indicates direction of flow. The arrow should point away from 1-1/4” Ball Valve.

2. Apply thread sealer and attach the 1-1/4” Ball

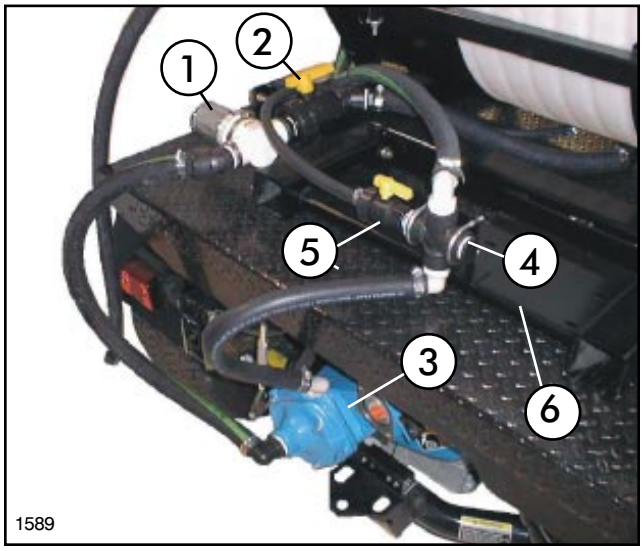

FIG. 5
1. Suction Strainer
2. 1-1/4” Ball Valve
3. Pump
4. Cross
5. 1/2” Ball Valve
6. Cross Base

Valve into the inlet port of the Suction Strainer using (1) 1-1/4” close nipple. See FIG. 5.

3. Apply thread sealer and install a 1-1/4” Hose Barb into the 1-1/4” Ball Valve.

4. Apply thread sealer and install (1) 45° Elbow and 1-1/4” Hose Barb into the outlet port of the Suction Strainer.

5. Secure Suction Strainer to Strainer Bracket using (1) hose clamp.

6. Attach the other end of the 1-1/4 x 36” Suction Hose earlier attached to bottom of Tank to Hose Barb in Ball Valve. Secure with hose clamp.

Installation of PTO Centrifugal Pump:

1. When viewing PTO Pump with outlet port and large diameter on belt cover pointed up, locate the bolt at the lower left corner. Remove this bolt and replace it with a 3/8” x 3-1/2” Hex Head Machine Screw furnished in parts bag. On

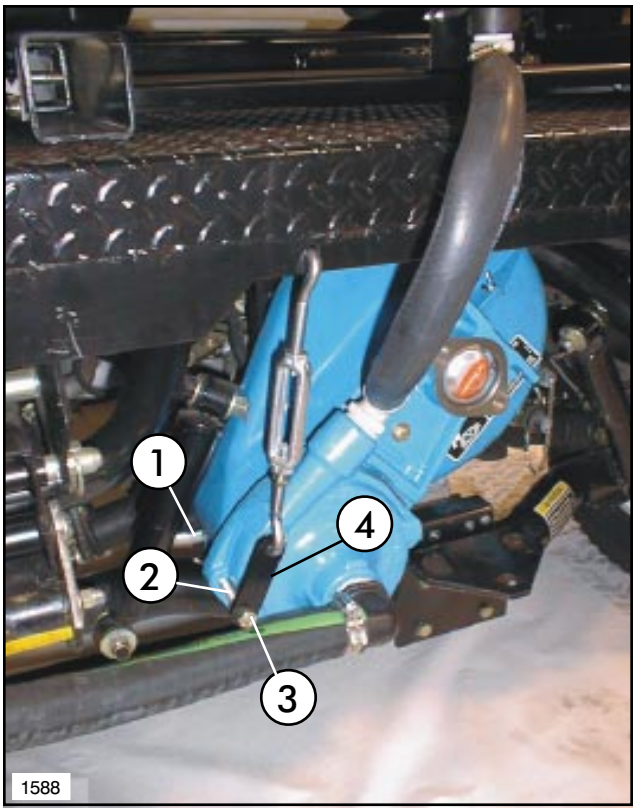

FIG. 6
1. Long Bolt
2. Locknut
3. Locknut
4. Connecting Lug

the long bolt, install locknut, connecting lug, and locknut as shown in FIG. 6.

2. Install the Pump Assembly on the PTO output shaft of the Workman Vehicle, securing in place with the quick coupler.

3. Drill 7/16” hole in rear panel of flat bed, approximately 2” from notch on left side and 1/2” up from bottom edge (as shown in FIG. 6).

4. Install Turnbuckle and adjust Pump so there is clearance around the Pump and it does not interfere on anything.

5. Apply thread sealer and install (1) 1” X 1” Hose Barb 90° Elbow into the outlet port of the Pump.

6. Apply thread sealer and install (1) 1-1/4” x

1-1/4” Hose Barb 90° Elbow into the inlet port of the pump.

7. Connect Suction Strainer and Pump with 1-1/4” x 36” suction hose. Secure with (2) hose clamps.

8. Apply thread sealer and install 1” x 1/2” reducing bushing, 1/2” close nipple, 1/2” Ball Valve and hose barb into L.H. port in Cross. See FIG. 5.

9. Apply thread sealer and install 1” plug into R.H. port in Cross. (Port for optional Spray Gun 41022.)

10. Apply thread sealer and install 1” x 90° hose barb in top port in Cross. Apply thread sealer and install 1” x 90° hose barb in bottom port in Cross.

11. Mount Cross Base to Engine / Pump Base mounted to Tank Saddle frame using 5/16” x 3/4” Whizlock cap screw and flange nut. See FIG. 5.

IMPORTANT! DO NOT overtighten U-Bolts in step 12. The clamping action could crush the Cross.

12. Mount Cross Assembly to Cross Base, as shown in FIG. 5, using (2) 5/16” U-Bolts and (4) flange nuts.

13. Attach the other end of the 1/2” x 42” Agitator Hose earlier attached to bottom of Tank to hose barb in Ball Valve. Secure with 1/2” hose clamp.

14. Secure a 1” x 44” Hose to the upper 90° hose barb in cross using (1) 1” hose clamp. Route other end of hose toward front of vehicle along L.H. side.

15. Connect lower 90° hose barb in cross and 90° hose barb in outlet port of pump with 1” x 24” hose and secure with (1) 1” hose clamp at each end.

PRESSURE ADJUST AND RATCHET VALVE:

1. Secure the Valve Plate to the rear bar of the Saddle Assembly using (2) U-Bolts and (4) 5/16” flange nuts. See FIG. 7.

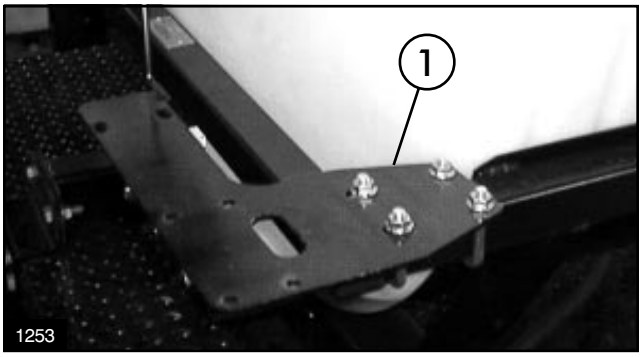

FIG. 7
1. Valve Plate

2. Apply thread sealer and install the 3/4” x 90° elbow and 3/4” x 1” hose barb into the inlet port of the Pressure Adjust Valve. See FIG 8.

NOTE: The arrow on the side of Pressure Adjust Valve indicates direction of flow. Arrow points toward Ratchet Valve.

3. Apply thread sealer and install the 3/4” close nipple, 3/4” tee, 3/4” x 4” nipple, Ratchet Valve and 3/4” x 1” hose barb into the outlet port in the Pressure Adjust Valve.

NOTE: The lever on Ratchet Valve should rest pointing away from Pressure Adjust Valve.

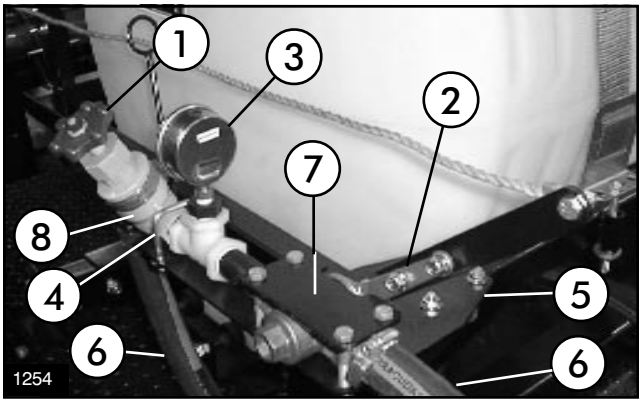

FIG. 8

1. Pressure Adjust Valve
2. Ratchet Valve
3. Pressure Gauge
4. U-Bolt
5. Valve Plate
6. 1” x 44” Hose
7. Valve Plate Top
8. 90° Elbow (Inlet Port)

4. Apply thread sealer and install the 3/4” x 1/4” reducer bushing and Pressure Gauge into the top of tee between the Pressure Adjust Valve and Ratchet Valve.

IMPORTANT! DO NOT overtighten the nuts in steps 5 & 6.

5. Attach Valve Plate Top to Valve Plate over Ratchet Valve, as shown in FIG. 8, using (4) 5/16” x 2-1/2” cap screws and flange nuts.

6. Hook (1) U-Bolt over outlet port of Pressure Adjust Valve and through Valve Bracket. Secure using (2) 5/16” flange nuts. See FIG. 8.

7. Attach other end of the 1” x 44” Hose, (attached to Cross earlier) to the i90° Elbow at nlet port of the Pressure Adjust Valve. Secure with (1) 1” hose clamp.

8. Secure a 1” x 44” Hose to Hose Barb in Ratchet Valve using (1) 1” hose clamp. Route along Saddle frame toward rear of vehicle.

9. Attach handle to Ratchet Valve using (2) 5/16” x 3/4” cap screws and flange nuts.

10. Attach the Pull Rope to Ratchet Valve handle using 5/16” x 3/4” cap screw and flange nut.

11. Route Pull Rope along L.H. side of operator for ease of actuating Ratchet Valve. Provided are (2) Ring Guides, (2) R-Clamps, (1) Ring Terminal, (1) Pull Rope Handle, (2) 5/16” x 3/4” cap screws and flange nuts. Use as needed to route Pull Rope. See FIG. 9 below and page 18, Items No. 19-23 for Illustration of Pull Rope Assembly.

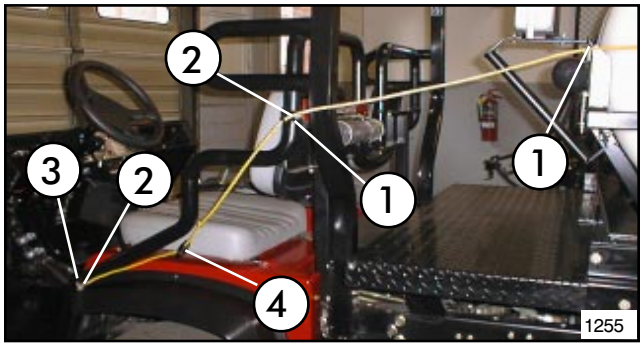

FIG. 9

1. Ring Guides
2. R-Clamps
3. Ring Terminal
4. Pull Rope Handle

BOOM FRAME ASSEMBLY:

1. Apply a heavy coating of grease to the tubes of the two Boom Mount Assemblies and insert them into the Vehicle Frame until Stop Pin bottoms out against Vehicle Frame. (See FIG. 10.)

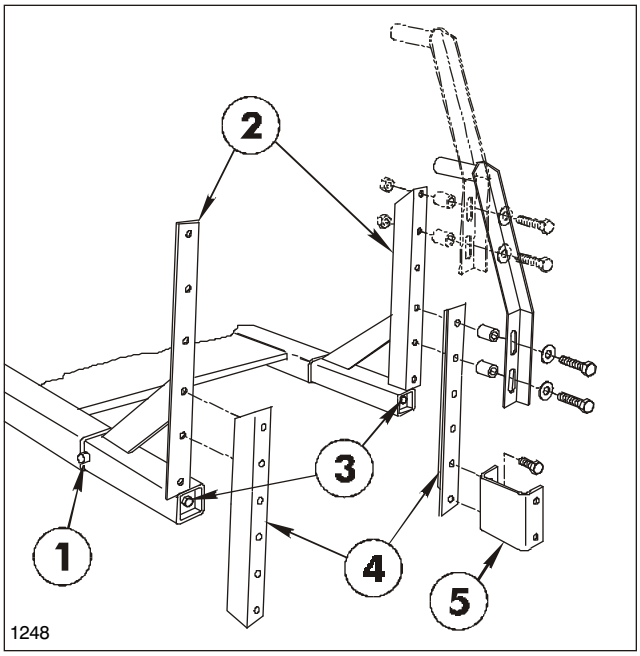

FIG. 10

1. Stop Pin
2. Boom Mount Ass'y.
3. 1/2" x 18" screws
4. Boom Angle
5. Boom Mounting Brackets

2. Using a torque wrench, tighten the 1/2" x 18" screws that join the Wedges to the Boom Mounts. Tighten to 50 ft. lbs (68N-m).

NOTE: Attach the Boom Mounting Brackets so that the bottom surface of the brackets are 20”(508mm) to 30” (762mm) above the ground. If necessary use the (2) Boom Angles to obtain the proper height. FIG. 10.

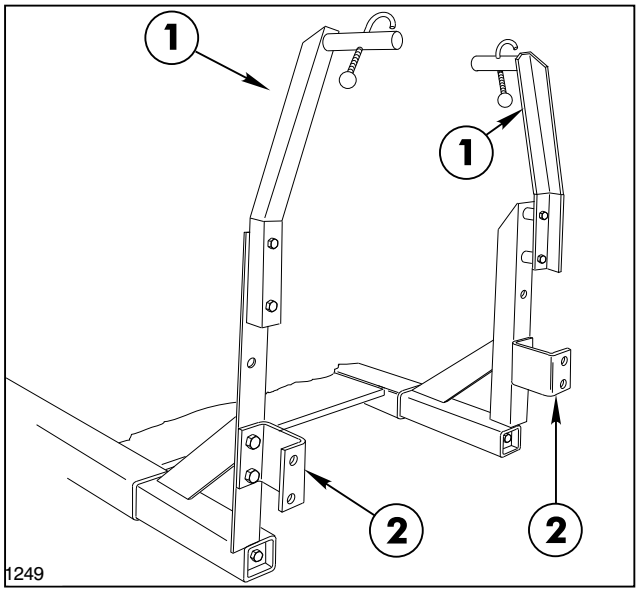

FIG. 11

1. Boom Hold-In Ass'y.
2. Boom Mounting Bracket

3. Attach the (2) "U"-shaped Boom Mounting Brackets to the proper holes in the Boom Mount uprights or Boom Angles with (4) 1/2" x 1-1/4" cap screws, and lock nuts. See FIG. 10 & 11.

4. Install the (2) Boom Hold-In Assemblies to the top of the Boom Mount uprights or Boom Angles using (4) 1/2" x 1-1/4" cap screws, flat washers, spacer tubes and lock nuts. See FIG. 10 & 11.

5. Position a Spacer Tube between the lugs on each side of the Main Frame tube and between Main Frame and Boom Mounting Brackets. Insert a 1/2" x 3-1/2" cap screw through the lugs and spacers. Secure the Main Frame to the Boom Mounting Brackets with lock nuts. See FIG. 12.

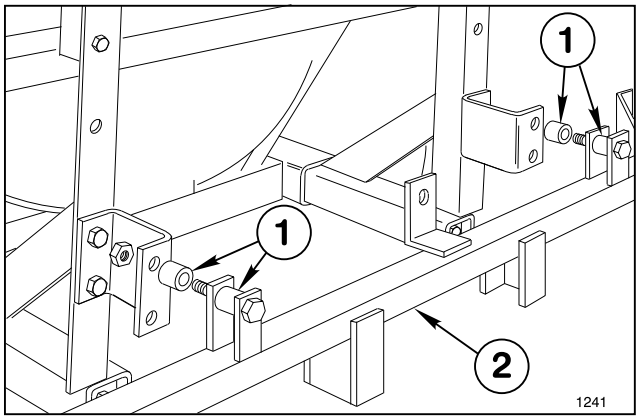

FIG. 12

1. Spacer Tube
2. Main Frame

6. Position the (2) Center Boom Angles on the Main Frame and secure them to the Main Frame tube with (2) square U-bolts, (4) flat washers and hex nuts. See FIG. 13.

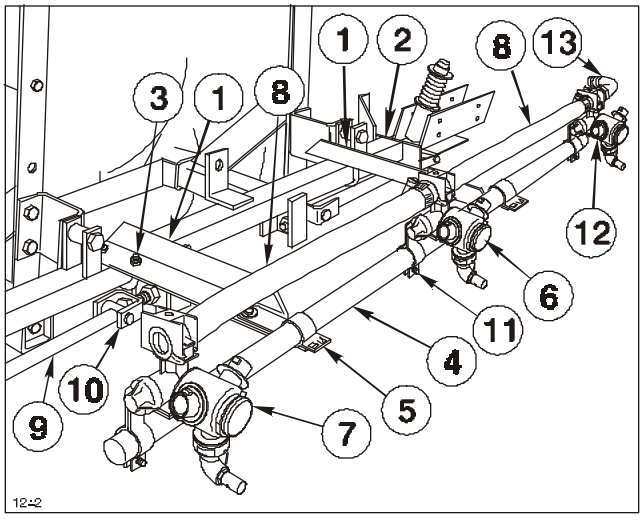

FIG. 13

1. Center Boom Angle
2. Main Frame
3. U-bolt
4. Center Boom Pipe
5. Boom Clamp
6. Double Barb Turret
7. Single Barb Turret
8. Jumper Hose
9. Strut Assembly
10. Adjustable Clevis
11. Turret Body Clamp
12. Threaded Barb Turret
13. 90° Hose Barb

7. Center and attach the Center Boom Pipe to the two Center Boom Angles with (2) clamps, (2) 3/8" x 1" cap screws, flat washers and lock nuts. Once mounted the Center Boom Pipe should be approx. 20" (508mm) to 30" (762mm) from ground.

8. Loosely attach the Double Barb Turret Body with the Turret Body Clamp in the approximate center of the Center Boom Pipe. For the most uniform spray coverage, position all Nozzles level as shown in FIG. 13.

9. Loosely attach a Single Barb Turret Body with the Turret Body Clamp to L.H. end of the Center Boom Pipe. Loosely attach a threaded Turret Body with the Turret Body Clamp to R.H. end of the Center Boom Pipe.

10. Place two Hose Clamps on two 3/4" x 19" Jumper Hoses and connect the two "end" Turret Bodies to the Double Barb Turret Body. Space nozzles 20" apart and tighten fasteners securely. Apply thread sealer and install the 90° 3/4" Hose Barb on the Threaded Turret Body. See FIG. 13.

11. Attach the two Strut Assemblies to the two adjustable clevis found on each side of the Main Frame tube with (2) 1/2" x 2" clevis pins and (2) 1/8" x 1" cotter pins. See FIG. 13.

IMPORTANT! DO NOT overtighten the nuts in steps 12 and 14. The clamping action could crush the Boom Pipe.

12. Insert the plugged end of an Extension Boom Pipe into the L.H. Pivot Assembly and secure with four (4) 1/4" x 1-1/4" cap screws and lock nuts. See FIG. 14. Repeat on the opposite side to assemble the other Extension Boom.

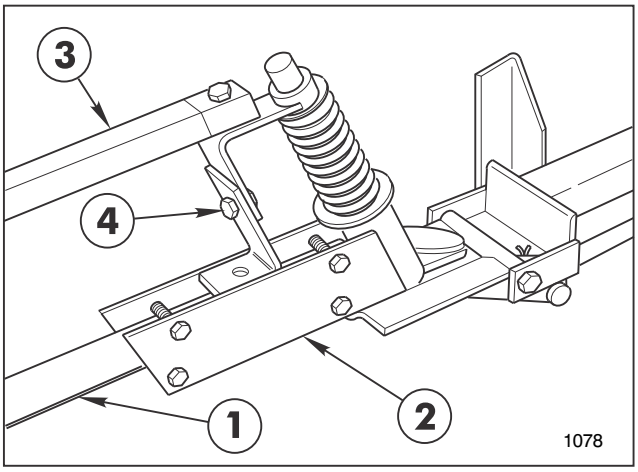

FIG. 14

1. Extension Boom Pipe
2. Pivot Assembly
3. Boom Support Assembly
4. Height Adjustment

13. Attach the L.H. Boom Support Assembly to the L.H. Pivot Assembly, using a 5/16" x 1-1/2" cap screw and lock nut. See FIG. 15 & 16.

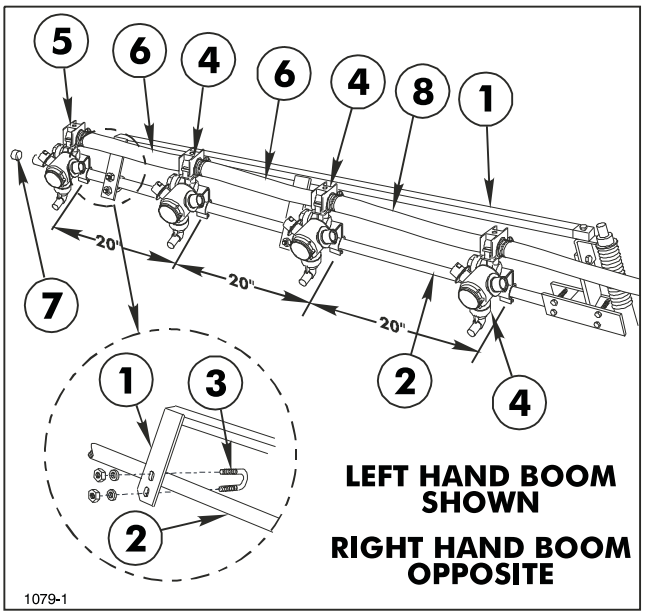

FIG 15

1. Boom Support Ass'y
2. Extension Boom Pipe
3. U-bolt
4. Double Barb Turret
5. Single Barb Turret
6. Jumper Hose 3/4" x 19"
7. Boom Cap
8. Jumper Hose 3/4" x 21"

14. Secure the two plates of the Boom Support Assembly to the Extension Boom Pipe, using two (2) 1/4" U-bolts, (4) lock nuts and flat washers. See FIG. 15.

15. Assemble the RH Boom Support Assembly to the other Extension Boom Pipe.

16. Adjust the Booms to a level position by adjusting the jam nuts on the adjustable clevis assemblies (See FIG. 13) to the desired position, then tighten the end nuts against the Main Frame plate.

17. Attach three Double Barb Turret Bodies and one Single Barb Turret Body with Clamp Assemblies on each Extension Boom Pipe as shown in FIG. 15.

18. Level Nozzles and space 20" apart. Connect the Turret Body Assemblies with 3/4" x 19" Jumper Hoses and a 3/4" x 21" Jumper Hose. Secure with hose clamps. See FIG. 15.

19. Apply thread sealer and install (2) 1" Ball Valves into opposing ports of 1" Cross using (2) 1" Close Nipples. See FIG 16.

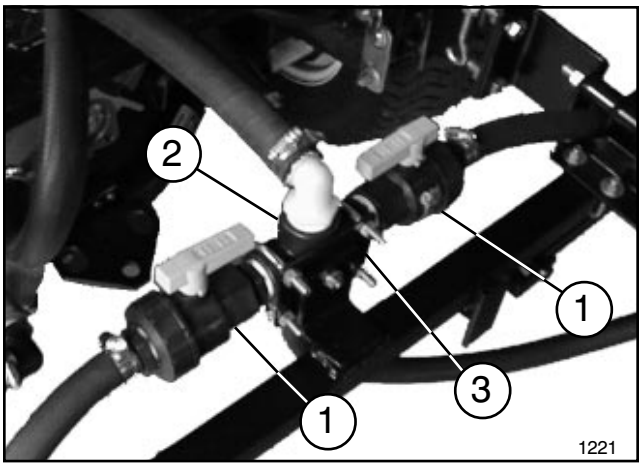

FIG. 16

1. 1" Ball Valve
2. 1" Cross
3. Cross Base

20. Apply thread sealer and install a 1" x 3/4" Hose Barb in the end of both Ball Valves.

21. Apply thread sealer and install 1" x 90° Barbed Elbow in the top port of the Cross.

22. Apply thread sealer and install a 1" x 3/4" Hose Barb in the bottom port of the Cross.

23. Mount Cross Base to Boom Frame using (1) 5/16" x 3/4" carriage bolt and flange nut. See FIG. 16.

IMPORTANT! DO NOT overtighten U-Bolts in step 24. The clamping action could crush the Cross.

24. Mount Cross Assembly to Cross Base, as shown in FIG. 16, using (2) 5/16" U-Bolts and (4) flange nuts. See page 4 FIG. 8.

25. Attach other end of the 1" x 44" Hose attached to Ratchet Valve earlier to the 90° Hose Barb in top of Cross. Secure with (1) 1" hose clamp.

NOTE: When cutting the hoses for the Extension Booms be sure to leave enough hose length to cross Booms.

26. Attach a 3/4” x 50” hose to L.H. Ball Valve and secure with hose clamp. Route hose under Spacer Tube between Boom Frame and Boom Mount toward L.H. Extension Boom. See FIG. 12 & 16. Mark Hose and cut to proper length. Attach hose to Double Barb Turret on inside of L.H. Extension Boom using hose clamp. See FIG 15. Repeat for R.H. Extension Boom.

27. Attach a 3/4” x 50” hose to Hose Barb in bottom of Cross. Route to 90° Hose Barb at R.H. end of Center Boom Pipe. (See FIG. 13) Mark Hose and cut to proper length. Attach hose to 90° Hose Barb using hose clamp.

28. Connect closed end of Turnbuckle to the Lug& Chain using (1) Lap Link. Secure by squeezing Lap Link closed. See FIG. 17.

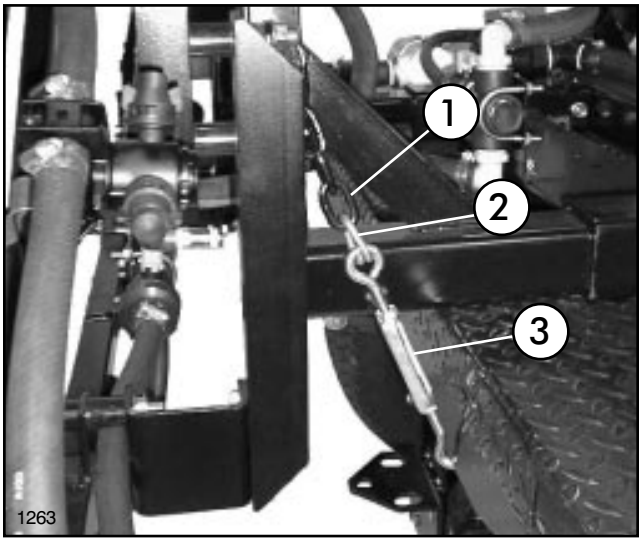

FIG. 17

1. Lug & Chain
2. Lap Link
3. Turnbuckle

29. Attach lug on Turnbuckle Assembly to R.H. Boom Mount Assembly using (1) 1/2” flange nut. Hook other end under Cargo Bed frame and tighten securely.

30. Repeat steps 28 & 29 for L.H. Boom Mount Assembly.

CLEAN WATER WASH TANK:

1. Mount Hold-In Brace and Manual Tube to the right front side of Saddle Assembly using (2) 5/16” x 3/4” cap screws, flat washers, hex nuts, (1) R-Clamp. Tighten securely. See FIG. 18.

NOTE: Left Hold-In Brace and hardware will not be used.

2. Mount Wash Tank Bracket (open end forward) to Hold-In Brace using (2) 5/16" x 1" hex hd. cap screws, flat washers, and hex nuts. Place Clean Water Wash Tank into Wash Tank Bracket and secure with Rubber Hold-Down, as shown in FIG. 18.

NOTE: Tighten all fasteners and hose clamps securely before using the spray system.

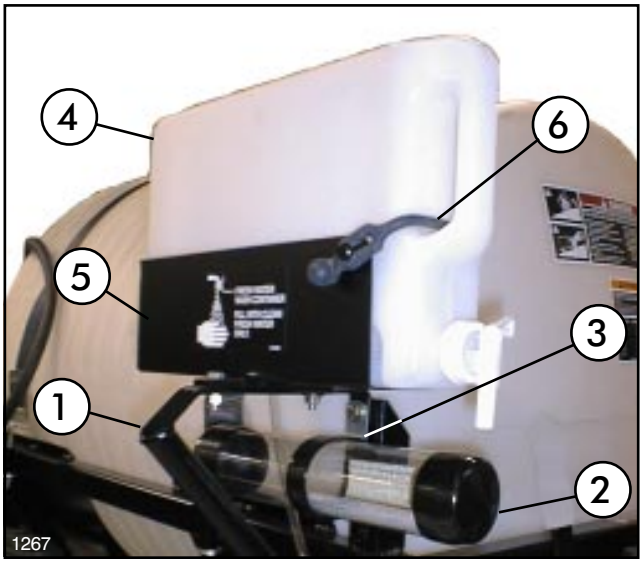

FIG. 18

1. Hold-In Brace
2. Manual Tube
3. R-Clamp
4. Clean Water Wash Tank
5. Wash Tank Bracket
6. Rubber Hold-Down

NOTES:

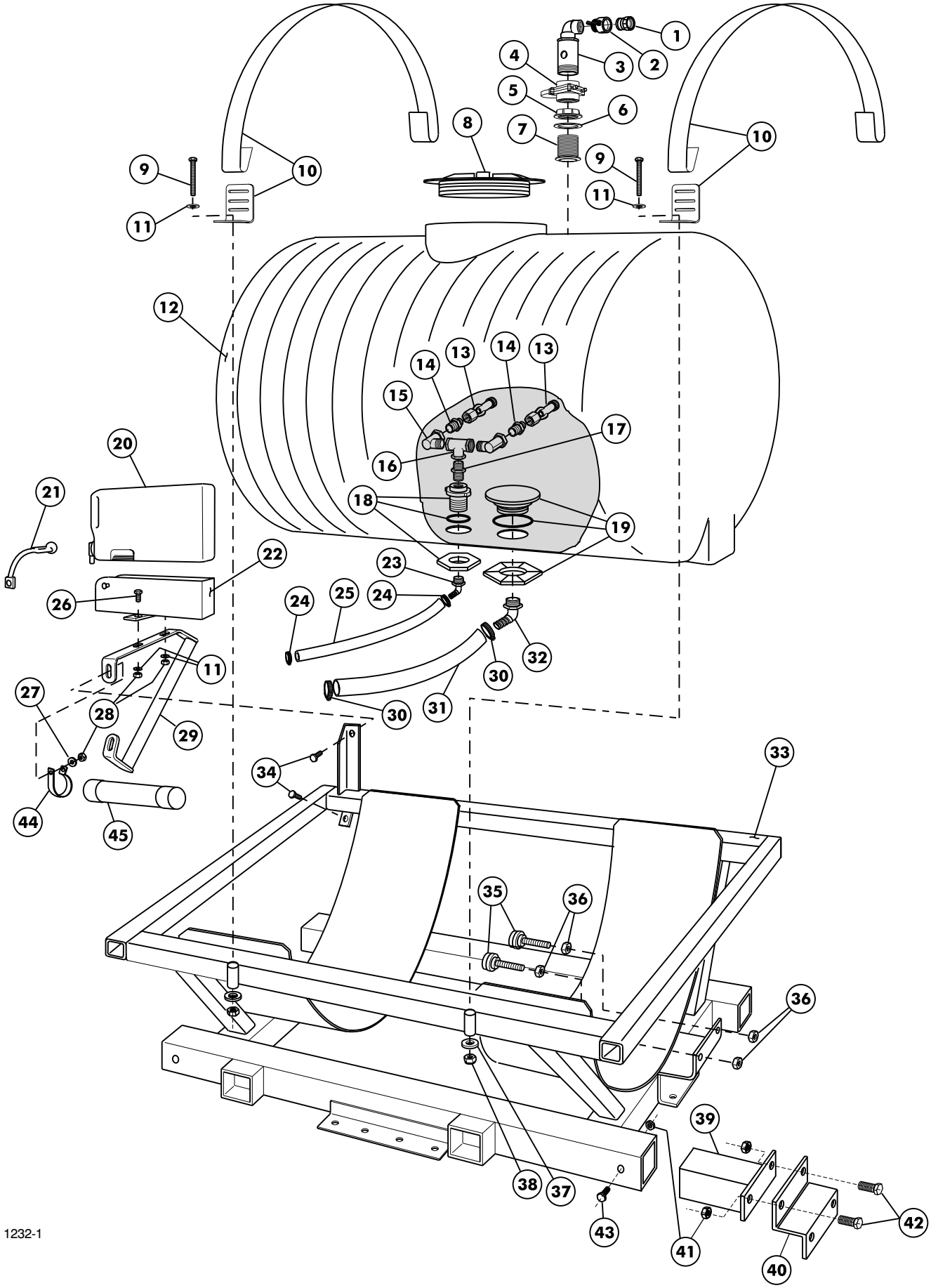
1
2
3
4
5
6
7
8
9
10
11
12
13
14
15
16
17
18
19
20
21
22
23
24
25
26
27
28
29
30
31
32
33
34
35
36
37
38
39
40
41
42
43
44
45
1232-1

TANK AND SADDLE

Ref	Part No.	Description	Qty
1	92-0238	Quick Coupler	1
2	41316	Quick Adapter	1
3	43069	Standup Assembly	1
4	43064	Knife Valve	1
5	43068	Fly Nut, 2" NPT	1
6	43067	Sealing Washer	1
7	43066	Bulk Head, 2" NPT	1
8	92-8412	Tank Cover 10" (f/w Tank Ass'y)	1
	92-8411	Fillwell Ass'y 10" (f/w Tank Ass'y)	1
9	322-19	Hex Hd Cap Screw 5/16" x 4"	4
10	92-8380	Tank Band	2
11	3256-23	Flatwasher, 5/16"	6
12	92-8377	Tank Assembly - 110 Gals.	1
13	92-8392	Jet Agitator	2
14	92-8541	Reducing Nipple 3/4" x 1/2"	2
15	42940	90° Street Elbow 3/4" NPT	2
16	42941	Tee, 3/4"	1
17	41294	Close Nipple, 3/4"	1
18	41801	Tank Fitting, 3/4" (f/w Tank Assy.)	1
19	41798	Anti-Vortex Fitting (f/w Tank Assy.)	1
20	92-3976	Clean Water Wash Tank	1
	93-0828	Spigot (f/w 92-3976 Tank)	1
21	42198	Rubber Hold-Down	1
22	92-3969	Wash Tank Bracket	1
23	92-8413	90° Hose Barb 3/4" MPT x 1/2" HB	1
24	96609	Hose Clamp	2
25	42946	Agitator Hose	1

Ref	Part No.	Description	Qty
26	322-5	Hex Hd Screw 5/16" x 1"	2
27	3256-3	Flatwasher, 5/16"	2
28	3217-6	Hex Nut, 5/16"	4
29	42983	Hold-in Brace Assembly	1
30	41327	Hose Clamp	2
31	95-9142	Suction Hose	1
32	93-0856	90° Elbow 1-1/4" MPT x 1-1/4" HB	1
33	95-9050	Saddle Assembly	1
34	322-3	Hex Hd Cap Scr 5/16" x 3/4"	2
35	92-8367	Tank Bumper	4
36	3218-5	Hex Jam Nut 1/2"	8
37	356303	Washer, 5/16"	4
38	32153-3	Lock Nut, 5/16"	4
39	95-9076	Connector Tube - Welded	4
40	95-9075	Mounting Bracket	4
41	32128-49	Flange Locknut	12
42	325-6	Hex HD Cap Scr 1/2"-13 x 1 1/2"	8
43	325-14	Hex HD Cap Scr 1/2"-13 x 3 1/2"	4
44	42560	R-Clamp	1
45	42559	Tube	1

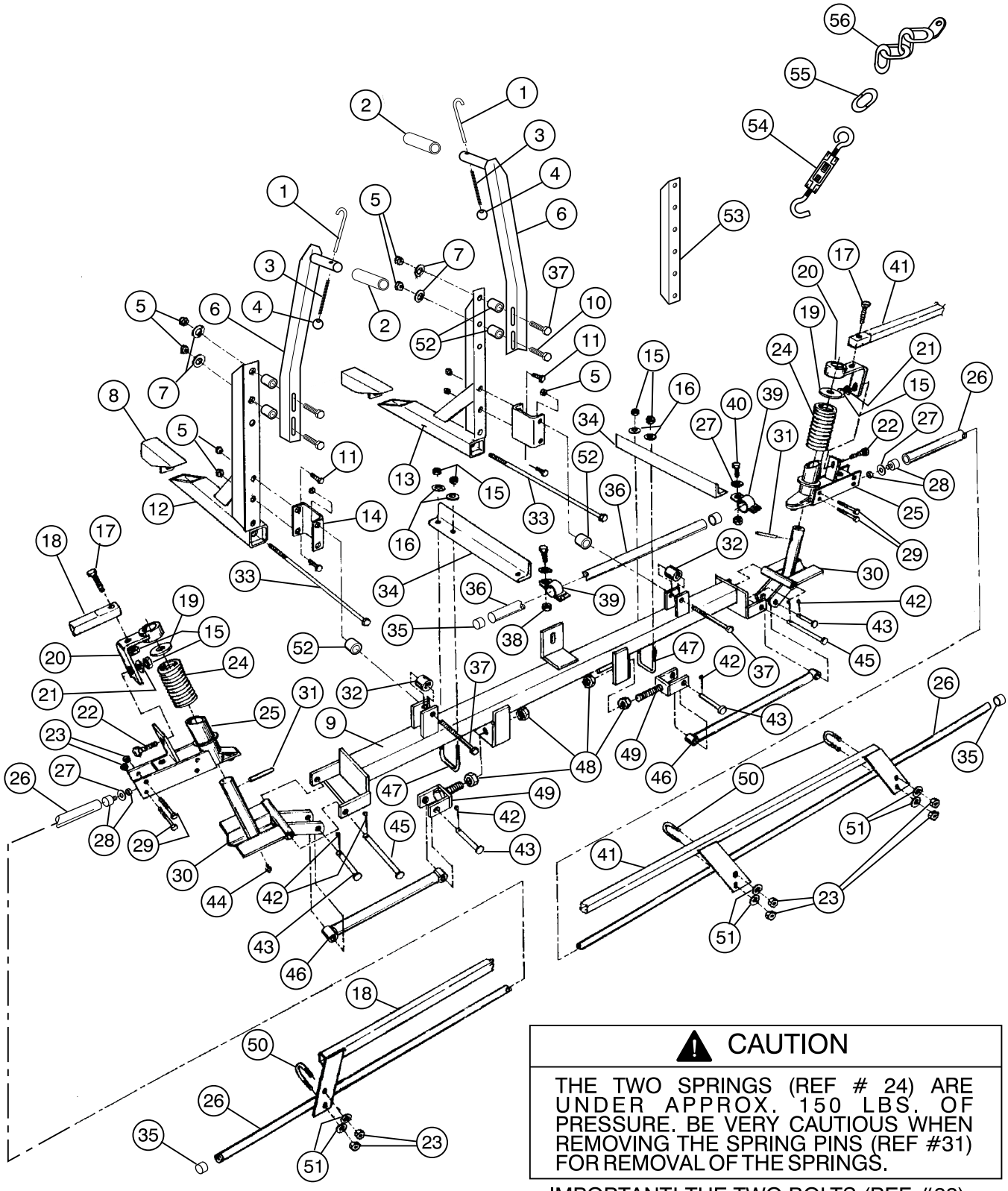

1320

⚠ CAUTION

THE TWO SPRINGS (REF # 24) ARE UNDER APPROX. 150 LBS. OF PRESSURE. BE VERY CAUTIOUS WHEN REMOVING THE SPRING PINS (REF #31) FOR REMOVAL OF THE SPRINGS.

IMPORTANT! THE TWO BOLTS (REF #33) MUST BE TORQUED TO 50 FT. LBS. (68N-m).

SPRAY BOOMS

#	Part No.	Description	Qty
1	92-8562	Hold-in Hook	2
2	92-8561	Hold-in Hose	2
3	92-8563	Hold-in Spring	2
4	92-8564	Hold-in Knob	2
5	32153-5	Hex Nut, 1/2"	6
6	92-8534	Boom Hold-in Assembly	2
7	3256-6	Flat Washer 1/2"	4
8	42223	Tube Wedge Assembly	2
9	42227	Main Frame Tube	1
10	325-10	HHCS, 1/2” x 2-1/2”	2
11	325-6	HHCS, 1/2” x 1-1/2”	4
12	42217	Boom Mount Ass'y L.H.	1
13	42222	Boom Mount Ass'y R.H.	1
14	92-8533	Boom Mounting Brkt.	2
15	3217-6	Hex Nut, 5/16”	14
16	3256-3	Flat Washer, 5/16”	6
17	322-7	HHCS, 5/16” x 1-1/2”	2
18	42711	Boom Support Ass'y L.H.	1
19†	3256-62	Flat Washer 1"	2
20	42707	Support Bracket Ass'y	2
21	3256-23	Flat Washer, 5/16"	6
22	3230-1	Carriage Bolt 5/16” x 3/4”	2
23	32146-17	Lock Nut 1/4”	10
24†	42196	Compression Spring	2
25†	42706	Breakaway Pivot Ass'y	2
26	42282	Extension Boom Pipe Ass'y	2
27	3256-4	Flat Washer 3/8”	4

#	Part No.	Description	Qty
28	92-3749	Freeze Plug	2
29	321-10	HHCS 1/4” x 1-3/4”	8
30†	42243	Hinge Ass'y	2
31†	32121-78	Spring Pin 1/4” x 2”	2
32	42257	Spacer Tube 1"	4
33	42199	HHCS 1/2” x 18”	2
34	42234	Center Boom Angle	2
35	92-8420	Boom Cap	4
36	40493	Center Boom Pipe	1
37	325-14	HHCS 1/2” x 3-1/2”	4
38	32153-2	Lock Nut 3/8”	2
39	40494	Clamp Ass'y	2
40	323-6	HHCS 3/8” x 1”	2
41	42710	Boom Support Ass'y R.H.	1
42	3272-11	Cotter Pin 1/8” x 1”	6
43	42195	Clevis Pin 1/2” x 2”	2
44†	361011	Grease Fitting	2
45	42194	Clevis Pin 1/2” x 4-1/2”	2
46	42240	Strut Ass'y	2
47	301950	U-Bolt 5/16”	2
48	3217-11	Hex Nut 5/8”	4
49	42237	Adjustable Clevis Ass'y	2
50	92-0010	U-Bolt	4
51	3256-2	Flat Washer 1/4”	8
52	42258	Spacer Tube 1-1/4”	4
53	95-9090	Boom Angle	2

† - Denotes parts available in an assembled unit. Order #42840 Breakaway Assembly

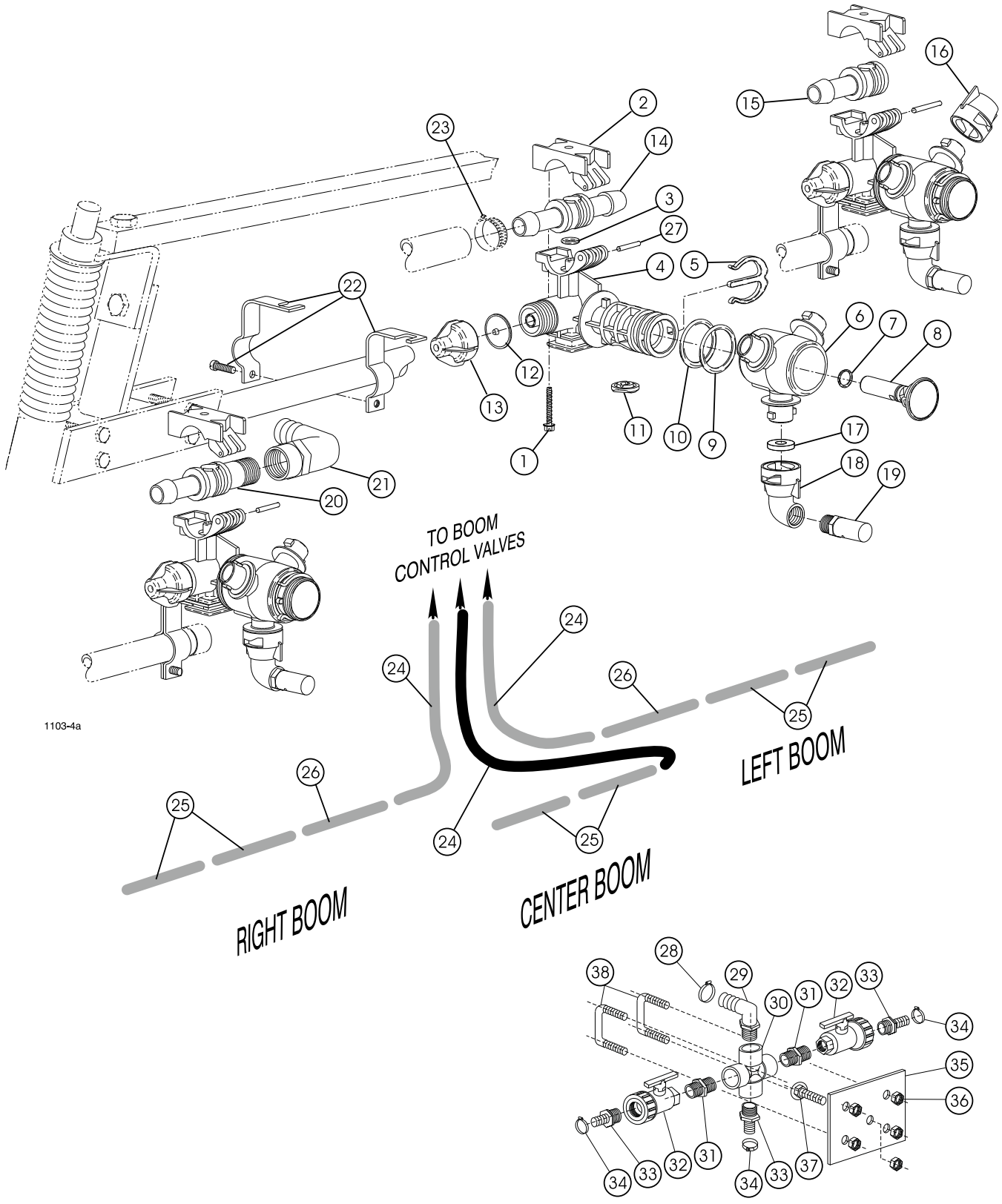
1
2
3
4
5
6
7
8
9
10
11
12
13
14
15
16
17
18
19
20
21
22
23
24
25
26
27
28
29
30
31
32
33
34
35
36
37
38
TO BOOM
CONTROL VALVES
LEFT BOOM
CENTER BOOM
RIGHT BOOM
1103-4a

TURRET BODIES & BOOM HOSES

	Ref	Part No.	Description	Qty
	*	95-9183	Turret Body - Double Barb (Incl. Ref. #'s 1-14)	7
	*	95-9181	Turret Body - Single Barb (Incl. Ref. #'s 1-13 & 15)	3
	*	95-9184	Turret Body - Barb x 1/2 NPT (Incl. Ref. #'s 1-13 & 20)	1
#	1	99-0811	Screw	1
#	2	99-0812	Upper Clamp	1
† #	3	95-9191	O-Ring	1
#	4	95-9192	Split-Eyelet Body	1
#	5	95-9197	E-Clip	1
#	6	95-9196	Turret	1
† #	7	95-9198	O-Ring	1
#	8	95-9200	Plug	1
† #	9	95-9199	O-Ring	1
† #	10	99-0815	O-Ring, Dust Seal	1
† #	11	99-0813	Seal	1
† #	12	41003	Diaphragm	1
#	13	95-9193	End Cap Assembly	1
	14	95-9202	Double Hose Barb	7
	15	95-9201	Single Hose Barb	3
	16	95-9187	Nozzle Dust Cap (Incl. Ref. # 17)	22
	17	40998	Seat Gasket	33

	Ref	Part No.	Description	Qty
	18	95-9186	Nozzle Cap, 90° (Incl. Ref. # 17)	11
	19	95-9188	TTJ10 Turbo TurfJet (Std.)	11
		95-9221	TTJ2 Turbo TurfJet (Optional)	11
		95-9222	TTJ4 Turbo TurfJet (Optional)	11
		95-9223	TTJ5 Turbo TurfJet (Optional)	11
		95-9224	TTJ6 Turbo TurfJet (Optional)	11
		95-9225	TTJ8 Turbo TurfJet (Optional)	11
		95-9226	TTJ15 Turbo TurfJet (Optional)	11
	20	95-9203	Hose Barb x 1/2" NPT	1
	21	95-9314	90° Elbow, 1/2" FPT x 3/4" H.B.	1
	22	95-9185	Turret Body Clamp	11
	23	92-0045	Hose Clamp, 3/4" Hose	22
	24	41340	Boom Hose, 3/4" x 50"	3
	25	40506	Jumper Hose, 3/4 x 19"	6
	26	95-2229	Jumper Hose, 3/4 x 21"	2
#	27	99-0814	Pivot Pin, 303 SS	1
	28	21146	Hose Clamp - 1"	1
	29	41140	Elbow 90° - 1" x 1" HB	1
	30	92-8416	Cross - 1"	1
	31	41304	CLO Nipple - 1"	2
	32	40020	Ball Valve - 1"	2
	33	92-0236	Hose Barb - 1" x 3/4" HB	3
	34	92-0045	Hose Clamp - 3/4"	3
	35	95-9216	Cross Base	1
	36	32128-20	Whizlock Nut - 5/16"	5
	37	3230-1	Carriage Bolt 5/16" x 3/4"	1
	38	92-3723	U-Bolt 5/16" (RD)	2

† Denotes parts in Seal Kit # 99-0816

These parts make up one body assembly

* Not illustrated

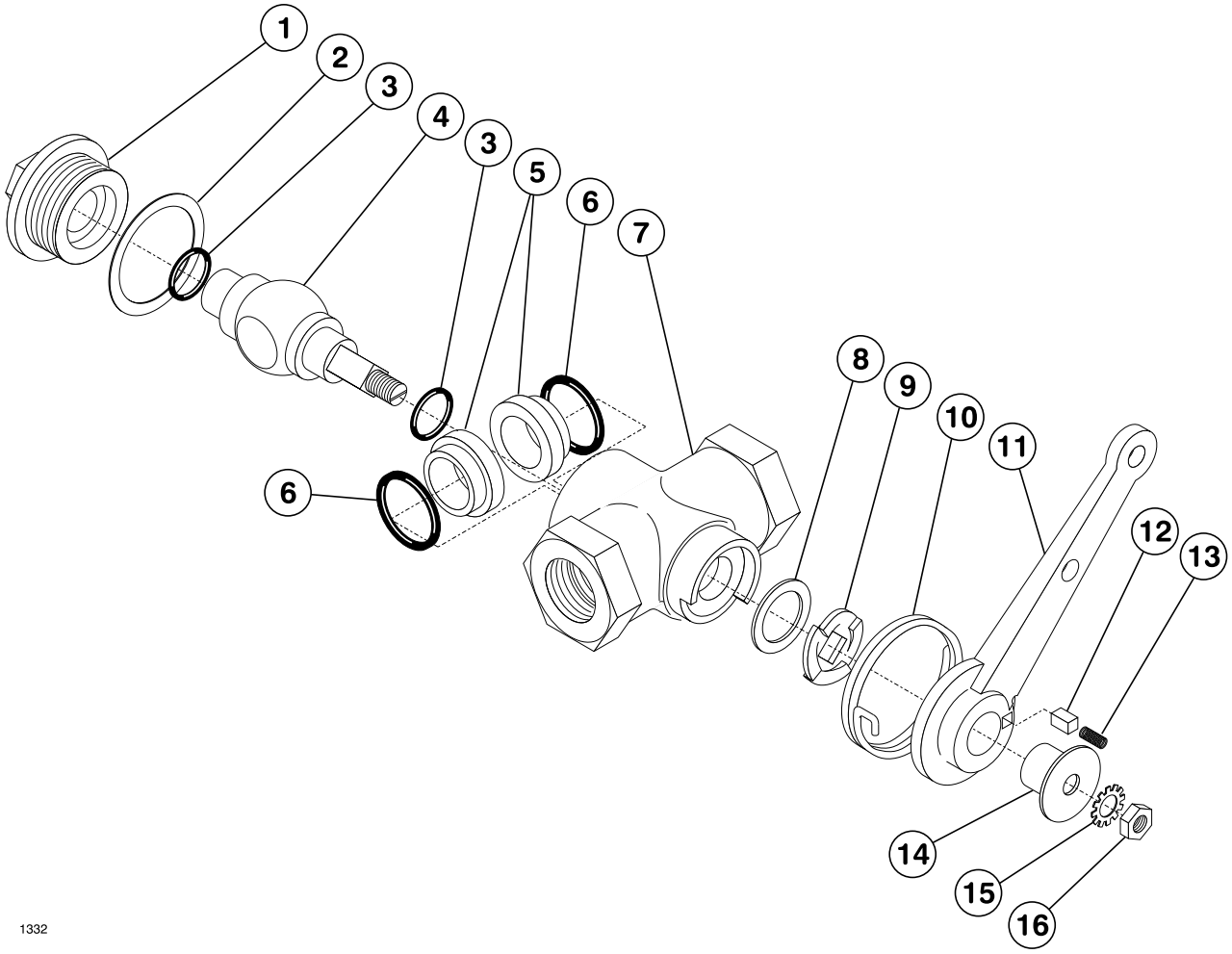

RATCHET VALVE (95-9230)

Ref	Part #	Description	Qty
1	99-0500	Cap	1
2	99-0506	Gasket	1
3	99-0504	O-Ring (Viton)	2
4	99-0499	Ball Stem	1
5	99-0503	Seal	2
6	99-0505	O-Ring (Viton)	2
7	99-0498	Body	1
8	99-0508	Washer	1

Ref	Part #	Description	Qty
9	99-0509	Ratchet Wheel	1
10	99-0507	Torsion Spring	1
11	99-0501	Lever	1
12	99-0512	Pawl	1
13	99-0513	Pawl Spring	1
14	99-0518	Lever Bearing	1
15	99-0511	Shakeproof Washer	1
16	99-0502	Lock Nut	1

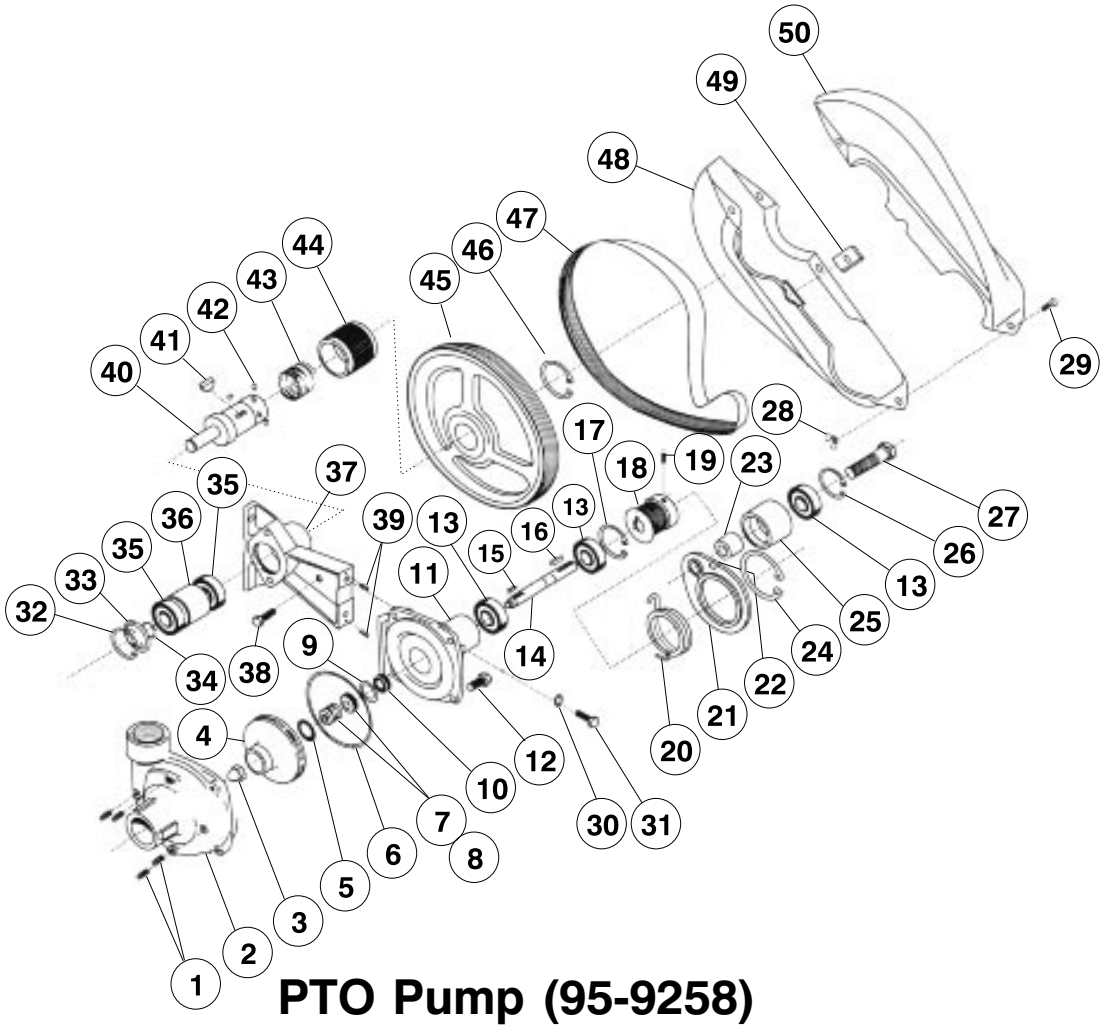

PTO Pump (95-9258)

Ref.	Part No.	Description	Qty.
1	42084	Drain Plug	4
2	94-8503	Pump Casing	1
3	42086	Impeller Nut	1
4	94-8504	Impeller (Poly)	1
5*	93-0931	Gasket	1
6*	42089	O-Ring	1
7*	42088	Mechanical Seal (Vinton)	1
8†	99-0581	Optional Heavy Duty Seal Kit	1
9	93-0924	Seal Retainer	1
10	42092	Slinger Ring	1
11	93-0925	Mounting Flange	1
12	323-6	Hex Hd Cap Scr	4
13	93-0927	Ball Bearing	3
14	94-8505	Pump Shaft	1
15	93-0928	Key	1
16	93-0930	Key	1
17	42093	Bearing Retainer	1
18	95-9371	Driven Pulley	1
19	3246-14	Set Screw	2
20	95-9378	Torsion Spring (Idler)	1
21	95-9372	Idler Bracket	1
22	95-9373	Grease Zerk Fitting	1
23	95-9376	Spacer (Idler Pulley)	1
24	95-9374	Ret. Ring (Idler Bracket)	1
25	95-9375	Idler Pulley	1

Ref.	Part No.	Description	Qty.
26	95-9377	Ret. Ring (Idler Pulley)	1
27	327-7	Hex Hd Cap Scr	1
28	32103-12	Wing Nut	2
29	3229-1	Carriage Bolt	2
30	3253-5	Lock Washer	2
31	323-7	Hex Hd Cap Scr	2
32	95-9363	Bearing Bore Ret. Ring	1
33	95-9362	End Cap	1
34	95-9360	Driver Shaft Brg. Ret. Ring	1
35	95-9359	Driver Shaft Bearing	2
36	95-9361	Bearing Spacer	1
37	95-9358	Pedestal Bracket	1
38	322-6	Hex Hd Cap Scr	1
39	933148	Spring Pin	2
40	95-9367	Shaft (540 Quick Coupler)	1
41	95-9365	Key (Driver Pulley)	1
42	95-9368	Locking Ball	3
43	95--9369	Collar Spring	1
44	95-9370	Collar	1
45	95-9364	Driver Pulley (540 rpm)	1
46	95-9366	Ret. Ring (Driver Pulley)	1
47	95-9382	Poly V-Belt (540 rpm)	1
48	95-9379	Belt Shield	1
49	95-9381	Bracket - Belt Shield	1
50	95-9380	Belt Shield	1

* Denotes parts included in Seal/O-Ring Repair Kit. Order Part No. 94-8520

† Optional Heavy Duty Seal Kit (Inc. 99-0582 Seal & 42089 O-Ring)

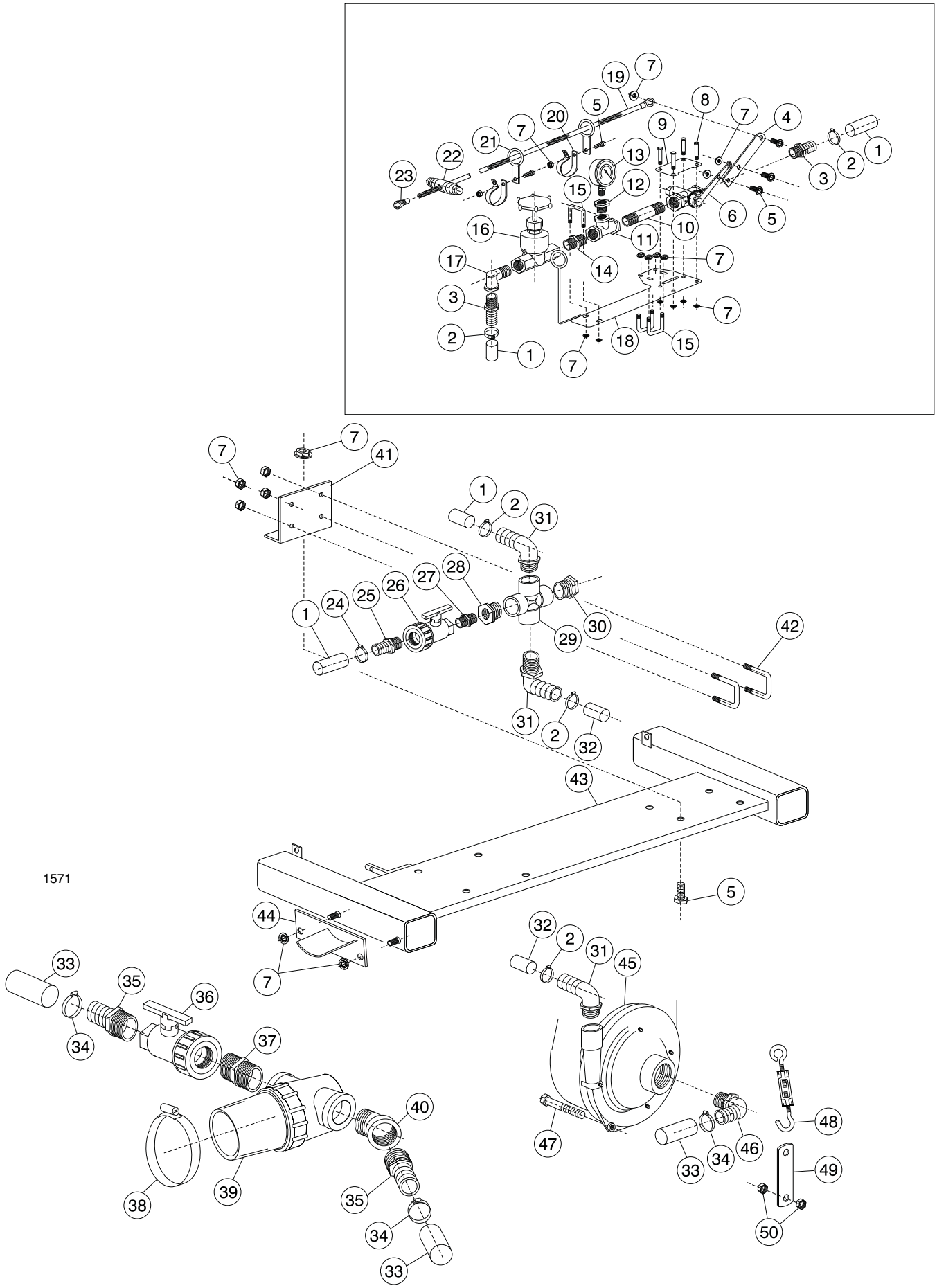
1571

41442 PTO Pump

Ref.	Part No.	Description	Qty.
1	95-9247	Hose 1” x 44”	2
2	21146	Clamp - Hose 1”	5
3	41730	Hose Barb 3/4” MPT x 1” HB	2
4	95-9232	Lever Handle	1
5	3234-5	HHCS Whizlok 5/16” x 3/4”	6
6	95-9230	Valve Ratchet 3/4”	1
7	32128-20	Whizlok Nut 5/16”	22
8	322-12	HHCS 5/16” x 2 1/2”	4
9	95-9220	Plate - Valve (top)	1
10	95-9248	Nipple - 3/4” x 4”	1
11	42941	Tee - 3/4”	1
12	41310	Red Bushing 3/4” x 1/4”	1
13	40485	Guage - Pressure	1
14	41294	Close Nipple - 3/4”	1
15	301950	U-Bolt (Sq)	3
16	95-9235	Valve - Globe	1
17	42940	Elbow St 90° - 3/4”	1
18	95-9277	Valve Plate Ass’y	1
19	95-9325	Pull Rope - 25’	1
20	95-9326	R-Clamp	2
21	95-9286	Ring Guide	2
22	95-9327	Handle - Pull Rope	1
23	94012	Terminal	1
24	96609	Clamp - Hose 1/2”	1
25	92538	Hose Barb - 1/2” x 1/2” HB	1

Ref.	Part No.	Description	Qty.
26	40192	Ball Valve 1/2”	1
27	41314	Close Nipple 1/2”	1
28	41306	Red Bushing 1” x 1/2”	1
29	92-8416	Cross - 1”	1
30	41315	Plug - 1”	1
31	41140	Elbow 90° - 1” x 1” HB	3
32	93-0881	Hose - 1” x 24”	1
33	95-9142	Hose - Suction 36”	1
34	41327	Clamp - Hose 1 1/4”	4
35	93-0851	Hose Barb -1 1/4” x 1 1/4” HB	2
36	93-0855	Ball Valve - 1 1/4”	1
37	92-0050	Close Nipple - 1 1/4”	1
38	92-0054	Clamp - Hose 3”	1
39	42701	Suction Strainer - 20 Mesh	1
40	93-0897	Elbow - St 45° - 1 1/4”	1
41	95-9259	Base - Cross (Angle)	1
42	92-3723	U-Bolt - 9/16” RD	2
43	95-9058	Eng/Pump Base Welded	1
44	92-0233	Strainer Bracket Ass’y	1
45	95-9258	Pump - Centrifugal PTO	1
46	93-0856	Elbow 90° - 1 1/4” x 1 1/4” HB	1
47	323-57	HHMS 3/8” x 3 1/2”	1
48	95-9298	Turnbuckle - 3/8”	1
49	95-9324	Lug - Connecting	1
50	32153-2	Hex Locknut - 3/8”	2



Helping you put quality into play.™