FORM NO. 95-9095

MODEL NO. 41020-80101 & UP
MODEL NO. 41021-80101 & UP
MODEL NO. 41415-80101 & UP
MODEL NO. 41441-80101 & UP
MODEL NO. 41440-80101 & UP

SET-UP AND PARTS CATALOG

SKID SPRAYER
with the 41441 Centrifugal Pump

SAFETY AND INSTRUCTION DECALS

The following safety and instruction decals are installed on the Standard Spray System. If any become damaged or illegible, replace them. Decals and part numbers are listed below and in the parts catalog. Order replacements from your Authorized Toro Distributor.



Part No. 65-3090: Located on Engine Cover Above Pull Rope

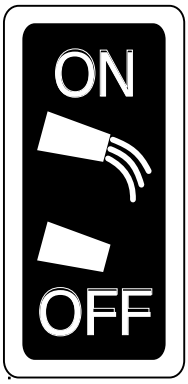

Part No. 041174: Located on Belt Cover



Part No. 95-9320: Located on Front of Tank



Part No. 92-3518: Located on Front of Tank



Part No. 80-9350: Located on Belt Cover



Part No. 93-0800: Located on Side of Clean Water Wash Tank



Part No. 87-0450: Located on Belt Cover



Part No. 93-0688: Located on Lid of Sprayer Tank

©The TORO Company - 1999
All Rights Reserved

NOTES:

Refer to the illustrated Parts List for the details of parts used in assembling the SKID SPRAYER.

Note: "Right" and "Left" as used in the following instructions, refer to the operator's right and left when seated in the normal operating position.

Trailer Mode Set-Up Instructions

SADDLE AND TRAILER:

1. Cut the shipping straps and remove the Spray Tank and Saddle Assembly from the shipping skid.

NOTE: In the following instructions, "thread sealer" refers to Teflon thread tape.

NOTE: The end of the Tank with Safety Decals is the front of Tank and Saddle Assembly when being used in trailer mode.

2. Secure the 1/2" x 42" Agitator Hose to the 90° Barbed Elbow in bottom of Tank using (1) Hose Clamp. Assure that the Barbed Elbow is pointing to the R.H. side of Tank.

3. Apply thread sealer and install the 1-1/4" x 90° Barbed Elbow into the bottom of the Tank so that it is pointing to the R.H. side of tank.

4. Secure the 1-1/4" x 36" Suction Hose to the 90° Barbed Elbow in bottom of Tank using (1) Hose Clamp.

5. Mount the Rear Axle and Tire Assembly to the Saddle Assembly as shown in FIG. 1, using (2) 3/8" x 1-1/4" hex hd. cap screws, lock washers, hex nuts and (4) flat washers on each side of the Saddle Assembly. Torque to 30 ft. lbs (41N-m). Additional holes in Saddle Assembly are for weight transfer adjustment.

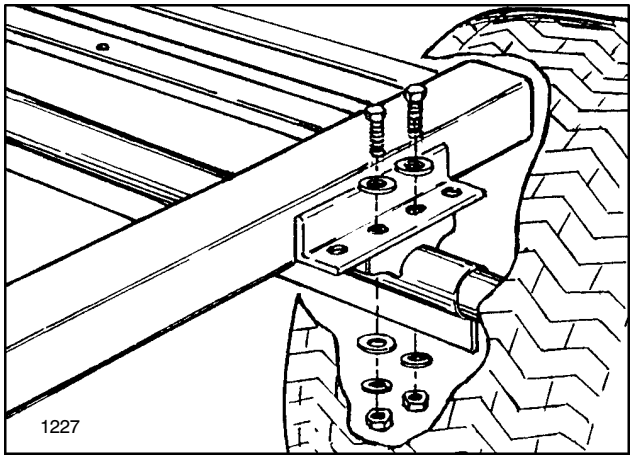

FIG. 1

6. Slide Tongue Adapter through Engine / Pump Base and into Saddle Assembly on end with Safety Decals on Tank. Secure with (4) 1/2" x 3-1/2" hex. hd. cap screws and flange locknuts. See FIG. 2.

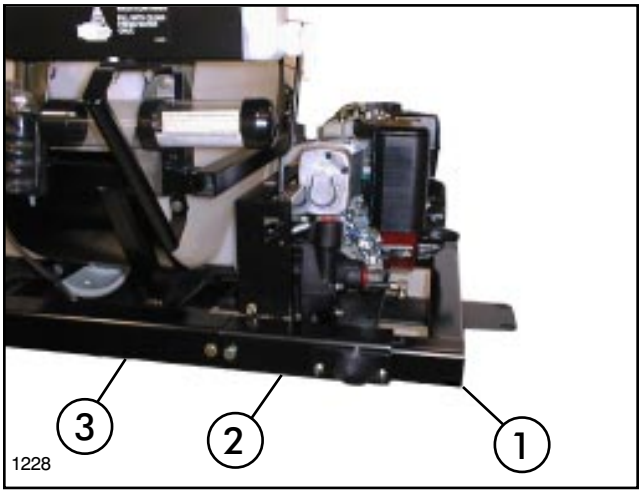

FIG. 2

1. Tongue Adapter
2. Engine / Pump Base
3. Saddle Assembly

7. Mount the Tongue Assembly to the underside of the Tongue Adapter and Skid Frame as shown in FIG. 3, using (6) 1/2" x 1-1/4" hex hd. cap screws, (2) 1/2" x 1-1/2" hex hd. cap screws, (8) flange locknuts. Torque to 75 ft. lbs (102N-m).

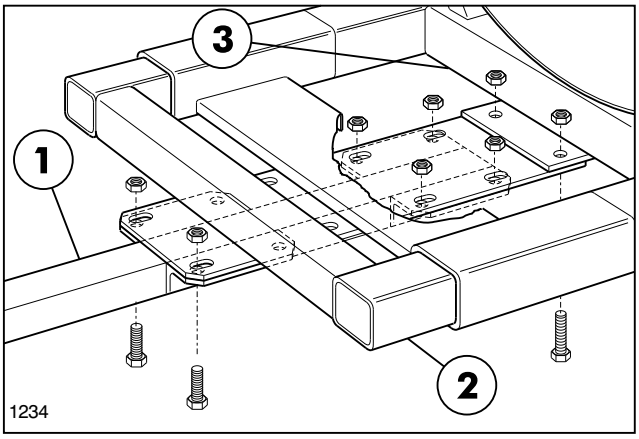

FIG. 3

1. Tongue Assembly
2. Tongue Adapter
3. Saddle Assembly

8. Remove the (2) U-Bolts securing Harness Tube to the Tongue. Discard U-Bolts and Harness Tube they will not be used. See FIG. 4.

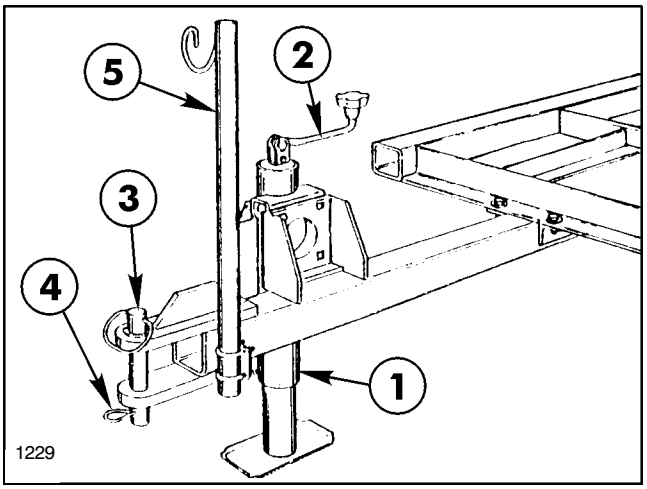

FIG. 4

1. Jack
2. Crank Handle
3. Hitch Pin
4. Cotter Pin
5. Harness Tube

CENTRIFUGAL PUMP:

1. Secure the Strainer Bracket to the front R.H. side of Engine / Pump Base using studs on Engine / Pump Base and (2) 5/16" flange nuts. See FIG. 5.

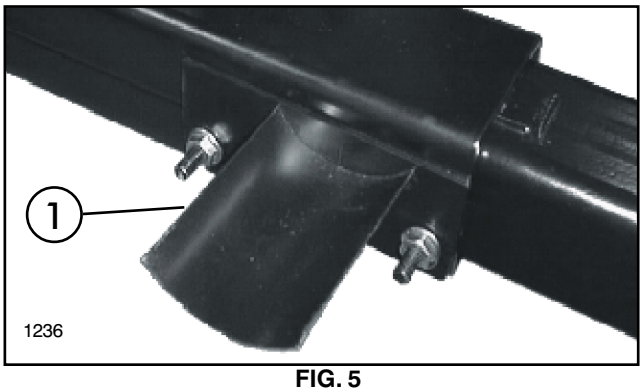

FIG. 5

1. Strainer Bracket

NOTE: The arrow on the top of Suction Strainer indicates direction of flow. The arrow should point away from 1-1/4" Ball Valve.

2. Apply thread sealer and attach the 1-1/4" Ball Valve into the inlet port of the Suction Strainer using (1) 1-1/4" close nipple. See FIG. 6.

3. Apply thread sealer and install a 1-1/4" Hose Barb into both ends of Suction Strainer / Ball Valve Assembly.

4. Secure Suction Strainer to Strainer Bracket using (1) hose clamp.

5. Attach the other end of the 1-1/4" x 36" Suction Hose earlier attached to bottom of Tank to hose barb in Ball Valve. Secure with hose clamp.

6. Apply thread sealer and install a 1-1/4" Hose Barb into suction port in front of Pump.

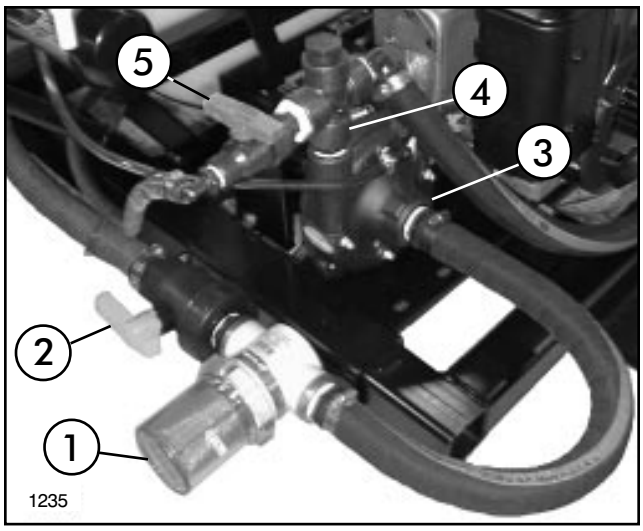

FIG. 6

1. Suction Strainer
2. 1-1/4" Ball Valve
3. Pump
4. Cross
5. 1/2" Ball Valve

7. Connect Suction Strainer and Pump with 1-1/4" x 36" suction hose. Secure with (2) hose clamps.

8. Apply thread sealer and attach the 1" Cross to output port in top of Pump using 1" close nipple.

9. Apply thread sealer and install 1" x 1/2" reducing bushing, 1/2" close nipple, 1/2" Ball Valve and 90° hose barb into R.H. port in Cross. See FIG. 6.

10. Attach the other end of the 1/2" x 42" Agitator Hose earlier attached to bottom of Tank to 90° hose barb in Ball Valve. Secure with 1/2" hose clamp.

11. Apply thread sealer and install 1" plug into top port in Cross. (Port for optional Spray Gun 41022.)

12. Apply thread sealer and install 1" x 90° hose barb in L.H. port in Cross. Secure the 1" x 44" Hose to 90° hose barb using (1) 1" hose clamp. Route other end of hose along Tongue Adapter in front of Engine.

13. Remove the top Pipe Plug from Pump, apply thread sealer and install Bleed Valve into the Pump. See FIG. 7.



FIG. 7

1. Pipe Plug
2. Bleed Valve (open)

14. Drill a 3/4” hole through top of tank between Tank Lid and front Tank Strap. Assemble the Bleed Fitting in hole. See FIG. 8.

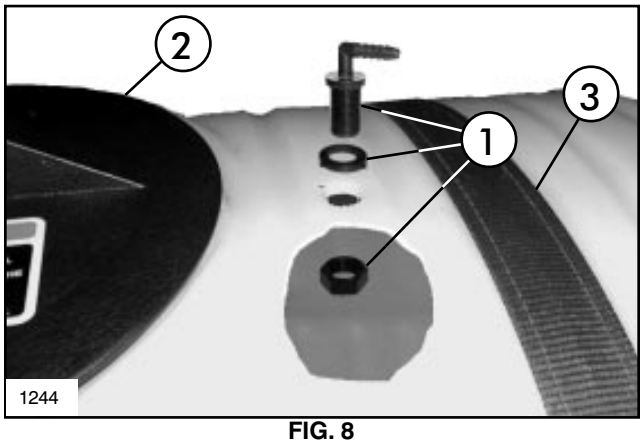

FIG. 8

1. Bleed Fitting
2. Tank Lid
3. Tank Strap

15. Connect Bleed Valve and Bleed Fitting with 1/4” x 54” clear hose. Secure with (2) hose clamps.

NOTE: The hose connecting Bleed Valve and Bleed Fitting must be angled upward the entire length of the hose. Downward dips in the hose will not allow air to escape from pump.

PRESSURE ADJUST AND RATCHET VALVE:

1. Secure Valve Plate to the front bar of the Saddle Assembly using (2) U-Bolts and (4) 5/16” flange nuts. See FIG. 9.

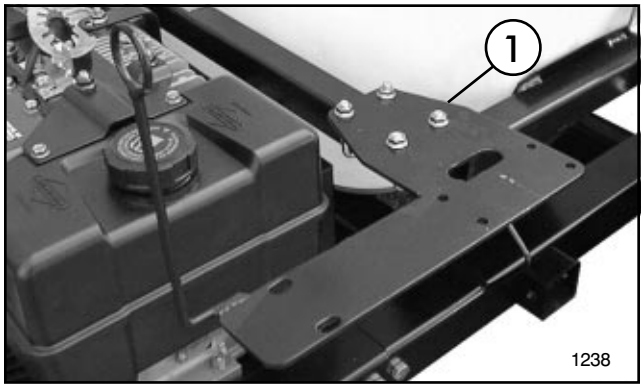

FIG. 9

1. Valve Plate

2. Apply thread sealer and install the 3/4” x 90° elbow and 3/4” x 1” hose barb into the inlet port of the Pressure Adjust Valve. See FIG 10.

NOTE: The arrow on the side of Pressure Adjust Valve indicates direction of flow. Arrow points toward Ratchet Valve.

3. Apply thread sealer and install the 3/4” close nipple, 3/4” tee, 3/4” x 4” nipple, Ratchet Valve and 3/4” x 1” hose barb into the outlet port in the Pressure Adjust Valve.

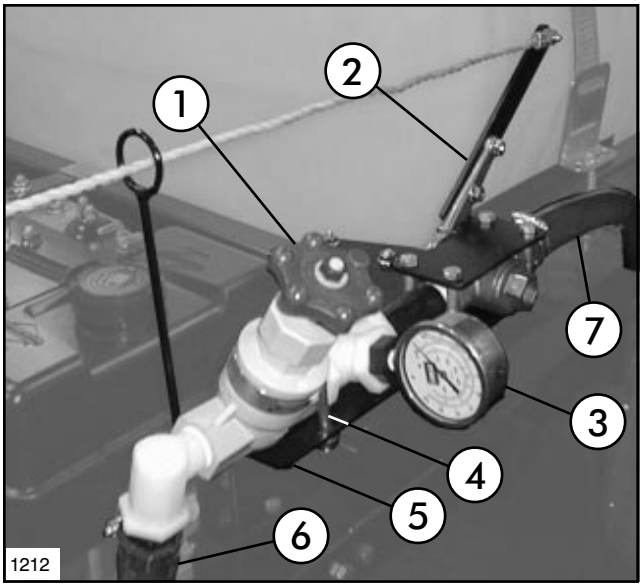

FIG. 10

1. Pressure Adjust Valve
2. Ratchet Valve
3. Pressure Gauge
4. U-Bolt
5. Valve Bracket
6. 1” x 44” Hose
7. 1” x 64” Hose

NOTE: The lever on Ratchet Valve should rest pointing away from Pressure Adjust Valve.

4. Apply thread sealer and install the 3/4” x 1/4” reducer bushing and Pressure Gauge into the top of tee between the Pressure Adjust Valve and Ratchet Valve.

IMPORTANT! DO NOT overtighten the nuts in steps 5 & 6.

5. Attach Valve Plate Top to Valve Plate over Ratchet Valve as, shown in FIG. 10, using (4) 5/16” x 2-1/2” cap screws and flange nuts.

6. Hook (1) U-Bolt over outlet port of Pressure Adjust Valve and through Valve Bracket. Secure using (2) 5/16” flange nuts. See FIG. 10.

7. Attach other end of the 1” x 44” Hose attached to Cross earlier to the inlet port of the Pressure Adjust Valve. Secure with (1) 1” hose clamp.

8. Secure the 1” x 64” Hose to hose barb in Ratchet Valve using (1) 1” hose clamp. Route along Saddle frame toward rear of vehicle.

9. Attach handle to Ratchet Valve using (2) 5/16” x 3/4” cap screws and flange nuts.

10. Attach the Pull Rope to Ratchet Valve handle using 5/16” x 3/4” cap screw and flange nut.

11. Route Pull Rope along L.H. side of operator for ease of actuating Ratchet Valve. Provided are (2) Ring Guides, (2) R-Clamps, (1) Ring Terminal, (1) Pull Rope Handle, (2) 5/16” x 3/4” cap screws and flange nuts. Use as needed to route Pull Rope.

BOOM FRAME ASSEMBLY:

1. Drive the Stop Pin into Boom Mount until flush with surface of tube.

2. Apply a heavy coating of grease to the tubes of the two Boom Mount Assemblies and insert them into the Saddle Assembly until support angle bottoms out against Vehicle Frame. (See FIG. 11.)

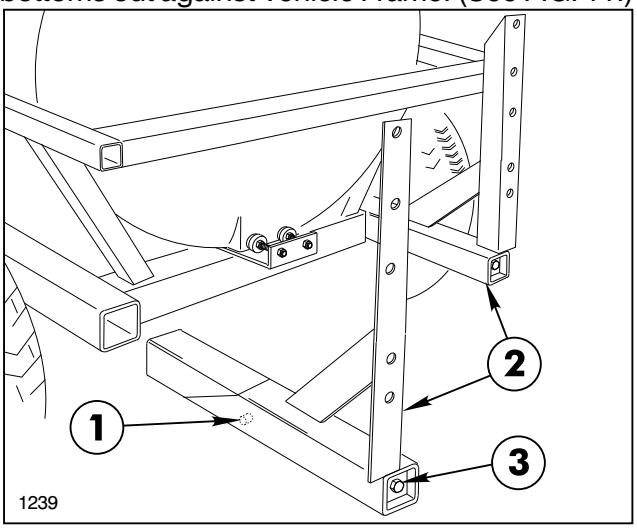

FIG. 11

1. Stop Pin
2. Boom Mount Ass'y.
3. 1/2" x 18" screws

3. Using a torque wrench, tighten the 1/2" x 18" screws that join the Wedges to the Boom Mounts. Tighten to 50 ft. lbs (68N-m).

4. Install the (2) Boom Hold-In Assemblies to the top of the Boom Mount uprights using four (4) 1/2" x 1-1/4" cap screws, flat washers and lock nuts. See FIG. 12,

5. Attach the two "U"-shaped Boom Mounting Brackets to the bottom of the Boom Mount uprights with (4) 1/2" x 1-1/4" cap screws, and lock nuts. (See FIG. 12.)

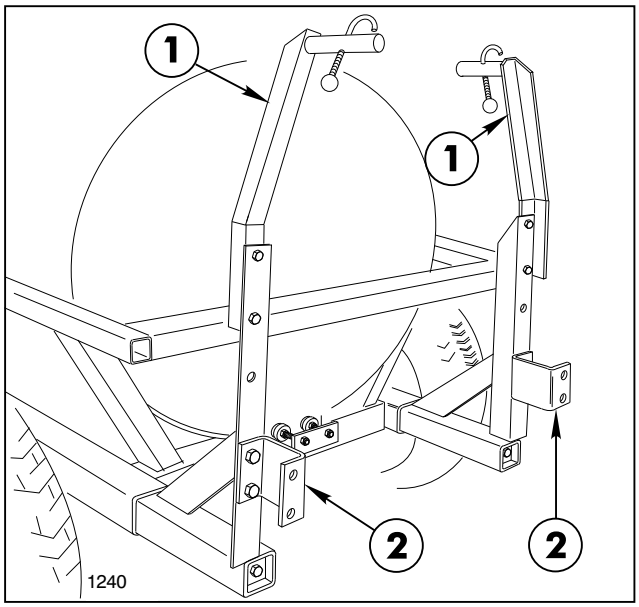

FIG. 12

1. Boom Hold-In Ass'y.
2. Boom Mounting Bracket

6. Position a Spacer Tube between the lugs on each side of the Main Frame tube and between Main Frame and Boom Mounting Brackets. Insert a 1/2" x 3-1/2" cap screw through the lugs and spacers. Secure the Main Frame to the Boom Mounting Brackets with lock nuts. See FIG. 13.

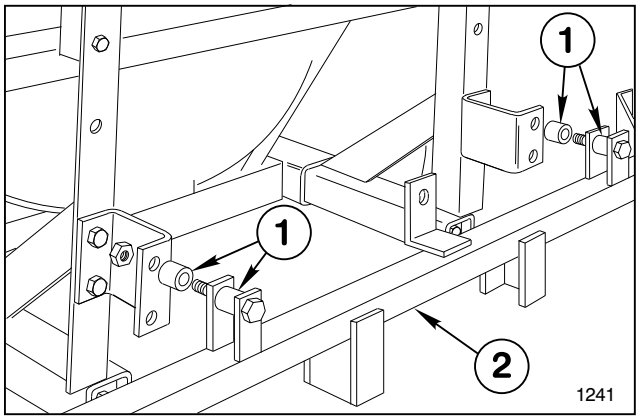

FIG. 13

1. Spacer Tube
2. Main Frame

7. Position the two (2) Center Boom angles on the Main Frame and secure them to the Main Frame tube with (2) square U-bolts, (4) flat washers and hex nuts. See FIG. 14.

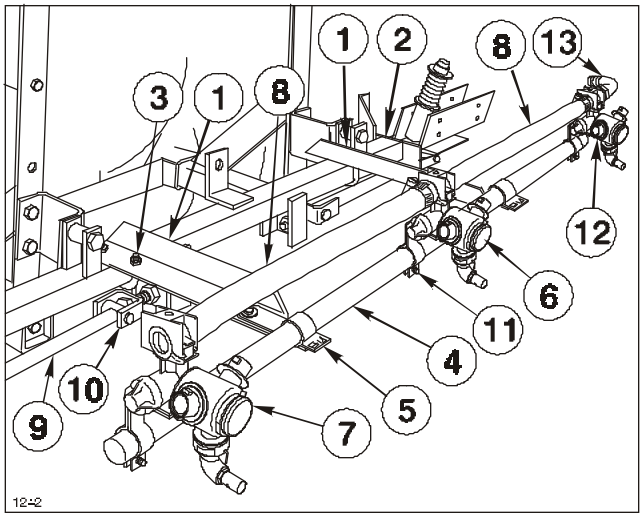

FIG. 13

1. Center Boom Angle
2. Main Frame
3. U-bolt
4. Center Boom Pipe
5. Boom Clamp
6. Double Barb Turret
7. Single Barb Turret
8. Jumper Hose
9. Strut Assembly
10. Adjustable Clevis
11. Turret Body Clamp
12. Threaded Barb Turret
13. 90° Hose Barb

8. Center and attach the Center Boom Pipe to the two Center Boom Angles with two (2) clamps, (2) 3/8" x 1" cap screws, flat washers and lock nuts. Once mounted the Center Boom Pipe should be approx. 20" (508mm) from ground.

9. Loosely attach the Double Barb Turret Body with the Turret Body Clamp in the approximate center of the Center Boom Pipe. For the most uniform spray coverage, position all Nozzles level as shown in FIG. 14.

10. Loosely attach a Single Barb Turret Body with the Turret Body Clamp to L.H. end of the Center Boom Pipe. Loosely attach a threaded Turret Body with the Turret Body Clamp to RH end of the Center Boom Pipe.

11. Place two Hose Clamps on two 3/4" x 19" Jumper Hoses and connect the two "end" Turret Bodies to the Double Barb Turret Body. Space nozzles 20" (508mm) apart and tighten fasteners securely. Apply thread sealer and install the 90° 3/4" Hose Barb on the Threaded Turret Body. See FIG. 14.

12. Attach the two Strut Assemblies to the two adjustable clevis' found on each side of the Main Frame tube with two (2) 1/2" x 2" clevis pins and two (2) 1/8" x 1" cotter pins. See FIG. 14.

IMPORTANT! DO NOT overtighten the nuts in steps 13 and 15. The clamping action could crush the Boom Pipe.

13. Insert the plugged end of an Extension Boom Pipe into the Pivot Assembly and secure with four (4) 1/4" x 1-1/4" cap screws and lock nuts. See FIG. 15. Repeat on the opposite side to assemble the other Extension Boom.

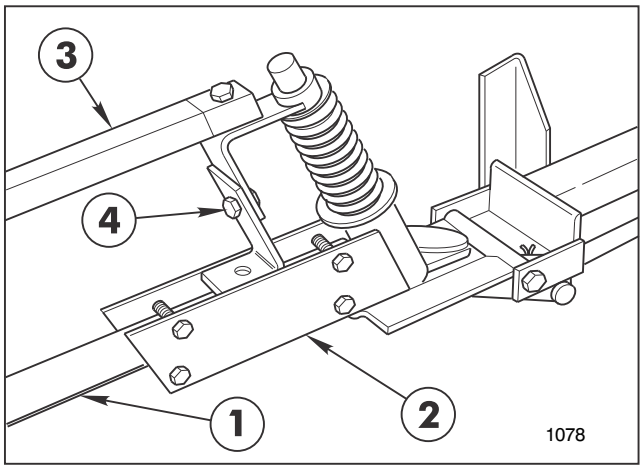

FIG. 15

1. Extension Boom Pipe
2. Pivot Assembly
3. Boom Support Assembly
4. Height Adjustment

14. Attach the L.H. Boom Support Assembly to the Pivot Assembly, using a 5/16" x 1-1/2" cap screw and lock nut. See FIG. 15 & 16.

15. Secure the two plates of the Boom Support Assembly to the Extension Boom Pipe, using two (2) 1/4" U-bolts, four (4) lock nuts and flat washers. See FIG. 16.

16. Assemble the RH Boom Support Assembly to the other Extension Boom Pipe.

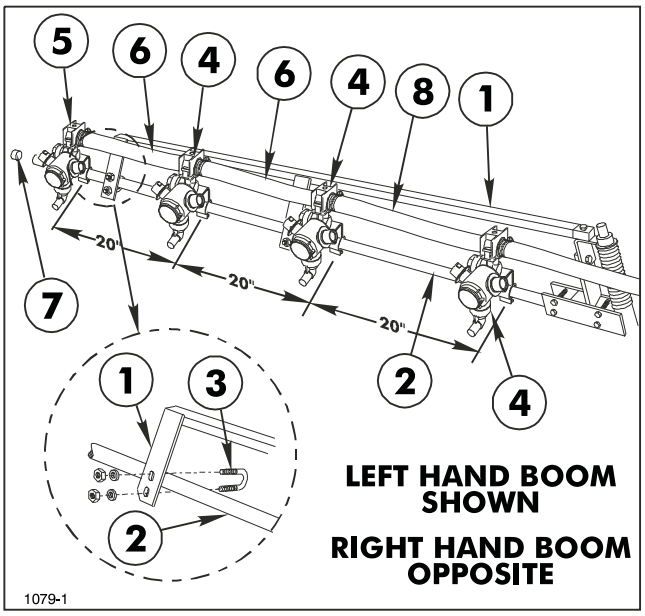

FIG 16

1. Boom Support Ass'y
2. Extension Boom Pipe
3. U-bolt
4. Double Barb Turret
5. Single Barb Turret
6. Jumper Hose 3/4" x 19"
7. Boom Cap
8. Jumper Hose 3/4" x 21"

17. Adjust the Booms to a level position by adjusting the jam nuts on the adjustable clevis assemblies (See FIG. 14) to the desired position, then tighten the end nuts against the Main Frame plate.

18. Attach three Double Barb Turret Bodies and one Single Barb Turret Body with Clamp Assemblies on each Extension Boom Pipe as shown in FIG. 16.

19. Level Nozzles and space 20" (508mm) apart. Connect the Turret Body Assemblies with (2) 3/4" x 19" Jumper Hoses and (1) 3/4" x 21" Jumper Hose. Secure with hose clamps. See FIG. 16.

20. Apply thread sealer and install (2) 1" Ball Valves into opposing ports of 1" Cross using (2) 1" Close Nipples. See FIG 17.

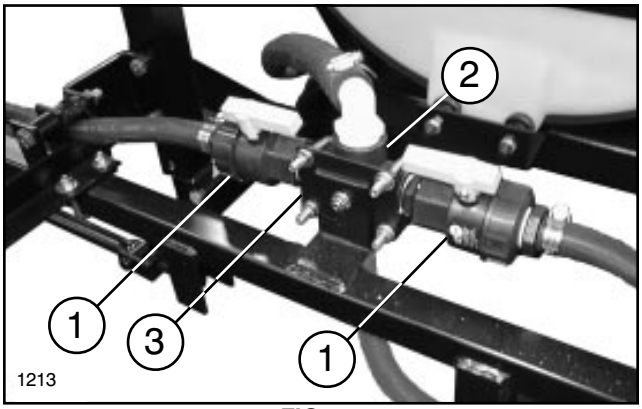

FIG. 17

1. 1" Ball Valve
2. 1" Cross
3. Cross Base

21. Apply thread sealer and install a 1" x 3/4" Hose Barb in the end of both Ball Valves.

22. Apply thread sealer and install 1" x 90° Barbed Elbow in the top port of the Cross.

23. Apply thread sealer and install a 1" x 3/4" Hose Barb in the bottom port of the Cross.

24. Mount Cross Base to Boom Frame using (1) 5/16" x 3/4" carriage bolt and flange nut. See FIG. 17.

IMPORTANT! DO NOT overtighten U-Bolts in step 25. The clamping action could crush the Cross.

25. Mount Cross Assembly to Cross Base, as shown in FIG. 17, using (2) 5/16" U-Bolts and (4) flange nuts.

26. Attach other end of the 1" x 64" Hose attached to Ratchet Valve earlier to the 90° Hose Barb in top of Cross. Secure with (1) 1" hose clamp.

NOTE: When cutting the hoses for the Extension Booms be sure to leave enough hose length to cross Booms.

27. Attach a 3/4" x 50" hose to L.H. Ball Valve and secure with hose clamp. Route hose under Spacer Tube between Boom Frame and Boom Mount toward L.H. Extension Boom. See FIG. 13 & 17. Mark Hose and cut to proper length. Attach hose to Double Barb Turret on inside of L.H. Extension Boom using hose clamp. See FIG 16. Repeat for R.H. Extension Boom.

28. Attach a 3/4" x 50" hose to Hose Barb in bottom of Cross. Route to 90° Hose Barb at R.H. end of Center Boom Pipe. (See FIG. 14) Mark Hose and cut to proper length. Attach hose to 90° Hose Barb using hose clamp.

CLEAN WATER WASH TANK:

1. Mount Hold-In Brace and Manual Tube to the right front side of Saddle Assembly using (2) 5/16" x 3/4" cap screws, flat washers, hex nuts and (1) R-Clamp. Tighten securely. See FIG. 18.

NOTE: Left Hold-In Brace and hardware will not be used.

2. Mount Wash Tank Bracket (open end forward) to Hold-In Brace using (2) 5/16" x 1" hex hd. cap screws, flat washers, and hex nuts. Place Clean Water Wash Tank into Wash Tank Bracket and secure with Rubber Hold-Down, as shown in FIG. 18.

NOTE: Tighten all fasteners and hose clamps securely before using the spray system.

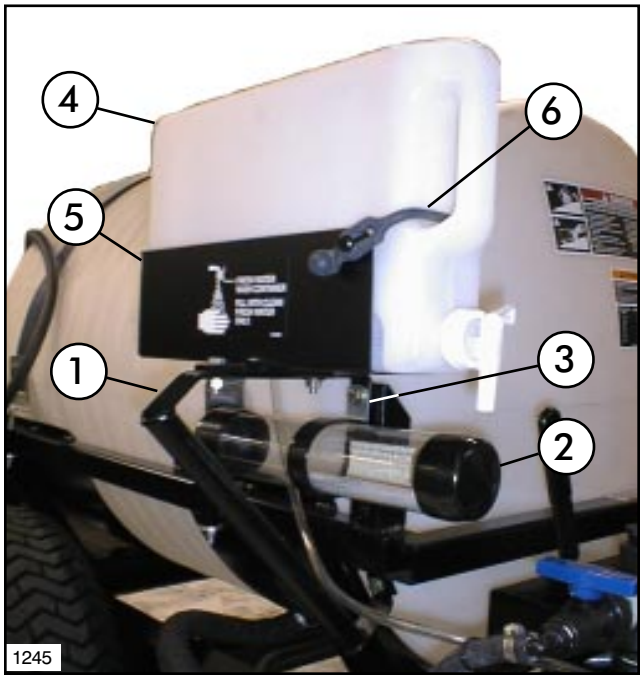

FIG. 18

1. Hold-In Brace
2. Manual Tube
3. R-Clamp
4. Clean Water Wash Tank
5. Wash Tank Bracket
6. Rubber Hold-Down

Skid Mode Set-Up Instructions

NOTE: The following instructions are for installing the 110 Gallon Skid Sprayer on a Workman Vehicle. If installing on a different vehicle some modification may be necessary.

SADDLE AND SKID:

1. Cut the shipping straps and remove the Spray Tank and Saddle Assembly from the shipping skid.

NOTE: In the following instructions, "thread sealer" refers to Teflon thread tape.

NOTE: The end of the Tank with Safety Decals is the L.H. side of Tank and Saddle Assembly when being used in skid mode.

2. Secure the 1/2" x 42" Agitator Hose to the 90° Barbed Elbow in bottom of Tank using (1) Hose Clamp. Assure that the Barbed Elbow is pointing to the front of Tank.

3. Apply thread sealer and install the 1-1/4" x 90° Barbed Elbow into the bottom of the Tank so that it is pointing to the front of tank.

4. Secure the 1-1/4" x 36" Suction Hose to the 90° Barbed Elbow in bottom of Tank using (1) Hose Clamp.

5. Set the Tank Saddle Assembly on the bed of the transport vehicle with the Safety Decals on the Tank to the L.H. side of vehicle.

6. Slide the (4) Connector Tubes into the Saddle Assembly. Secure with (4) 1/2" x 3-1/2" cap screws and flange nuts. See FIG. 1.

7. Secure the (4) Mounting Brackets to Connector Tubes using (8) 1/2" x 1-1/2" cap screws and flange nuts.

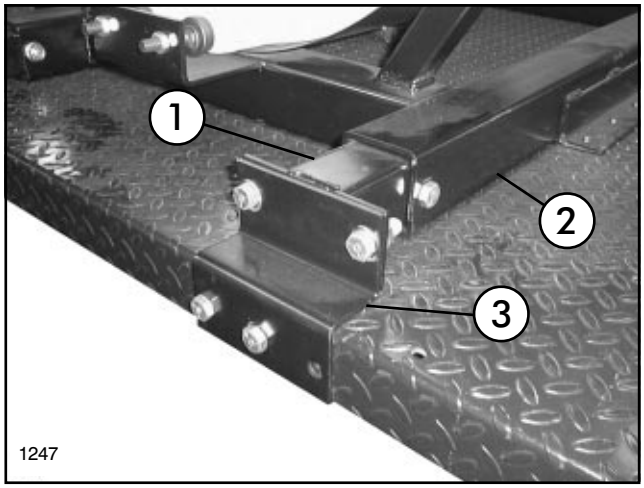

FIG. 1

1. Connector Tubes
2. Saddle Assembly
3. Mounting Brackets

NOTE: If installing the Skid Sprayer on a vehicle other than the Workman use the dimensions below as a general guideline. Be sure that the Tank is as far in front of the rear axle as possible.

8. Locate the Saddle Assembly on Cargo Bed, as shown in FIG. 2. Use holes in Mounting Brackets to drill (2) 17/32" diameter holes per Mounting Bracket.

IMPORTANT! Before drilling any holes check the location of crossmembers in the Cargo Bed. Location of the crossmembers will determine which two of the three holes in each of the Mounting Brackets you use.

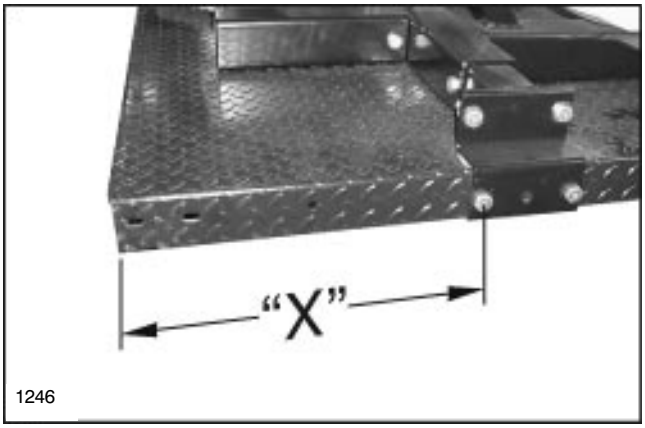

FIG. 2

Full & 2/3 Cargo Bed X = 15.5" (393.7mm)
2/3 Cargo Bed w/side rails X = 13.5" (342.9mm)

9. Attach Mounting Brackets to Cargo Bed using (8) 1/2" x 1-1/2" cap screws and flange nuts. See FIG. 1 & 2.

10. Slide the Engine / Pump Base on to the mount tubes on the rear of the Saddle Assembly. Secure using (2) 1/2" x 3-1/2" cap screws and flange nuts. See FIG. 3.

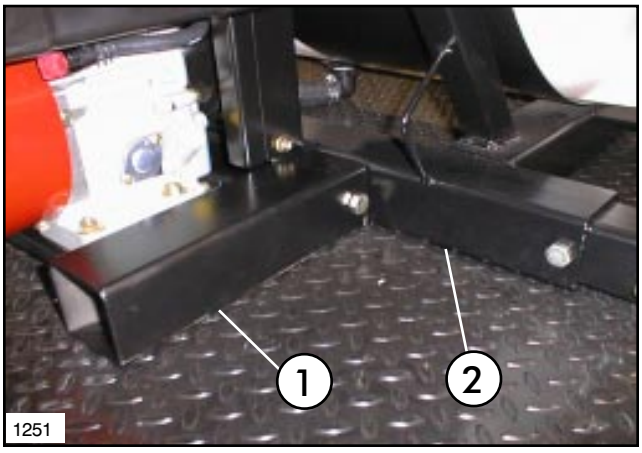

FIG. 3

1. Engine / Pump Base
2. Saddle Assembly

CENTRIFUGAL PUMP:

1. Secure the Strainer Bracket to the rear L.H. side of Engine / Pump Base using studs on Engine / Pump Base and (2) 5/16" flange nuts. See FIG. 4.

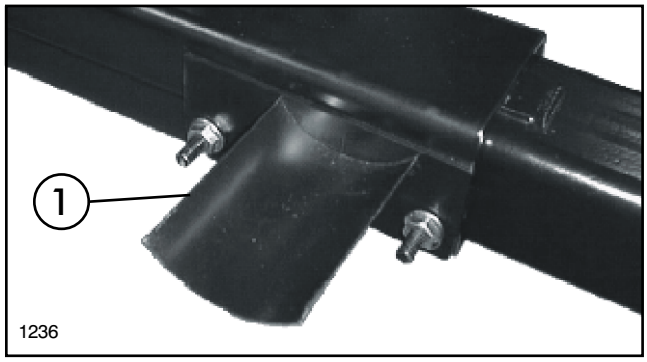

FIG. 4
1. Strainer Bracket

NOTE: The arrow on the top of Suction Strainer indicates direction of flow. The arrow should point away from 1-1/4" Ball Valve.

2. Apply thread sealer and install the 1-1/4" Ball Valve into the inlet port of the Suction Strainer using (1) 1-1/4" close nipple. See FIG. 5.

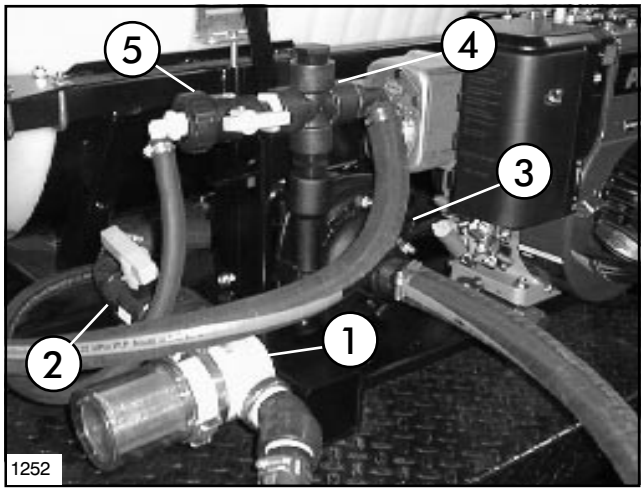

FIG. 5
1. Suction Strainer
2. 1-1/4" Ball Valve
3. Pump
4. Cross
5. 1/2" Ball Valve

3. Apply thread sealer and install a 1-1/4" Hose Barb into the 1-1/4" Ball Valve.

4. Apply thread sealer and install (1) 45° Elbow and 1-1/4" Hose Barb into the outlet port of the Suction Strainer.

5. Secure Suction Strainer to Strainer Bracket using (1) hose clamp.

6. Attach the other end of the 1-1/4" x 36" Suction Hose earlier attached to bottom of Tank to hose barb in Ball Valve. Secure with hose clamp.

7. Apply thread sealer and install a 1-1/4" Hose Barb into suction port in front of Pump.

8. Connect Suction Strainer and Pump with 1-1/4" x 36" suction hose. Secure with (2) hose clamps.

9. Apply thread sealer and attach the 1" Cross to output port in top of Pump using 1" close nipple.

10. Apply thread sealer and install 1" x 1/2" reducing bushing, 1/2" close nipple, 1/2" Ball Valve and 90° hose barb into L.H. port in Cross. See FIG. 5.

11. Attach the other end of the 1/2" x 42" Agitator Hose earlier attached to bottom of Tank to 90° hose barb in Ball Valve. Secure with 1/2" hose clamp.

12. Apply thread sealer and install 1" plug into top port in Cross. (Port for optional Spray Gun 41022.)

13. Apply thread sealer and install 1" x 90° hose barb in R.H. port in Cross. Secure the 1" x 44" Hose to 90° hose barb using (1) 1" hose clamp. Route other end of hose toward front of vehicle along L.H. side.

14. Remove the top Pipe Plug from Pump, apply thread sealer and install Bleed Valve into the Pump. See FIG. 6.

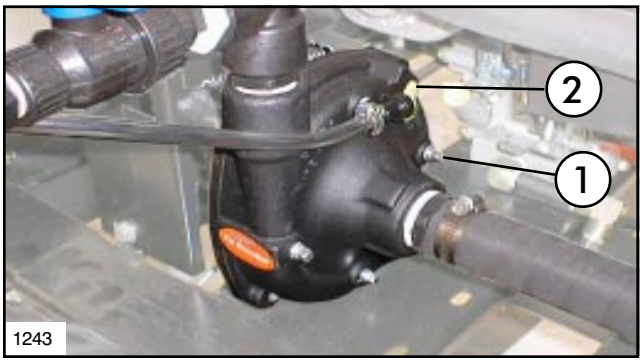

FIG. 6
1. Pipe Plug
2. Bleed Valve (open)

15. Drill a 3/4" hole through top of tank between Tank Lid and L.H. Tank Strap. Assemble the Bleed Fitting in hole. See FIG. 7.

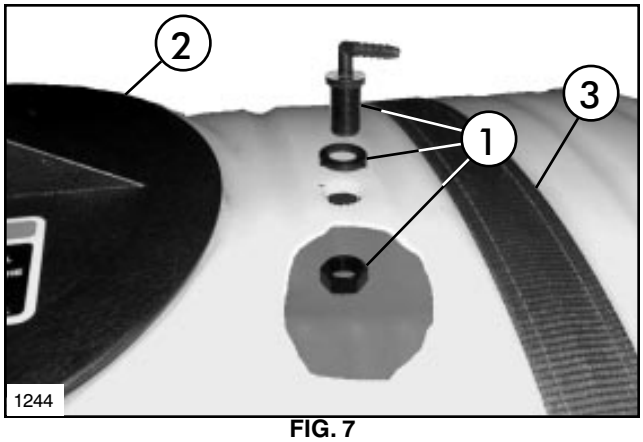

FIG. 7

1. Bleed Fitting
2. Tank Lid
3. Tank Strap

16. Connect Bleed Valve and Bleed Fitting with the 1/4" x 54" clear hose. Secure with (2) hose clamps.

NOTE: The hose connecting Bleed Valve and Bleed Fitting must be angled upward the entire length of the hose. Downward dips in the hose will not allow air to escape from pump.

PRESSURE ADJUST AND RATCHET VALVE:

1. Secure the Valve Plate to the rear bar of the Saddle Assembly using (2) U-Bolts and (4) 5/16" flange nuts. See FIG. 8.

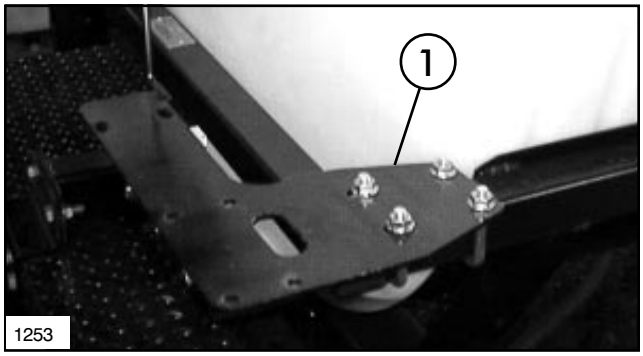

FIG. 8

1. Valve Plate

2. Apply thread sealer and install the 3/4" x 90° elbow and 3/4" x 1" hose barb into the inlet port of the Pressure Adjust Valve. See FIG 9.

NOTE: The arrow on the side of Pressure Adjust Valve indicates direction of flow. Arrow points toward Ratchet Valve.

3. Apply thread sealer and install the 3/4" close nipple, 3/4" tee, 3/4" x 4" nipple, Ratchet Valve and 3/4" x 1" hose barb into the outlet port in the Pressure Adjust Valve.

NOTE: The lever on Ratchet Valve should rest pointing away from Pressure Adjust Valve.

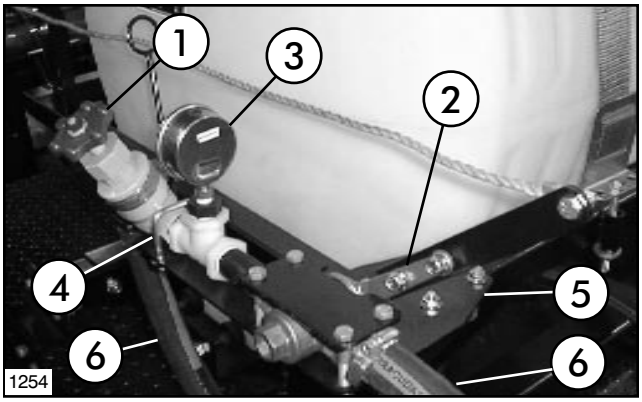

FIG. 9

1. Pressure Adjust Valve
2. Ratchet Valve
3. Pressure Gauge
4. U-Bolt
5. Valve Bracket
6. 1" x 44" Hose

4. Apply thread sealer and install the 3/4" x 1/4" reducer bushing and Pressure Gauge into the top of tee between the Pressure Adjust Valve and Ratchet Valve.

IMPORTANT! DO NOT overtighten the nuts in steps 5 & 6.

5. Attach Valve Plate Top to Valve Plate over Ratchet Valve, as shown in FIG. 9, using (4) 5/16" x 2-1/2" cap screws and flange nuts.

6. Hook (1) U-Bolt over outlet port of Pressure Adjust Valve and through Valve Bracket. Secure using (2) 5/16" flange nuts. See FIG. 9.

7. Attach other end of the 1" x 44" Hose attached to Cross earlier to the inlet port of the Pressure Adjust Valve. Secure with (1) 1" hose clamp.

8. Secure the 1" x 44" Hose to hose barb in Ratchet Valve using (1) 1" hose clamp. Route along Saddle frame toward rear of vehicle.

9. Attach handle to Ratchet Valve using (2) 5/16" x 3/4" cap screws and flange nuts.

10. Attach the Pull Rope to Ratchet Valve handle using 5/16" x 3/4" cap screw and flange nut.

11. Route Pull Rope along L.H. side of operator for ease of actuating Ratchet Valve. Provided are (2) Ring Guides, (2) R-Clamps, (1) Ring Terminal, (1) Pull Rope Handle, (2) 5/16" x 3/4" cap screws and flange nuts. Use as needed to route Pull Rope.



Routing example for Workman Vehicle

BOOM FRAME ASSEMBLY:

1. Apply a heavy coating of grease to the tubes of the two Boom Mount Assemblies and insert them into the Vehicle Frame until Stop Pin bottoms out against Vehicle Frame. (See FIG. 10.)

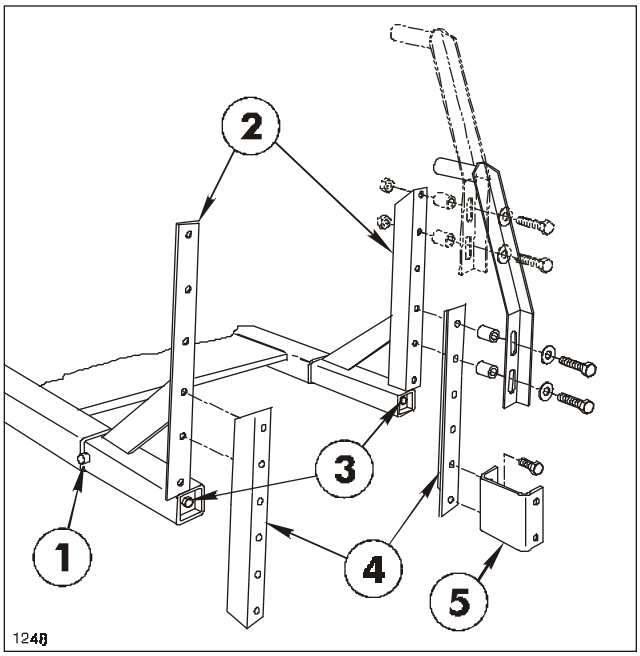

FIG. 10

1. Stop Pin
2. Boom Mount Ass'y.
3. 1/2" x 18" screws
4. Boom Angle
5. Boom Mounting Brackets

3. Using a torque wrench, tighten the 1/2" x 18" screws that join the Wedges to the Boom Mounts. Tighten to 50 ft. lbs. (68N-m).

NOTE: Attach the Boom Mounting Brackets so that the bottom surface of the brackets are 20" (508mm) to 30" (762mm) above the ground. If necessary use the (2) Boom Angles to obtain the proper height.

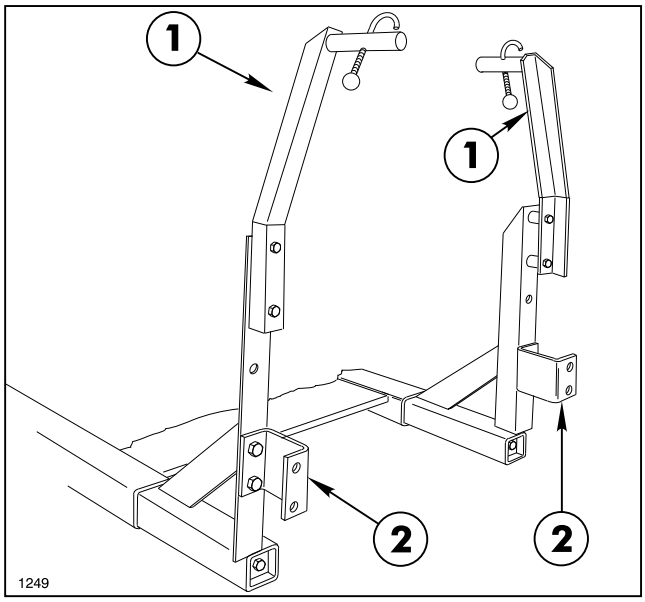

FIG. 11

1. Boom Hold-In Ass'y.
2. Boom Mounting Bracket

5. Attach the (2) "U"-shaped Boom Mounting Brackets to the proper holes in the Boom Mount uprights or Boom Angles with (4) 1/2" x 1-1/4" cap screws, and lock nuts. (See FIG. 10 & 11.)

4. Install the (2) Boom Hold-In Assemblies to the top of the Boom Mount uprights or Boom Angles using (4) 1/2" x 1-1/4" cap screws, flat washers, spacer tubes and lock nuts. See FIG. 10 & 11.

6. Position a Spacer Tube between the lugs on each side of the Main Frame tube and between Main Frame and Boom Mounting Brackets. Insert a 1/2" x 3-1/2" cap screw through the lugs and spacers. Secure the Main Frame to the Boom Mounting Brackets with lock nuts. See FIG. 12.

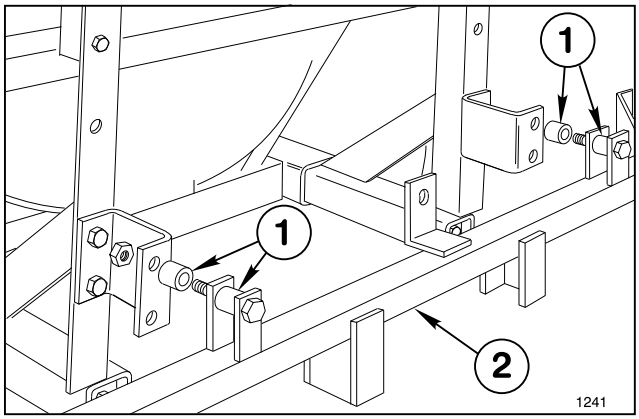

FIG. 12

1. Spacer Tube
2. Main Frame

7. Position the (2) Center Boom angles on the Main Frame and secure them to the Main Frame tube with (2) square U-bolts, (4) flat washers and hex nuts. See FIG. 13.

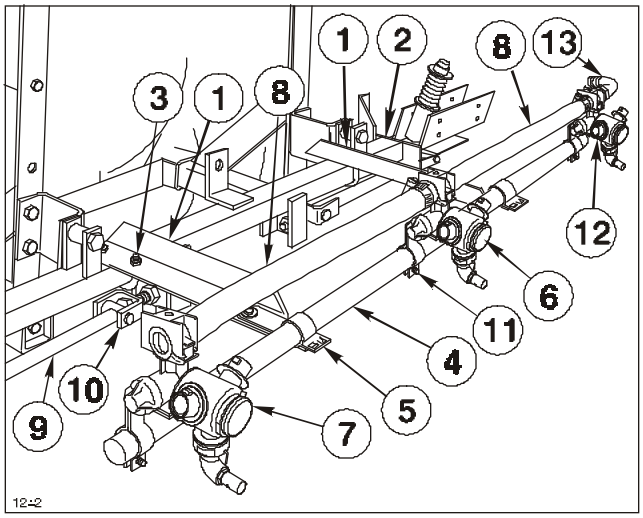

FIG. 13

1. Center Boom Angle
2. Main Frame
3. U-bolt
4. Center Boom Pipe
5. Boom Clamp
6. Double Barb Turret
7. Single Barb Turret
8. Jumper Hose
9. Strut Assembly
10. Adjustable Clevis
11. Turret Body Clamp
12. Threaded Barb Turret
13. 90° Hose Barb

8. Center and attach the Center Boom Pipe to the two Center Boom Angles with (2) clamps, (2) 3/8" x 1" cap screws, flat washers and lock nuts. Once mounted the Center Boom Pipe should be approx. 20" (508mm) to 30" (762mm) from ground.

9. Loosely attach the Double Barb Turret Body with the Turret Body Clamp in the approximate center of the Center Boom Pipe. For the most uniform spray coverage, position all Nozzles level as shown in FIG. 13.

10. Loosely attach a Single Barb Turret Body with the Turret Body Clamp to L.H. end of the Center Boom Pipe. Loosely attach a threaded Turret Body with the Turret Body Clamp to R.H. end of the Center Boom Pipe.

11. Place two Hose Clamps on two 3/4" x 19" Jumper Hoses and connect the two "end" Turret Bodies to the Double Barb Turret Body. Space nozzles 20" (508mm) apart and tighten fasteners securely. Apply thread sealer and install the 90° 3/4" Hose Barb on the Threaded Turret Body. See FIG. 13.

12. Attach the two Strut Assemblies to the two adjustable clevis' found on each side of the Main Frame tube with (2) 1/2" x 2" clevis pins and (2) 1/8" x 1" cotter pins. See FIG. 13.

IMPORTANT! DO NOT overtighten the nuts in steps 13 and 15. The clamping action could crush the Boom Pipe.

13. Insert the plugged end of an Extension Boom Pipe into the Pivot Assembly and secure with four (4) 1/4" x 1-1/4" cap screws and lock nuts. See FIG. 14 Repeat on the opposite side to assemble the other Extension Boom.

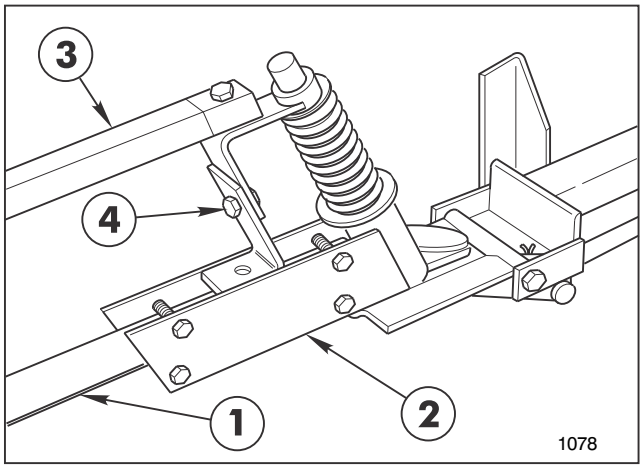

FIG. 14

1. Extension Boom Pipe
2. Pivot Assembly
3. Boom Support Assembly
4. Height Adjustment

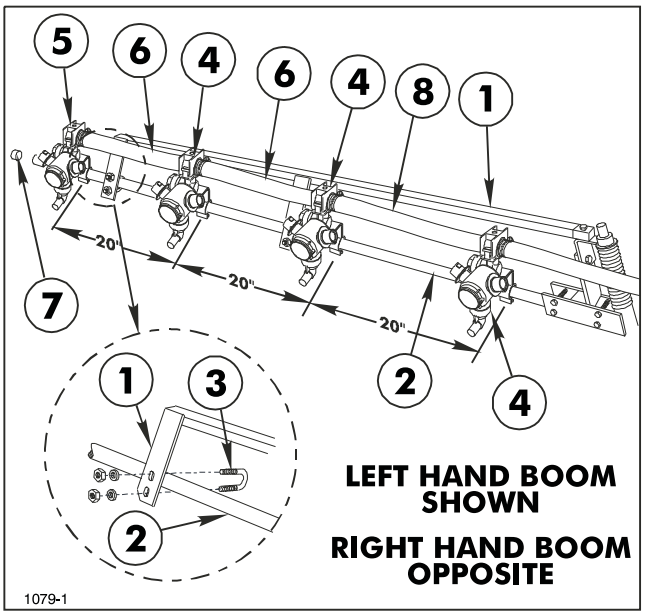

FIG 15

1. Boom Support Ass'y
2. Extension Boom Pipe
3. U-bolt
4. Double Barb Turret
5. Single Barb Turret
6. Jumper Hose 3/4" x 19"
7. Boom Cap
8. Jumper Hose 3/4" x 21"

14. Attach the L.H. Boom Support Assembly to the Pivot Assembly, using a 5/16" x 1-1/2" cap screw and lock nut. See FIG. 15 & 16.

15. Secure the two plates of the Boom Support Assembly to the Extension Boom Pipe, using two (2) 1/4" U-bolts, (4) lock nuts and flat washers. See FIG. 15.

16. Assemble the RH Boom Support Assembly to the other Extension Boom Pipe.

17. Adjust the Booms to a level position by adjusting the jam nuts on the adjustable clevis assemblies (See FIG. 13) to the desired position, then tighten the end nuts against the Main Frame plate.

18. Attach three Double Barb Turret Bodies and one Single Barb Turret Body with Clamp Assemblies on each Extension Boom Pipe as shown in FIG. 15.

19. Level Nozzles and space 20" (508mm) apart. Connect the Turret Body Assemblies with 3/4" x 19" Jumper Hoses and a 3/4" x 21" Jumper Hose. Secure with hose clamps. See FIG. 15.

20. Apply thread sealer and install (2) 1" Ball Valves into opposing ports of 1" Cross using (2) 1" Close Nipples. See FIG 16.

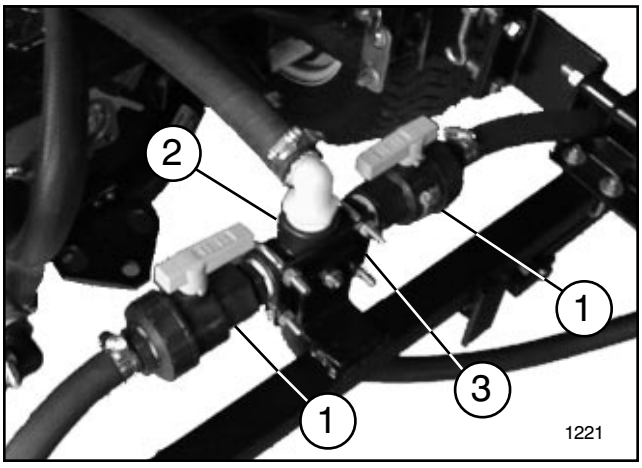

FIG. 16

1. 1" Ball Valve
2. 1" Cross
3. Cross Base

21. Apply thread sealer and install a 1" x 3/4" Hose Barb in the end of both Ball Valves.

22. Apply thread sealer and install 1" x 90° Barbed Elbow in the top port of the Cross.

23. Apply thread sealer and install a 1" x 3/4" Hose Barb in the bottom port of the Cross.

24. Mount Cross Base to Boom Frame using (1) 5/16" x 3/4" carriage bolt and flange nut. See FIG. 16.

IMPORTANT! DO NOT overtighten U-Bolts in step 25. The clamping action could crush the Cross.

25. Mount Cross Assembly to Cross Base, as shown in FIG. 16, using (2) 5/16" U-Bolts and (4) flange nuts.

26. Attach other end of the 1" x 64" Hose attached to Ratchet Valve earlier to the 90° Hose Barb in top of Cross. Secure with (1) 1" hose clamp.

NOTE: When cutting the hoses for the Extension Booms be sure to leave enough hose length to cross Booms.

27. Attach a 3/4" x 50" hose to L.H. Ball Valve and secure with hose clamp. Route hose under Spacer Tube between Boom Frame and Boom Mount toward L.H. Extension Boom. See FIG. 12 & 16. Mark Hose and cut to proper length. Attach hose to Double Barb Turret on inside of L.H. Extension Boom using hose clamp. See FIG 15. Repeat for R.H. Extension Boom.

28. Attach a 3/4" x 50" hose to Hose Barb in bottom of Cross. Route to 90° Hose Barb at R.H. end of Center Boom Pipe. (See FIG. 13) Mark Hose and cut to proper length. Attach hose to 90° Hose Barb using hose clamp.

29. Connect closed end of Turnbuckle to the Lug & Chain using (1) Lap Link. Secure by squeezing Lap Link closed. See FIG. 17.

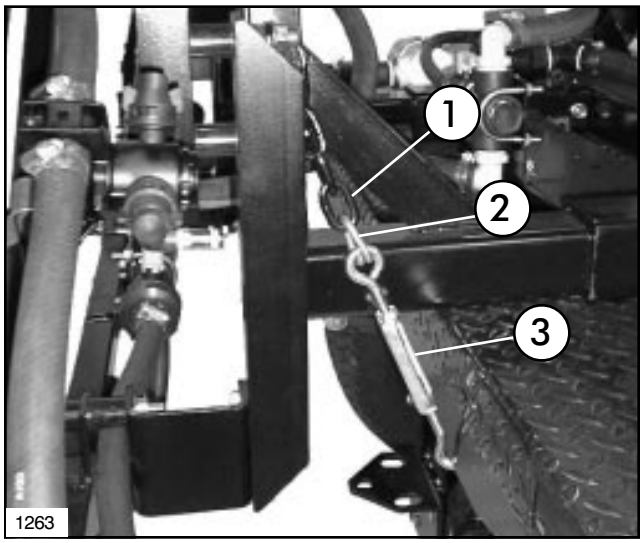

FIG. 17

1. Lug & Chain
2. Lap Link
3. Turnbuckle

30. Attach lug on Turnbuckle Assembly to Boom Mount Assembly using (1) 1/2" flange nut. Hook other end under Cargo Bed frame and tighten securely.

31. Repeat steps 29 & 30 for opposite Boom Mount Assembly

CLEAN WATER WASH TANK:

1. Mount Hold-In Brace and Manual Tube to the right front side of Saddle Assembly using (2) 5/16” x 3/4” cap screws, flat washers, hex nuts, (1) R-Clamp and (1) Ring Guide. Tighten securely. See FIG. 18.

NOTE: Left Hold-In Brace and hardware will not be used.

2. Mount Wash Tank Bracket (open end facing L.H. side) to Hold-In Brace using (2) 5/16" x 1" hex hd. cap screws, flat washers, and hex nuts. Place Clean Water Wash Tank into Wash Tank Bracket and secure with Rubber Hold-Down, as shown in FIG. 18.

NOTE: Tighten all fasteners and hose clamps securely before using the spray system.

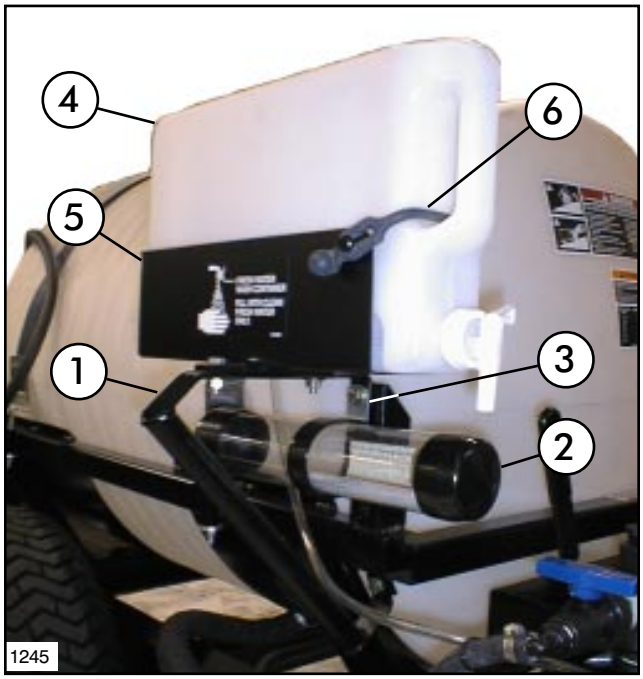

FIG. 18

1. Hold-In Brace
2. Manual Tube
3. R-Clamp
4. Clean Water Wash Tank
5. Wash Tank Bracket
6. Rubber Hold-Down

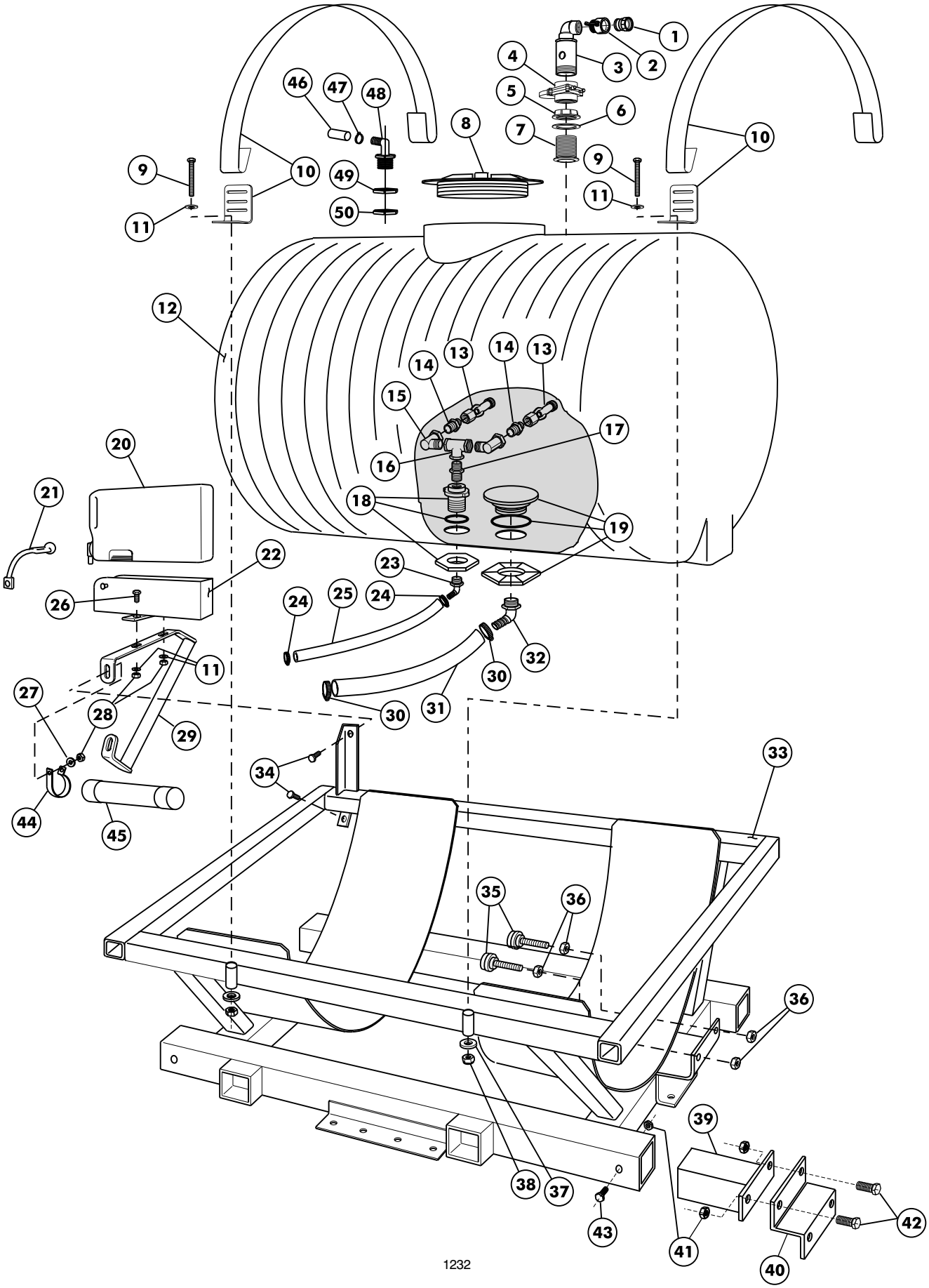
1
2
3
4
5
6
7
8
9
10
11
12
13
14
15
16
17
18
19
20
21
22
23
24
25
26
27
28
29
30
31
32
33
34
35
36
37
38
39
40
41
42
43
44
45
46
47
48
49
50

1232

TANK AND SADDLE

Ref	Part No.	Description	Qty
1	92-0238	Quick Coupler	1
2	041316	Quick Adapter	1
3	043069	Standup Assembly	1
4	043064	Knife Valve	1
5	043068	Fly Nut, 2" NPT	1
6	043067	Sealing Washer	1
7	043066	Bulk Head, 2" NPT	1
8	92-8412	Tank Cover 10" (f/w Tank Ass'y)	1
	92-8411	Fillwell Ass'y 10" (f/w Tank Ass'y)	1
9	322-19	Hex Hd Cap Screw 5/16" x 4"	4
10	92-8380	Tank Band	2
11	3256-23	Flatwasher, 5/16"	6
12	92-8377	Tank Assembly - 110 Gals.	1
13	92-8392	Jet Agitator	2
14	92-8541	Reducing Nipple 3/4" x 1/2"	2
15	042940	90° Street Elbow 3/4" NPT	2
16	042941	Tee, 3/4"	1
17	041294	Close Nipple, 3/4"	1
18	041801	Tank Fitting, 3/4" (f/w Tank Assy.)	1
19	041798	Anti-Vortex Fitting (f/w Tank Assy.)	1
20	92-3976	Clean Water Wash Tank	1
	93-0828	Spigot (f/w 92-3976 Tank)	1
21	042198	Rubber Hold-Down	1
22	92-3969	Wash Tank Bracket	1
23	92-8413	90° HB 3/4" MPT x 1/2" HB	1
24	96609	Hose Clamp	2
25	042946	Agitator Hose	1

Ref	Part No.	Description	Qty
26	322-5	Hex Hd Screw 5/16" x 1"	2
27	3256-3	Flatwasher, 5/16"	2
28	3217-6	Hex Nut, 5/16"	4
29	042983	Hold-in Brace Assembly	1
30	41327	Hose Clamp	2
31	95-9142	Suction Hose	1
32	93-0856	90° Elbow 1-1/4" MPT x 1-1/4" HB	1
33	95-9050	Saddle Assembly	1
34	322-3	Hex Hd Cap Scr 5/16" x 3/4"	2
35	92-8367	Tank Bumper	4
36	3218-5	Hex Jam Nut 1/2"	8
37	356303	Washer, 5/16"	4
38	32153-3	Lock Nut, 5/16"	4
39	95-9076	Connector Tube - Welded	4
40	95-9075	Mounting Bracket	4
41	32128-49	Flange Locknut	12
42	325-6	Hex HD Cap Scr 1/2"-13 x 1 1/2"	8
43	325-14	Hex HD Cap Scr 1/2"-13 x 3 1/2"	4
44	42560	R-Clamp	1
45	42559	Tube	1
46	95-9249	Hose - 1/4" x 54"	1
47	097406	Clamp - Hose 1/4"	2
48	94-7254	Hose Barb 90° - 1/4"HB x Bulkhead	1
49	94-7256	Hose Washer	1
50	94-7255	Fitting Nut	1

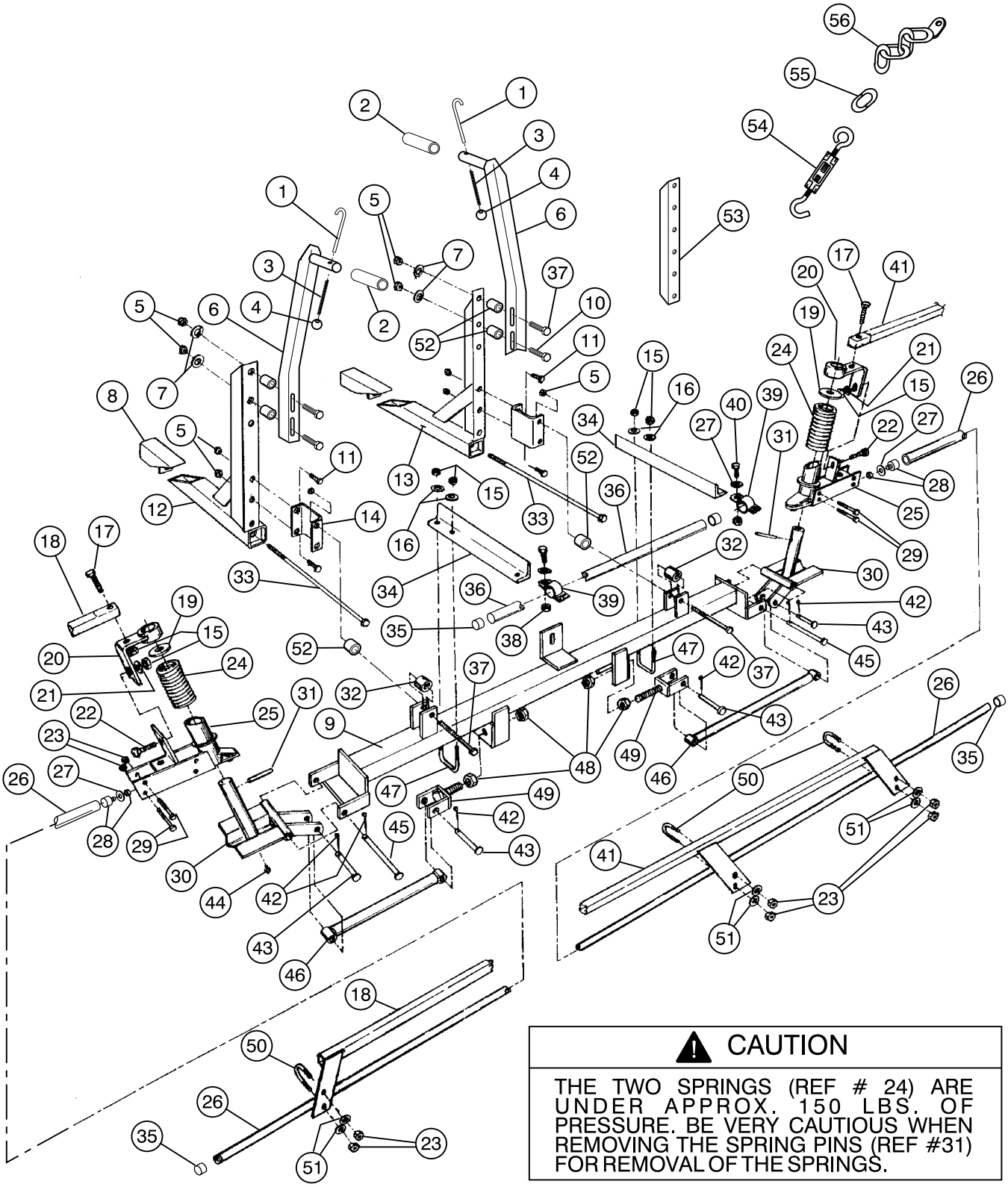

⚠ CAUTION

THE TWO SPRINGS (REF # 24) ARE UNDER APPROX. 150 LBS. OF PRESSURE. BE VERY CAUTIOUS WHEN REMOVING THE SPRING PINS (REF #31) FOR REMOVAL OF THE SPRINGS.

IMPORTANT! THE TWO BOLTS (REF #33) MUST BE TORQUED TO 50 FT. LBS. (68N-m).

SPRAY BOOMS

Ref	Part No.	Description	Qty
1	92-8562	Hold-in Hook	2
2	92-8561	Hold-in Hose	2
3	92-8563	Hold-in Spring	2
4	92-8564	Hold-in Knob	2
5	32153-5	Hex Nut, 1/2"	6
6	92-8534	Boom Hold-in Assembly	2
7	3256-6	Flat Washer 1/2"	4
8	42223	Tube Wedge Assembly	2
9	42227	Main Frame Tube	1
10	325-10	HHCS, 1/2” x 2-1/2”	2
11	325-6	HHCS, 1/2” x 1-1/2”	4
12	42217	Boom Mount Ass'y L.H.	1
13	42222	Boom Mount Ass'y R.H.	1
14	92-8533	Boom Mounting Brkt.	2
15	3217-6	Hex Nut, 5/16”	14
16	3256-3	Flat Washer, 5/16”	6
17	322-7	HHCS, 5/16” x 1-1/2”	2
18	42711	Boom Support Ass'y L.H.	1
19†	3256-62	Flat Washer 1"	2
20	42707	Support Bracket Ass'y	2
21	3256-23	Flat Washer, 5/16"	6
22	3230-1	Carriage Bolt 5/16” x 3/4”	2
23	32146-17	Lock Nut 1/4”	10
24†	42196	Compression Spring	2
25†	42706	Breakaway Pivot Ass'y	2
26	42282	Extension Boom Pipe Ass'y	2
27	3256-4	Flat Washer 3/8”	4

Ref	Part No.	Description	Qty
28	92-3749	Freeze Plug	2
29	321-10	HHCS 1/4” x 1-3/4”	8
30†	42243	Hinge Ass'y	2
31†	32121-78	Spring Pin 1/4” x 2”	2
32	42257	Spacer Tube 1"	4
33	42199	HHCS 1/2” x 18”	2
34	42234	Center Boom Angle	2
35	92-8420	Boom Cap	4
36	40493	Center Boom Pipe	1
37	325-14	HHCS 1/2” x 3-1/2”	4
38	32153-2	Lock Nut 3/8”	2
39	40494	Clamp Ass'y	2
40	323-6	HHCS 3/8” x 1”	2
41	42710	Boom Support Ass'y R.H.	1
42	3272-11	Cotter Pin 1/8” x 1”	6
43	42195	Clevis 1/2” x 4-1/2”	2
44†	361011	Grease Fitting	2
45	42194	Clevis 1/2” x 4-1/2”	2
46	42240	Strut Ass'y	2
47	301950	U-Bolt 5/16”	2
48	3217-11	Hex Nut 5/8”	4
49	42237	Adjustable Clevis Ass'y	2
50	92-0010	U-Bolt	4
51	3256-2	Flat Washer 1/4”	8
52	42258	Spacer Tube 1-1/4”	4
53	95-9090	Boom Angle	2

† - Denotes parts available in an assembled unit. Order #42840 Breakaway Assembly

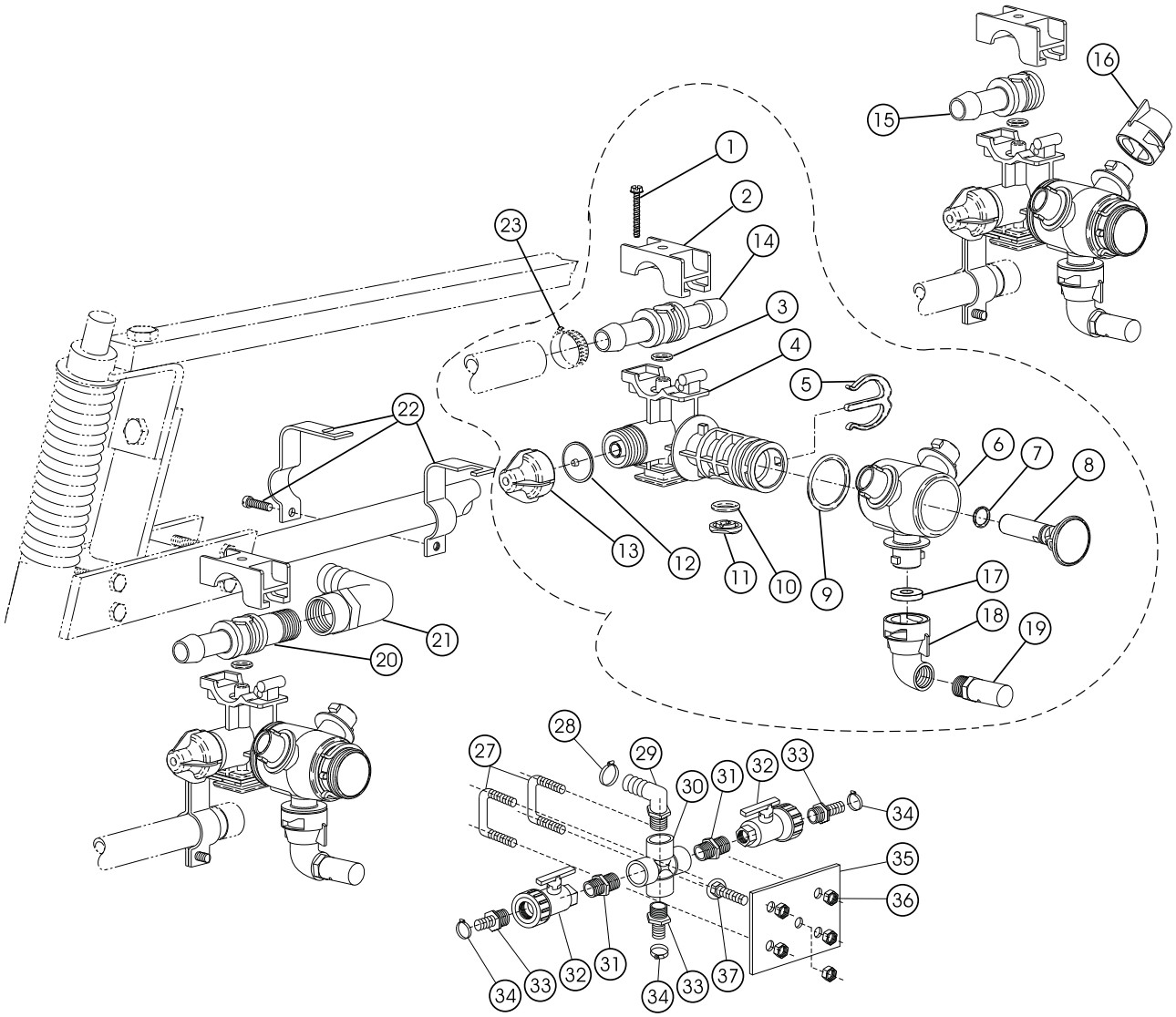
1
2
3
4
5
6
7
8
9
10
11
12
13
14
15
16
17
18
19
20
21
22
23
27
28
29
30
31
32
33
34
35
36
37

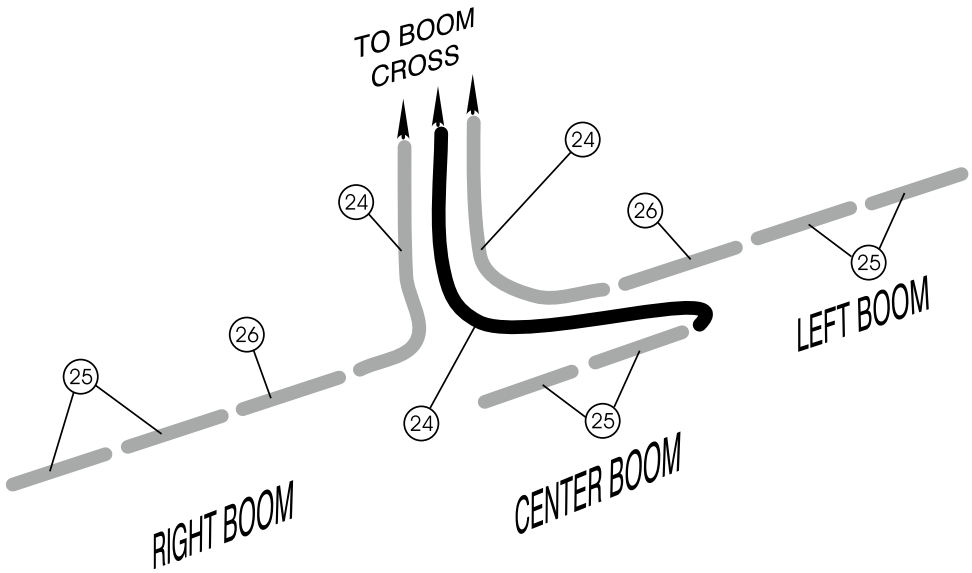
TO BOOM CROSS
24
24
26
25
LEFT BOOM
26
25
24
25
RIGHT BOOM
CENTER BOOM

1103-3

TURRET BODIES & BOOM HOSES

Ref	Part No.	Description	Qty
*	95-9183	Turret Body - Double Barb (Incl. Ref. #'s 1-14)	7
*	95-9181	Turret Body - Single Barb (Incl. Ref. #'s 1-13 & 15)	3
*	95-9184	Turret Body - Barb x 1/2 NPT (Incl. Ref. #'s 1-13 & 20)	1
1#	95-9189	Screw	1
2#	95-9190	Upper Clamp	1
†3#	95-9191	O-Ring	1
4#	95-9192	Split-Eyelet Body	1
5#	95-9197	E-Clip	1
6#	95-9196	Turret	1
†7#	95-9198	O-Ring	1
8#	95-9200	Plug	1
†9#	95-9199	O-Ring	1
†10#	95-9194	O-Ring	1
†11#	95-9195	Seal	1
†12#	41003	Diaphragm	1
13#	95-9193	End Cap Assembly	1
14	95-9202	Double Hose Barb	7
15	95-9201	Single Hose Barb	3
16	95-9187	Nozzle Dust Cap (Incl. Ref. # 17)	22
17	40998	Seat Gasket	33

Ref	Part No.	Description	Qty
18	95-9186	Nozzle Cap, 90° (Incl. Ref. # 17)	11
19	95-9188	TTJ10 Turbo TurfJet (Std.)	11
	95-9221	TTJ2 Turbo TurfJet (Optional)	11
	95-9222	TTJ4 Turbo TurfJet (Optional)	11
	95-9223	TTJ5 Turbo TurfJet (Optional)	11
	95-9224	TTJ6 Turbo TurfJet (Optional)	11
	95-9225	TTJ8 Turbo TurfJet (Optional)	11
	95-9226	TTJ15 Turbo TurfJet (Optional)	11
20	95-9203	Hose Barb x 1/2" NPT	1
21	95-9314	90° Elbow, 1/2" FPT x 3/4" H.B.	1
22	95-9185	Turret Body Clamp	11
23	92-0045	Hose Clamp, 3/4" Hose	22
24	41340	Boom Hose, 3/4" x 50"	3
25	40506	Jumper Hose, 3/4" x 19"	6
26	95-2229	Jumper Hose, 3/4" x 21"	2
27	92-3723	U-Bolt 5/16" (RD)	2
28	021146	Hose Clamp - 1"	1
29	041140	Elbow 90 - 1" x 1" HB	1
30	92-8416	Cross - 1"	1
31	041304	Close Nipple - 1"	2
32	040020	Ball Valve - 1"	2
33	92-0236	Hose Barb - 1" x 3/4" HB	3
34	92-0045	Hose Clamp - 3/4"	3
35	95-9216	Cross Base	1
36	32128-20	Whizlock Nut - 5/16"	5
37	3230-1	Carriage Bolt 5/16" x 3/4"	1

† Denotes parts in Seal Kit # 95-9316

These parts make up one body assembly

* Not illustrated

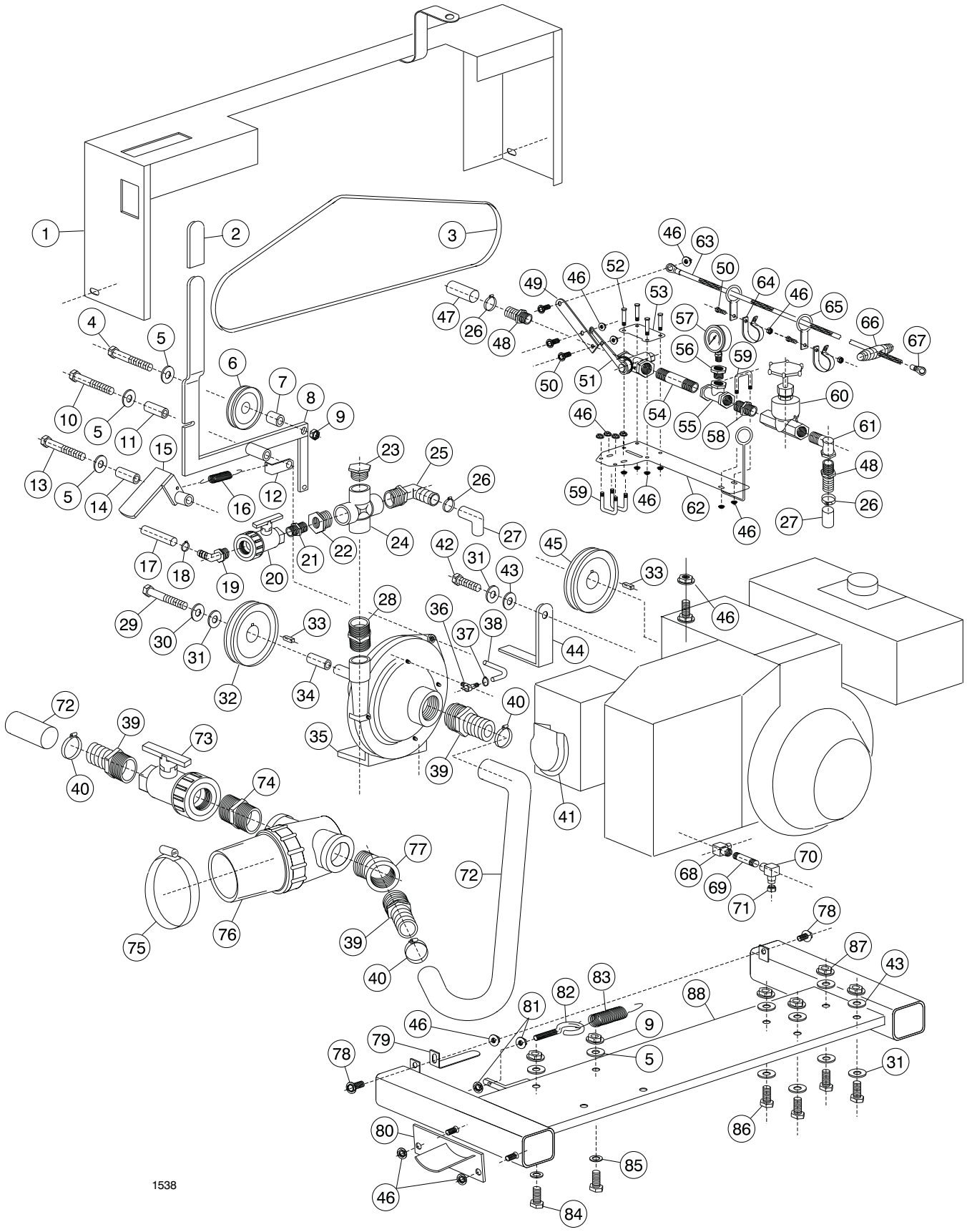

Model 41441 Centrifugal Pump

Model 41441 Centrifugal Pump

Ref.	Part No.	Description	Qty.
1	95-9115	Belt Cover Ass'y	1
2	041145	Lever Grip	1
3	041348	Belt	1
4	323-10	HHCS 3/8" x 2"	1
5	3256-4	Washer 3/8"	5
6	041353	Idler Pulley	1
7	92-3746	Spacer - Backside Idler	1
8	95-9062	Pulley Pivot Handle	1
9	32153-2	Locknut 3/8"	3
10	323-15	HHCS 3/8" x 3 1/2"	1
11	95-9071	Bushing - Pivot	1
12	95-9073-23	Spring Angle (Painted)	1
13	323-11	HHCS 3/8" x 2 1/4"	1
14	95-9072	Bushing - Latch	1
15	95-9067	Latch Ass'y	1
16	92-0417	Spring	1
17	42946	Agitator Hose 1/2"	1
18	096609	Clamp - Hose 1/2"	2
19	042046	Elbow 90° - 1/2" x 1/2" HB	1
20	040192	Ball Valve 1/2"	1
21	041314	Close Nipple 1/2"	1
22	041306	Reducing Bushing 1" x 1/2"	1
23	041315	Plug - 1"	1
24	92-8416	Cross - 1"	1
25	041140	Elbow 90° - 1" x 1" HB	1
26	021146	Clamp Hose - 1"	3
27	95-9247	Hose - 1" x 44"	1
28	041304	Close Nipple - 1"	1
29	3210-3	HHCS 5/16" NF x 3/4"	1
30	3253-4	Lockwasher 5/16"	2
31	356303	Special Washer	5
32	92-2629	Pulley - Pump (Painted)	1
33	92-0049	Sq. Key 3/16" x 1 1/4"	2
34	94-8502	Spacer - Pully	1
35	93-6505	Pump - Centrifugal	1
36	95-9396	Valve - 1/8" Shutoff	1
37	097406	Clamp - Hose 1/4"	2
38	95-9249	Hose - 1/4" x 54"	1
39	93-0851	Hose Barb 1 1/4" x 1 1/4" HB	3
40	041327	Clamp - Hose 1 1/4"	3
41	95-9094	Muffler Deflector w/Screws	1
42	322-3	HHCS 5/16" x 3/4"	1
43	3256-3	Washer 5/16"	5
44	95-9114	Guide - Belt	1

Ref.	Part No.	Description	Qty.
45	95-9097	Pulley - Engine	1
46	32128-20	Whizlock Nut 5/16"	19
47	95-9246	Hose - 1" x 64"	1
48	041730	Hose Barb 3/4" MPT x 1" HB	2
49	95-9232	Lever - Handle	1
50	3234-5	HHCS Whizlok 5/16" x 3/4"	5
51	95-9230	Valve - Ratchet 3/4"	1
52	322-12	HHCS 5/16" x 2 1/2"	4
53	95-9220	Plate - Valve (Top)	1
54	95-9248	Nipple - 3/4" x 4"	1
55	042941	Tee - 3/4"	1
56	041310	Red Bushing 3/4" x 1/4"	1
57	040485	Gauge - Pressure	1
58	041294	Close Nipple - 3/4"	1
59	301950	U-Bolt (Sq)	3
60	95-9235	Valve - Globe	1
61	042940	Elbow St 90° - 3/4" (use w/skid)	1
62	95-9277	Valve Plate Ass'y	1
63	95-9325	Pull Rope - 25'	1
64	95-9326	R-Clamp	2
65	95-9286	Ring Guide	2
66	95-9327	Handle - Pull Rope	1
67	094012	Terminal	1
68	094851	St Elbow 3/8" NPT - Hyd	1
69	289-45	Nipple - Black 3/8" x 3"	1
70	095023	Elbow 3/8" NPT - Hyd	1
71	281-2	Pipe Plug 3/8" - 18 NPT	1
72	95-9142	Suction Hose	2
73	93-0855	Ball Valve - 1 1/4"	1
74	92-0050	Close Nipple 1 1/4"	1
75	92-0054	Clamp - Hose 3"	1
76	042701	Suction Strainer - 20 Mesh	1
77	93-0897	Elbow - St 45° - 1 1/4" (use w/skid)	1
78	3234-17	HHCS 5/16" x 1" Whizlok	2
79	95-9245	Guide - Belt	1
80	92-0233	Strainer Brkt Ass'y	1
81	3218-2	Jam Nut 5/16" UNC	2
82	95-9103	Eye Bolt	1
83	041721	Spring - Pump	1
84	323-7	HHCS 3/8" x 1 1/4"	2
85	356308	Washer	2
86	322-9	HHCS 5/16" x 1 3/4"	4
87	32153-3	Locknut 5/16"	4
88	95-9058	Eng/Pump Base Welded	1

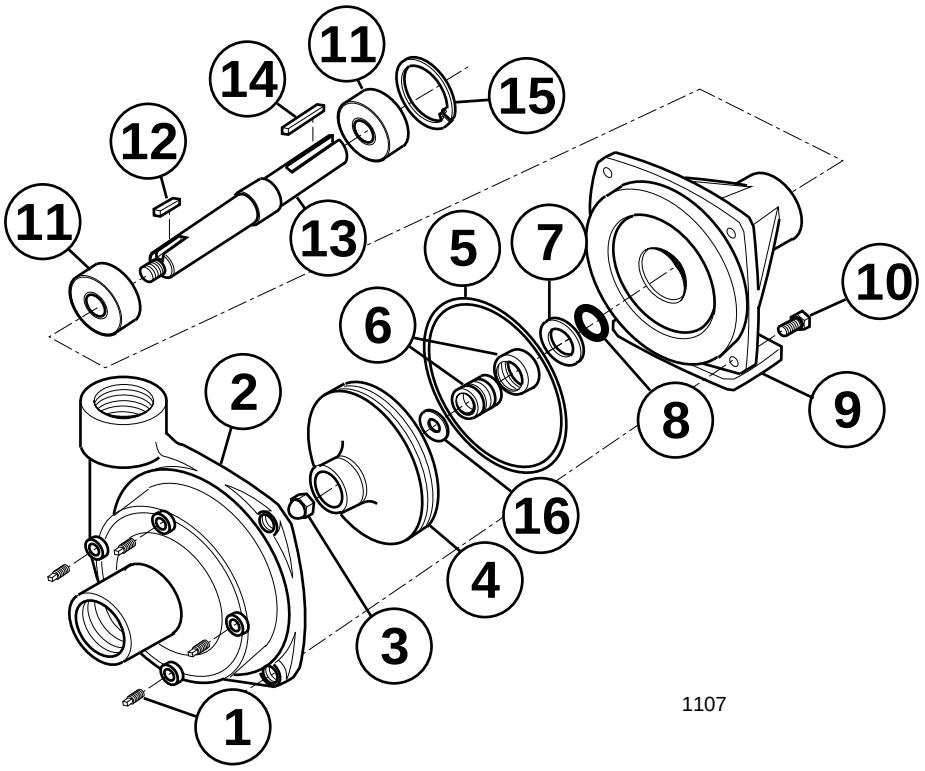

CENTRIFUGAL PUMP (93-6505)

Ref	Part No.	Description	Qty
1	42084	Drain Plug	4
2	94-8503	Pump Casing	1
3	42086	Impeller Nut	1
4	94-8504	Impeller	1
5*	42089	O-Ring	1
6†*	42088	Mechanical Seal (Viton)	1
7	93-0924	Seal Retainer	1
8	42092	Slinger Ring	1

Ref	Part No.	Description	Qty
9	93-0925	Mounting Flange	1
10	323-6	Bolt	4
11	93-0927	Ball Bearing	2
12	93-0928	Key	1
13	94-8505	Pump Shaft	1
14	93-0930	Key	1
15	42093	Bearing Retainer	1
16*	93-0931	Gasket	1

*Denotes parts included in Seal/O-Ring Repair Kit. Order Part No. 94-8520

† optional heavy duty seal kit 99-0581 (include seal 99-0582 and O-Ring 42089)

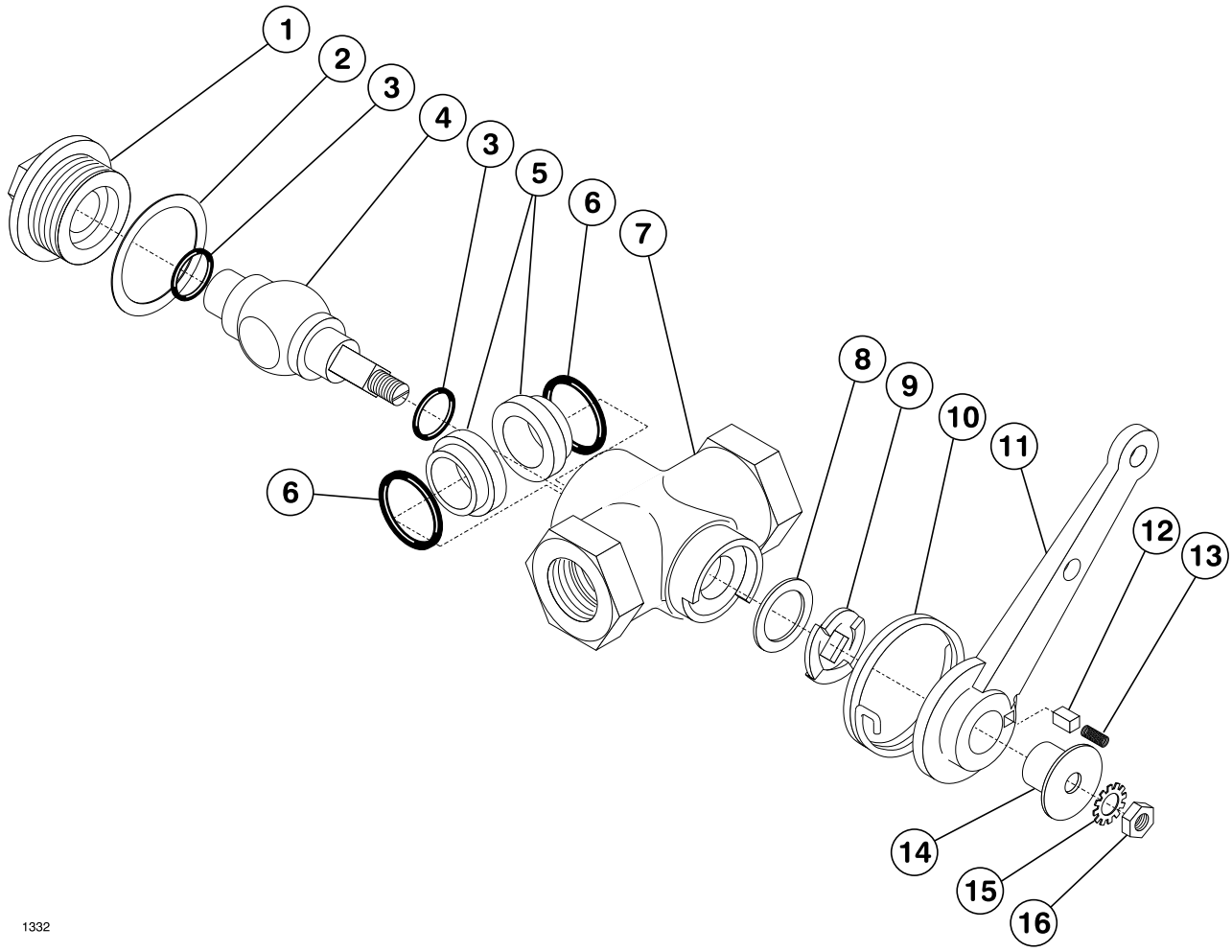

RATCHET VALVE (95-9230)

Ref	Part No.	Description	Qty
1	99-0500	Cap	1
2	99-0506	Gasket	1
3	99-0504	O-Ring (Viton)	2
4	99-0499	Ball Stem	1
5	99-0503	Seal	2
6	99-0505	O-Ring (Viton)	2
7	99-0498	Body	1
8	99-0508	Washer	1

Ref	Part No.	Description	Qty
9	99-0509	Ratchet Wheel	1
10	99-0507	Torsion Spring	1
11	99-0501	Lever	1
12	99-0512	Pawl	1
13	99-0513	Pawl Spring	1
14	99-0518	Lever Bearing	1
15	99-0511	Shakeproof Washer	1
16	99-0502	Lock Nut	1

NOTES:

NOTES:



Helping you put quality into play.™