FORM NO. 95-9101

TORO

MODEL NO. 41020-80101 & UP
MODEL NO. 41021-80101 & UP
MODEL NO. 41415-80101 & UP
MODEL NO. 41443-80101 & UP
MODEL NO. 41440-80101 & UP

SET-UP AND PARTS CATALOG

SKID SPRAYER
with the 41443 Diaphragm Pump

SAFETY AND INSTRUCTION DECALS

The following safety and instruction decals are installed on the Standard Spray System. If any become damaged or illegible, replace them. Decals and part numbers are listed below and in the parts catalog. Order replacements from your Authorized Toro Distributor.



Part No. 65-3090: Located on Engine Cover Above Pull Rope

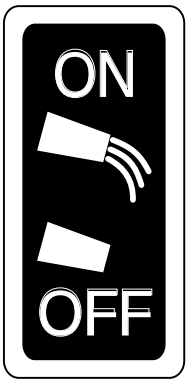

Part No. 041174: Located on Belt Cover



Part No. 80-9350: Located on Belt Cover

.

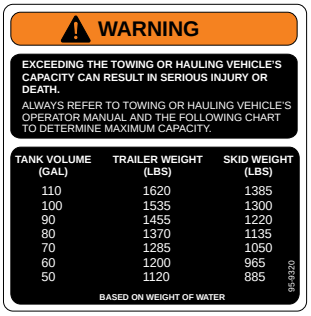

Part No. 95-9320: Located on Front of Tank



Part No. 92-3518: Located on Front of Tank

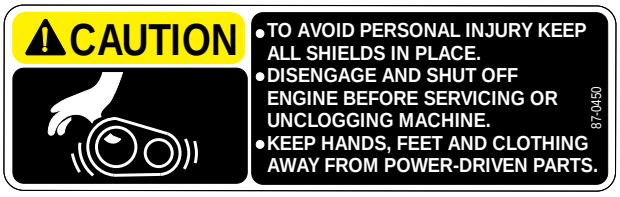

Part No. 87-0450: Located on Belt Cover



Part No. 93-0800: Located on Side of Clean Water Wash Tank

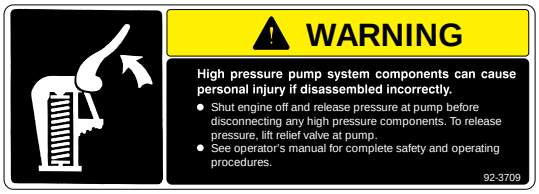

Part No. 92-3709: Located on Air Cleaner of Engine

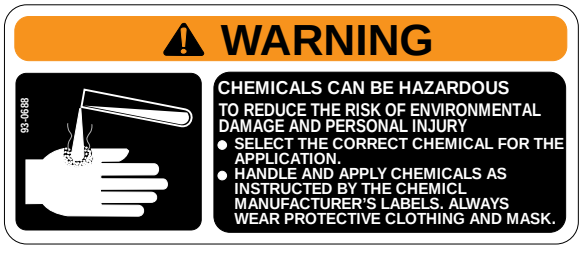

Part No. 93-0688: Located on Lid of Sprayer Tank

©The TORO Company - 1999
All Rights Reserved

NOTES:

Refer to the illustrated Parts List for the details of parts used in assembling the SKID SPRAYER.

Note: "Right" and "Left" as used in the following instructions, refer to the operator's right and left when seated in the normal operating position.

Trailer Mode Set-Up Instructions

SADDLE AND TRAILER:

1. Cut the shipping straps and remove the Spray Tank and Saddle Assembly from the shipping skid.

NOTE: In the following instructions, "thread sealer" refers to Teflon thread tape.

NOTE: The end of the Tank with Safety Decals is the front of Tank and Saddle Assembly when being used in trailer mode.

2. Secure the 1/2" x 42" Agitator Hose to the 90° Barbed Elbow in bottom of Tank using (1) Hose Clamp. Assure that the Barbed Elbow is pointing to the R.H. side of Tank.

3. Apply thread sealer and install the 1-1/4" x 90° Barbed Elbow into the bottom of the Tank so that it is pointing to the R.H. side of tank.

4. Secure the 1-1/4" x 36" Suction Hose to the 90° Barbed Elbow in bottom of Tank using (1) Hose Clamp.

5. Mount the Rear Axle and Tire Assembly to the Saddle Assembly as shown in FIG. 1, using (2) 3/8" x 1-1/4" hex hd. cap screws, lock washers, hex nuts and (4) flat washers on each side of the Saddle Assembly. Torque to 30 ft. lbs (41N-m). Additional holes in Saddle Assembly are for weight transfer adjustment.

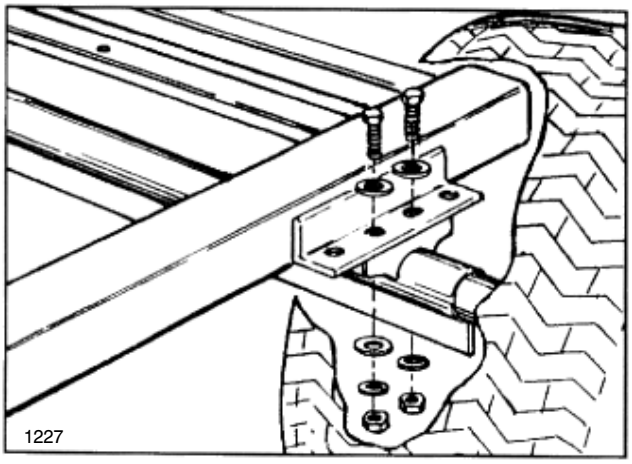

FIG. 1

6. Slide Tongue Adapter through Engine / Pump Base and into Saddle Assembly on end with Safety Decals on Tank. Secure with (4) 1/2" x 3-1/2" hex. hd. cap screws and flange locknuts. See FIG. 2.

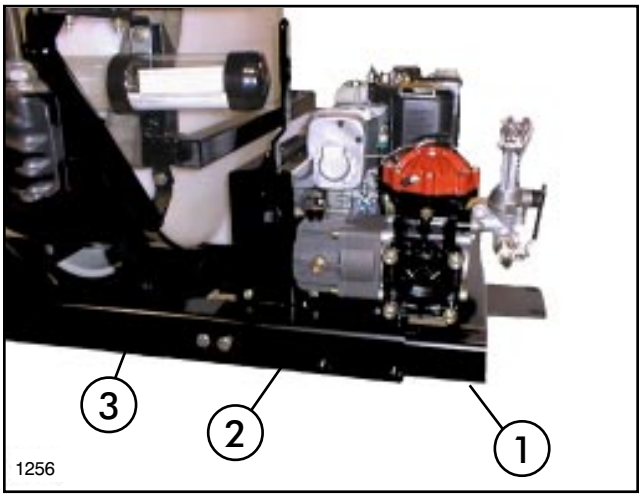

FIG. 2

1. Tongue Adapter
2. Engine / Pump Base
3. Saddle Assembly

7. Mount the Tongue Assembly to the underside of the Tongue Adapter and Skid Frame as shown in FIG. 3, using (6) 1/2" x 1-1/4" hex hd. cap screws, (2) 1/2" x 1-1/2" hex hd. cap screws, (8) flange locknuts. Torque to 75 ft. lbs (102N-m).

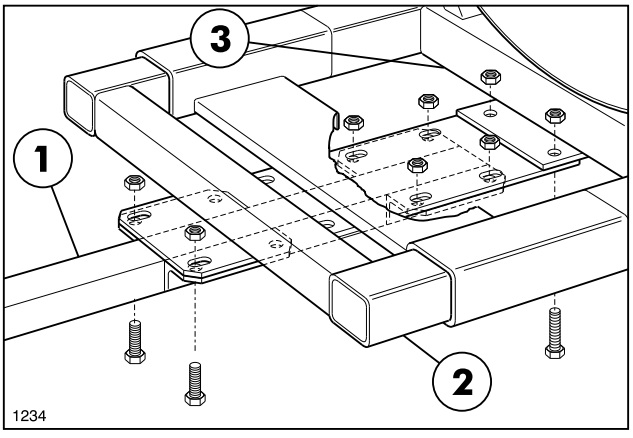

FIG. 3

1. Tongue Assembly
2. Tongue Adapter
3. Saddle Assembly

8. Remove the (2) U-Bolts securing Harness Tube to the Tongue. Discard U-Bolts and Harness Tube they will not be used. See FIG. 4.

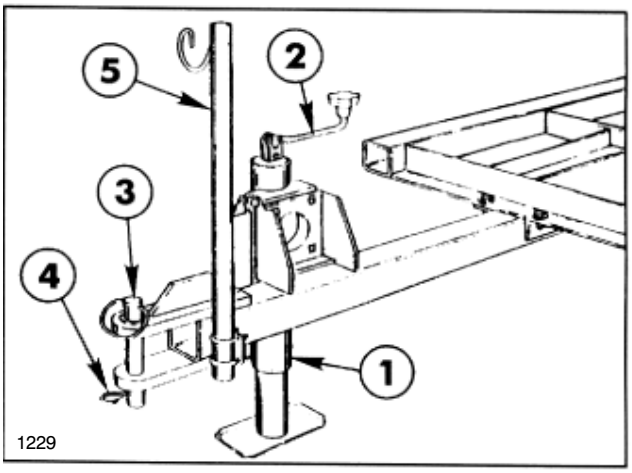

FIG. 4

1. Jack
2. Crank Handle
3. Hitch Pin
4. Cotter Pin
5. Harness Tube

DIAPHRAGM PUMP:

1. Secure the Strainer Bracket to the front R.H. side of Engine / Pump Base using studs on Engine / Pump Base and (2) 5/16" flange nuts. See FIG. 5.

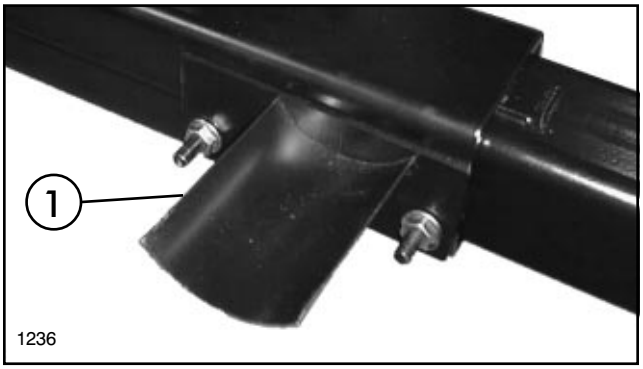

FIG. 5

1. Strainer Bracket

NOTE: The arrow on the top of Suction Strainer indicates direction of flow. The arrow should point away from 1-1/4" Ball Valve.

2. Apply thread sealer and attach the 1-1/4" Ball Valve into the inlet port of the Suction Strainer using (1) 1-1/4" close nipple. See FIG. 6.

3. Apply thread sealer and install (1) 1-1/4" Hose Barb into the 1-1/4" Ball Valve.

4. Apply thread sealer and install (1) 90° Hose Barb into the outlet port of the Suction Strainer.

5. Secure Suction Strainer to Strainer Bracket using (1) hose clamp.

6. Attach the other end of the 1-1/4" x 36" Suction Hose, earlier attached to bottom of Tank, to the hose barb in the Ball Valve. Secure with hose clamp.

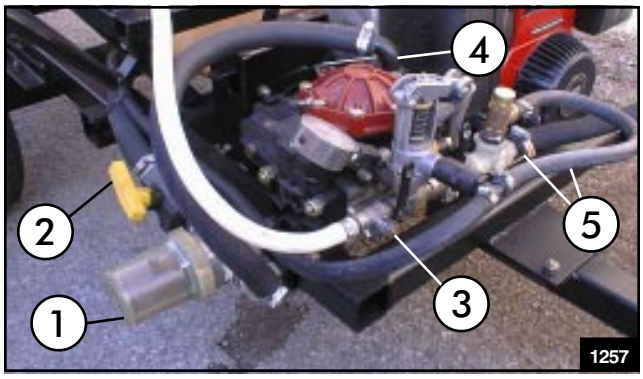

FIG. 6

1. Suction Strainer
2. 1-1/4" Ball Valve
3. 1/2" Ball Valve
4. 1" x 90° Hose Barb
5. For optional Boom Spray only.

7. Connect Suction Strainer to the 1" x 90° Hose Barb in top of Pump with 1 x 24" suction hose. Secure with (2) hose clamps.

8. Attach (1) Hose Hook to the R.H. and L.H. rear corners of Saddle Assembly. See FIG. 7.

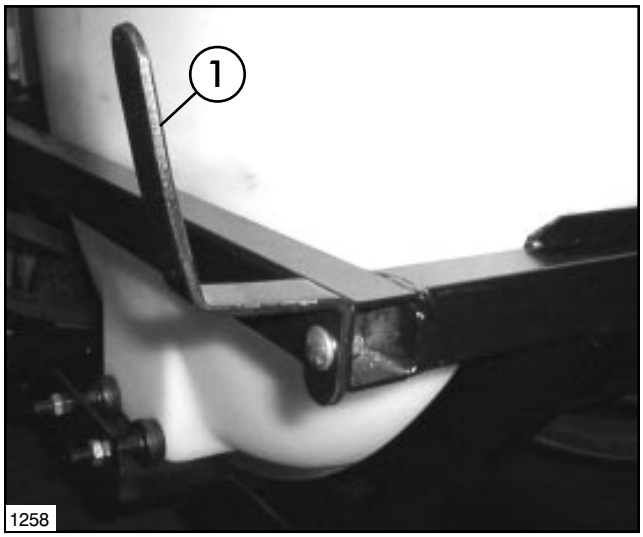

FIG. 7

1. Hose Hook

9. Apply thread sealer and attach the 25' Spray Gun Hose to Spray Gun using fitting already installed in Spray Gun Hose.

10. Attach other end of Spray Gun Hose to 1/2" Ball Valve in Pump. See FIG. 6. Wrap Spray Gun Hose around Hose Hooks when not in use.

NOTE: If installing the optional 41020 Center Boom. Skip Steps 11 and 12 and proceed to the Relief Valve and Ratchet Valve Section. If not installing the optional 41020 Center Boom steps 11 and 12 completes your set-up.

11. Install (1) 1/2" x 90° Hose Barb into the front port Pressure Relief/Adjustment Valve using (1) 1/2" Close Nipple and Coupling. See FIG. 6.

12. Attach the other end of the 1/2 x 42" Agitator Hose earlier attached to bottom of Tank to the 1/2" x 90° Hose Barb in the front port of the Pressure Relief/Adjustment Valve. Secure with hose clamp.

RELIEF VALVE AND RATCHET VALVE:

1. Install (1) 1/2" Barbed Tee into the front port of the Pressure Relief/Adjustment Valve using (1) 1/2" Nipple and Coupling. See FIG. 8.

2. Attach the other end of the 1/2" x 42" Agitator Hose earlier attached to bottom of Tank to 1/2" Barbed Tee in the front port of the Pressure Relief/ Adjustment Valve. Secure with 1/2" hose clamp.

3. Remove the plug from the L.H. port of the Pressure Relief/Adjustment Valve.

4. Loosen the (2) hex nuts securing the Pressure Relief/Adjustment Valve to the Diaphragm Pump. Apply thread sealer and install the 1/2" Ball Valve into the L.H. port of the Pressure Relief/Adjustment Valve and retighten hex nuts. See FIG. 8.

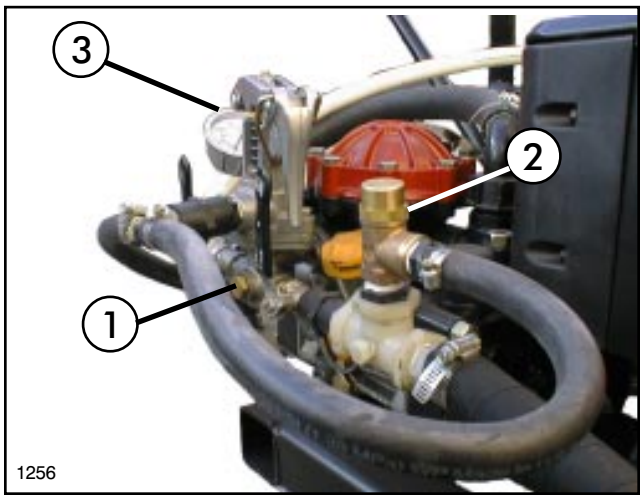

FIG. 8

1. 1/2" Ball Valve
2. Relief Valve
3. Pressure Relief/ Adjustment Valve

5. Apply thread sealer and attach the 3/4" tee to the 1/2" ball valve using (1) 1/2" coupling and (1) 1/2" x 3/4" reducing nipple.

6. Apply thread sealer and install the Relief Valve in the top port in tee using (1) 3/4" x 1/2" reducing bushing as shown in FIG. 8.

7. Apply thread sealer and install (1) 1/2" hose barb in open port in Relief Valve. Connect Relief Valve and barbed tee using (1) 1/2" x 21" hose and (2) hose clamps.

8. Apply thread sealer and install a 3/4" x 1" hose barb in the L.H. port of the tee.

9. Secure Valve Plate to the front bar of the Saddle Assembly using (2) U-Bolts and (4) 5/16" flange nuts. See FIG. 9.

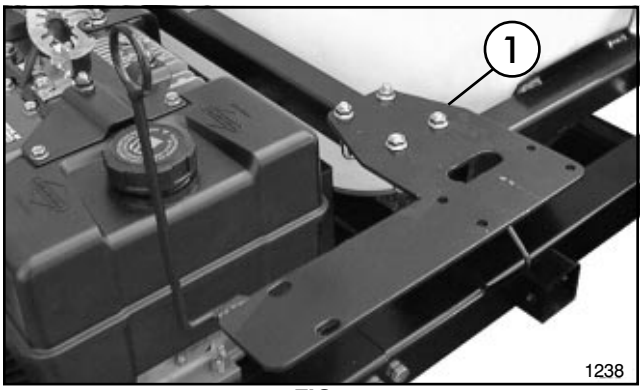

FIG. 9

1. Valve Plate

10. Apply thread sealer and install a 3/4" x 1" hose barb into both ports in the Ratchet Valve. See FIG. 10.

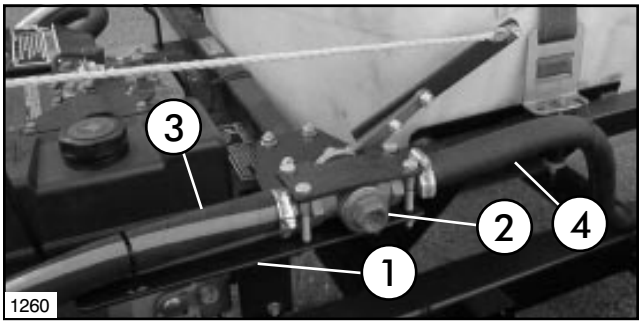

FIG. 10

1. Valve Bracket
2. Ratchet Valve
3. 1 x 36" Hose
4. 1 x 64" Hose

NOTE: The lever on Ratchet Valve should rest pointing toward rear of trailer.

IMPORTANT! DO NOT overtighten the nuts in step 11.

11. Attach Valve Plate Top to Valve Plate over Ratchet Valve as, shown in FIG. 10, using (4) 5/16" x 2-1/2" cap screws and flange nuts.

12. Connect Ratchet Valve to tee at pump with (1) 1" x 36" Hose and (2) hose clamps. See FIG. 8 & 10

13. Secure the 1" x 64" Hose to hose barb in the rear of the Ratchet Valve using (1) hose clamp. Route along Saddle frame toward rear of vehicle. Secure hose to Valve Plate using (1) tie cable.

14. Attach handle to Ratchet Valve using (2) 5/16" x 3/4" cap screws and flange nuts.

15. Attach the Pull Rope to Ratchet Valve handle using 5/16" x 3/4" cap screw and flange nut.

NOTE: If it is necessary to cut pull rope be sure to allow enough rope to allow for R.H. turns.

16. Route Pull Rope along L.H. side of operator for ease of actuating Ratchet Valve. Provided are (2) Ring Guides, (2) R-Clamps, (1) Ring Terminal, (1) Pull Rope Handle, (2) 5/16" x 3/4" cap screws and flange nuts. Use as needed to route Pull Rope.

BOOM FRAME ASSEMBLY:

1. Drive the Stop Pin into Boom Mount until flush with surface of tube.

2. Apply a heavy coating of grease to the tubes of the two Boom Mount Assemblies and insert them into the Saddle Assembly until support angle bottoms out against Vehicle Frame. (See FIG. 11.)

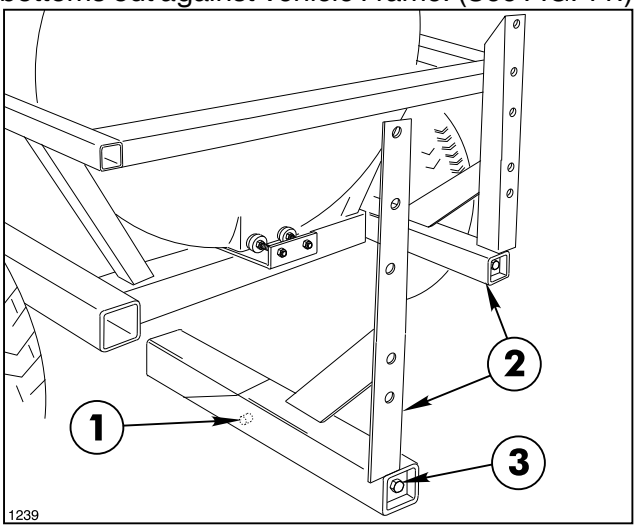

FIG. 11

1. Stop Pin
2. Boom Mount Ass'y.
3. 1/2" x 18" screws

3. Using a torque wrench, tighten the 1/2" x 18" screws that join the Wedges to the Boom Mounts. Tighten to 50 ft. lbs (68N-m).

4. Install the (2) Boom Hold-In Assemblies to the top of the Boom Mount uprights using four (4) 1/2" x 1-1/4" cap screws, flat washers and lock nuts. See FIG. 12,

5. Attach the two "U"-shaped Boom Mounting Brackets to the bottom of the Boom Mount uprights with (4) 1/2" x 1-1/4" cap screws, and lock nuts. (See FIG. 12.)

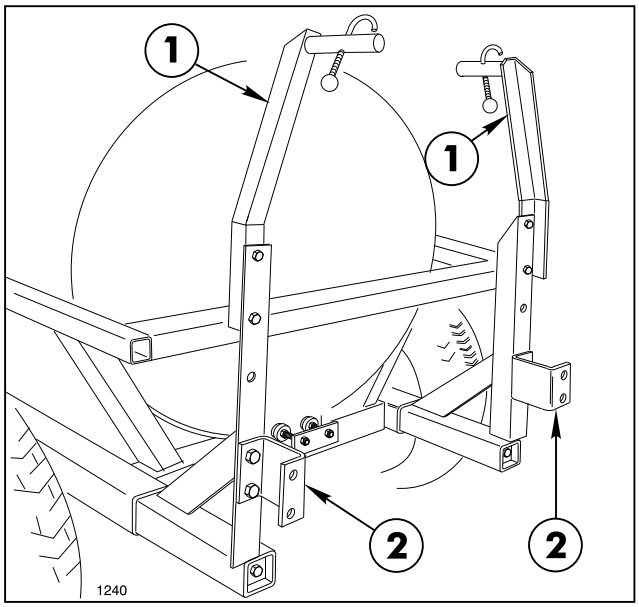

FIG. 12

1. Boom Hold-In Ass'y.
2. Boom Mounting Bracket

6. Position a Spacer Tube between the lugs on each side of the Main Frame tube and between Main Frame and Boom Mounting Brackets. Insert a 1/2" x 3-1/2" cap screw through the lugs and spacers. Secure the Main Frame to the Boom Mounting Brackets with lock nuts. See FIG. 13.

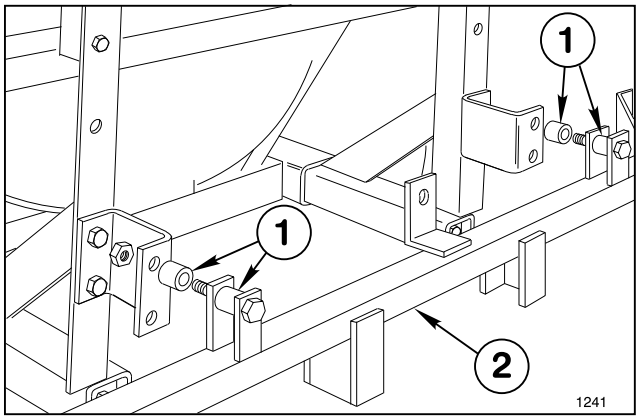

FIG. 13

1. Spacer Tube
2. Main Frame

7. Position the two (2) Center Boom angles on the Main Frame and secure them to the Main Frame tube with (2) square U-bolts, (4) flat washers and hex nuts. See FIG. 14.

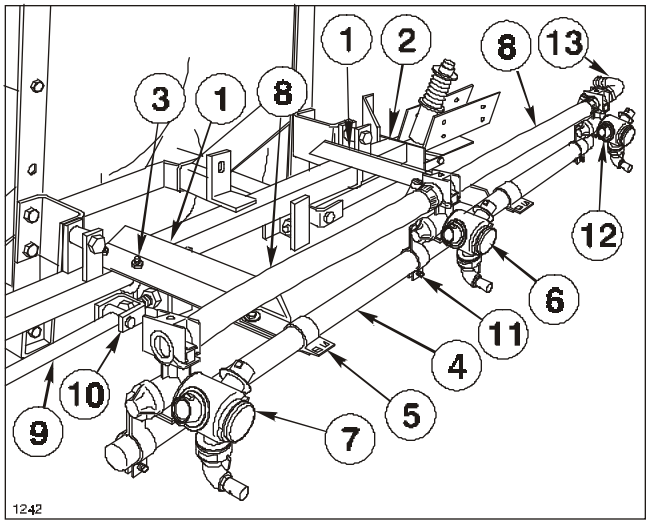

FIG. 14

1. Center Boom Angle
2. Main Frame
3. U-bolt
4. Center Boom Pipe
5. Boom Clamp
6. Double Barb Turret
7. Single Barb Turret
8. Jumper Hose
9. Strut Assembly
10. Adjustable Clevis
11. Turret Body Clamp
12. Threaded Barb Turret
13. 90° Hose Barb

8. Center and attach the Center Boom Pipe to the two Center Boom Angles with two (2) clamps, (2) 3/8" x 1" cap screws, flat washers and lock nuts. Once mounted, the Center Boom Pipe should be approx. 20" (508mm) from ground.

9. Loosely attach the Double Barb Turret Body with the Turret Body Clamp in the approximate center of the Center Boom Pipe. For the most uniform spray coverage, position all Nozzles level as shown in FIG. 14.

10. Loosely attach a Single Barb Turret Body with the Turret Body Clamp to L.H. end of the Center Boom Pipe. Loosely attach a threaded Turret Body with the Turret Body Clamp to RH end of the Center Boom Pipe.

11. Place two Hose Clamps on two 3/4" x 19" Jumper Hoses and connect the two "end" Turret Bodies to the Double Barb Turret Body. Space nozzles 20" apart and tighten fasteners securely. Apply thread sealer and install the 90° 3/4" Hose Barb on the Threaded Turret Body. See FIG. 14.

12. Attach the two Strut Assemblies to the two adjustable clevis' found on each side of the Main Frame tube with two (2) 1/2" x 2" clevis pins and two (2) 1/8" x 1" cotter pins. See FIG. 14.

IMPORTANT! DO NOT overtighten the nuts in steps 13 and 15. The clamping action could crush the Boom Pipe.

13. Insert the plugged end of an Extension Boom Pipe into the Pivot Assembly and secure with four (4) 1/4" x 1-1/4" cap screws and lock nuts. See FIG. 15 Repeat on the opposite side to assemble the other Extension Boom.

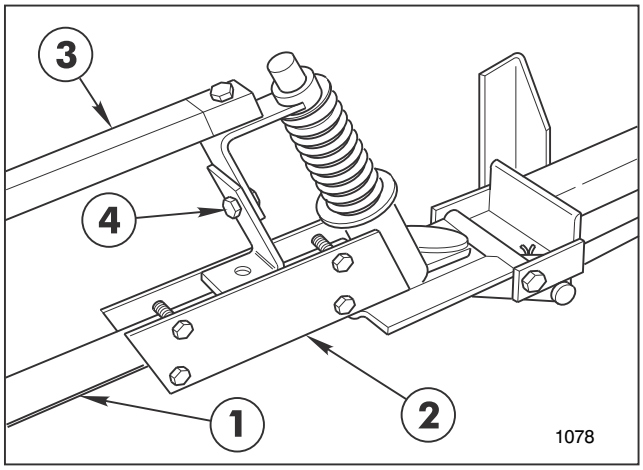

FIG. 15

1. Extension Boom Pipe
2. Pivot Assembly
3. Boom Support Assembly
4. Height Adjustment

14. Attach the L.H. Boom Support Assembly to the Pivot Assembly, using a 5/16" x 1-1/2" cap screw and lock nut. See FIG. 15 & 16.)

15. Secure the two plates of the Boom Support Assembly to the Extension Boom Pipe, using two (2) 1/4" U-bolts, four (4) lock nuts and flat washers. See FIG. 16.

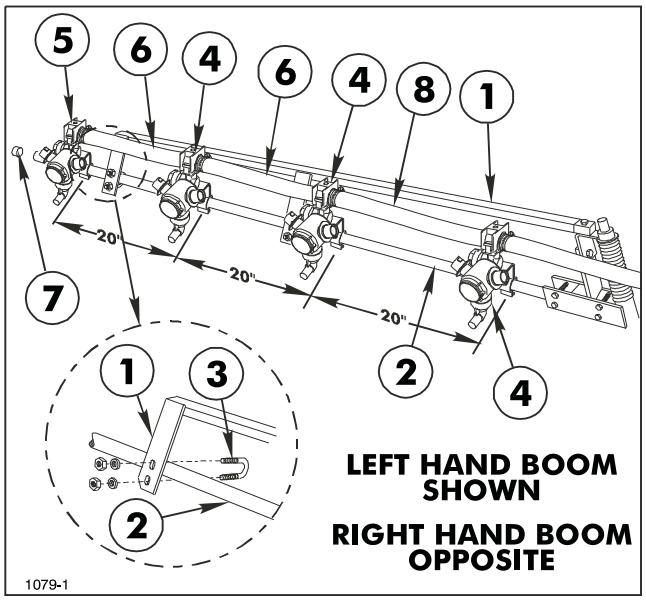

FIG 16

1. Boom Support Ass'y
2. Extension Boom Pipe
3. U-bolt
4. Double Barb Turret
5. Single Barb Turret
6. Jumper Hose 3/4" x 19"
7. Boom Cap
8. Jumper Hose 3/4" x 21"

16. Assemble the RH Boom Support Assembly to the other Extension Boom Pipe.

17. Adjust the Booms to a level position by adjusting the jam nuts on the adjustable clevis assemblies (See FIG. 14) to the desired position, then tighten the end nuts against the Main Frame plate.

18. Attach three Double Barb Turret Bodies and one Single Barb Turret Body with Clamp Assemblies on each Extension Boom Pipe as shown in FIG. 16.

19. Level Nozzles and space 20" apart. Connect the Turret Body Assemblies with 3/4" x 19" Jumper Hoses and a 3/4" x 21" Jumper Hose. Secure with hose clamps. (See FIG. 16.)

20. Apply thread sealer and install (2) 1" Ball Valves into opposing ports of 1" Cross using (2) 1" Close Nipples. See FIG 17.

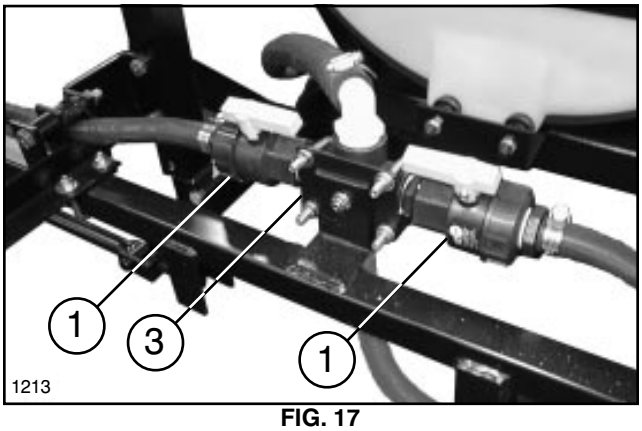

FIG. 17

1. 1" Ball Valve
2. 1" Cross
3. Cross Base

21. Apply thread sealer and install a 1" x 3/4" Hose Barb in the end of both Ball Valves.

22. Apply thread sealer and install 1" x 90° Barbed Elbow in the top port of the Cross.

23. Apply thread sealer and install a 1" x 3/4" Hose Barb in the bottom port of the Cross.

24. Mount Cross Base to Boom Frame using (1) 5/16" x 3/4" carriage bolt and flange nut. See FIG. 17.

IMPORTANT! DO NOT overtighten U-Bolts in step 25. The clamping action could crush the Cross.

25. Mount Cross Assembly to Cross Base, as shown in FIG. 17, using (2) 5/16" U-Bolts and (4) flange nuts.

26. Attach other end of the 1" x 64" Hose attached to Ratchet Valve earlier to the 90° Hose Barb in top of Cross. Secure with (1) 1" hose clamp.

NOTE: When cutting the hoses for the Extension Booms be sure to leave enough hose length to cross Booms.

27. Attach a 3/4" x 50" hose to L.H. Ball Valve and secure with hose clamp. Route hose under Spacer Tube between Boom Frame and Boom Mount toward L.H. Extension Boom. See FIG. 13 & 17. Mark Hose and cut to proper length. Attach hose to Double Barb Turret on inside of L.H. Extension Boom using hose clamp. See FIG 16. Repeat for R.H. Extension Boom.

28. Attach a 3/4" x 50" hose to Hose Barb in bottom of Cross. Route to 90° Hose Barb at R.H. end of Center Boom Pipe. (See FIG. 14) Mark Hose and cut to proper length. Attach hose to 90° Hose Barb using hose clamp.

CLEAN WATER WASH TANK:

1. Mount Hold-In Brace and Manual Tube to the right front side of Saddle Assembly using (2) 5/16" x 3/4" cap screws, flat washers, hex nuts and (1) R-Clamp. Tighten securely. See FIG. 18.

NOTE: Left Hold-In Brace and hardware will not be used.

2. Mount Wash Tank Bracket (open end forward) to Hold-In Brace using (2) 5/16" x 1" hex hd. cap screws, flat washers, and hex nuts. Place Clean Water Wash Tank into Wash Tank Bracket and secure with Rubber Hold-Down, as shown in FIG. 18.

NOTE: Tighten all fasteners and hose clamps securely before using the spray system.

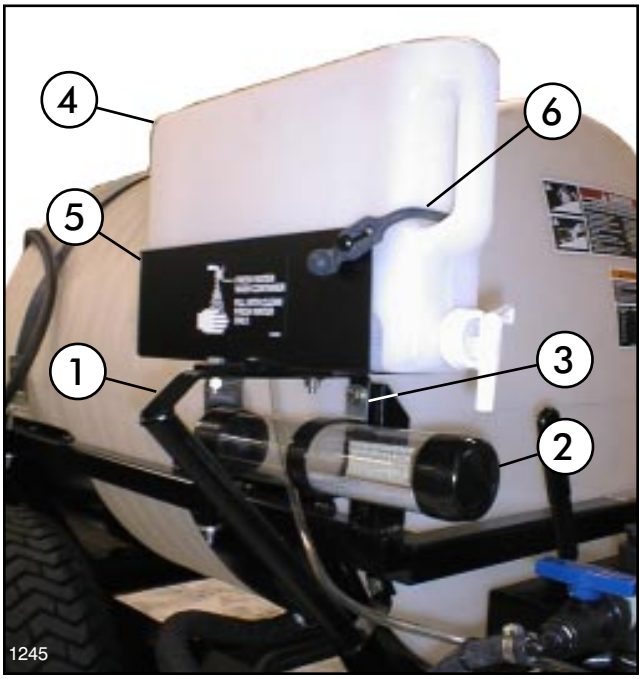

FIG. 18

1. Hold-In Brace
2. Manual Tube
3. R-Clamp
4. Clean Water Wash Tank
5. Wash Tank Bracket
6. Rubber Hold-Down

Skid Mode Set-Up Instructions

NOTE: The following instructions are for installing the 110 Gallon Skid Sprayer on a Workman Vehicle. If installing on a different vehicle some modification may be necessary.

SADDLE AND SKID:

1. Cut the shipping straps and remove the Spray Tank and Saddle Assembly from the shipping skid.

NOTE: In the following instructions, "thread sealer" refers to Teflon thread tape.

NOTE: The end of the Tank with Safety Decals is the L.H. side of Tank and Saddle Assembly when being used in skid mode.

2. Secure the 1/2" x 42" Agitator Hose to the 90° Barbed Elbow in bottom of Tank using (1) Hose Clamp. Assure that the Barbed Elbow is pointing to the front of Tank.

3. Apply thread sealer and install the 1-1/4" x 90° Barbed Elbow into the bottom of the Tank so that it is pointing to the front of tank.

4. Secure the 1-1/4" x 36" Suction Hose to the 90° Barbed Elbow in bottom of Tank using (1) Hose Clamp.

5. Set the Tank Saddle Assembly on the bed of the transport vehicle with the Safety Decals on the Tank to the L.H. side of vehicle.

6. Slide the (4) Connector Tubes into the Saddle Assembly. Secure with (4) 1/2" x 3-1/2" cap screws and flange nuts. See FIG. 1.

7. Secure the (4) Mounting Brackets to Connector Tubes using (8) 1/2" x 1-1/2" cap screws and flange nuts.

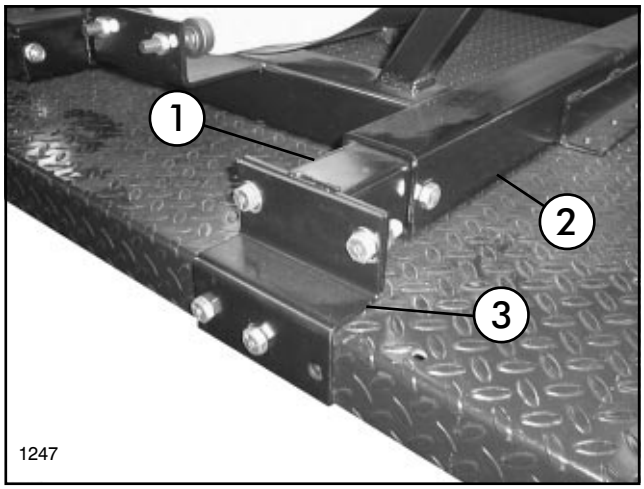

FIG. 1

1. Connector Tubes
2. Saddle Assembly
3. Mounting Brackets

NOTE: If installing the Skid Sprayer on a vehicle other than the Workman use the dimensions below as a general guideline. Be sure that the Tank is as far in front of the rear axle as possible.

8. Locate the Saddle Assembly on Cargo Bed, as shown in FIG. 2. Use holes in Mounting Brackets to drill (2) 17/32" diameter holes per Mounting Bracket.

IMPORTANT! Before drilling any holes check the location of crossmembers in the Cargo Bed. Location of the crossmembers will determine which two of the three holes in each of the Mounting Brackets you use.

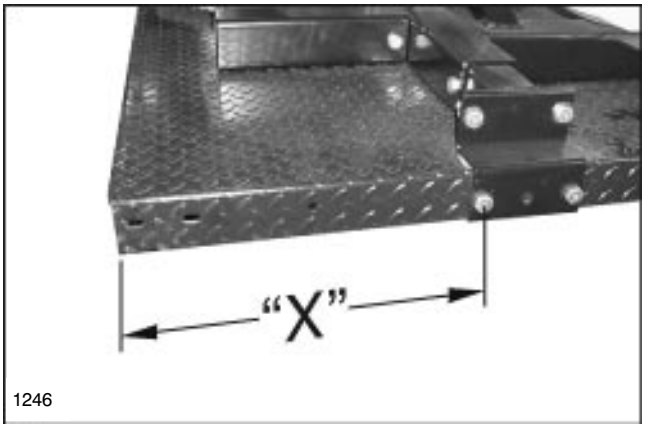

FIG. 2

Full & 2/3 Cargo Bed X = 15.5" (393mm)
2/3 Cargo Bed w/side rails X = 13.5" (343mm)

9. Attach Mounting Brackets to Cargo Bed using (8) 1/2" x 1-1/2" cap screws and flange nuts. See FIG. 1 & 2.

10. Slide the Engine / Pump Base on to the mount tubes on the rear of the Saddle Assembly. Secure using (2) 1/2" x 3-1/2" cap screws and flange nuts. See FIG. 3.

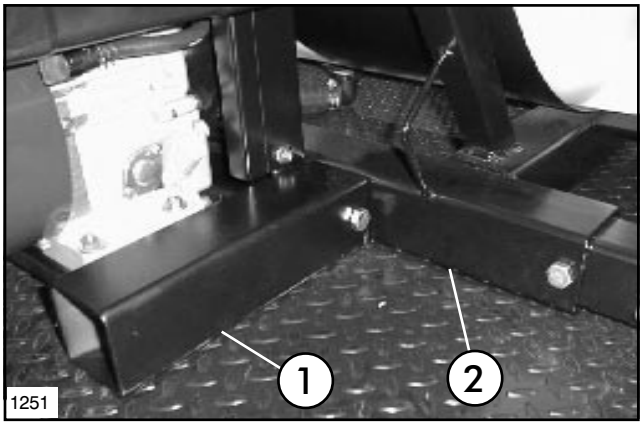

FIG. 3

1. Engine / Pump Base
2. Saddle Assembly

DIAPHRAGM PUMP:

1. Secure the Strainer Bracket to the front R.H. side of Engine / Pump Base using studs on Engine / Pump Base and (2) 5/16" flange nuts. See FIG. 4.



FIG. 4
1. Strainer Bracket

NOTE: The arrow on the top of Suction Strainer indicates direction of flow. The arrow should point away from 1-1/4" Ball Valve.

2. Apply thread sealer and attach the 1-1/4" Ball Valve into the inlet port of the Suction Strainer using (1) 1-1/4" close nipple. See FIG. 5.

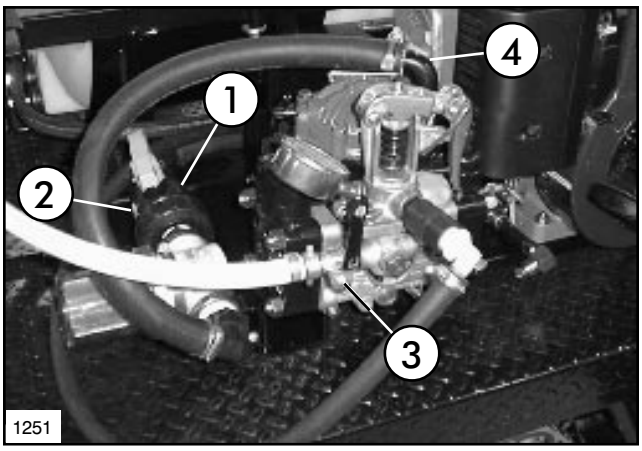

FIG. 5
1. Suction Strainer
2. 1-1/4" Ball Valve
3. 1/2" Ball Valve
4. 1" x 90° Hose Barb

3. Apply thread sealer and install (1) 45° Elbow and 1-1/4" Hose Barb into the 1-1/4" Ball Valve.

4. Apply thread sealer and install (1) 90° Hose Barb into the outlet port of the Suction Strainer.

5. Secure Suction Strainer to Strainer Bracket using (1) hose clamp.

6. Attach the other end of the 1-1/4" x 36" Suction Hose earlier attached to bottom of Tank to hose barb in Ball Valve. Secure with hose clamp.

7. Connect Suction Strainer to the 1" x 90° Hose Barb in top of Pump with 1" x 24" suction hose. Secure with (2) hose clamps.

8. Attach (1) Hose Hook to the R.H. and L.H. rear corners of Saddle Assembly. See FIG. 6.

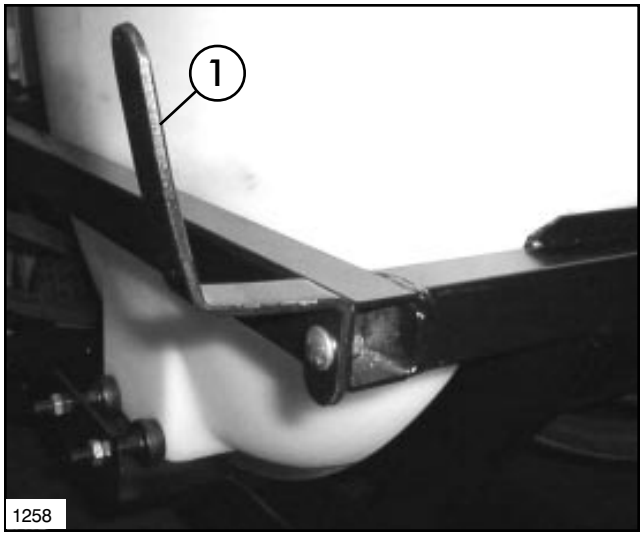

FIG. 6
1. Hose Hook

9. Apply thread sealer and attach the 25' Spray Gun Hose to Spray Gun using fitting already installed in Spray Gun Hose.

10. Attach other end of Spray Gun Hose to 1/2" Ball Valve in Pump. See FIG. 5. Wrap Spray Gun Hose around Hose Hooks when not in use.

NOTE: If installing the optional 41020 Center Boom. Skip Steps 11 and 12 and proceed to the Relief Valve and Ratchet Valve Section. If not installing the optional 41020 Center Boom steps 11 and 12 completes your set-up.

11. Install (1) 1/2" x 90° Hose Barb into the front port Pressure Relief/Adjustment Valve using (1) 1/2" Close Nipple and Coupling. See FIG. 5.

12. Attach the other end of the 1/2" x 42" Agitator Hose earlier attached to bottom of Tank to the 1/2" x 90° Hose Barb in the front port of the Pressure Relief/Adjustment Valve. Secure with 1/2" hose clamp.

PRESSURE ADJUST AND RATCHET VALVE:

1. Install (1) 1/2" Barbed Tee into the front port of the Pressure Relief/Adjustment Valve using (1) 1/2" Nipple and Coupling. See FIG. 7.

2. Attach the other end of the 1/2" x 42" Agitator Hose earlier attached to bottom of Tank to 1/2" Barbed Tee in the front port of the Pressure Relief/ Adjustment Valve. Secure with 1/2" hose clamp.

3. Remove the plug from the R.H. port of the Pressure Relief/Adjustment Valve.

4. Loosen the (2) hex nuts securing the Pressure Relief/Adjustment Valve to the Diaphragm Pump. Apply thread sealer and install the 1/2" Ball Valve into the R.H. port of the Pressure Relief/Adjustment Valve and retighten hex nuts. See FIG. 7.

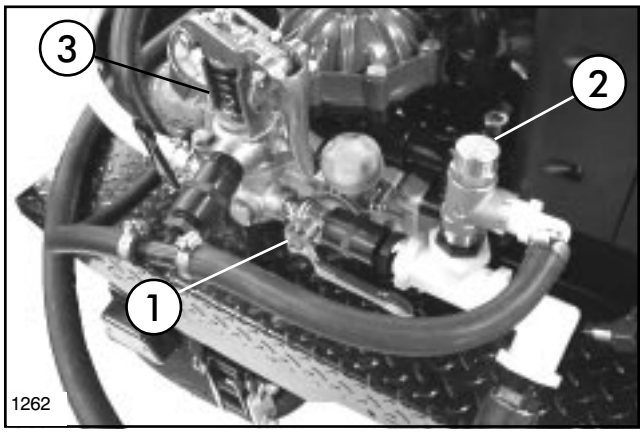

FIG. 7

1. 1/2" Ball Valve
2. Relief Valve
3. Pressure Relief/ Adjustment Valve

5. Apply thread sealer and attach the 3/4" tee to the 1/2" ball valve using (1) 1/2" coupling and (1) 1/2" x 3/4" reducing nipple.

6. Apply thread sealer and install the Relief Valve in the top port in tee using (1) 3/4" x 1/2" reducing bushing as shown in FIG. 7.

7. Apply thread sealer and install (1) 1/2" hose barb in open port in Relief Valve. Connect Relief Valve and barbed tee using (1) 1/2" x 21" hose and (2) hose clamps.

8. Apply thread sealer and install a 3/4" x 1" hose barb in the L.H. port of the tee.

9. Secure the Valve Plate to the rear bar of the Saddle Assembly using (2) U-Bolts and (4) 5/16" flange nuts. See FIG. 8.

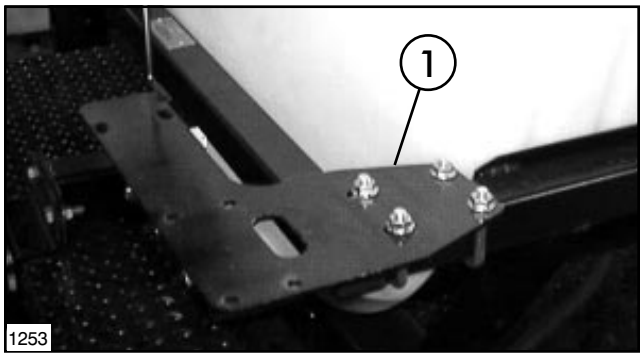

FIG. 8

1. Valve Plate

10. Apply thread sealer and install a 3/4" x 90° Elbow and 3/4" x 1" hose barb in port in Ratchet Valve opposite the Valve Handle resting position. See FIG 9.

11. Apply thread sealer and install a 3/4" x 1" hose barb into both ports in the Ratchet Valve. See FIG 9.

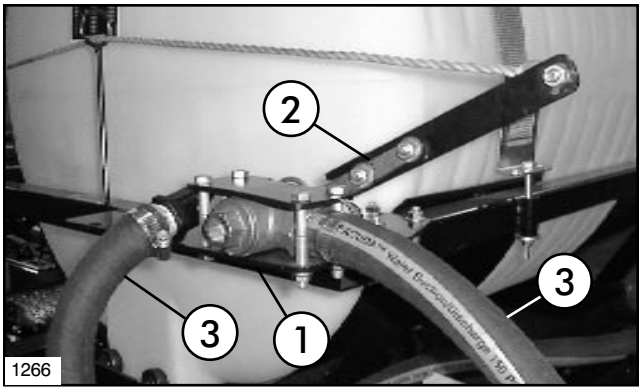

FIG. 9

1. Valve Bracket
2. Ratchet Valve
3. 1 x 36" Hose

NOTE: The lever on Ratchet Valve should rest pointing toward rear of vehicle.

IMPORTANT! DO NOT overtighten the nuts in step 12.

12. Attach Valve Plate Top to Valve Plate over Ratchet Valve as, shown in FIG. 9, using (4) 5/16" x 2-1/2" cap screws and flange nuts.

13. Connect Ratchet Valve to tee at pump with (1) 1" x 36" Hose and (2) hose clamps. See FIG. 7 & 9

14. Secure the 1" x 44" Hose to hose barb in the rear of the Ratchet Valve using (1) hose clamp. Route toward rear of vehicle.

15. Attach handle to Ratchet Valve using (2) 5/16" x 3/4" cap screws and flange nuts.

16. Attach the Pull Rope to Ratchet Valve handle using 5/16" x 3/4" cap screw and flange nut.

17. Route Pull Rope along L.H. side of operator for ease of actuating Ratchet Valve. Provided are (2) Ring Guides, (2) R-Clamps, (1) Ring Terminal, (1) Pull Rope Handle, (2) 5/16" x 3/4" cap screws and flange nuts. Use as needed to route Pull Rope.

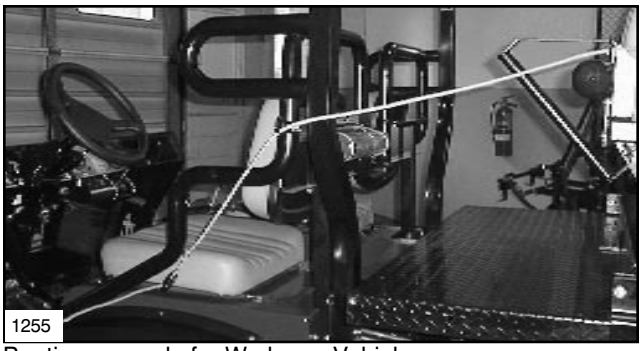

Routing example for Workman Vehicle

BOOM FRAME ASSEMBLY:

1. Apply a heavy coating of grease to the tubes of the two Boom Mount Assemblies and insert them into the Vehicle Frame until Stop Pin bottoms out against Vehicle Frame. (See FIG. 10.)

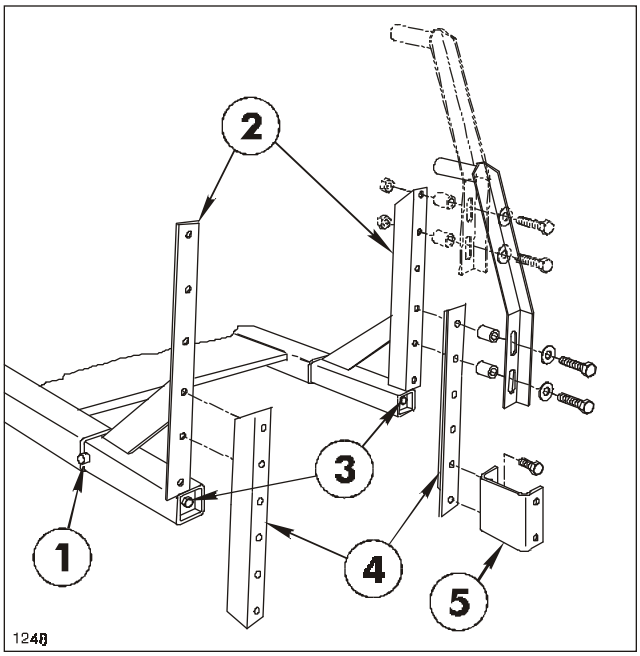

FIG. 10

1. Stop Pin
2. Boom Mount Ass'y.
3. 1/2" x 18" screws
4. Boom Angle
5. Boom Mounting Brackets

2. Using a torque wrench, tighten the 1/2" x 18" screws that join the Wedges to the Boom Mounts. Tighten to 50 ft. lbs. (68 N-m).

NOTE: Attach the Boom Mounting Brackets so that the bottom surface of the brackets are 20" to 30" above the ground. If necessary use the (2) Boom Angles to obtain the proper height.

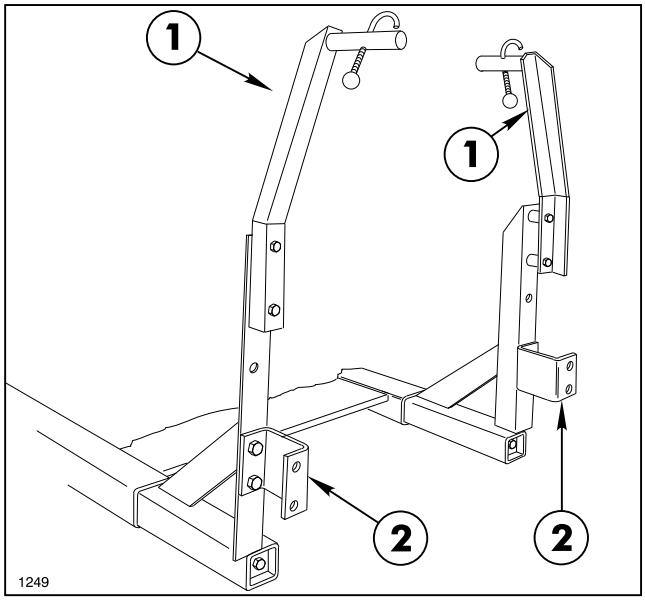

FIG. 11

1. Boom Hold-In Ass'y.
2. Boom Mounting Bracket

3. Attach the (2) "U"-shaped Boom Mounting Brackets to the proper holes in the Boom Mount uprights or Boom Angles with (4) 1/2" x 1-1/4" cap screws, and lock nuts. (See FIG. 10 & 11.)

4. Install the (2) Boom Hold-In Assemblies to the top of the Boom Mount uprights or Boom Angles using (4) 1/2" x 1-1/4" cap screws, flat washers, spacer tubes and lock nuts. See FIG. 10 & 11.

5. Position a Spacer Tube between the lugs on each side of the Main Frame tube and between Main Frame and Boom Mounting Brackets. Insert a 1/2" x 3-1/2" cap screw through the lugs and spacers. Secure the Main Frame to the Boom Mounting Brackets with lock nuts. See FIG. 12.

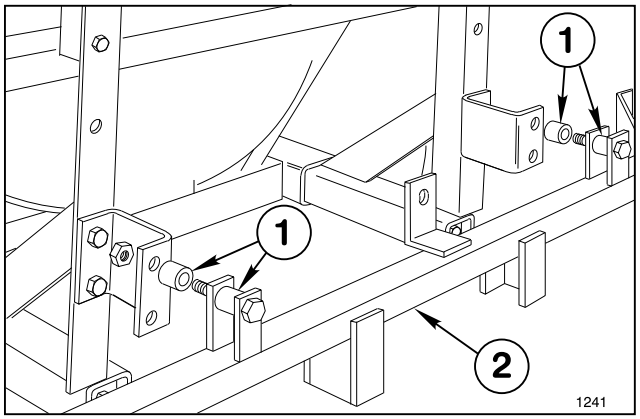

FIG. 12

1. Spacer Tube
2. Main Frame

6. Position the (2) Center Boom angles on the Main Frame and secure them to the Main Frame tube with (2) square U-bolts, (4) flat washers and hex nuts. See FIG. 13.

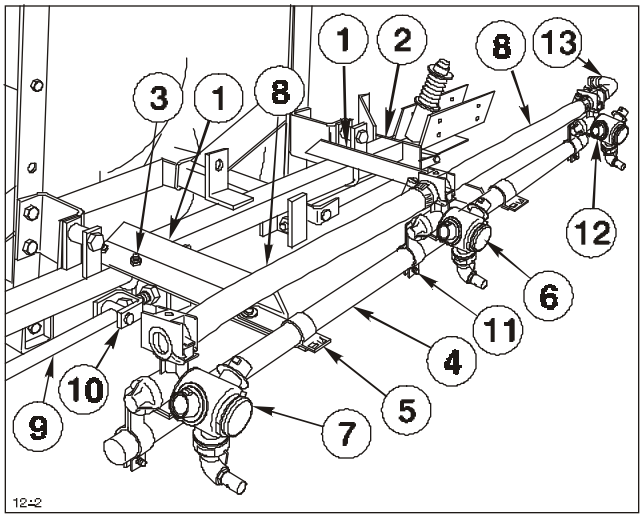

FIG. 13

1. Center Boom Angle
2. Main Frame
3. U-bolt
4. Center Boom Pipe
5. Boom Clamp
6. Double Barb Turret
7. Single Barb Turret
8. Jumper Hose
9. Strut Assembly
10. Adjustable Clevis
11. Turret Body Clamp
12. Threaded Barb Turret
13. 90° Hose Barb

7. Center and attach the Center Boom Pipe to the two Center Boom Angles with (2) clamps, (2) 3/8" x 1" cap screws, flat washers and lock nuts. Once mounted the Center Boom Pipe should be approx. 20" (508mm) to 30" (762mm) from ground.

8. Loosely attach the Double Barb Turret Body with the Turret Body Clamp in the approximate center of the Center Boom Pipe. For the most uniform spray coverage, position all Nozzles level as shown in FIG. 13.

9. Loosely attach a Single Barb Turret Body with the Turret Body Clamp to L.H. end of the Center Boom Pipe. Loosely attach a threaded Turret Body with the Turret Body Clamp to R.H. end of the Center Boom Pipe.

10. Place two Hose Clamps on two 3/4" x 19" Jumper Hoses and connect the two "end" Turret Bodies to the Double Barb Turret Body. Space nozzles 20" apart and tighten fasteners securely. Apply thread sealer and install the 90° 3/4" Hose Barb on the Threaded Turret Body. See FIG. 13.

11. Attach the two Strut Assemblies to the two adjustable clevis' found on each side of the Main Frame tube with (2) 1/2" x 2" clevis pins and (2) 1/8" x 1" cotter pins. See FIG. 13.

IMPORTANT! DO NOT overtighten the nuts in steps 12 and 14. The clamping action could crush the Boom Pipe.

12. Insert the plugged end of an Extension Boom Pipe into the Pivot Assembly and secure with four (4) 1/4" x 1-1/4" cap screws and lock nuts. See FIG. 14. Repeat on the opposite side to assemble the other Extension Boom.

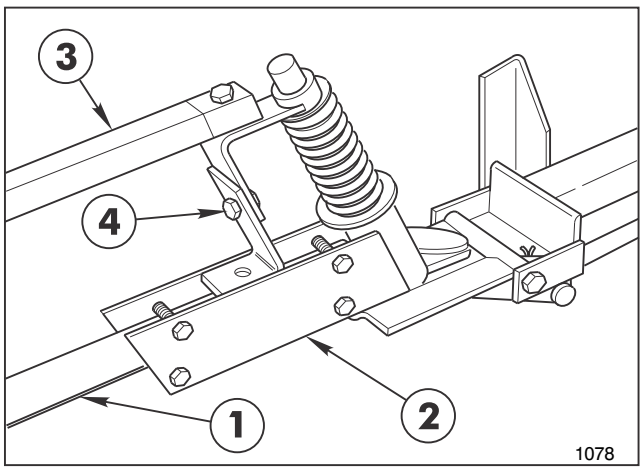

FIG. 14

1. Extension Boom Pipe
2. Pivot Assembly
3. Boom Support Assembly
4. Height Adjustment

13. Attach the L.H. Boom Support Assembly to the Pivot Assembly, using a 5/16" x 1-1/2" cap screw and lock nut. See FIG. 15 & 16.

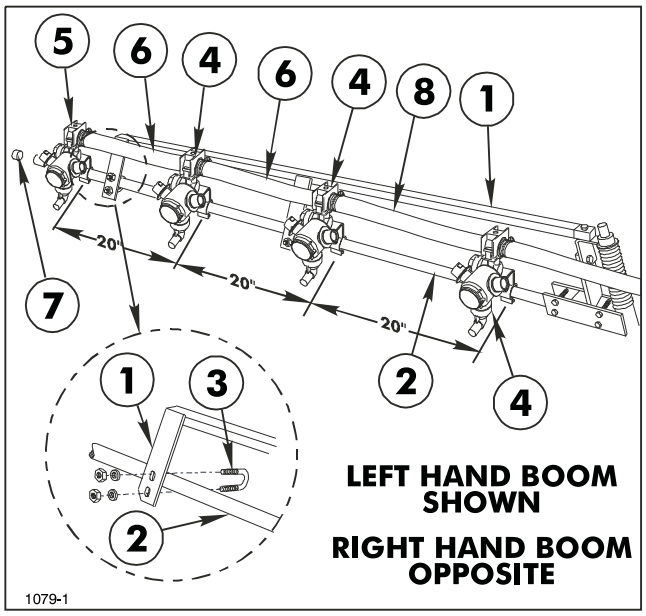

FIG 15

1. Boom Support Ass'y
2. Extension Boom Pipe
3. U-bolt
4. Double Barb Turret
5. Single Barb Turret
6. Jumper Hose 3/4" x 19"
7. Boom Cap
8. Jumper Hose 3/4" x 21"

14. Secure the two plates of the Boom Support Assembly to the Extension Boom Pipe, using two (2) 1/4" U-bolts, (4) lock nuts and flat washers. See FIG. 15.

15. Assemble the RH Boom Support Assembly to the other Extension Boom Pipe.

16. Adjust the Booms to a level position by adjusting the jam nuts on the adjustable clevis assemblies (See FIG. 13) to the desired position, then tighten the end nuts against the Main Frame plate.

17. Attach three Double Barb Turret Bodies and one Single Barb Turret Body with Clamp Assemblies on each Extension Boom Pipe as shown in FIG. 15.

18. Level Nozzles and space 20" apart. Connect the Turret Body Assemblies with 3/4" x 19" Jumper Hoses and a 3/4" x 21" Jumper Hose. Secure with hose clamps. See FIG. 15.

19. Apply thread sealer and install (2) 1" Ball Valves into opposing ports of 1" Cross using (2) 1" Close Nipples. See FIG 16.

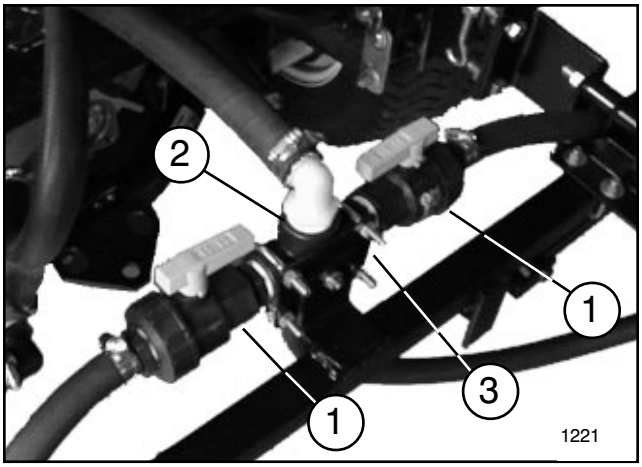

FIG. 16

1. 1" Ball Valve
2. 1" Cross
3. Cross Base

20. Apply thread sealer and install a 1" x 3/4" Hose Barb in the end of both Ball Valves.

21. Apply thread sealer and install 1" x 90° Barbed Elbow in the top port of the Cross.

22. Apply thread sealer and install a 1" x 3/4" Hose Barb in the bottom port of the Cross.

23. Mount Cross Base to Boom Frame using (1) 5/16" x 3/4" carriage bolt and flange nut. See FIG. 16.

IMPORTANT! DO NOT overtighten U-Bolts in step 24. The clamping action could crush the Cross.

24. Mount Cross Assembly to Cross Base, as shown in FIG. 16, using (2) 5/16" U-Bolts and (4) flange nuts.

25. Attach other end of the 1" x 64" Hose attached to Ratchet Valve earlier to the 90° Hose Barb in top of Cross. Secure with (1) 1" hose clamp.

NOTE: When cutting the hoses for the Extension Booms be sure to leave enough hose length to cross Booms.

26. Attach a 3/4" x 50" hose to L.H. Ball Valve and secure with hose clamp. Route hose under Spacer Tube between Boom Frame and Boom Mount toward L.H. Extension Boom. See FIG. 12 & 16. Mark Hose and cut to proper length. Attach hose to Double Barb Turret on inside of L.H. Extension Boom using hose clamp. See FIG 15. Repeat for R.H. Extension Boom.

27. Attach a 3/4" x 50" hose to Hose Barb in bottom of Cross. Route to 90° Hose Barb at R.H. end of Center Boom Pipe. (See FIG. 13) Mark Hose and cut to proper length. Attach hose to 90° Hose Barb using hose clamp.

28. Connect closed end of Turnbuckle to the Lug & Chain using (1) Lap Link. Secure by squeezing Lap Link closed. See FIG. 17.

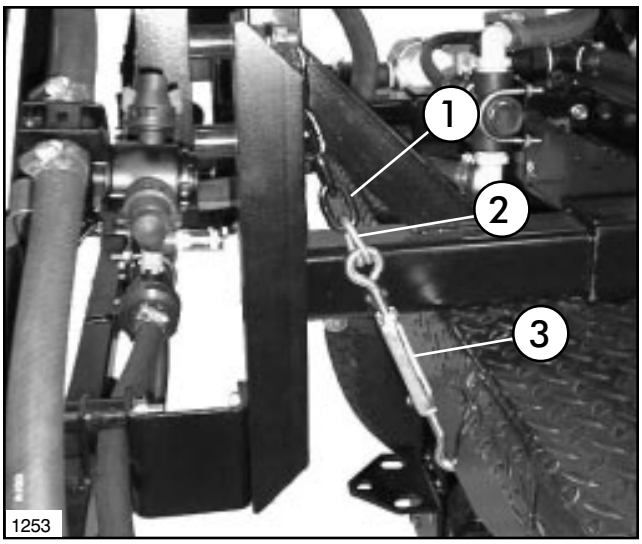

FIG. 17

1. Lug & Chain
2. Lap Link
3. Turnbuckle

29. Attach lug on Turnbuckle Assembly to R.H. Boom Mount Assembly using (1) 1/2" flange nut. Hook other end under Cargo Bed frame and tighten securely.

30. Repeat steps 28 & 29 for L.H. Boom Mount Assembly.

CLEAN WATER WASH TANK:

1. Mount Hold-In Brace and Manual Tube to the right front side of Saddle Assembly using (2) 5/16” x 3/4” cap screws, flat washers, hex nuts, (1) R-Clamp. Tighten securely. See FIG. 18.

NOTE: Left Hold-In Brace and hardware will not be used.

2. Mount Wash Tank Bracket (open end forward) to Hold-In Brace using (2) 5/16" x 1" hex hd. cap screws, flat washers, and hex nuts. Place Clean Water Wash Tank into Wash Tank Bracket and secure with Rubber Hold-Down, as shown in FIG. 18.

NOTE: Tighten all fasteners and hose clamps securely before using the spray system.

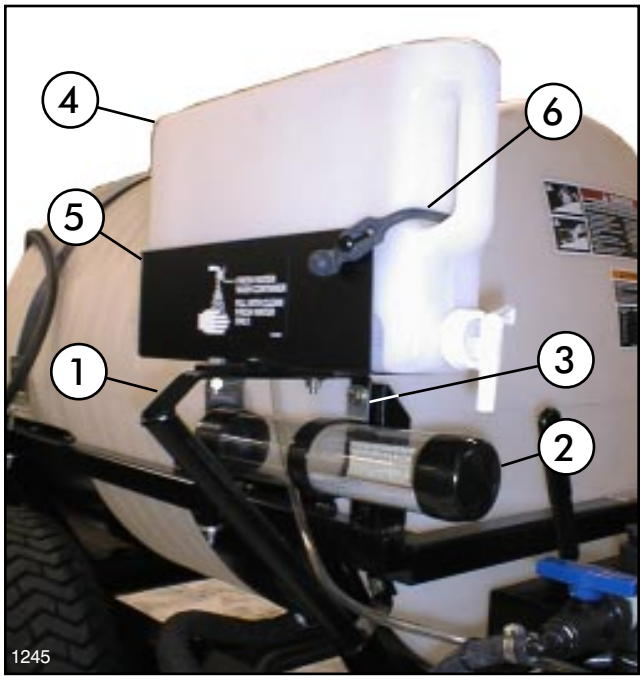

FIG. 18

1. Hold-In Brace
2. Manual Tube
3. R-Clamp
4. Clean Water Wash Tank
5. Wash Tank Bracket
6. Rubber Hold-Down

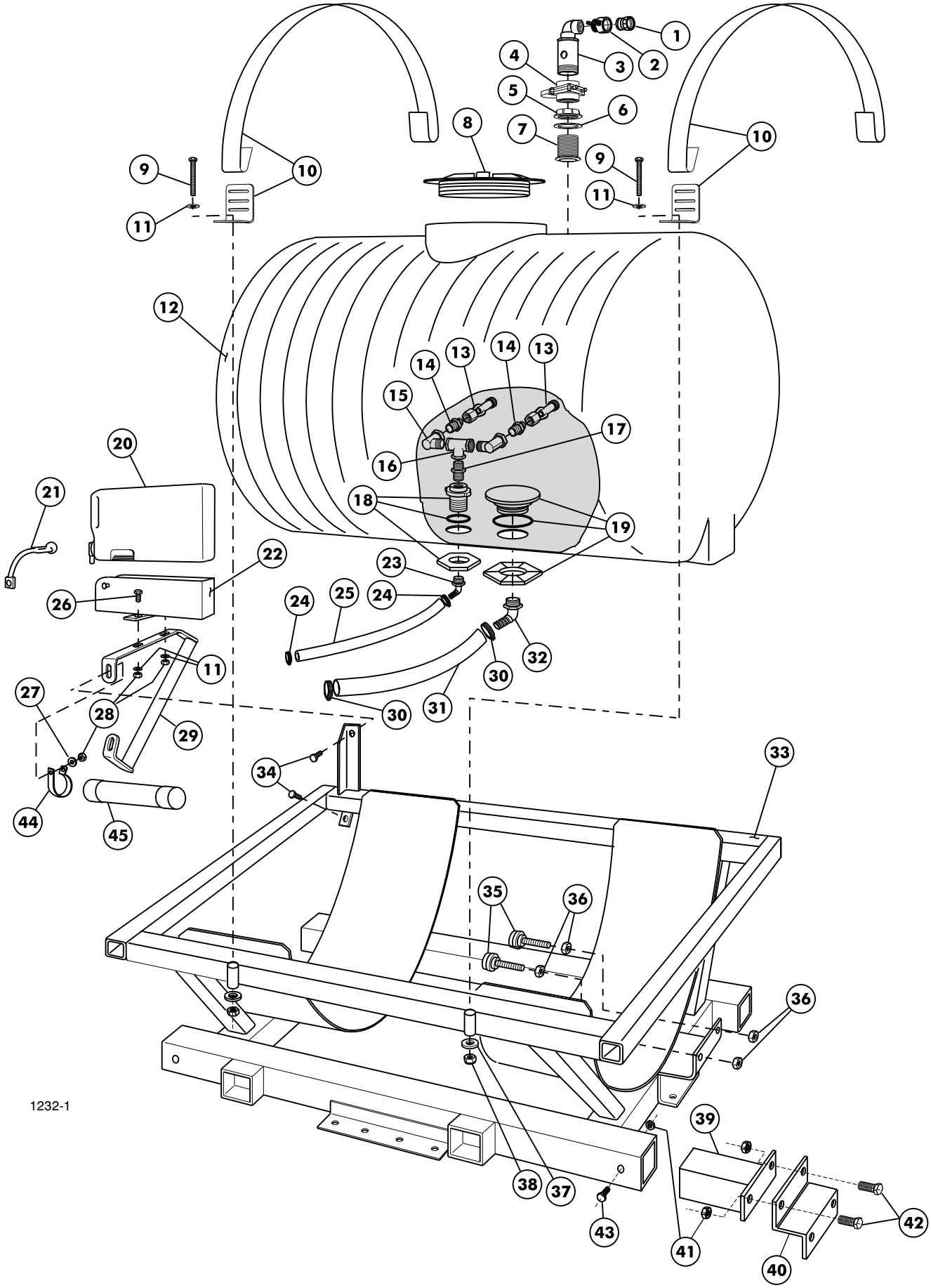
1
2
3
4
5
6
7
8
9
10
11
12
13
14
15
16
17
18
19
20
21
22
23
24
25
26
27
28
29
30
31
32
33
34
35
36
37
38
39
40
41
42
43
44
45
1232-1

TANK AND SADDLE

Ref	Part No.	Description	Qty
1	92-0238	Quick Coupler	1
2	041316	Quick Adapter	1
3	043069	Standup Assembly	1
4	043064	Knife Valve	1
5	043068	Fly Nut, 2" NPT	1
6	043067	Sealing Washer	1
7	043066	Bulk Head, 2" NPT	1
8	92-8412	Tank Cover 10" (f/w Tank Ass'y)	1
	92-8411	Fillwell Ass'y 10" (f/w Tank Ass'y)	1
9	322-19	Hex Hd Cap Screw 5/16" x 4"	4
10	92-8380	Tank Band	2
11	3256-23	Flatwasher, 5/16"	6
12	92-8377	Tank Assembly - 110 Gals.	1
13	92-8392	Jet Agitator	2
14	92-8541	Reducing Nipple 3/4" x 1/2"	2
15	042940	90° Street Elbow 3/4" NPT	2
16	042941	Tee, 3/4"	1
17	041294	Close Nipple, 3/4"	1
18	041801	Tank Fitting, 3/4" (f/w Tank Assy.)	1
19	041798	Anti-Vortex Fitting (f/w Tank Assy.)	1
20	92-3976	Clean Water Wash Tank	1
	93-0828	Spigot (f/w 92-3976 Tank)	1
21	042198	Rubber Hold-Down	1
22	92-3969	Wash Tank Bracket	1

Ref	Part No.	Description	Qty
23	92-8413	90° Hose Barb 3/4" MPT x 1/2" HB	1
24	96609	Hose Clamp	2
25	042946	Agitator Hose	1
26	322-5	Hex Hd Screw 5/16" x 1" UNC	2
27	3256-3	Flatwasher, 5/16"	2
28	3217-6	Hex Nut, 5/16" UNC	4
29	042983	Hold-in Brace Assembly	1
30	41327	Hose Clamp	2
31	95-9142	Suction Hose	1
32	93-0856	90° Elbow 1-1/4" MPT x 1-1/4" HB	1
33	95-9050	Saddle Assembly	1
34	322-3	Hex Hd Cap Scr 5/16" x 3/4" UNC	2
35	92-8367	Tank Bumper	4
36	3218-5	Hex Jam Nut 1/2"	8
37	356303	Washer, 5/16"	4
38	32153-3	Lock Nut, 5/16"	4
39	95-9076	Connector Tube - Welded	4
40	95-9075	Mounting Bracket	4
41	32128-49	Flange Locknut	12
42	325-6	Hex HD Cap Scr 1/2"-13 x 1 1/2"	8
43	325-14	Hex HD Cap Scr 1/2"-13 x 3 1/2"	4
44	42560	R-Clamp	1
45	42559	Tube	1

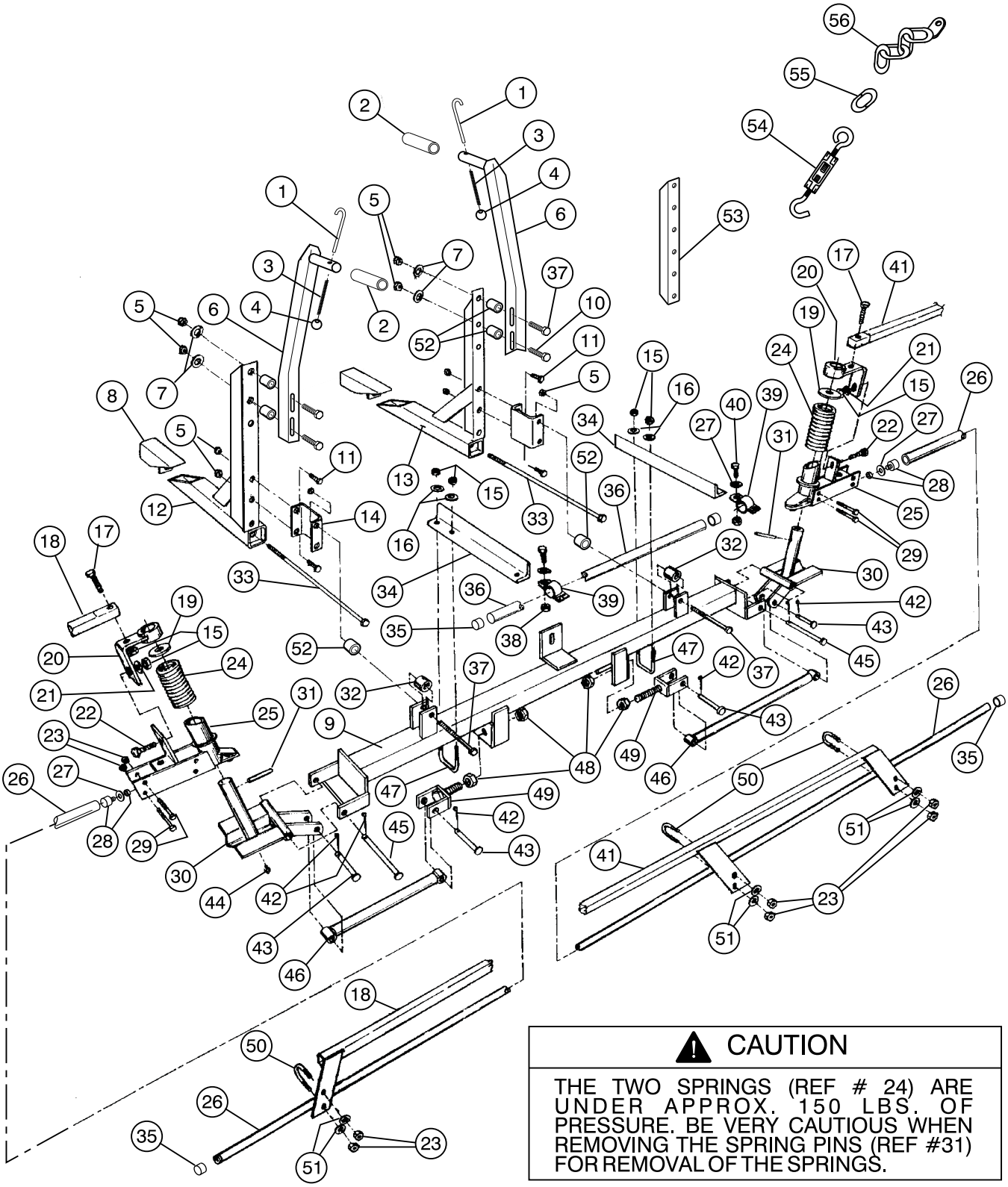

1320

⚠ CAUTION

THE TWO SPRINGS (REF # 24) ARE UNDER APPROX. 150 LBS. OF PRESSURE. BE VERY CAUTIOUS WHEN REMOVING THE SPRING PINS (REF #31) FOR REMOVAL OF THE SPRINGS.

IMPORTANT! THE TWO BOLTS (REF #33) MUST BE TORQUED TO 50 FT. LBS. (68N-m).

SPRAY BOOMS

Ref	Part No.	Description	Qty
1	92-8562	Hold-in Hook	2
2	92-8561	Hold-in Hose	2
3	92-8563	Hold-in Spring	2
4	92-8564	Hold-in Knob	2
5	32153-5	Hex Nut, 1/2" UNC	6
6	92-8534	Boom Hold-in Assembly	2
7	3256-6	Flat Washer 1/2"	4
8	42223	Tube Wedge Assembly	2
9	42227	Main Frame Tube	1
10	325-10	HHCS, 1/2” x 2-1/2” UNC	2
11	325-6	HHCS, 1/2” x 1-1/2” UNC	4
12	42217	Boom Mount Ass'y L.H.	1
13	42222	Boom Mount Ass'y R.H.	1
14	92-8533	Boom Mounting Brkt.	2
15	3217-6	Hex Nut, 5/16” UNC	14
16	3256-3	Flat Washer, 5/16”	6
17	322-7	HHCS, 5/16” x 1-1/2” UNC	2
18	42711	Boom Support Ass'y L.H.	1
19†	3256-62	Flat Washer 1"	2
20	42707	Support Bracket Ass'y	2
21	3256-23	Flat Washer, 5/16"	6
22	3230-1	Carriage Bolt 5/16” x 3/4” UNC	2
23	32146-17	Lock Nut 1/4” UNC	10
24†	42196	Compression Spring	2
25†	42706	Breakaway Pivot Ass'y	2
26	42282	Extension Boom Pipe Ass'y	2
27	3256-4	Flat Washer 3/8”	4

Ref	Part No.	Description	Qty
28	92-3749	Freeze Plug	2
29	321-10	HHCS 1/4” x 1-3/4” UNC	8
30†	42243	Hinge Ass'y	2
31†	32121-78	Spring Pin 1/4” x 2”	2
32	42257	Spacer Tube 1"	4
33	42199	HHCS 1/2” x 18” UNC	2
34	42234	Center Boom Angle	2
35	92-8420	Boom Cap	4
36	40493	Center Boom Pipe	1
37	325-14	HHCS 1/2” x 3-1/2” UNC	4
38	32153-2	Lock Nut 3/8” UNC	2
39	40494	Clamp Ass'y	2
40	323-6	HHCS 3/8” x 1” UNC	2
41	42710	Boom Support Ass'y R.H.	1
42	3272-11	Cotter Pin 1/8” x 1”	6
43	42195	Clevis 1/2” x 4-1/2”	2
44†	361011	Grease Fitting	2
45	42194	Clevis 1/2” x 4-1/2”	2
46	42240	Strut Ass'y	2
47	301950	U-Bolt 5/16” UNC	2
48	3217-11	Hex Nut 5/8”	4
49	42237	Adjustable Clevis Ass'y	2
50	92-0010	U-Bolt	4
51	3256-2	Flat Washer 1/4”	8
52	42258	Spacer Tube 1-1/4”	4
53	95-9090	Boom Angle	2

† - Denotes parts available in an assembled unit. Order #42840 Breakaway Assembly

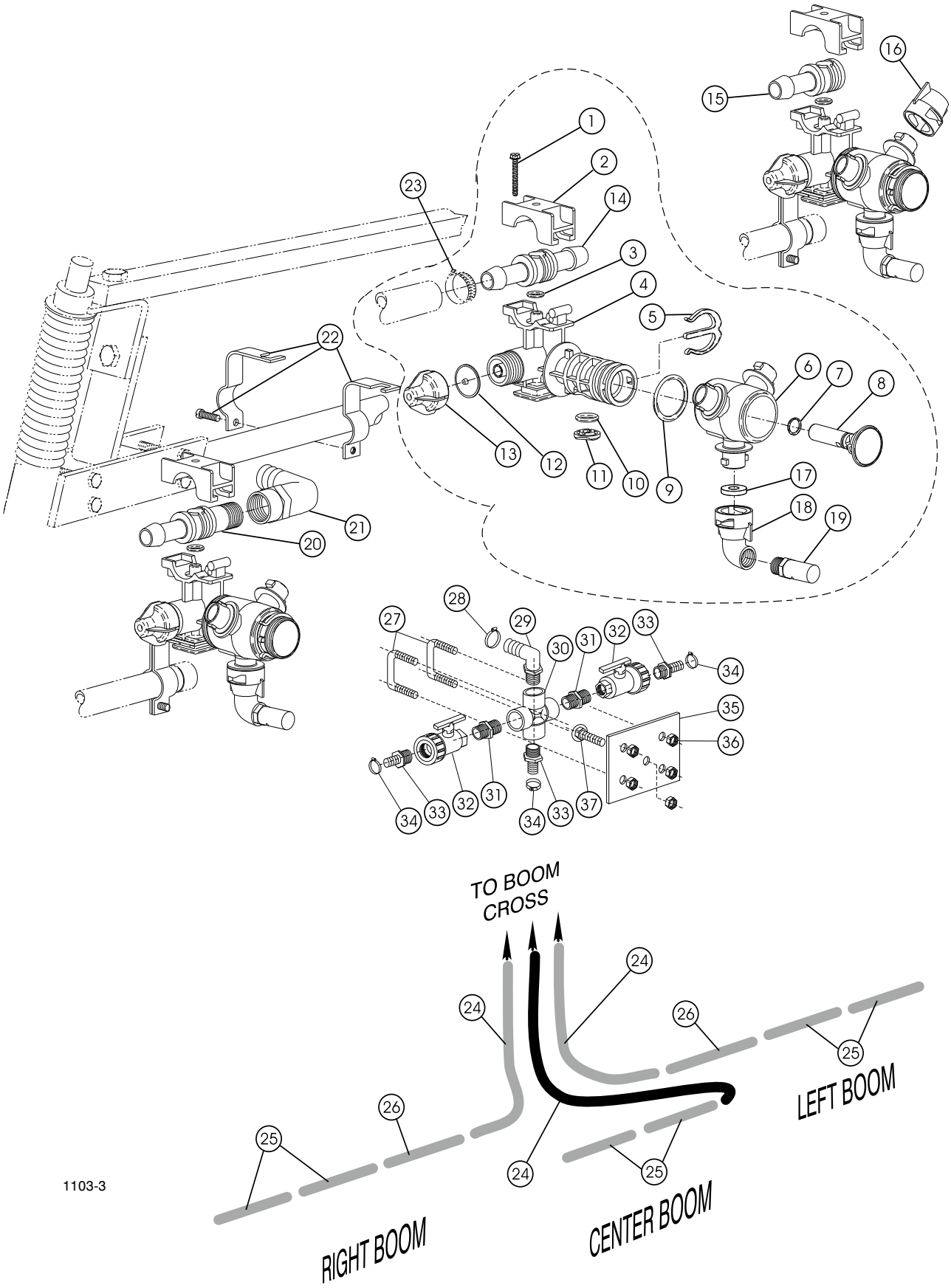
1
2
3
4
5
6
7
8
9
10
11
12
13
14
15
16
17
18
19
20
21
22
23
24
25
26
27
28
29
30
31
32
33
34
35
36
37
TO BOOM CROSS
LEFT BOOM
CENTER BOOM
RIGHT BOOM
1103-3

TURRET BODIES & BOOM HOSES

Ref	Part No.	Description	Qty
*	95-9183	Turret Body - Double Barb (Incl. Ref. #'s 1-14)	7
*	95-9181	Turret Body - Single Barb (Incl. Ref. #'s 1-13 & 15)	3
*	95-9184	Turret Body - Barb x 1/2" NPT (Incl. Ref. #'s 1-13 & 20)	1
1#	95-9189	Screw	1
2#	95-9190	Upper Clamp	1
†3#	95-9191	O-Ring	1
4#	95-9192	Split-Eyelet Body	1
5#	95-9197	E-Clip	1
6#	95-9196	Turret	1
†7#	95-9198	O-Ring	1
8#	95-9200	Plug	1
†9#	95-9199	O-Ring	1
†10#	95-9194	O-Ring	1
†11#	95-9195	Seal	1
†12#	41003	Diaphragm	1
13#	95-9193	End Cap Assembly	1
14	95-9202	Double Hose Barb	7
15	95-9201	Single Hose Barb	3
16	95-9187	Nozzle Dust Cap (Incl. Ref. # 17)	22
17	40998	Seat Gasket	33

Ref	Part No.	Description	Qty
18	95-9186	Nozzle Cap, 90° (Incl. Ref. # 17)	11
19	95-9188	TTJ10 Turbo TurfJet (Std.)	11
	95-9221	TTJ2 Turbo TurfJet (Optional)	11
	95-9222	TTJ4 Turbo TurfJet (Optional)	11
	95-9223	TTJ5 Turbo TurfJet (Optional)	11
	95-9224	TTJ6 Turbo TurfJet (Optional)	11
	95-9225	TTJ8 Turbo TurfJet (Optional)	11
	95-9226	TTJ15 Turbo TurfJet (Optional)	11
20	95-9203	Hose Barb x 1/2" NPT	1
21	95-9314	90° Elbow, 1/2" FPT x 3/4" H.B.	1
22	95-9185	Turret Body Clamp	11
23	92-0045	Hose Clamp, 3/4" Hose	22
24	41340	Boom Hose, 3/4" x 50"	3
25	40506	Jumper Hose, 3/4" x 19"	6
26	95-2229	Jumper Hose, 3/4" x 21"	2
27	92-3723	U-Bolt 5/16" (RD)	2
28	021146	Hose Clamp - 1"	1
29	041140	Elbow 90 - 1" x 1" HB	1
30	92-8416	Cross - 1"	1
31	041304	Close Nipple - 1"	2
32	040020	Ball Valve - 1"	2
33	92-0236	Hose Barb - 1" x 3/4" HB	3
34	92-0045	Hose Clamp - 3/4"	3
35	95-9216	Cross Base	1
36	32128-20	Whizlock Nut - 5/16"	5
37	3230-1	Carriage Bolt 5/16" x 3/4"	1

† Denotes parts in Seal Kit # 95-9316

These parts make up one body assembly

* Not illustrated

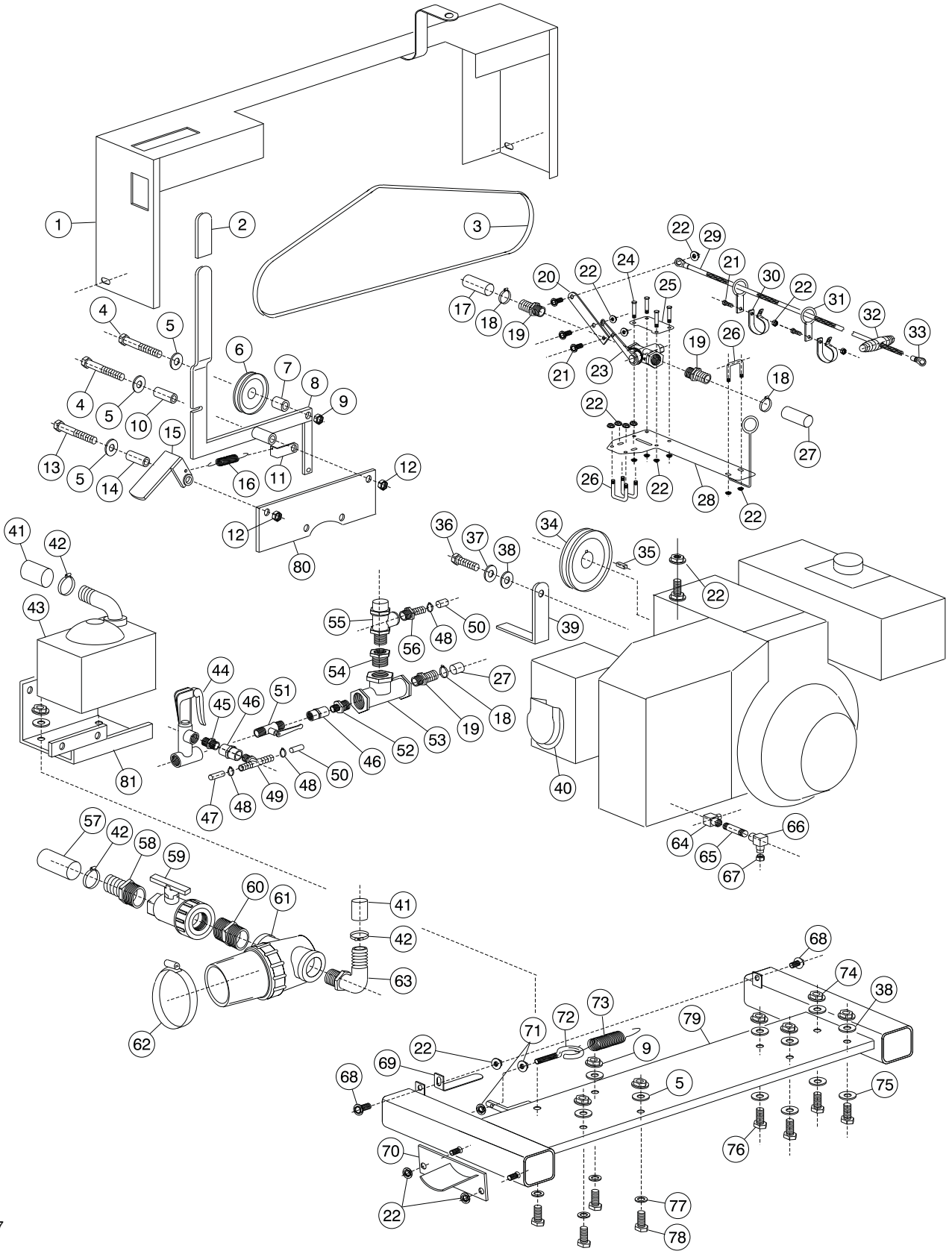
1
2
3
4
5
6
7
8
9
10
11
12
13
14
15
16
17
18
19
20
21
22
23
24
25
26
27
28
29
30
31
32
33
34
35
36
37
38
39
40
41
42
43
44
45
46
47
48
49
50
51
52
53
54
55
56
57
58
59
60
61
62
63
64
65
66
67
68
69
70
71
72
73
74
75
76
77
78
79
80
81

1567

41443 DIAPHRAGM PUMP

Ref	Part No.	Description	Qty
1	95-9115	Belt Cover Ass'y	1
2	041145	Lever Grip	1
3	041348	Belt	1
4	323-10	HHCS 3/8" x 2"	2
5	3256-4	Washer 3/8"	8
6	041353	Idler Pulley	1
7	92-3746	Spacer - Backside Idler	1
8	95-9104	Pulley Pivot Handle	1
9	32153-2	Locknut 3/8"	5
10	95-9106	Bushing - Pivot	1
11	95-9073	Spring Angle (Painted)	1
12	32128-43	Locknut 3/8"	2
13	323-7	HHCS 3/8" x 1 1/4"	1
14	95-9108	Bushing - Latch	1
15	95-9107	Latch Ass'y	1
16	92-0417	Spring	1
17	*95-9246 **95-9247	Hose 1" x 44" Hose 1" x 64"	1 1
18	021146	Clamp Hose 1"	3
19	041730	Hose Barb 3/4" MPT x 1" HB	3
20	95-9232	Lever Handle	1
21	3234-5	HHCS Whizlok 5/16" x 3/4"	5
22	32128-20	Whizlok Nut 5/16"	19
23	95-9230	Valve Ratchet 3/4"	1
24	322-12	HHCS 5/16" x 2 1/2"	4
25	95-9220	Plate - Valve (top)	1
26	301950	U-Bolt (Sq)	3
27	95-9285	Hose - 1" x 36"	1
28	95-9277	Valve Plate Ass'y	1
29	95-9325	Pull- Rope - 25'	1
30	95-9326	R-Clamp	2
31	95-9286	Ring Guide	2
32	95-9327	Handle - Pull Rope	1
33	094012	Terminal	1
34	95-9097	Pulley - Engine	1
35	92-0049	Sq. Key 3/16" x 1 1/4"	1
36	322-3	HHCS 5/16" x 3/4"	1
37	3253-4	Lockwasher 5/16"	1
38	3256-3	Washer 5/16"	5
39	95-9114	Guide - Belt	1
40	95-9094	Muffler Deflector	1

Ref	Part No.	Description	Qty
41	93-0881	Hose - 1" x 24"	1
42	041327	Clamp - Hose 1 1/4"	4
43	92-0220	Pump - Diaphragm	1
44	92-0230	Control Unit	1
45	041314	Close Nipple - 1/2"	1
46	92-8552	Coupling - 1/2"	2
47	95-9143	Hose - 1/2" x 55"	1
48	096609	Clamp - Hose 1/2"	3
49	94-7101	Tee- 1/2" HB x 1/2" HB x 1/2" MPT	1
50	95-9284	Hose - 1/2" x 21"	1
51	92-0339	Ball Valve - 1/2" Steel	1
52	92-8541	Red Nipple - 1/2" x 3/4"	1
53	042941	Tee - 3/4"	1
54	041969	Red Bushing - 1/2" x 3/4"	1
55	95-9229	Relief Valve	1
56	092538	Hose Barb - 1/2" MPT x 1/2" HB	1
57	95-9142	Hose - Suction 36"	1
58	93-0851	Hose Barb - 1 1/4" x 1 1/4" HB	1
59	93-0855	Ball Valve - 1 1/4"	1
60	92-0050	Close Nipple - 1 1/4"	1
61	042701	Suction Strainer - 20 Mesh	1
62	92-0054	Clamp - Hose 3"	1
63	042057	Elbow - 1 1/4" MPT x 1" HB	1
64	094851	St. Elbow 3/8" NPT - Hyd.	1
65	289-45	Nipple - Black 3/8" NPT - Hyd	1
66	095023	Elbow 3/8" NPT - Hyd	1
67	281-2	Pipe Plug 3/8" - 18 NPT	1
68	3234-17	HHCS 5/16" x 1" Whiz	2
69	95-9245	Guide - Belt	1
70	92-0233	Strainer Bracket Ass'y	1
71	3218-2	Jam Nut 5/16" UNC	1
72	95-9103	Eye Bolt	1
73	041721	Spring Pump	1
74	32153-3	Locknut - 5/16"	4
75	356303	Washer	4
76	322-9	HHCS 5/16" x 1 3/4"	4
77	356308	Washer	4
78	323-6	HHCS 3/8" x 1"	4
79	95-9058	Eng/Pump Base Welded	1
80	95-9113	Plate - Lever	1
81	95-9109	Mounting Bracket Ass'y	1

* For use with Skid only

** For use with Trailer only

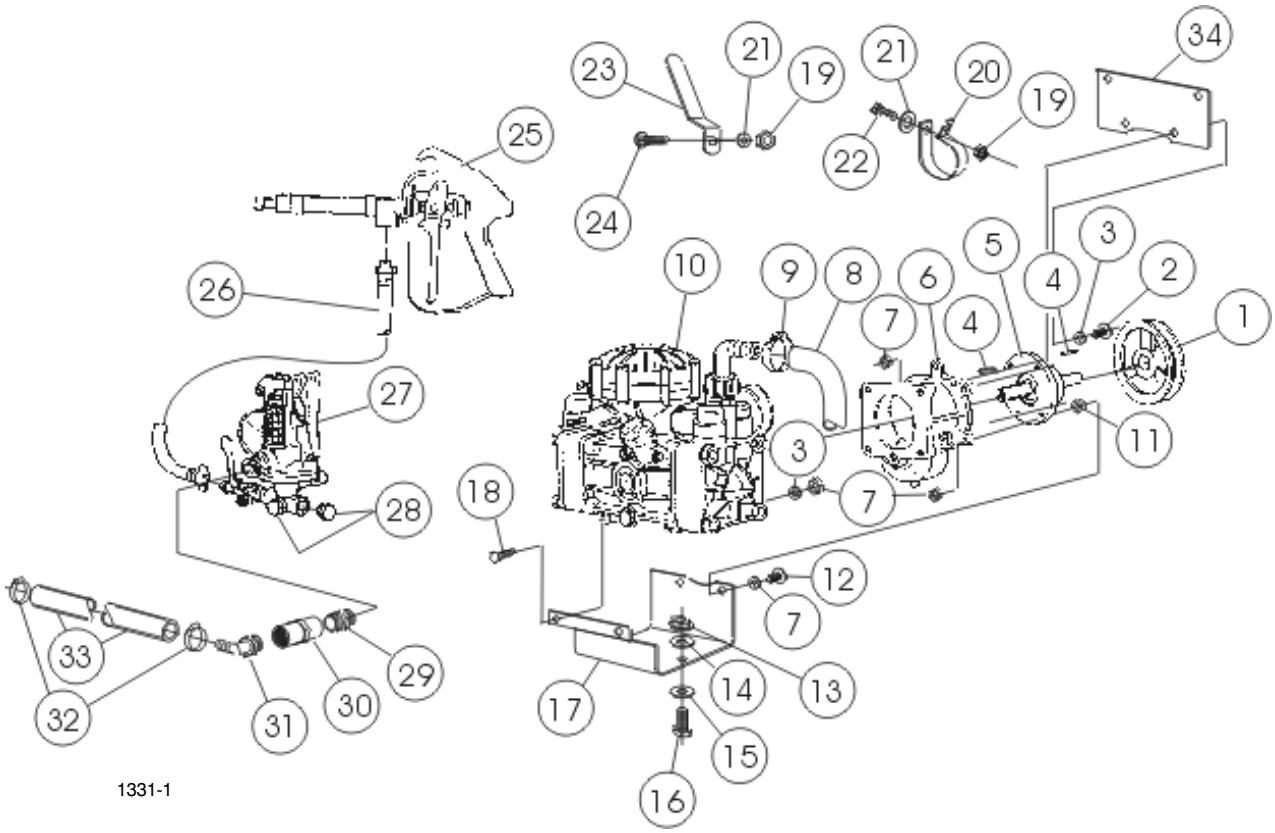

DIAPHRAGM PUMP SYSTEM

Ref	Part No.	Description	Qty
1	041390	Pump Pulley	1
2	322-7	HHCS, 5/16” x 1 1/2”	2
3	3253-4	Lock Washer, 5/16”	6
4	92-0049	Key- Square	2
5	93-6463	Flange Extension Ass’y	1
**6	92-0222	Gear Reduction Kit	1
7	3217-6	Hex Nut 5/16” NC	6
8	93-0881	Hose - 1” x 24”	1
9	21146	Hose Clamp	2
10	92-0220	High Pressure Pump	1
11	95-9112	Spacer - Mounting	2
12	322-9	HHCS 5/16” x 1 3/4”	2
13	32153-2	Locknut 3/8”	4
14	3256-4	Washer 3/8”	4
15	356308	Washer	4
16	323-6	HHCS, 3/8” x 1”	4
17	95-9109	Mounting Bracket Ass’y	1

Ref	Part No.	Description	Qty
18	322-14	Hex HD Cap Scr 5/16” x 3”	2
19	3217-6	Hex Nut 5/16”	4
20	2412-74	R-Clamp	2
21	3256-3	Flat Washer 5/16”	4
22	322-3	HHCS 5/16” x 3/4”	4
23	040153	Hose Hook	2
24	3230-1	Carriage Bolt 5/16” x 3/4”	2
25	92-0337	Spray Gun	1
26	92-0353	Hose Ass’y 25’ High Pressure	1
*27	92-0230	Control Unit	1
28	92-0314	Plug British Std. Pipe	2
29	041314	Close Nipple - 1/2”	1
30	92-8552	Coupling - 1/2”	1
31	042046	90 Elbow - 1/2” MPT x 1/2” Hb	1
32	096609	Hose Clamp 1/2”	2
33	95-9143	Hose - 1/2” x 55”	1
34	95-9113	Plate - Lever	1

* See Breakdown on page 26 for individual Control Unit Parts.

** See Breakdown on page 27 for individual Gear Reduction Parts.

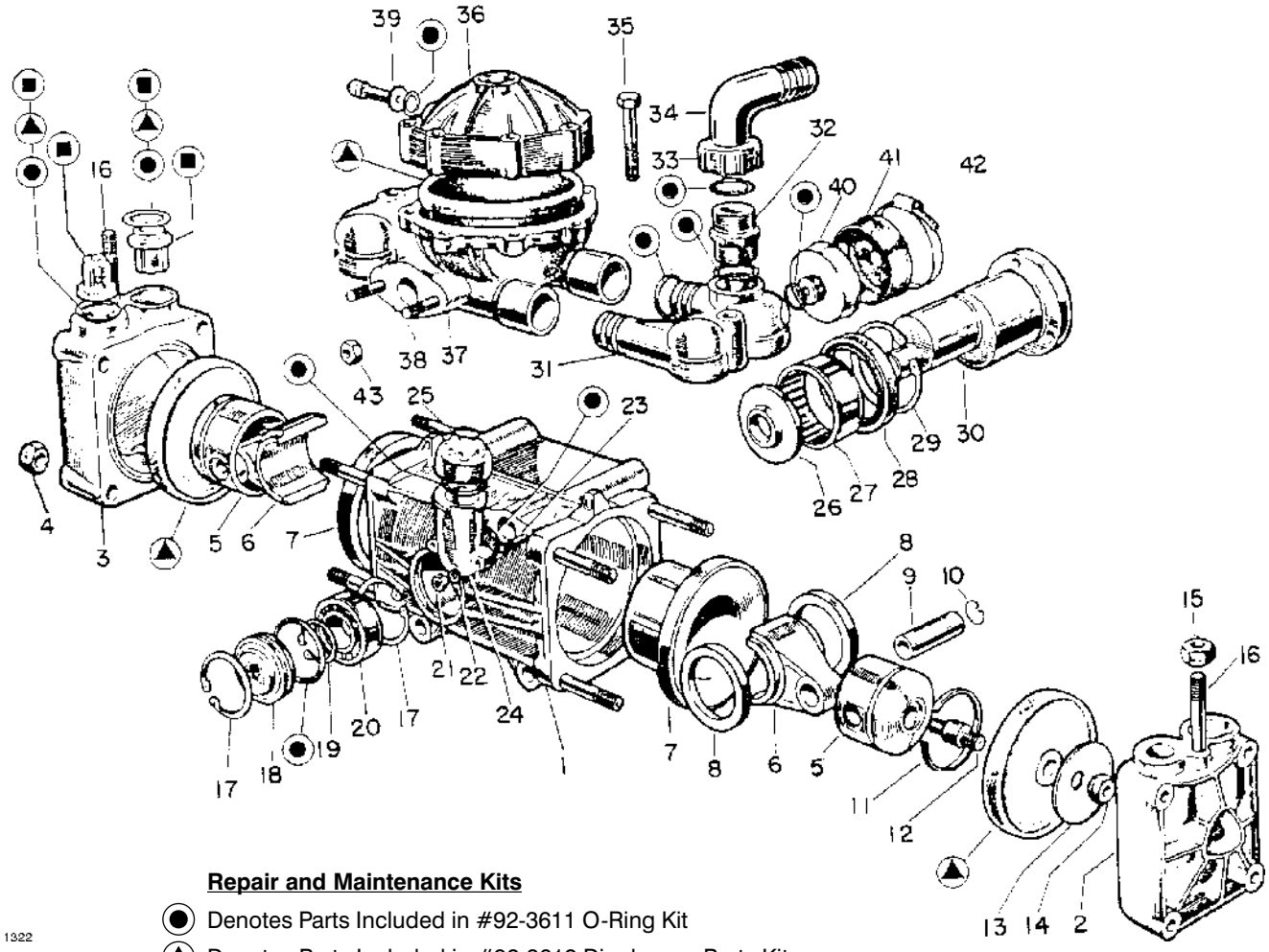

1322

Repair and Maintenance Kits

- ● Denotes Parts Included in #92-3611 O-Ring Kit
- ▲ Denotes Parts Included in #92-3612 Diaphragm Parts Kit
- ■ Denotes Parts Included in #92-3613 Valve Parts Kit

DIAPHRAGM PUMP (92-0220)

Ref	Part #	Description	Qty
1	92-3531	Pump Body	1
2	92-3532	Head Assy (Right Hand)	1
3	92-3533	Head Assy (Left Hand)	1
4	92-3534	Nut (12 MA)	8
5	92-3535	Piston	2
6	92-3536	Connecting Rod	1
7	92-3537	Piston Sleeve	2
8	92-3538	Retainer Ring	2
9	92-3539	Connecting Rod Pin	2
10	92-3540	Retaining Ring	4
11	92-3541	Piston Ring	2
12	92-3542	Retaining Belt	2
13	92-3543	Retaining Washer	2
14	92-3544	Lock Nut	2
15	92-3545	Nut (10 MA)	2
16	92-3546	Stud	2
17	92-3547	Retainer Ring	1
18	92-3548	Oil Sealing Cap	1
19	92-3549	Retaining Ring	1
20	92-3550	Ball Bearing	2
21	92-3551	Nut	2

Ref	Part #	Description	Qty
22	92-3552	Washer	2
23	92-3553	Stud	1
24	92-3554	Oil Sight Glass	1
25	92-3555	Cap for Oil Sight Glass	1
26	92-3556	Spacer Washer	1
27	92-3557	Roller Bearing	1
28	92-3558	Seal	1
29	92-3559	Retainer Ring	1
30	92-3560	Crankshaft	1
31	92-3561	Manifold	1
32	92-3562	Threaded Adapter	1
33	92-3563	Barb Nut	1
34	92-3564	Hose Barb	1
35	92-3565	Bolt (8 MA x 40)	8
36	92-3566	Accumulator Head	1
37	92-3567	Accumulator Manifold	1
38	92-3568	Stud	2
39	92-3569	Air Valve	1
40	92-3570	Damper Body	1
41	92-3571	Damper Diaphragm	1
42	92-3572	Clamp	1
43	92-3573	Nut	2

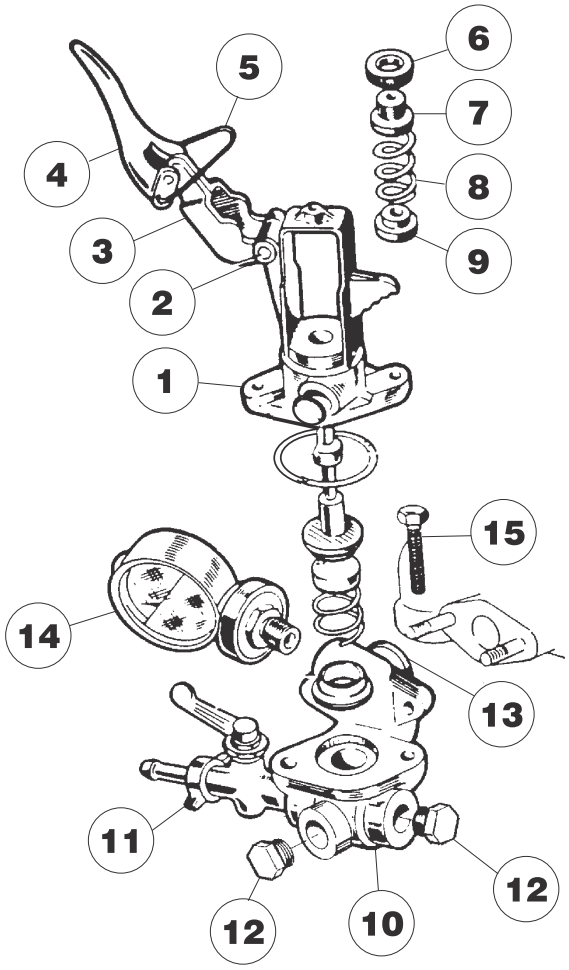

1323-1

PUMP CONTROL UNIT (92-0230)

Ref	Part No.	Description	Qty
1	92-3578	Tension Spring Housing	1
2	92-3579	Pin	2
3	92-3580	Lever Guide	1
4	92-3581	Relief Valve Lever	1
5	92-3582	Locking Clip	1
6	92-3583	Pressure Adjustment Nut	1
7	92-3584	Threaded Guide	1
8	92-3585	Tension Spring	1
9	92-3586	Tension Spring Retainer	1

Ref	Part No.	Description	Qty
10	92-3587	Relief Valve Body	1
11	92-0339	Ball Valve	1
12	92-0314	Plug	2
13	92-3590	O-Ring	1
14	95-9336	Pressure Guage (Oil Filled)	1
15	92-3597	Hex Hd Bolt (8 MA x 25)	1

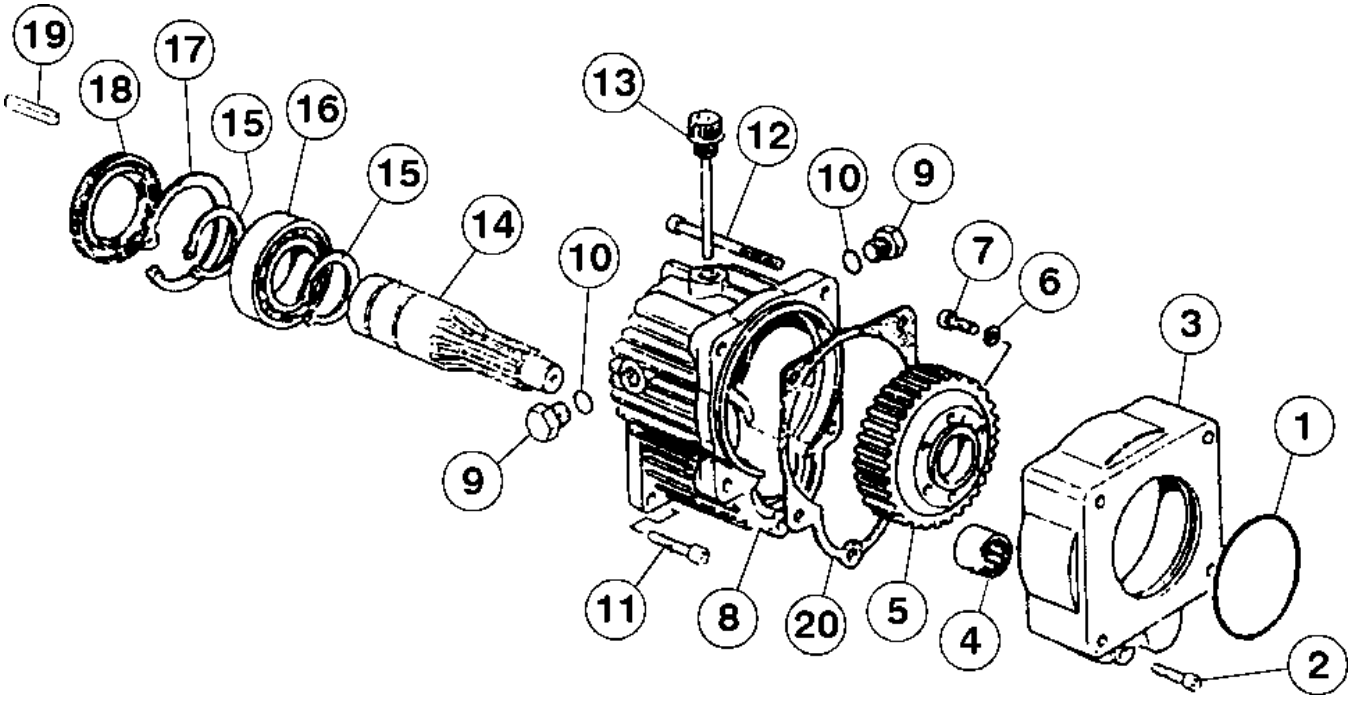

1324

GEAR REDUCTION KIT (92-0222)

Ref	Part No.	Description	Qty
1	92-3605	O-Ring	1
2	93-6470	Socket Hd Cap Scr M8 x 20 L	2
3	93-6471	Pump Adapter Flange	3
4	93-6472	Bearing	1
5	93-6473	Gear	1
6	23-12-GD	Lock Washer	3
7	93-6474	Socket Hd Cap Scr M10 x 20 L	3
8	93-6475	Gearbox	1
9	93-6476	Plug	3
10	93-6477	O-Ring	3

Ref	Part No.	Description	Qty
11	20-26-AGD	HHCS 5/16” NC x 1”	4
12	93-6478	Socket Hd Cap Scr M10 x 75 L	4
13	93-6479	Vent Plug	1
14	93-6480	Pinion Gear	1
15	93-6481	Snap Ring	2
16	93-6482	Bearing	1
17	93-6483	Snap Ring	1
18	93-6484	Seal	1
19	92-3608	Key	1
20	93-6485	Gasket	1

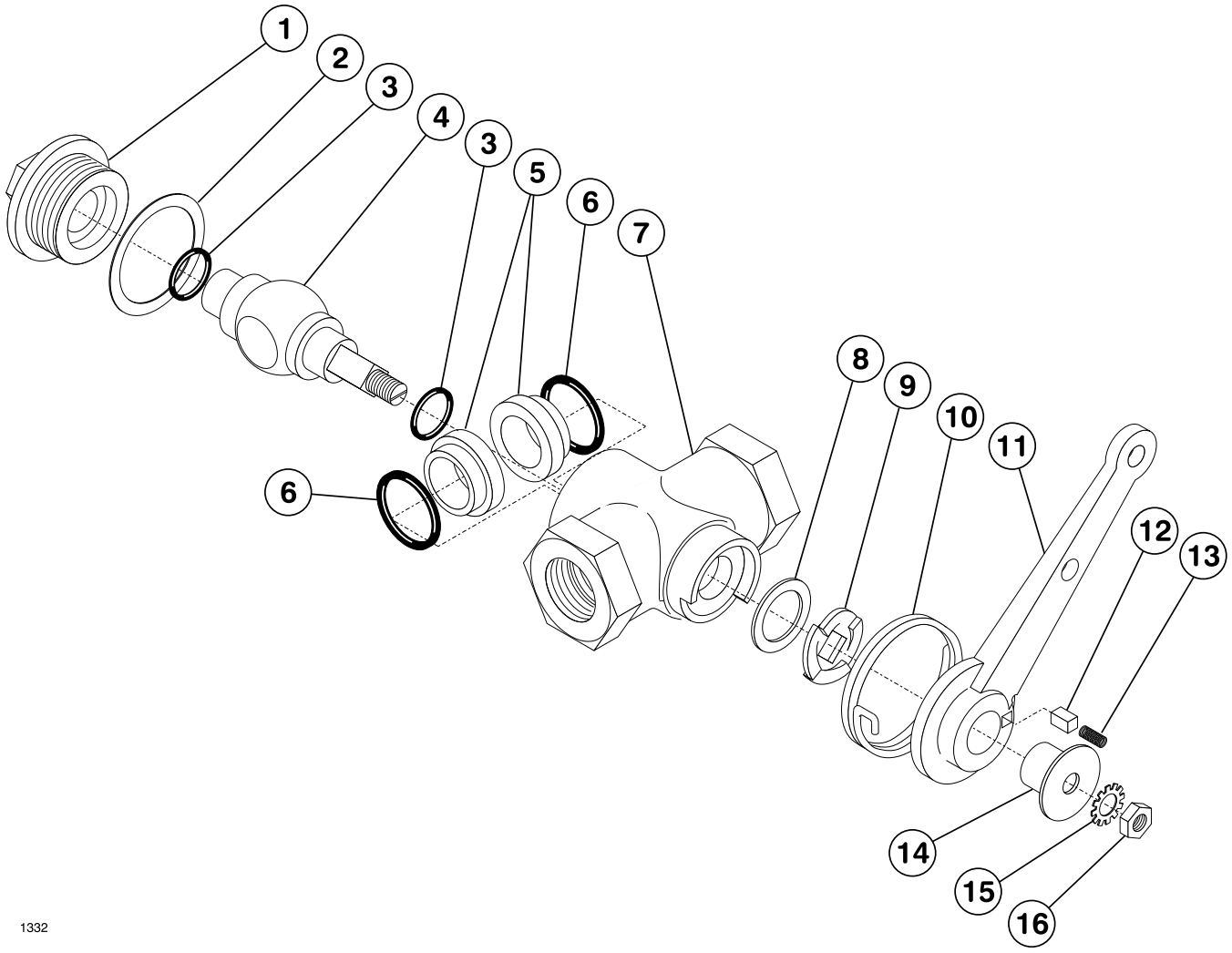

RATCHET VLAVE (95-9230)

Ref	Part No.	Description	Qty
1	99-0500	Cap	1
2	99-0506	Gasket	1
3	99-0504	O-Ring (Vinton)	2
4	99-0499	Ball Stem	1
5	99-0503	Seal	2
6	99-0505	O-Ring (Vinton)	2
7	99-0498	Body	1
8	99-0508	Washer	1

Ref	Part No.	Description	Qty
9	99-0509	Ratchet Wheel	1
10	99-0507	Torsion Spring	1
11	99-0501	Lever	1
12	99-0512	Pawl	1
13	99-0513	Pawl Spring	1
14	99-0518	Lever Bearing	1
15	99-0511	Shakeproof Washer	1
16	99-0502	Lock Nut	1