FORM NO. 95-9299

TORO®

Model No. 41080-90001 & UP
Model No. 41021-90001 & UP
Model No. 41031-90001 & UP
Model No. 41220-90001 & UP
Model No. 41223-90001 & UP
Model No. 41230-90001 & UP

SET-UP AND PARTS LIST

PRO CONTROL SPRAY SYSTEM
for the WORKMAN® Vehicle

Refer to the illustrated Parts List for details of parts used in assembling the Pro-Control ™ System.

NOTE: "Right", "Left", "Front" and "Rear" are referenced while seated in the operator's position.

1. Install the TORO APU Electric Clutch Kit as per the instructions provided with that kit.

SPEED SENSOR INSTALLATION:

Remove four bolts and discard the Aluminum Cover located on top of Transaxle. Apply a thin bead of RTV sealer around the outer bottom edge (side opposite tapped hole) of the the new Sensor Cover. Position the Sensor Cover on the Transaxle as shown in FIG. 1 and secure with bolts earlier removed. Apply a few drops of oil to the Speed Sensor and insert into Sensor Cover. Secure with the M6-12 screw and M6 lockwasher provided.

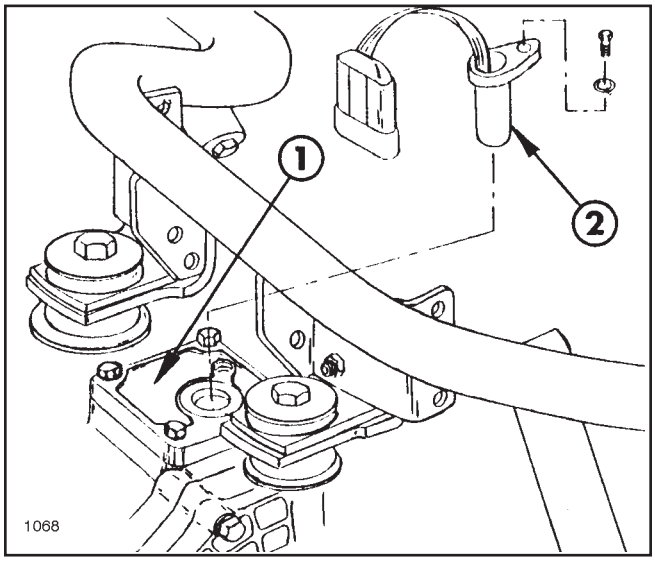

FIG. 1

1. Sensor Cover Assy. 2. Speed Sensor

PUMP INSTALLATION:

1. Slide Pulley Spacer onto the pump shaft and install Square Key into pump shaft keyway. Place the Pump Pulley on the pump shaft and secure with a 5/16" x 3/4" hex hd. cap screw, 5/16" I.D. 10 GA. flat washer, and lockwasher. See FIG. 2.

2. Attach the Idler Pivot Bracket to the Pump by removing the two pump housing bolts and replace with the (2) 3/8"x 1" hex hd. cap screws (FIG. 2).

3. Install one flange bushing into each end of the Idler Pivot assembly tube and attach to the Idler Bracket using the 3/8" x 3" hex hd. cap screw and locknut (FIG. 2).

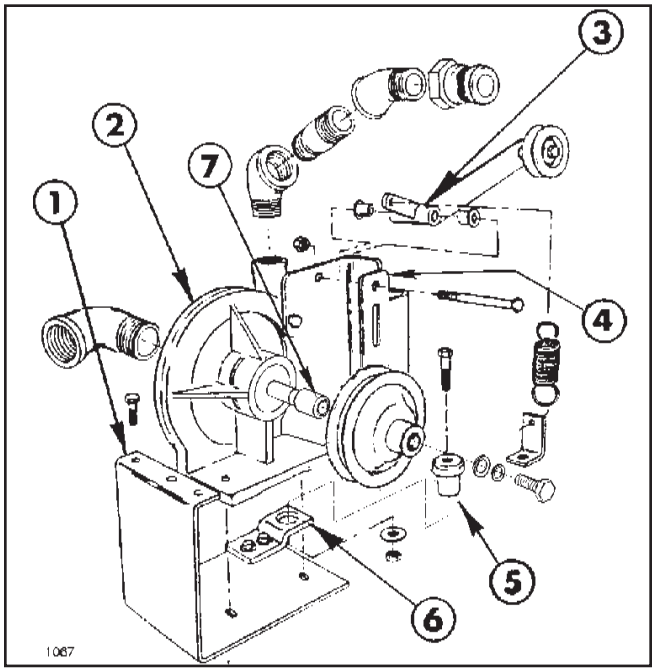

FIG. 2

1. Pump Mounting Brkt.
2. Centrifugal Pump
3. Idler Pivot Assy
4. Idler Pivot Brkt.
5. Rubber Mount
6. Tab Mount
7. Pulley Spacer

4. Mount the small Inside Idler Pulley on the long arm of the Idler Pivot Assy. using the 3/8" x 2-3/4" hex hd. cap screw, 7/8" spacer, and locknut. **Shim as required between Idler Pivot Assy and Inside Idler Pulley with the (3) 3/8" flat washers to align with Pump Pulley.** Attach the Tension Spring to the short arm of the Idler Pivot Assy. See FIG. 2.

NOTE: In the following instructions, sealer refers to Teflon Tape when used for pipe fittings.

5. Apply sealer and install the 90° x 1-1/4" street elbow into the suction port of the Pump. Apply sealer and install 1"x 3" nipple, (2) 45° x 1" elbows, and Quick Adapter into the discharge port of the Pump (FIG. 2).

©The TORO Company - 1999
All Rights Reserved

6. Install the Rubber Mount into the Tab Mount and loosely attach the Tab Mount to the Pump Mounting Bracket using the (2) 3/8" x 1" hex hd. cap screws, flatwashers, and locknuts (FIG. 2).

NOTE: For the installation of the Pump Mounting Plate, it is necessary to first remove the rear mounting bolt in the Hydraulic Valve. If equipped with the Auxiliary Hydraulics package, it is necessary to remove the last two mounting bolts for that valve. This will allow for the usage of the bolt holes to properly install the Pump Mounting Plate. Reuse the fasteners earlier removed.

7. Attach the Pump Mount Bracket assembly to the left side of the vehicle frame using the (3) 5/16" x 1" hex hd. cap screws, lockwashers, and hex nuts (Fig. 4). Insert the 3/8" x 1-1/2" hex hd. cap screw through the Rubber Mount and attach to the vehicle frame member using the 3/8" I.D. 10 GA. flat washer, and locknut (FIG. 2). Tighten all fasteners securely.

8. At the Hydraulic Control Valve, loosen and disconnect the fittings for two R.H. Dump Cylinder Hoses. Reroute these hoses to the underside of the Pump Suction Hose. Reconnect and tighten fittings. Secure all hoses and cables with tie straps to ensure they do not rub against pump pulleys and belts. See FIG. 3.

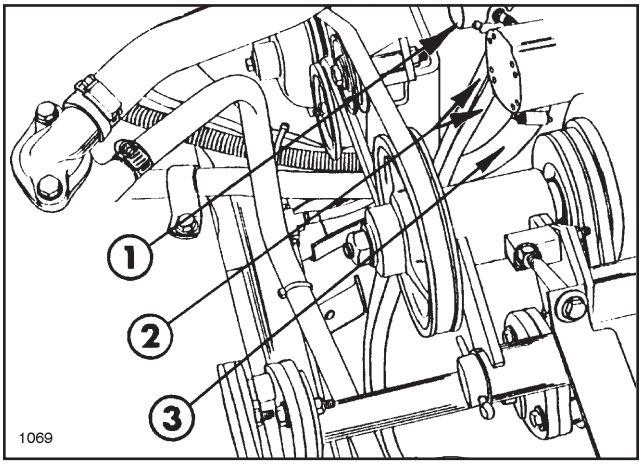

FIG. 3

1. Hydraulic Control Valve
2. R.H. Dump Cylinder Hoses
3. Pump Suction Hose

9. Mount the Pump and the Spring Tab to the Mounting Plate using the (2) 3/8" x 1-1/2" hex hd. cap screws, flat washers, and locknuts. Attach the Tension Spring to hole in Spring Tab (FIG. 2).

10. Apply thread sealer and install 1-1/4" close nipple, Suction Strainer, 90° st. elbow, reducing nipple and Quick Adapter into the suction side of the Pump (FIG. 4).

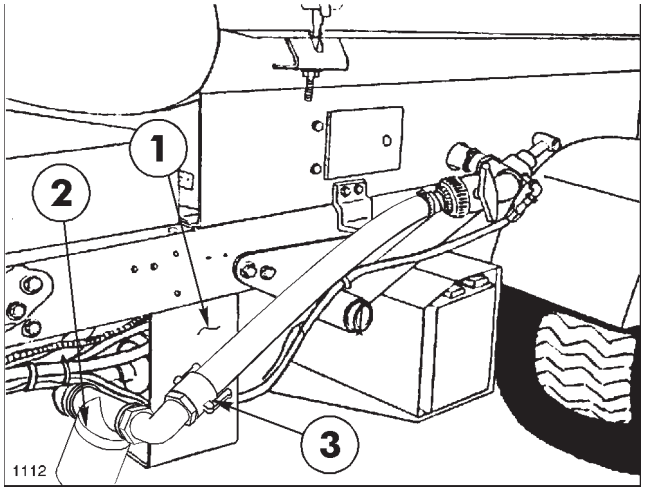

FIG. 4

1. Pump Mounting Brkt.
2. Strainer
3. Quick Adapter

11. Install the Pump Drive Belt on the pulleys as shown in FIG. 5. After installation of the Belt, loosely mount the Backside Idler Pulley in the long slot on the Idler Pivot Bracket using 3/8" x 2" carriage bolt, 3/4" spacer, hex nut, lockwasher, and (2) flat washers. With the Belt on the topside of the Idler Pulley, slide pulley up until all the slack is removed from the Belt, then tighten nut on the carriage bolt. To apply tension to the Belt, place the Inside Idler Pulley under the Belt. See FIG. 5.

NOTE: On models equipped with the diesel engine, the enclosed hose protector and nylon tie must be installed on the Lower Radiator Hose next to the Street Elbow in the suction port of the Pump. On models equipped with the liquid cooled gas engine, install the hose protector and nylon tie on the Upper Radiator Hose above the Pump Belt. This is to prevent the hose from wearing through prematurely.

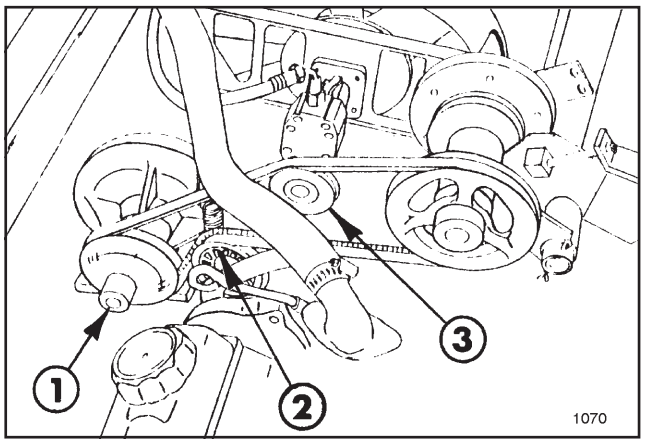

FIG. 5

1. Pump Pulley
2. Backside Idler Pulley
3. Inside Idler Pulley

CONTROL CONSOLE & HARNESS INST:

1. Unplug the wire harness connectors from both Headlights.

2. Remove (15) screws and washers securing Front Hood to vehicle frame and remove hood.

3. Temporarily mount the Console Mounting Bracket to the upper dash support using two of the earlier removed machine screws and washers (FIG. 6).

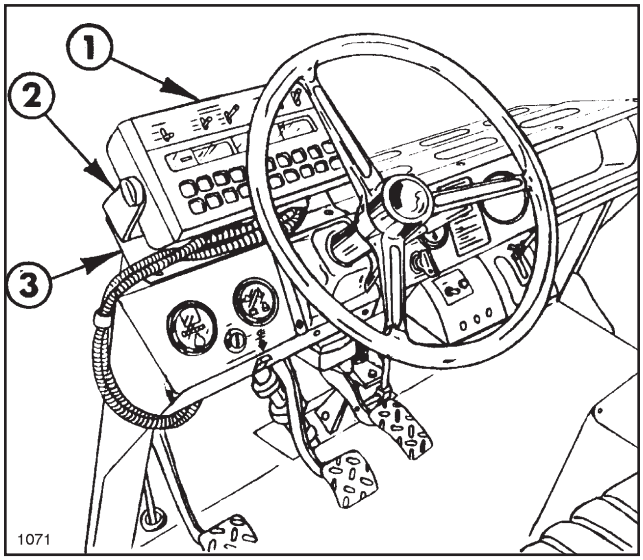

FIG. 6

1. Control Console
2. "U" Console Brkt.
3. Console Mounting Bracket

4. Using (2) 1/4" x 1" hex head cap screws, lock washers, and hex nuts, secure the "U" shaped Console Bracket to the metal Console Mounting Bracket and mount the Control Console within the "U" shaped bracket using the (2) mounting knobs (FIG. 6).

5. Connect the Console Control Cable plug to the back of the Console. Route the Control Cable under the dash and through the opening in the floorboard (FIG. 7). Loosen the bolts on the channel under the floorboard and feed the cable through the channel. Connect the Extension Cable to the Console Cable and route along the left side of the vehicle to the rear of vehicle frame.

6. Connect the Speed Sensor Cable plug to the back of the Console. Route the Speed Control Cable under the dash, through the opening in the floorboard and through the channel under the floor (FIG. 7). Route the remaining cable along the left side of the vehicle and connect to the Speed Sensor located on top of the transaxle.

7. Locate and mount the Frequency Divider using the #8 x 1-1/4" machine screw and #8 nut in the existing hole found on the underside of the top dash support frame. See FIG. 7.

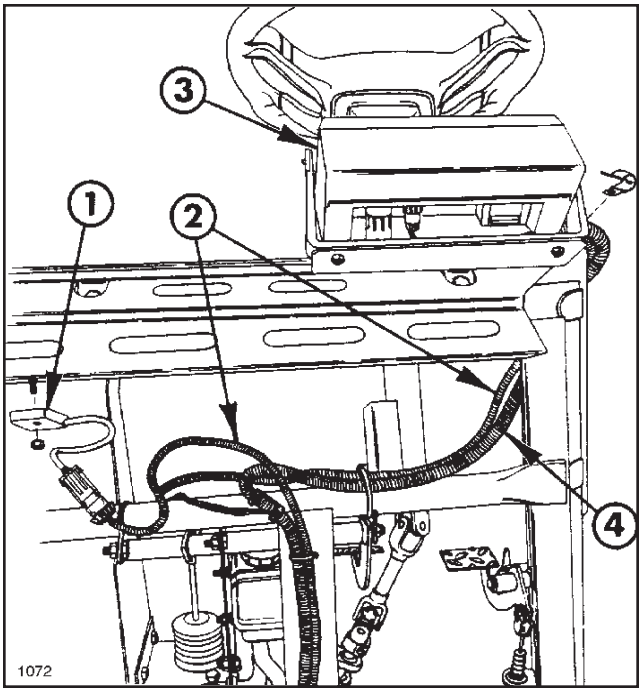

FIG. 7

1. Frequency Divider
2. Speed Sensor Cable
3. Control Console
4. Console Control Cable

8. Plug the connector from the Speed Sensor Cable into the Frequency Divider (FIG. 7).

9. Re-tighten the bolts on the channel under the floorboard.

10. Turn the "POWER ON/OFF" Switch to "OFF".

11. Route red and white battery wires of Console Control Cable to auxiliary Fuse Block. Connect the red wire to a wire from Fuse Block and ground the white wire to the ground terminal bolt.

12. Insert 20 amp Fuse into the corresponding slot of the Fuse Block and affix Decal marking fuse for the spray system.

13. Secure all wiring along vehicle frame and under dash panel with plastic cable ties furnished.

NOTE: It may be necessary to leave the hood off to mount other accessories. If so, do not complete steps 14-16 until all other accessories are installed.

14. Remove the (2) screws that hold the Console and Console Mounting Bracket to the vehicle.

15. Reinstall the hood and remount the Console Mounting Bracket using the (15) screws and washers earlier removed. Install the "R" clamp on the Console Control Cable and secure (FIG. 7).

16. Reconnect the wire harness connectors to both Headlights.

TANK INSTALLATION:

1. Remove (2) 3/8" nuts and attaching bolts that hold the left rear fender to the vehicle frame. Place a 10 GA. flat washer on each bolt. Install bolts through fender and vehicle frame and mount the Tank Support Bracket with these bolts. Reinstall the nuts and tighten securely. See FIG. 8.

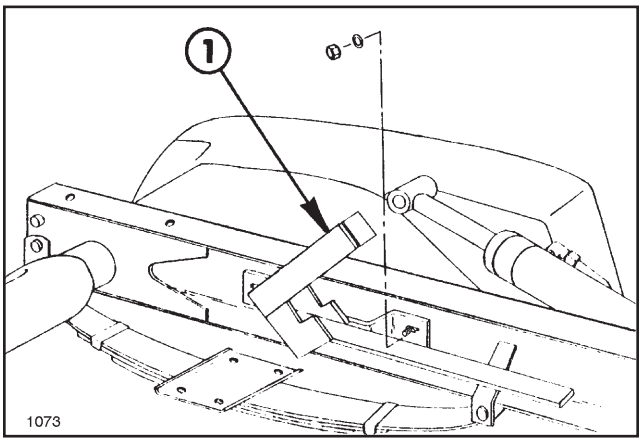

FIG. 8

1. Tank Support Brkt.

2. Cut the shipping straps and remove the Spray Tank and Skid Assembly from the shipping pallet.

3. Install the two trim pieces on the middle and right cutouts at the front of the Tank Skid.

4. Place the Tank Saddle assembly onto the vehicle frame. Secure it to the vehicle frame by sliding the (2) 3/4" dia. clevis pins through the rear mounting lugs and the vehicle frame. Install (4) lynch pins into the clevis pins. See FIG. 12.

5. Install the Anti-Siphon device as shown in the the Anti-Siphon Kit instructions provided.

6. Mount the right Hold-In Brace assembly to the (2) 5/16" carriage bolts in the front Tank Band using (2) 5/16" flatwashers and hex nuts. Tighten securely See FIG. 9.

7. Attach the right Boom Hold-In assembly to the Hold-In Brace assembly using (2) 1/4" U-bolts and (4) 1/4" lock nuts. Attach Rubber Hold-Down to Boom Hold-In assembly. See FIG. 9.

8. Repeat steps 6 and 7 for the left side of vehicle.

9. Mount Wash Tank Bracket (open end forward) to right-hand Hold-In Brace assembly using (2) 5/16" x 1" hex hd. cap screws, flat washers and hex nuts. Place Clean Water Wash Tank into Wash Tank Bracket and secure with Rubber Hold-Down as shown in FIG. 9.

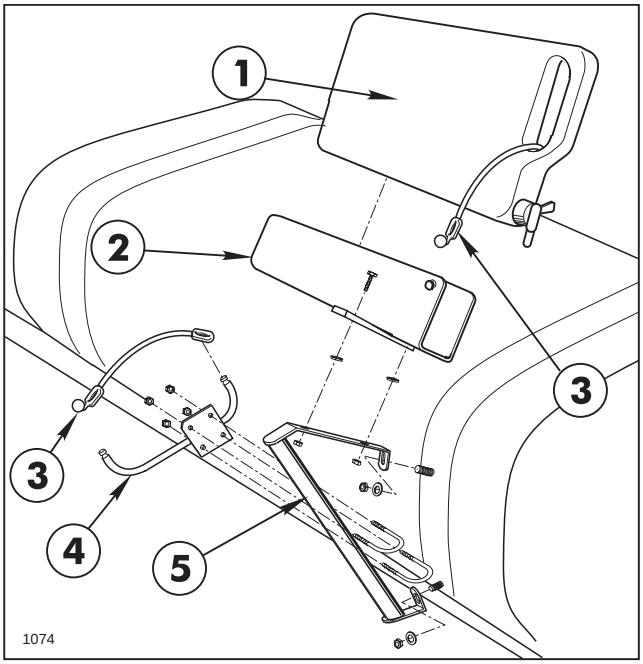

FIG. 9

1. Clean Water Wash Tank
2. Wash Tank Bracket
3. Rubber Hold-Down
4. Boom Hold-In Assy.
5. Hold-In Brace Assy.

10. Raise and support the front of the Tank Saddle assembly approximately 30 - 40 degrees to gain access to the engine compartment area.

11. Assemble (2) 3/8" long Spacers, a clevis pin, and a cotter pin to one end of the Strut Support Rod (FIG. 10).

12. Insert end of the Rod Assembly with installed spacers through Support Bracket located on the left side of the vehicle. Attach the other end to the inside of the Tank Skid at the rear bulkhead using a clevis pin and cotter pin. See FIG. 10.

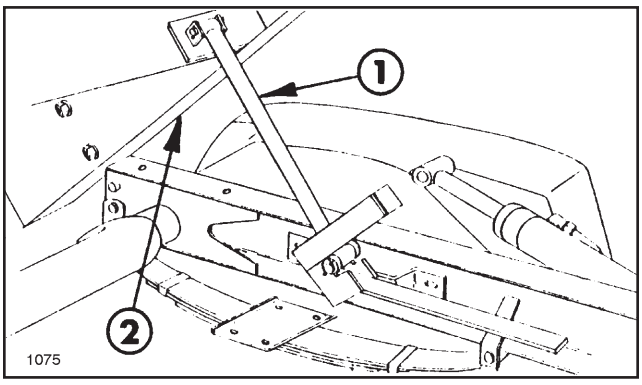

FIG. 10

1. Strut Support Rod 2. Tank Saddle Assy.

13. Locate and remove the (2) 1/2" bolts on each side of the vehicle frame and install the Attachment Mounting Bracket using the bolts earlier removed. Re-tighten the nuts and bolts securely (FIG. 11).

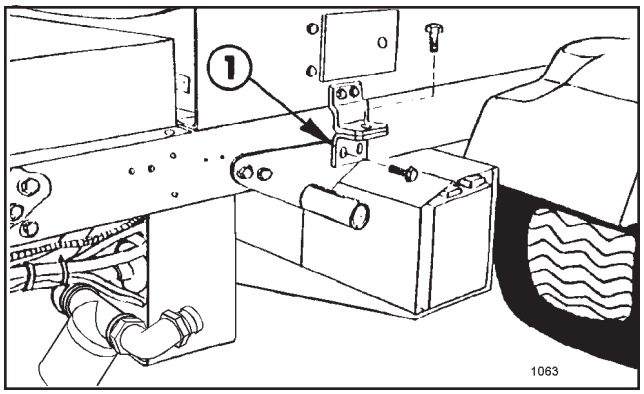

FIG. 11

1. Attachment Mounting Brkt.

14. Release the Strut Support Rod and lower the Tank Saddle assembly.

BOOM INSTALLATION:

NOTE: If installing the "Enclosed Boom" option replace the following sections with the instructions in the Enclosed Boom Set-up Manual.

- **BOOM INSTALLATION**
- **BOOM EXTENSIONS AND NOZZLES**
- **VALVES AND HOSES INSTALLATION steps 8-10**

1. Attach the two Boom Mount Upright angles onto the rear of the Tank Saddle extensions using (4) 1/2" x 1-1/4" hex hd. cap screws and locknuts (FIG. 12).

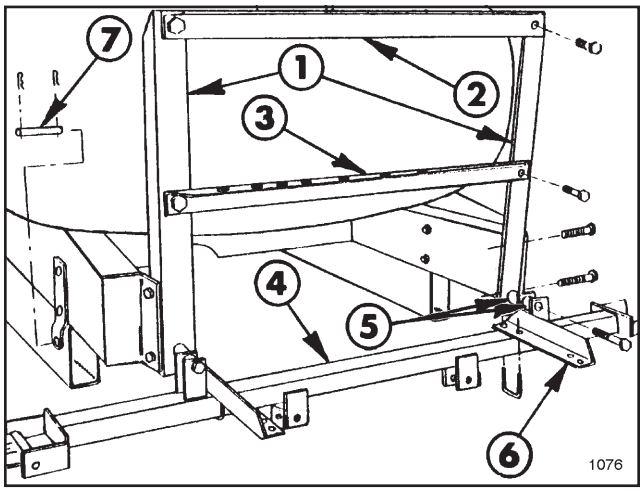

FIG. 12

1. Boom Mount Uprights
2. Upper Cross Support
3. Lower Cross Support
4. Boom Main Frame
5. Spacer Tubes
6. Center Boom Angle
7. 3/4" Clevis Pin

NOTE: Steps 2-4 apply to the assembly of the standard boom only. If the optional "Boom Pivot Kit" is to be installed, see the instructions furnished with that kit. The lower cross support to be used with that kit is different than the support used on the standard boom.

2. Position the Lower Cross Support angle and attach it to the Boom Mount Upright angles with (2) 1/2" x 1-1/4" hex hd. cap screws and locknuts See FIG. 12.

3. Position the Upper Cross Support angle and attach it to the Boom Mount Upright angles with (2) 1/2" x 1-1/4" hex hd. cap screws and locknuts.

4. Position the Spacer Tubes between the Boom Mount Upright angles and the lugs on the Boom Main Frame tube. Secure Boom Main Frame tube to the Boom Mount Uprights with (2) 1/2" x 4" hex hd. cap screws and locknuts (FIG. 13).

5. Position the two Center Boom Angles on the Main Frame Tube and secure them to the Main Frame Tube with (2) square U-bolts, (4) flat washers, and (4) hex nuts (FIG. 12).

6. Center and attach the Center Boom Pipe to the Center Boom Angles with two clamps, 3/8" x 1" hex hd. cap screw, flat washers and lock nuts. See FIG. 13.

BOOM EXTENSIONS AND NOZZLES:

1. Loosely attach the Double Barb Turret assembly in the approximate center of the Center Boom Pipe. For most uniform spray coverage, position all turret assemblies as shown in FIG. 13.

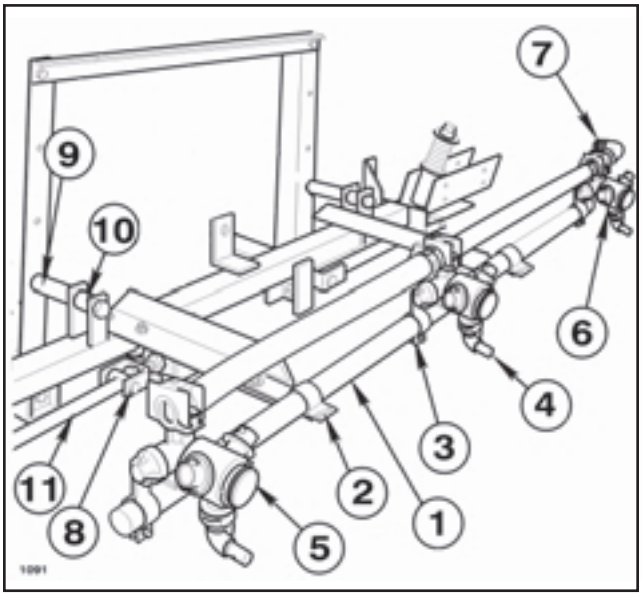

FIG. 13

1. Center Boom Pipe
2. Boom Clamp
3. Nozzle Body Clamp
4. Double Barb Turret
5. Single Barb Turret
6. Threaded Barb Turret
7. 90° Hose Barb
8. Adjustable Clevis Assy.
9. 1-1/4" Spacer Tube
10. 1" Spacer Tube
11. Strut Assembly

2. Loosely attach a Single Barb Turret assembly to LH end of the Center Boom Pipe. Loosely attach Threaded Barb Turret assembly to RH end of the Center Boom Pipe. Place a hose clamp onto each end of two 3/4" x 19" jumper hoses and connect the two "end" turret assemblies to the Double Barb Turret assembly. Level space Nozzles 20" apart and tighten all fasteners securely. Apply thread sealer and install the 3/4" 90° Hose Barb on Threaded Barb Turret assembly. See FIG. 13.

3. Attach the Strut Assemblies to the Adjustable Clevis Assemblies found on each side of the Boom Main Frame tube with (2) 1/2" x 2" clevis pins and (2) 1/8" x 1" cotter pins (FIG. 13).

IMPORTANT: Do not over tighten nuts in steps 4 & 6. The clamping action could crush the Boom Pipe.

4. Insert the plugged end of an Extension Boom Pipe into the Pivot Assembly and secure with (4) 1/4" x 1-1/4" hex hd. cap screws and locknuts. Repeat on the opposite side to assemble the other extension boom. See FIG. 14.

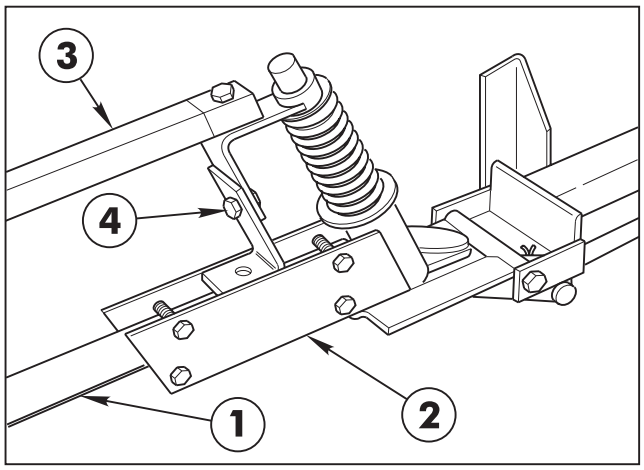

FIG. 14

1. Extension Boom Pipe
2. Pivot Assembly
3. Boom Support Assy.
4. Height Adjustment

5. Attach the LH Boom Support Assembly to the Pivot Assembly at LH end of Boom Main Frame, using a 5/16"x 1-1/2" screw and locknut (FIG. 14 & FIG. 15).

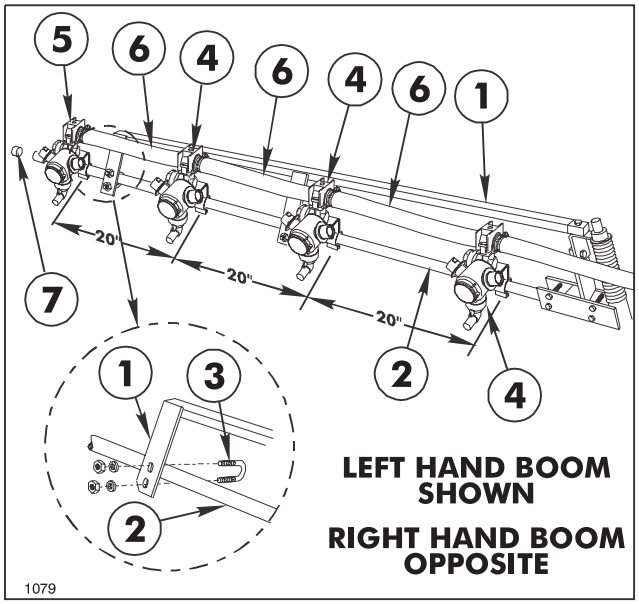

FIG. 15

1. Boom Support Assy.
2. Extension Boom Pipe
3. U-bolt
4. Double Barb Turret
5. Single Barb Turret
6. Jumper Hose, 3/4 x 19”
7. Boom Cap
8. Jumper Hose, 3/4 x 21”

6. Secure the two plates of Boom Support Assembly to the Extension Boom Pipe, using (2) 1/4" U-bolts, (4) flat washers, and (4) locknuts (FIG. 15).

7. Assemble the RH Boom Support Assembly to the other Extension Boom Pipe.

8. At the Adjustable Clevis Assemblies (See FIG. 13), adjust the booms to the level position by adjusting the jam nuts to the desired position, then tighten the end nuts against the Boom Main Frame support member.

9. Attach three Double Barb Turret assemblies and one Single Barb Turret assembly with Nozzle Body Clamps on each extension boom pipe as shown in FIG. 15.

10. Level Nozzles and space 20" apart. Connect the Turret Body assemblies with the 3/4" x 19" jumper hoses. Secure with hose clamps. See FIG. 15.

NOTE: Two Jumper Hoses provided with this kit are 21” long. They may be cut to 19” long for this set-up.

11. Install the plastic Boom Cap over the ends of the Boom Pipes.

VALVES AND HOSES INSTALLATION:

1. Apply thread sealer and install the 1" x 3/4" Reducing Nipple in the outlet port of the Motorized Control Valve and the 1" Hose Barb in the inlet port. Connect the Motorized Control Valve and the Solenoid Assembly by screwing the two together. See FIG. 16.

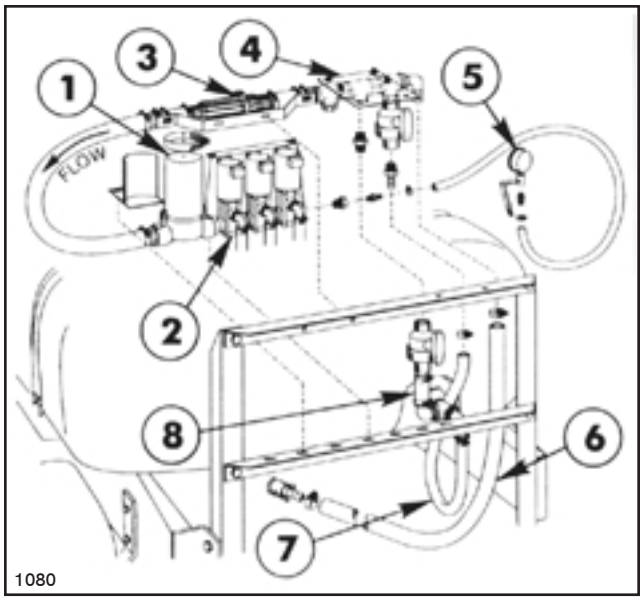

FIG. 16

1. Motorized Control Valve
2. Solenoid Assembly
3. Flow Meter
4. Tee Assembly
5. Pressure Gauge
6. Supply Hose
7. Agitator Hose
8. Connector Hose

2. Apply thread sealer and install a 3/4” 90° Hose Barb into the outlet port of the each Solenoid Valve. Install 3/4" x 1/4" Reducer Bushing and 1/4" x 3/8" Hose Barb in the end of Solenoid Assembly. See FIG. 16.

3. Loosely attach the Motorized Control Valve Bracket to the Lower Cross Support with (2) 5/16" x 3/4" hex flange hd. screws and flange lock nuts.

4. Install two (2) Grommets in 1” holes in Solenoid Mounting Bracket.

5. Slide head of M6 x 16mm hex hd. screw to the top of the mounting groove of each Solenoid Valve. Assemble Motorized Control Valve and Solenoid assembly to the Solenoid Mounting Bracket using three (3) M6 x 16mm screws just installed. Secure with three (3) M6 nuts and lockwashers.

6. Install Valve and Bracket assembly to the Lower Cross Support as shown in FIG. 16. Secure with two (2) 5/16 x 3/4 hex flange hd. screws and flange lock nuts.

7. Secure the Motorized Control Valve to the Motorized Control Valve Bracket with the large hose clamp. Tighten all fasteners securely.

8. Connect the three (3) 3/4” x 50” Boom Feeder Hoses to the 90° barbs in the Solenoid Valves and secure with hose clamps.

9. Place a hose clamp on the center boom Feeder Hose and attach it to the 90° hose barb at the RH end of the Center Boom Pipe.

10. Place a hose clamp on the right and left boom Feeder Hoses and attach them to the Double Barb Turret Bodies on the right and left Extension Boom Pipes.

11. Assemble the Pressure Gauge and the 1/4” x 3/8" 90° Hose Barb to the Gauge Bracket. Remove the protective cap and mount the bracket to the carriage bolt in the rear Tank Band, using a 5/16" flange lock nut (FIG. 16).

12. Connect the Pressure Gauge to the Solenoid assembly with the 3/8" x 36" hose. Secure the hose with hose clamps (FIG. 16).

TEE ASSEMBLY & FLOW METER:

NOTE: Direction of flow is labeled on Flow Meter.

1. Apply sealer and install the 1" x 1-1/4" Hose Barb into the LH end of the Tee Assembly and a 1" x 3/4" Hose Barb into the existing Ball Valve at the Tee Assembly (FIG. 16).

2. Remove the pipe plug in the bottom of the middle tee. Apply sealer and install a 1" Close Nipple, 1" Ball Valve, and a 1" x 1" Hose Barb (FIG. 16).

3. Mount the Tee Assembly and bracket to the Upper Cross Support with (2) 5/16" x 1" hex hd. caps screws, flatwashers, lockwashers, and nuts (FIG. 16).

4. Install a 1-1/4" x 3" Connector Hose on each end of the Flowmeter and secure with hose clamps. Install the 1-1/4" x 1" Hose Barb adapter into the Connector Hose that is on the outlet port of the Flowmeter.

5. Mount the Flowmeter Bracket to the Upper Crossmember using (2) 5/16" x 3/4" hex flange hd. screws and flange lock nuts. See FIG. 16.

6. Slide the inlet end of the Flowmeter Assembly on the 1-1/4" hose barb in the Tee Assembly. Secure with (2) hose clamps. See FIG. 16.

6. Secure the Flowmeter Assembly to the mounting bracket with the two large hose clamps.

7. Connect one end of the 1" x 30" hose to the Motorized Control Valve and connect the opposite end to the adapter in the Flowmeter Connector Hose. Secure with hose clamps. See FIG. 16.

8. Apply sealer and install the 1" 90° Hose Barb in the Rear Tank Tee (FIG. 16).

9. Install 1" Quick Coupler on the end of the 1" x 100" Supply Hose and secure with hose clamp. Connect the Supply Hose to discharge port on the Pump with Quick Coupler. Route the hose along left side of the vehicle under Tank, connect the other end of hose to the 90° Hose Barb at the RH end of the Tee Assembly and secure with a hose clamp. See FIG. 16. Secure hose at cable mounting bracket and rear cross member with tie straps.

10. Install the Protective Hose Loom on the 100" Pressure Hose as shown in FIG. 17. Secure loom to hose by tightening a tie strap around each end of loom so that loom does not shift front to rear.

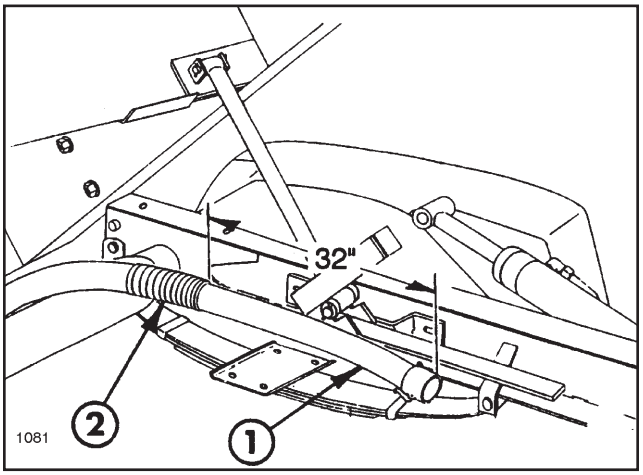

FIG. 17

1. 100" Supply Hose 2. Protective Loom

11. Connect the 3/4" x 28" Agitator Hose to the RH Ball Valve and connect the other end to the Hose Barb in the Rear tank Tee. Secure the hose with hose clamps. See FIG. 16.

12. Connect the 1" x 5" Connector Hose between the Ball Valve in the center tee and the 90° Hose Barb in the left side of the Rear Tank Tee. See FIG. 16. Secure with hose clamps.

FLOW CONTROL CABLE:

1. Locate the Extension Cable and connect it to the Fowmeter Cable. Route the cable up, along the Boom Frame Upright Angle, to make connections to the Motorized Control Valve and the Solenoid Valves. See FIG. 18.

2. Connect the rubber plug to Motorized Control Valve. Feed the other wires through the two Grommets in the Solenoid Mounting Bracket. Connect the black wire on left solenoid, brown on middle solenoid, blue on right solenoid, and a white jumper on all three solenoids (FIG. 18).

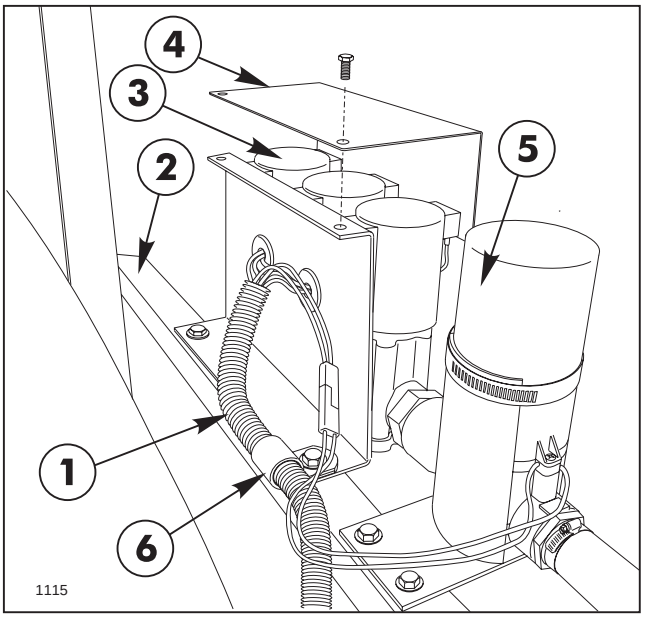

FIG. 18

1. Flow Control Cable
2. Cross Support Angle
3. Solenoid Assembly
4. Solenoid Valve Shield
5. Motorized Control Valve
6. R-clamp

3. Secure cable to the Boom Frame and the vehicle frame with R-clamp and tie straps provided (FIG. 18).

4. Install Solenoid Valve Shield to top of Solenoid Mounting Bracket and secure with (2) 1/4” x 3/8” hex flange hd. screws (FIG. 18).

RADIATOR COVER AND FINAL CHECKS:

1. Raise and support the Tank/Skid Assembly with the Strut Rod Support.

2. Mount Radiator Cover to vehicle frame using four (4) 3/8" x 1" hex hd. cap screws and flat washers. On some models, it may be necessary to use (2) nuts provided to mount cover at the rear mounting holes.

3. Release Strut Rod and lower Tank Assembly.

4. Secure the Tank Skid to the vehicle frame by installing (2) 1/2" bolts, (4) washers, and (2) locknuts through the Attachment Mounting Brackets (FIG. 11). Tighten fasteners securely.

5. Attach suction hose to suction strainer using the quick couplers.

6. Recheck and tighten all fasteners and hose clamps securely.

7. Fill the Tank with clean water and check for any leaks.

8. Refer to the Pro-Control Operator's Manual for the proper calibration and operation of the Pro-Control Spray System.

NOTES:

SAFETY INSTRUCTIONS

The following safety and instruction decals are installed on the XXXX. If any become damaged or illegible, replace them. Decals and part numbers are listed below and in the parts catalog. Order replacements from your Authorized Toro Distributor.



Part No. 75-5190: Located on Radiator Cover top, front & rear (2).



Part No. 92-2663: Located at Fuse Block (1).

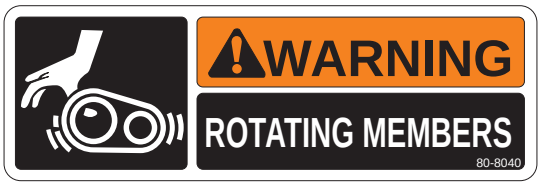

Part No. 80-8040: Located on Radiator Cover top, front & rear (2).



Part No. 87-0570: Located on rear Tank Band (2).



Part No. 36-3400: Located on Radiator Cover top sides (2).



Part No. 92-2669: Located on Tank Skid - left side @ strut (1).



Part No. 93-0688: Located on Tank Lid (1).



Part No. 62-5550: Located on Tank sides (2).

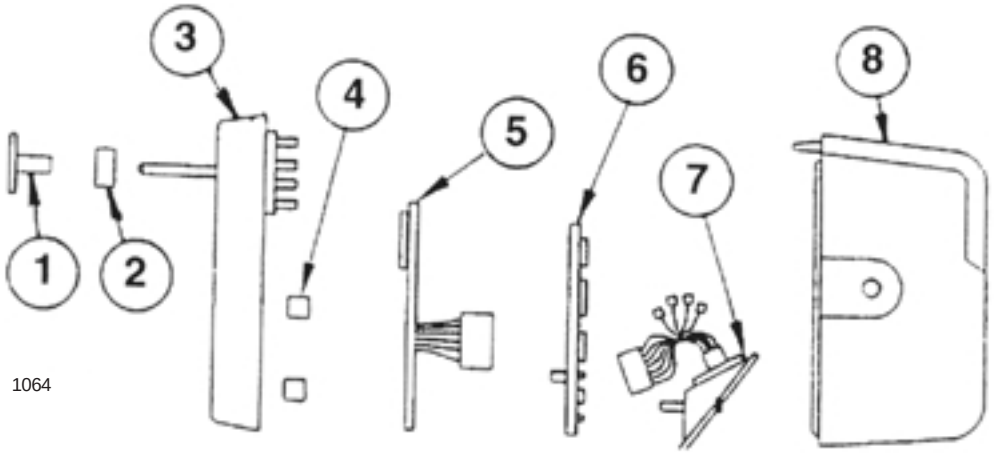

Pro Control™ Console (3000)

Ref.	Part No.	Description	Qty.
1	93-0907	Switch Cover	1
2	93-0908	1-Set Filler Spacers	1
3	93-0909	Face Plate Assy	1
4	93-0910	Display Board Spacer	1
5	93-0911	LCD Display Board	1
6	93-0912	Processor Board	1
7	93-0913	Connector Plate Assy	1
8	93-0914	Back Assy	1

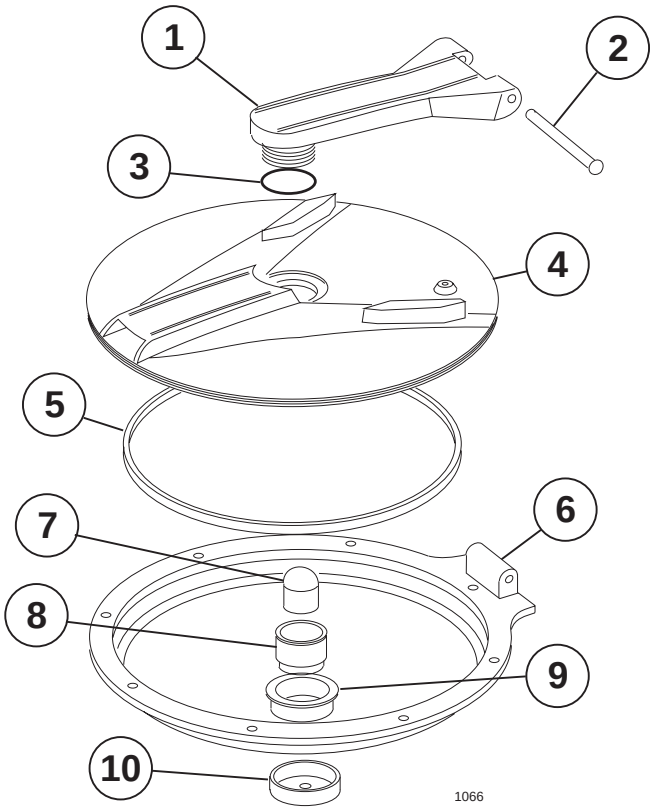

TANK LID ASSY (94-7088)

Ref.	Part No.	Description	Qty.
1	94-7205	Swivel Arm	1
2	94-7213	Pivot Pin	1
3	94-7206	O-Ring, EPDM	1
4	94-7207	Spray Tank lid	1
5	94-7208	Gasket, EPDM	1
6	94-7211	Tank Lid Ring	1
	93-0833	Aluminum Pop-Rivet	8
7	94-7209	Breather Plunger	1
8	94-7210	Breather Body	1
9	94-7212	Breather Nut	1
10	94-7214	Breather Cap	1

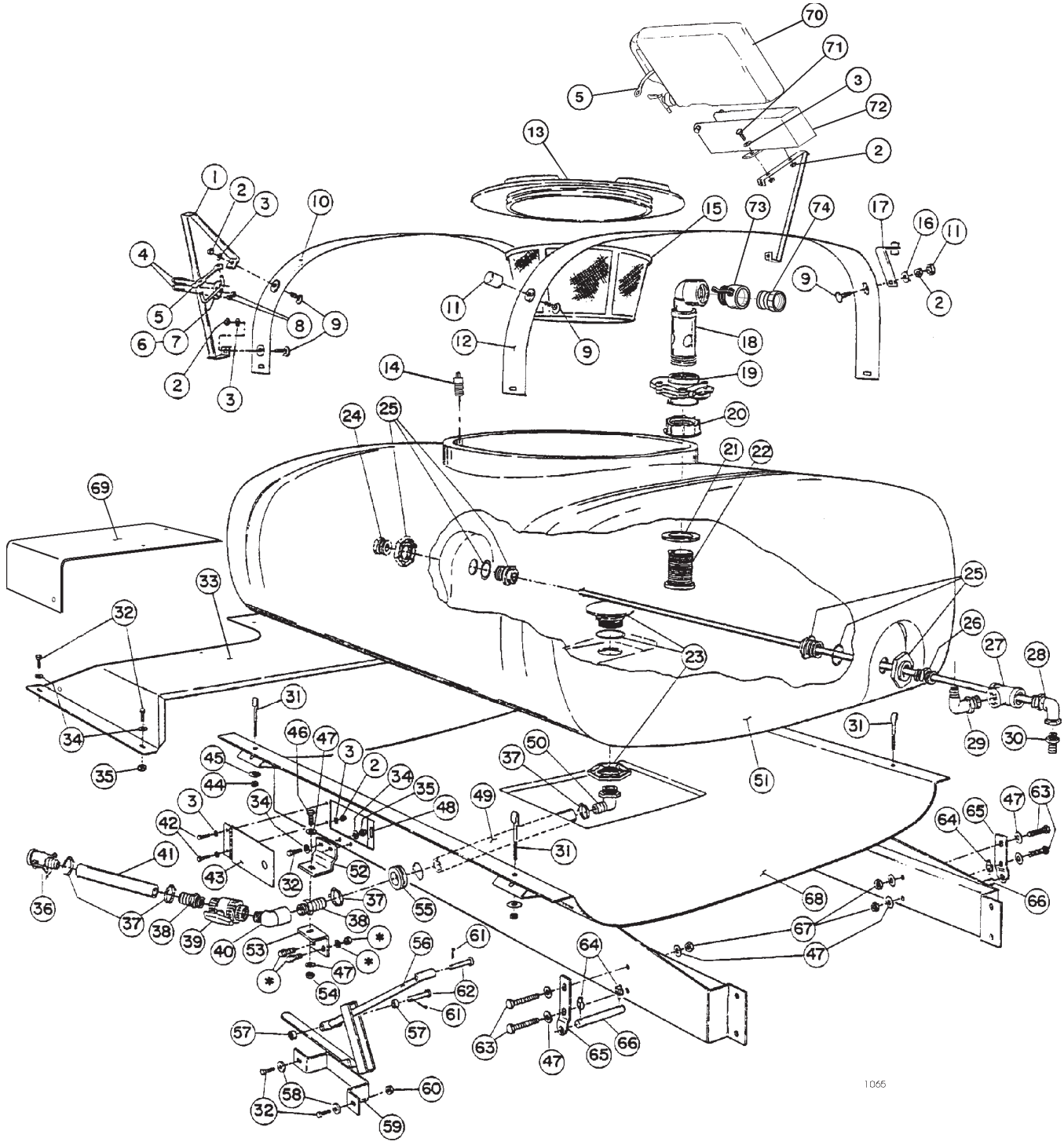

SKID & TANK (200)

* INDICATES FASTENERS INCLUDED WITH THE VEHICLE

SKID & TANK (200)

Ref.	Part No.	Description	Qty.
1	42983	Hold-In Brace Assy	2
2	3217-6	Hex Nut, 5/16	12
3	3256-23	Flatwasher, 5/16 S.A.E.	14
4	92-0010	U-Bolt, 1/4	4
5	42198	Rubber Hold-Down Strap	3
6	42259	Boom Hold-In -L.H. (shown)	1
7	42316	Boom Hold-In - R.H. (opposite)	1
8	3217-5	Hex Nut, 1/4	8
9	3230-9	Carriage Bolt, 5/16 x 3/4	6
10	92-3666	Tank Band - Front	1
11	42452	Protective Cap	2
12	3253-4	Lock Washer, 5/16	1
13	94-7088	Tank Lid, Hinged (f/w Tank Assy.)	1
14	93-1092	Drain Plug	1
15	42323	Filler Basket - 16" (f/w Tank Assy)	1
16	92-3667	Tank Band - Rear	1
17	42277	Pressure Gauge Bracket	1
18	43069	Stand-Up Assy	1
19	43067	Knife Valve	1
20	43068	Fly Nut, 2" NPT	1
21	43067	Sealing Washer	1
22	43066	Bulk Head, 2" NPT	1
23	41798	Anti-Vortex Fitting, 1-1/4 NPT (f/w Tank Assy)	1
24	41315	Hex Plug, 1" NPT	1
25	41800	Tank Fitting, 1" NPT (f/w Tank Assy)	1
26	41304	Close Nipple, 1" NPT	1
27	41305	Tee, 1" NPT	1
28	92-3630	Agitator Tube Assy	1
29	41140	90 Elbow, 1" NPT x 1"	1
30	41257	Hose Barb, 3/4 NPT x 3/4	1
31	92-3668	"J"-Bolt	4
32	323-6	HHCS, 3/8 x 1"	10
33	93-6199	Radiator Cover	1
	92-3627	Trim - 5 5/8"	1
	42657	Trim - 26"	1
34	3256-24	Flatwasher, 3/8"	12
35	3217-7	Hex Nut, 3/8	6

Ref.	Part No.	Description	Qty.
36	40480	Female Quick Coupler, 1"	1
37	21146	Hose Clamp	4
38	92-0012	Hose Barb, 1" NPT x 1"	2
39	40020	Ball Valve, 1" NPT	1
40	41307	90 St. Elbow, 1" NPT	1
41	94-8506	Suction Hose, 1" x 21"	1
42	322-3	HHCS, 5/16 x 3/4	4
43	92-0135	Door Assy	1
44	3217-8	Hex Nut, 7/16	4
45	3256-5	Flatwasher, 7/16	4
46	325-6	HHCS, 1/2 x 1 1/2"	2
47	3256-26	Flatwasher, 1/2 S.A.E.	12
48	92-3700	Door Magnet	2
49	92-3677	Suction Hose, 1" x 30"	1
50	42057	90 Elbow, 1 1/4" MPT x 1"	1
51	92-8172	Tank Assembly - 200 gal.	4
52	92-0159	Front Mtg. Bracket	1
53	92-2667	Attachment Mtg. Bracket	1
54	32153-5	Lock Nut, 1/2	2
55	40764	Grommet	1
56	92-3750	Strut Assy	1
57	92-0909	Pivot Spacer	2
58	356308	Washer, #10 ga.	2
59	92-3690	Strut Support Bracket Assy	1
60	321397	Flange Nut, 3/8	2
61	3272-11	Cotter Pin, 1/8 x 1"	2
62	42195	Clevis Pin, 1/2" x 2"	2
63	325-11	HHCS, 1/2 NC x 2 2/4"	4
64	92-1298	Lynch Pin	4
65	92-0158	Pivot Lug	1
66	92-1233	Clevis Pin, 3/4 x 4 7/16"	2
67	3217-9	Hex Nut, 1/2 NC	4
68	92-8173	Skid Assy	1
	92-3752	Cutout Trim	1
	92-3753	Cutout Trim	1
69	93-6427	Radiator Cover - Panel	1
	32144-10	Hex WS Screw, 1/4 x 5/8	3
70	92-3976	Clean Water Wash Tank	1
71	322-5	HHCS, 5/16 x 1"	2
72	92-3969	Wash Tank Bracket	1
73	92-0238	Quick Coupler	1
74	041316	Quick Adapter	1

* Not illustrated

Order replacement parts from your Authorized Toro Distributor.

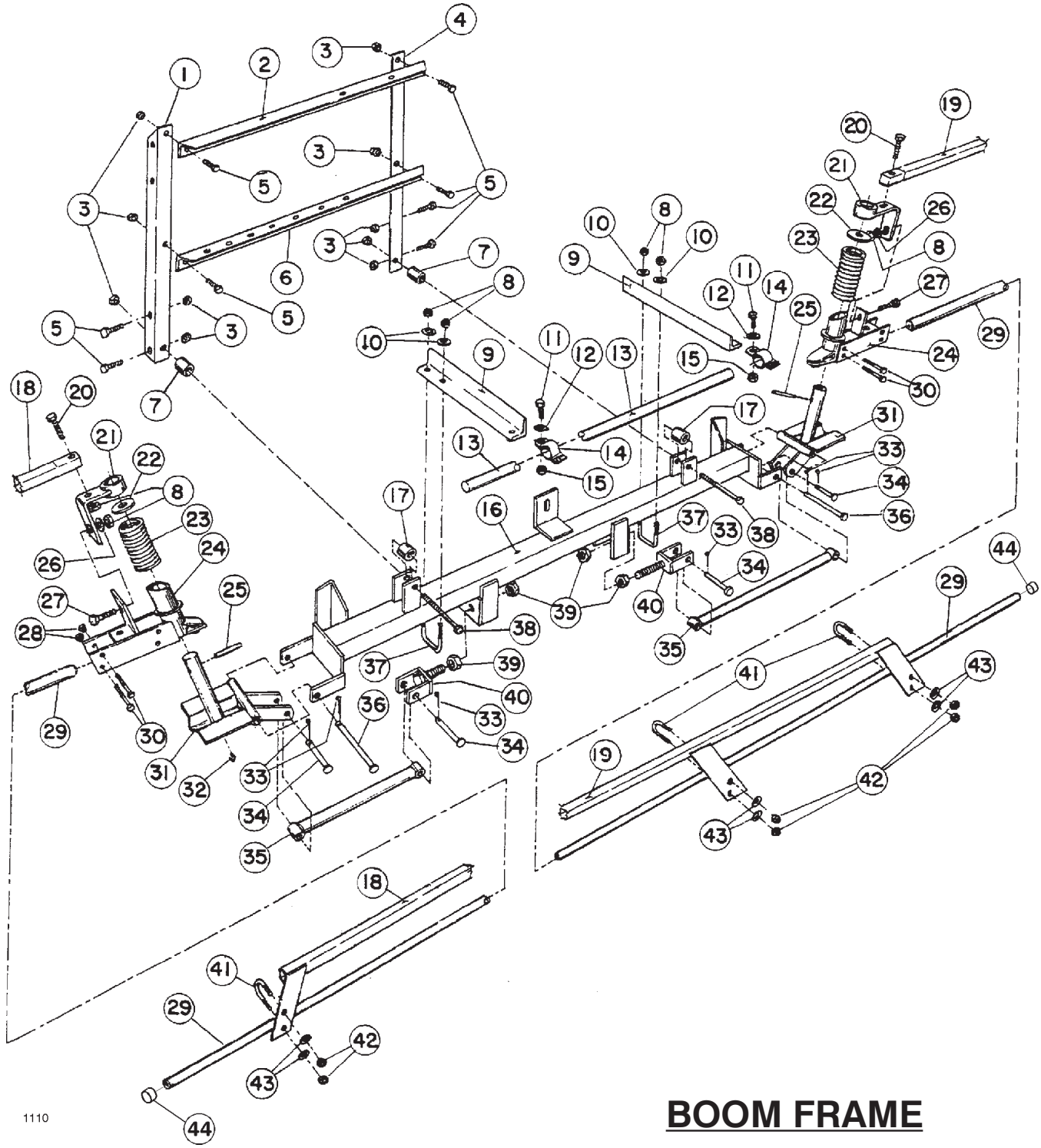

BOOM FRAME

BOOM FRAME

Ref.	Part No.	Description	Qty.
1	92-3671	Boom Mtg Angle - L.H.	1
2	92-3672	Cross Angle - Upper	1
3	32153-5	Lock Nut, 1/2	10
4	92-3670	Boom Mtg Angle - R.H.	1
5	325-5	HHCS, 1/2 x 1-1/4	8
6	42225	Cross Support Angle	1
7	42258	Spacer Tube, 1-1/4" Lg.	2
8*	3217-6	Hex Nut, 5/16	8
9	42234	Center Boom Angle	2
10	3256-3	Flatwasher, 5/16	4
11	323-6	HHCS, 3/8 x 1"	2
12	3256-4	Flatwasher, 3/8	2
13	40493	Center Boom Pipe	1
14	40494	Clamp Assy.	2
15	32153-2	Lock Nut, 3/8	2
16	42227	Main Frame Tube-W. A.	1
17	42257	Spacer Tube, 1" Lg.	2
18	42711	Boom Support Assy.-L.H.	1
19	42710	Boom Support Assy.-R.H.	1
20	322-7	HHCS, 5/16 x 1-1/2"	2
21*	42707	Support Bracket Assy.	2
22*	3256-62	Flatwasher, 1" S.A.E.	2

Ref.	Part No.	Description	Qty.
23*	42196	Compression Spring	2
24*	42706	Breakaway Pivot Assy.	2
25*	32121-78	Spring Pin, 1/4 x 2"	2
26*	3256-23	Flatwasher, 5/16 S.A.E.	2
27*	3230-1	Carriage Bolt, 5/16 x 3/4	2
28	32146-17	Lock Nut, 1/4 NC	8
29	42282	Ext. Boom Pipe Assy.	2
30	321-10	HHCS, 1/4 x 1-3/4	8
31*	42243	Hinge Assy.	2
32*	361011	Grease Fitting	2
33	3272-11	Cotter Pin, 1/8 x 1"	6
34	42195	Clevis Pin, 1/2 x 2"	4
35	42240	Strut Assy.	2
36	42194	Clevis Pin, 1/2 x 4-1/2"	2
37	301950	U-Bolt, 5/16	2
38	325-17	HHCS, 1/2 x 4"	2
39	3217-11	Hex Nut, 5/8	4
40	42237	Adjustable Clevis Assy.	2
41	92-0010	U-Bolt, 1/4	4
42	32146-17	Lock Nut, 1/4	8
43	3256-2	Flatwasher, 1/4	8
44	92-8420	Boom Cap	4

*Denotes parts that are available in an assembled unit.
Order #42840 Breakaway Assembly.

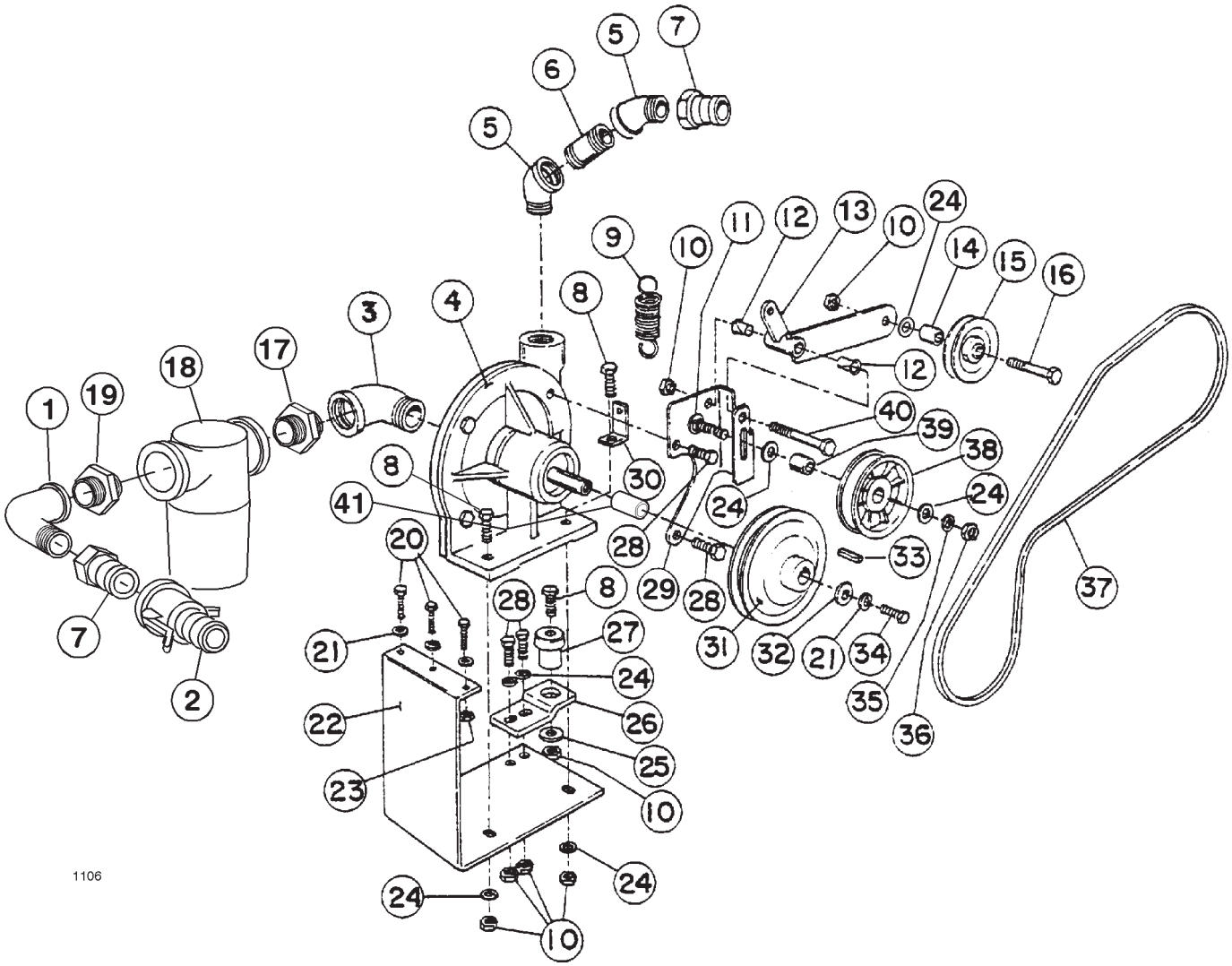

SPRAYER PUMP ASSEMBLY (3000)

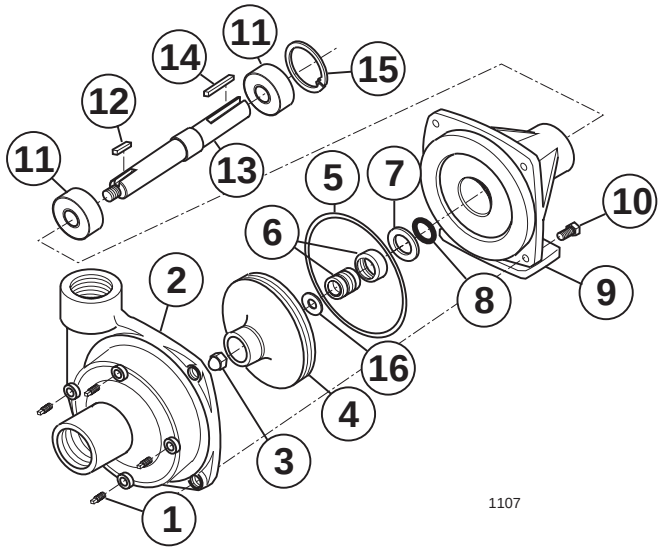

CENTRIFUGAL PUMP (93-6505)

SPRAYER PUMP ASSEMBLY (3000)

Ref.	Part No.	Description	Qty.
1	41307	1" 90° Street Elbow	1
2	40480	Quick Coupler x 1"	1
3	93-0887	90° St. Elbow, 1-1/4"	1
4	93-6505	Centrifugal Pump	1
5	5706	45° St. Elbow, 1"	2
6	92-3731	Nipple, 1" x 3"	1
7	41316	Quick Adaptor, 1"	2
	41318	Dust Cap	2
8	323-8	HHCS, 3/8 x 1-1/2"	3
9	67-1440	Tension Spring	1
10	32153-2	Lock Nut, 3/8	7
11	3231-7	Carriage Bolt, 3/8 x 2"	1
12	52-2890	Nyliner Bushing	2
13	92-3742	Idler Pivot Assy.	1
14	92-3701	Idler Spacer (Inside)	1
15	68-0030	Idler Pulley (Inside)	1
16	323-13	HHCS, 3/8 x 2-3/4"	1
17	92-0050	Close Nipple, 1-1/4"	1
18	42701	Suction Strainer	1
	93-0687	Bowl	1
	94-7065	Strainer Screen 20 mesh std (f/w 42701)	1
	42702	Strainer Screen 40 mesh (optional)	AR
	42703	Strainer Gasket (f/w 42701)	AR
19	42992	Reducing Nipple, 1-1/4" x 1"	1
20	322-5	HHCS, 5/16 x 1"	3
21	3253-4	Lock Washer	4
22	92-3725	Pump Mounting Bracket	1
23	3217-6	Hex Nut, 5/16	3
24	3256-4	Flatwasher, 3/8	7
25	356308	Special Washer	1
26	92-3726	Tab Mount	1
27	63-9750	Rubber Mount	1
28	323-6	HHCS, 3/8 x 1"	4
29	92-3740	Pump Bracket	1
30	92-3741	Spring Tab	1
31	92-2629	Pump Pulley	1
32	356303	Special Washer	1
33	92-0049	Sq. Key, 3/16 x 1-1/4"	1
34	322-3	HHCS, 5/16 x 3/4	1
35	3253-11	Lock Washer, 3/8	1
36	3217-7	Hex Nut, 3/8 NC	1
37	54-1360	Drive Belt	1
38	41353	Idler Pulley (Backside)	1
39	92-3746	Idler Spacer (Backside)	1
40	323-14	HHCS, 3/8 NC x 3"	1
41	94-8502	Pulley Spacer	1

CENTRIFUGAL PUMP (93-6505)

Ref.	Part No.	Description	Qty.
1	42084	Drain Plug	4
2	94-8503	Pump Casing	1
3	42086	Impeller Nut	1
4	94-8504	Impeller	1
5*	42089	Oring	1
6*	42088	Mechanical Seal (Viton)	1
7	93-0924	Seal Retainer	1
8	42092	Slinger Ring	1
9	93-0925	Mounting Flange	1
10	323-6	Bolt	4
11	93-0927	Ball Bearing	2
12	93-0928	Key	1
13	94-8505	Pump Shaft	1
14	93-0930	Key	1
15	42093	Bearing Retainer	1
16*	93-0931	Gasket	1

*Denotes parts included in Seal/O-Ring Repair Kit.
Order Part No. 94-8520

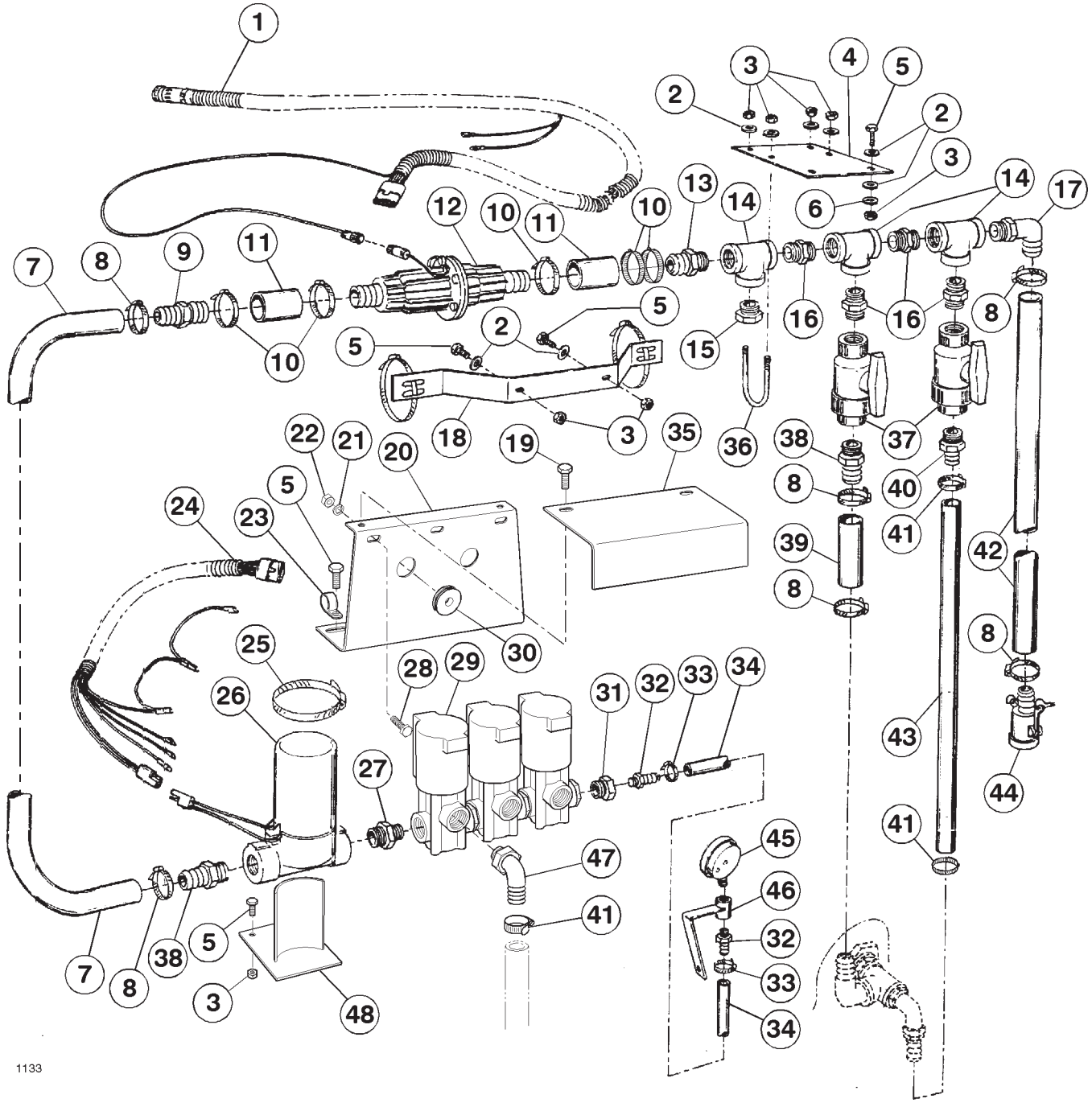
1133

PRO CONTROL SPRAY SYSTEM (3000)

Ref.	Part No.	Description	Qty.
1	92-3688	Console Ctrl. Cable (18 ft.)	1
2	3256-23	Flatwasher, 5/16	8
3	32128-20	Hex Nut, 5/16	10
4	92-3675	Manifold Mtg. Plate	1
5	3234-5	HHCS, 5/16 x 3/4"	8
6	3253-4	Lock Washer, 5/16	2
7	92-3677	Connector Hose, 1" x 30"	1
8	21146	Hose Clamp	6
9	92-3638	Adaptor, 1" HB x 1-1/4" HB	1
10	41327	Hose Clamp	5
11	41320	Adaptor Hose, 1-1/4" x 3"	2
12	41482	Flow Meter	1
13	41308	Hose Barb, 1" x 1-1/4" HB	1
14	41305	Tee, 1"	3
15	41315	Hex Plug, 1"	1
16	41304	Close Nipple, 1"	4
17	41140	90° Elbow, 1" MPT x 1" HB	1
18	41483	Flow Meter Mtg. Brkt.	1
19	3234-26	HWHCS, 1/4 x 3/8”	2
20	95-9238	Solenoid Mounting Bracket	1
21	48-8020	Lockwasher, M6	3
22	43-2830	Hex Nut, M6	3
23	41230	R-Clamp	1
24	92-3689	Flow Control Cable (3 ft.)	1
25	92-0054	Hose Clamp	1

Ref.	Part No.	Description	Qty.
26	41480	Motorized Control Valve	1
27	41309	Reducing Nipple, 1" x 3/4”	1
28	48-7620	HHCS, M6 x 16mm	3
29	95-9236	Solenoid Valve Assy. (Trpl)	1
	95-9237	Single Solenoid	AR
30	42811	Grommet	2
31	41310	Reducer Bushing, 3/4 x 1/4	1
32	21121	Hose Barb, 1/4 x 3/8 HB	2
33	96609	Hose Clamp	2
34	42276	Pressure Gauge Hose, 3/8 ID x 36"	1
35	95-9240	Solenoid Valve Shield	1
36	92-3723	U-Bolt, 5/16	2
37	40020	Ball Valve, 1"	2
38	92-0012	Hose Barb, 1" x 1" HB	2
39	92-3702	Overflow Hose, 1" x 5"	1
40	92-0236	Hose Barb, 1" x 3/4 HB	1
41	92-0045	Hose Clamp	5
42	92-3707	Supply Hose, 1" x 100"	1
43	92-3721	Agitator Hose, 3/4 x 28"	1
44	40480	Quick Coupler x 1" HB	1
45	40485	Pressure Gauge	1
46	42277	Gauge Brkt Assy	1
47	92-8557	Hose Barb, 90° 1/2 x 3/4 HB	3
48	41732	Control Valve Bracket Assy	1

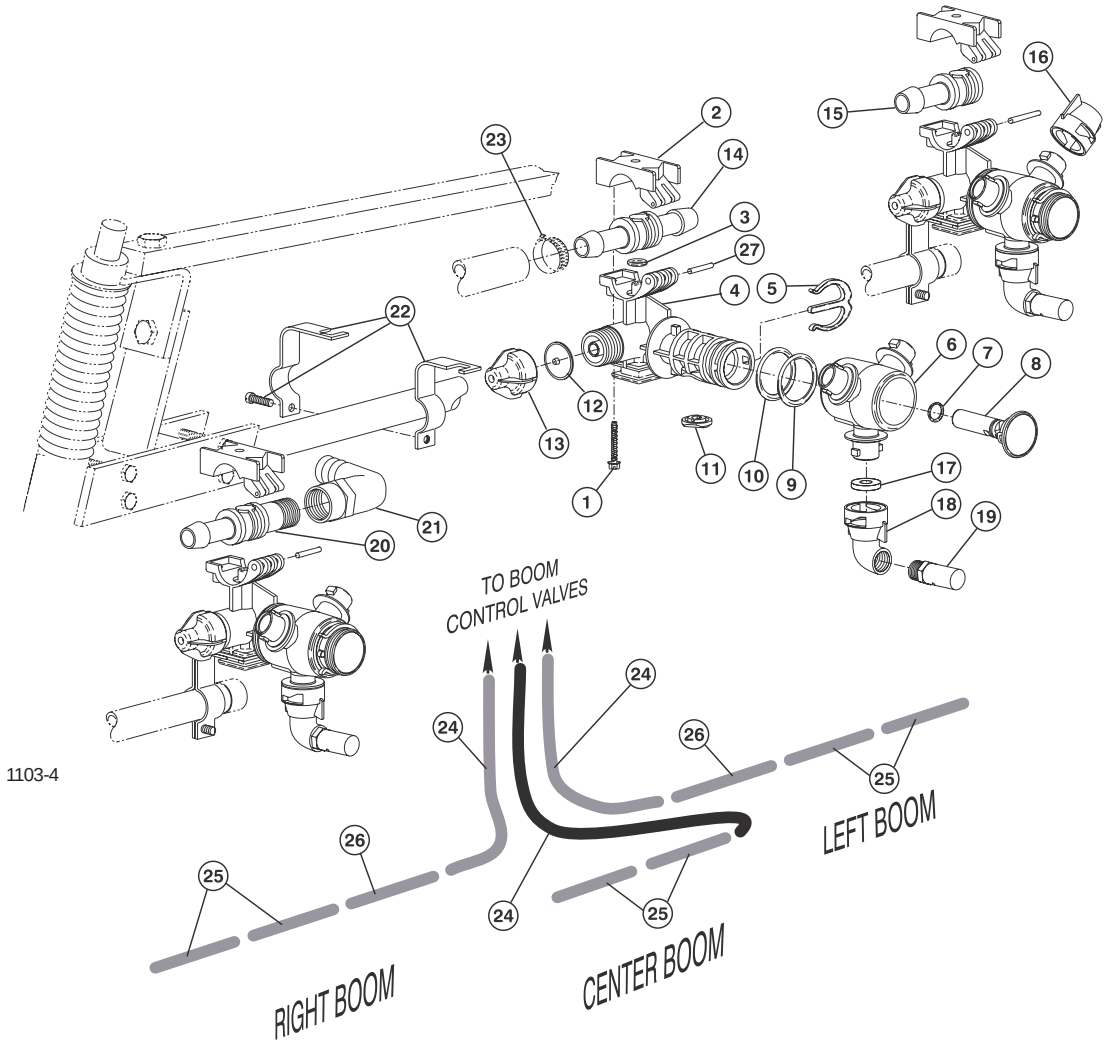

TURRET BODIES & BOOM HOSES

Ref.	Part No.	Description	Qty.
*	95-9183	Turret Body - Double Barb (Incl. Ref. #'s 1-14)	7
*	95-9181	Turret Body - Single Barb (Incl. Ref. #'s 1-13 & 15)	3
*	95-9184	Turret Body - Barb x 1/2 NPT (Incl. Ref. #'s 1-13 & 20)	1
1	99-0811	Screw	1
2	99-0812	Upper Clamp	1
†3	95-9191	O-Ring	1
4	95-9192	Split-Eyelet Body	1
5	95-9197	E-Clip	1
6	95-9196	Turret	1
†7	95-9198	O-Ring	1
8	95-9200	Plug	1
†9	95-9199	O-Ring	1
†10	99-0815	O-Ring Dust Seal	1
†11	99-0813	Seal	1
†12	41003	Diaphragm	1
13	95-9193	End Cap Assembly	1
14	95-9202	Double Hose Barb	1

Ref.	Part No.	Description	Qty.
15	95-9201	Single Hose Barb	1
16	95-9187	Nozzle Dust Cap (Incl. Ref. # 16)	22
17	40998	Seat Gasket	33
18	95-9186	Nozzle Cap, 90° (Incl. Ref. # 16)	11
19	95-9188	TTJ10 Turbo TurfJet (Std.)	11
	95-9221	TTJ2 Turbo TurfJet (Optional)	11
	95-9222	TTJ4 Turbo TurfJet (Optional)	11
	95-9223	TTJ5 Turbo TurfJet (Optional)	11
	95-9224	TTJ6 Turbo TurfJet (Optional)	11
	95-9225	TTJ8 Turbo TurfJet (Optional)	11
	95-9226	TTJ15 Turbo TurfJet (Optional)	11
20	95-9203	Hose Barb x 1/2" NPT	1
21	95-9314	90° Elbow, 1/2" FPT x 3/4" H.B.	1
22	95-9185	Turret Body Clamp	11
23	92-0045	Hose Clamp, 3/4" Hose	22
24	41340	Boom Hose, 3/4" x 50"	3
25	40506	Jumper Hose, 3/4 x 19"	6
26	95-2229	Jumper Hose, 3/4 x 21"	2
27	99-0814	Pivot Pin, 303 S.S.	1

* Not Illustrated

† Denotes parts in Seal Kit #99-0816

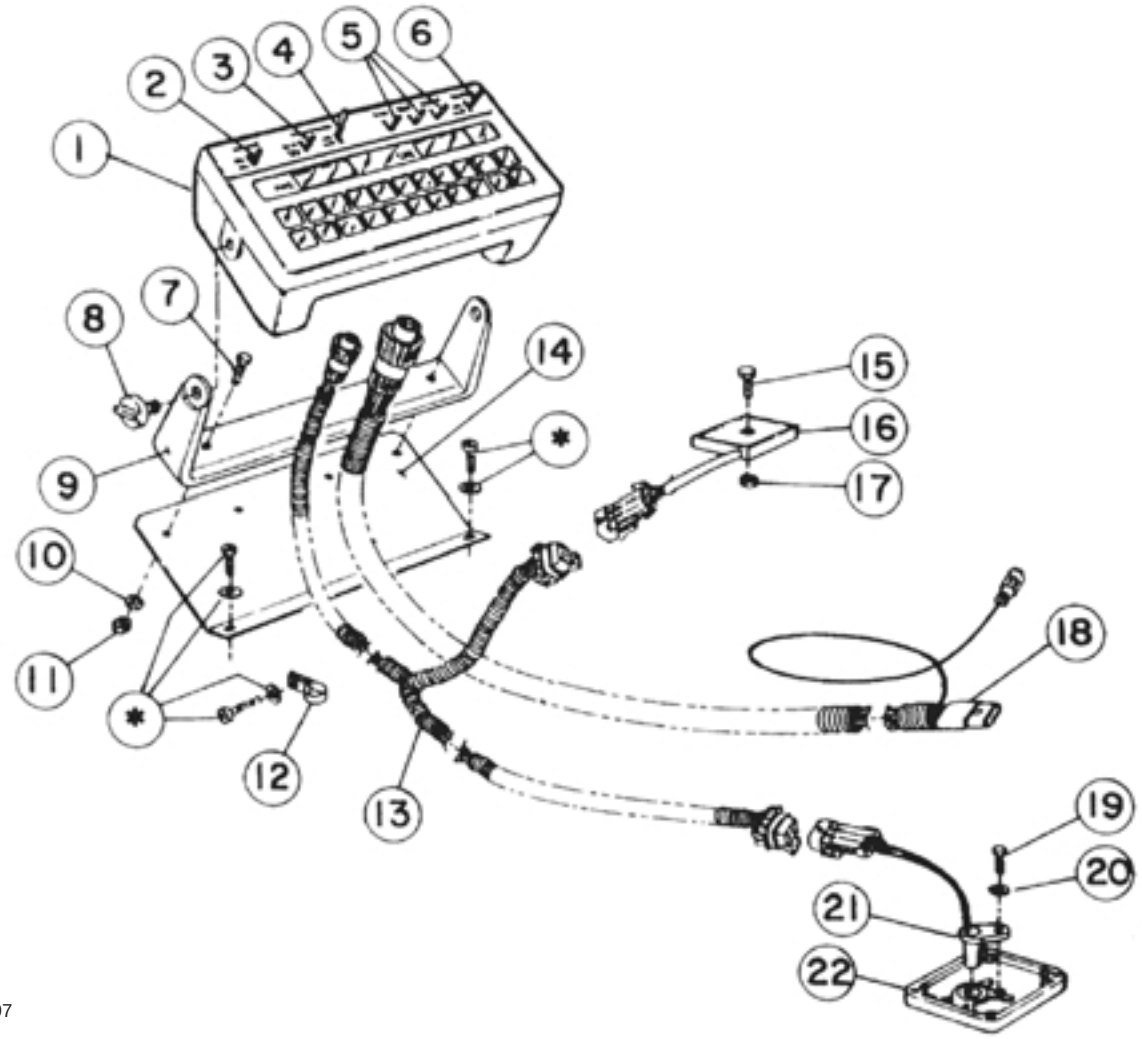

1497

CONTROL CONSOLE (3000)

Ref.	Part No.	Description	Qty.
1	41472	Control Console	1
	41344	Console Protective Cover	1
2	42722	POWER Switch	1
3	42723	Rate 1/Rate 2 Manual Switch	1
4	42724	MAN AJD Switch	1
5	42558	BOOM Switch	3
6	42725	MASTER Switch	1
	42715	Fuse Holder	1
7	321-6	HHCS, 1/4 NC x 1"	2
8	41473	Mounting Knob	2
9	41474	Mounting Bracket	1
10	3253-3	Lock Washer, 1/4	2
11	3217-5	Hex Nut, 1/4 NC	2

Ref.	Part No.	Description	Qty.
12	41230	Cable Clamp	2
13	92-2661	Wiring Harness - Speed Sensor	1
14	92-3679	Control Console Bracket	1
15	32105-26	Pan Hd. Mach. Screw, #8 x 1-1/2	1
16	92-2612	Frequency Divider	1
17	3217-25	Hex Nut, #8 NC	1
18	92-3688	Control Console Cable	1
19	48-7610	Screw, M6 - 1.0 x 12	1
20	48-8020	Lock Washer	1
21	85-4350	Speed Sensor	1
22	92-3736	Sensor Cover Assy	1
	92-0810	Cover	1
	92-3735	Oil Seal	AR

* Indicates fasteners included with the Vehicle.

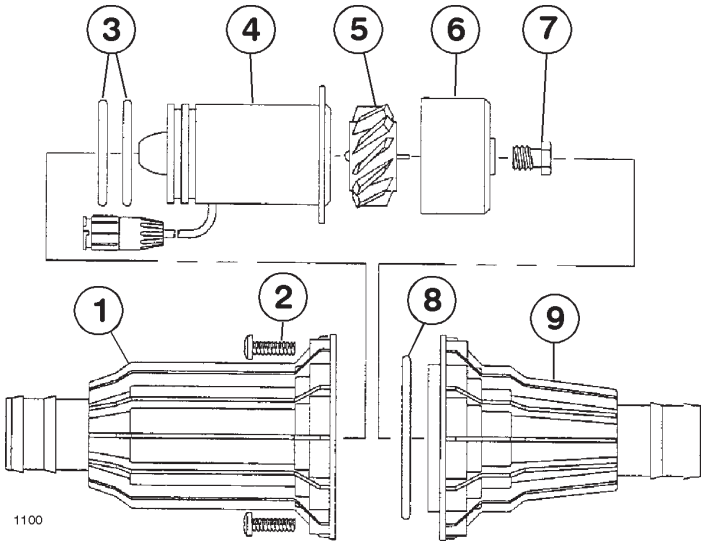

FLOW METER

Ref.	Part No.	Description	Qty.
1	42475	Sensor Housing	1
2	42476	S.S. Screw, #10 x 3/4"	12
3	93-1098*	O-Ring (Viton)	2
4	42477	Dual O-Ring Transducer Assy	1
5	42478	Turbine	1
6	42479	Turbine Hub/Bearing Ass'y	1
7	42480	Turbine Stud Assembly	1
8	42469	O-Ring (Viton)	1
9	42481	Hub Housing w/Inserts	1
10	41483	Mounting Bracket (not shown)	1

* Included with Transducer, Part No. 42477

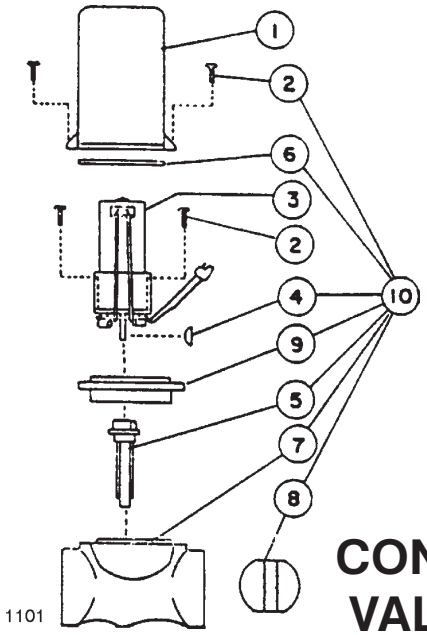

CONTROL VALVE

Ref.	Part No.	Description	Qty.
1	42318	Valve Cover	1
2	42482	Screw, #6 x 3/4"	6
3	42483	Motor Assy	1
4	42484	Woodruff Key	1
5	42485	Coupler Shaft	1
6	42470	Seal (Tetraseal)	1
7		Valve Body	NS
8	42486	Butterfly	1
9	42487	Isolation Flange Assy	1
10	42488	Valve - Iso-Body Kit	1

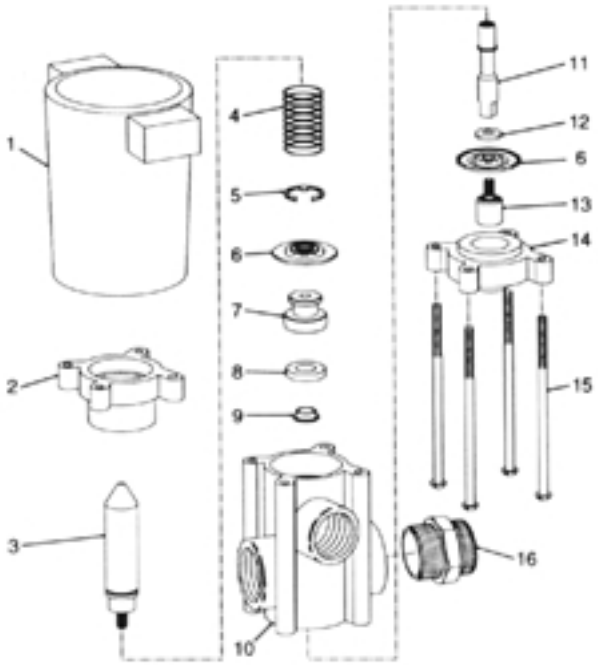

SOLENOID VALVE

Ref.	Part No.	Description	Qty.
1	95-9317	Coil Ass'y - Nylon Encapsulated	1
2	92-0364	Upper Diaphragm Housing (blk)	1
3	95-9318	Armature	1
4	***	Spring	1
5	95-9319	Retaining Ring - Steel, Plated	1
6	***	Diaphragm - Viton	2
7	92-3681	Seat Washer Retainer - S.S.	1
8	***	Seat Washer - Viton	1
9	42136	Spacer - Stainless Steel	1
10	42137	Body - Polypropylene (black)	1
11	92-3682	Stem - Stainless Steel	1
12	42134	Washer - Stainless Steel	1
13	92-0367	Lower Diaphragm Piston - S.S.	1
14	92-0368	Lower Diaphragm Housing (blk)	1
15	42143	Screw - Stainless Steel	4
16	42884	Connecting Nipple - (black)	AR

*** Indicates parts included in Viton Seal Kit.
Order Part No. 95-9316.

NOTES:



Helping you put quality into play.®