TORO®

Model No. 41120-80101 & UP
Model No. 41128-80101 & UP
Model No. 41020-80101 & UP
Model No. 41021-80101 & UP
Model No. 41130-80101 & UP
Model No. 41038-80101 & UP

SET-UP AND PARTS CATALOG

PRO-CONTROL™ SPRAY SYSTEM
for the MULTI-PRO™ 1100 Vehicle

Refer to the illustrated Parts List for the details of parts used in assembling the Pro-Control™

NOTE: "Right", "Left", "Front" and "Rear" are referenced while seated in the operator's position.

CONSOLE COMPUTER:

1. Remove four (4) 1/4" x 5/8" washer hd cap screws to remove the Rear Panel from the Steering Console.

2. Remove the knock-out plug in the front of the Steering Console and insert the large grommet. See FIG. 1.

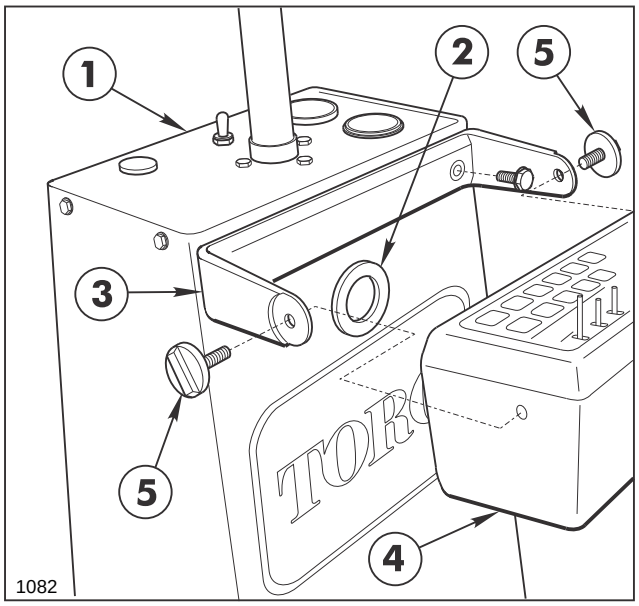

FIG. 1

1. Steering Console
2. Grommet
3. Mounting Bracket
4. Console Computer
5. Mounting Knobs

3. Remove the "U"-shaped Mounting Bracket from the Console Computer and secure the Mounting Bracket to the Steering Console with two (2) 1/4" x 3/4" washer hd. screws as shown in FIG. 1.

4. Reinstall the Console Computer within the Bracket and secure with the two (2) Mounting Knobs.

5. Insert the Console Control Cable from inside the Steering Console, through the grommeted hole, and plug it into the receptacle in the rear of the Computer. Secure with locking ring.

6. Route the Cables through the three "U" shaped brackets under the left side of the Vehicle frame, toward the rear of the Vehicle. Secure the cables with the plastic ties provided and Connect the Console Control Cable to the 3 ft. Flow Control Cable.

7. Turn the Computer's "POWER ON/OFF" Switch to "OFF".

8. Route the red and white Battery Wires of the Console Control Cable to the Fuse Block mounted inside the Seat Box.

9. Crimp the spade terminal to the white wire. Crimp the push-on terminal to the red wire. See FIG. 2.

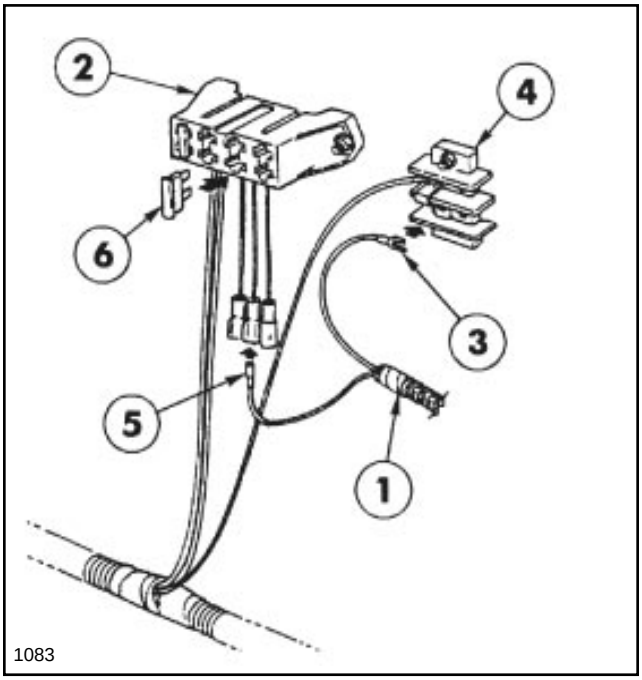

FIG. 2

1. Console Control Cable
2. Fuse Block
3. Spade Terminal
4. Ground Terminal
5. Push-On Terminal
6. Fuse (20-Amp)

10. Ground the spade terminal on the white wire to the Ground Terminal Block.

©The TORO Company - 2000
All Rights Reserved

CONSOLE COMPUTER (Cont'd):

11. Connect the push-on terminal on the red wire to the male terminal on the red wire coming from the Fuse Block.

12. Insert the 20-amp Fuse into the Fuse Block receptacle.

NOTE: The remaining Wiring Harness connections will be made after the Tank and Saddle and the Boom Frame are installed on the Vehicle.

SPEED SENSOR:

1. Mount the four (4) Wheel Magnets to the inside rim of the Vehicle's left rear wheel with eight (8) hex nuts and four (4) lock washers as shown in FIG. 3. **IMPORTANT! Magnets must be mounted in alternating red-black sequence.**

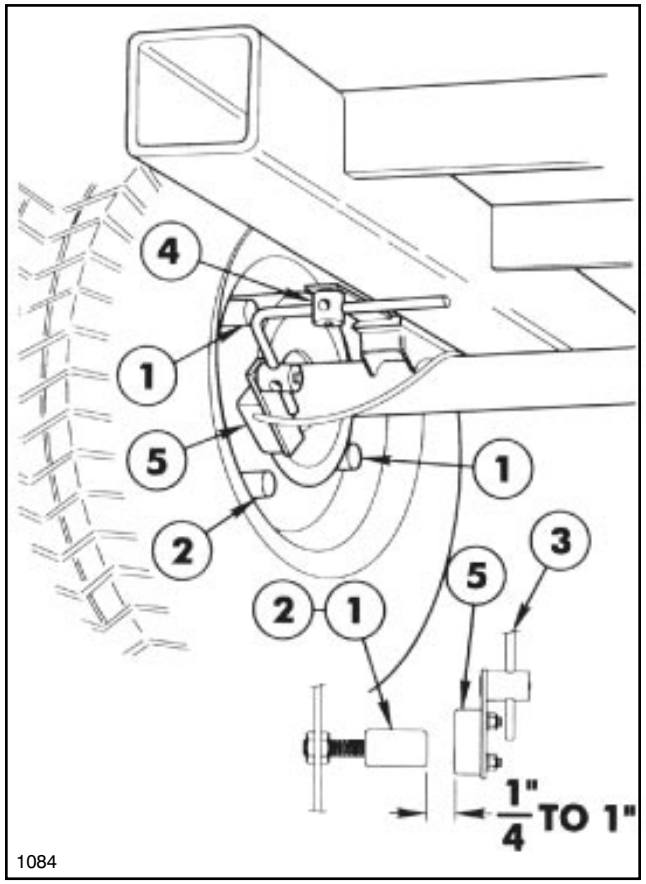

FIG. 3

1. Wheel Magnet (RED)
2. Wheel Magnet (BLACK)
3. Sensor Rod
4. Turret Assembly
5. Sensor Switch

2. Insert the longest leg of the Sensor Rod into the hole in one of the Turret Assemblies. Tighten the flat head screw holding the Turret to the Rod.

3. Mount the Turret Assembly to the bottom of the Angle welded to the Vehicle Frame (behind the angle holding the Rear Axle Mount) using two (2) 1/4" x 1" cap screws, lock washers and hex nuts.

4. Assemble the Sensor Switch to the other Turret Assembly with the two (2) 1/4" lock washers and hex nuts.

5. Insert the shorter leg of the Sensor Rod into the Turret Assembly so that the Sensor Switch is parallel with the Sensor Rod as shown.

6. Position the Sensor Switch on the Sensor Rod so that as the Wheel rotates, the Magnets pass across the center of the black molded Switch Assembly.

7. Adjust the position of the longer leg within the Turret Assembly until there is a clearance gap of 1/4" to 1" between the Switch Assembly and the Wheel Magnets.

8. Rotate the Wheel and make sure the clearance gap is correct between each of the four Wheel Magnets. When adjustment is correct, secure the Turrets to the Sensor Rod by tightening the square hd. set screws.

9. Route the Speed Sensor Cable over the Vehicle's Rear Axle, along the left hand side of the Frame, and through the hole in the floor board to the inside of the Steering Console.

10. Bring the Cable up and through the grommeted hole in the Steering Console and plug it into the rear of the Console Computer. Secure with locking ring.

CENTRIFUGAL PUMP:

NOTE: If the optional Rollover Protection Structure (ROPS) is to be installed on the Vehicle, it must be installed prior to installing the Centrifugal Pump. See the Installation Instructions furnished with the ROPS (model no. 41185); or the ROPS Adaptor Kit (part no. 92-8240).

NOTE: If the Multi-Pro Vehicle's Serial no. is between 20101 and 30370, disregard Step 1 in the following instructions.

1. Mount the Pivot Mounting Plate to the angle on the bottom of the Vehicle Frame, using two 1/2" x 1-1/4" cap screws and lock nuts. See FIG. 4.

2. Align the pivot tubes on the Pump Pivot Plate with those on the Pivot Mounting Plate. Insert the two (2) clevis pins and secure with two (2) hairpin cotters. Shim between two rear pivot tubes as required with two provided flat washers to give clearance between pump and tank. See FIG. 4.

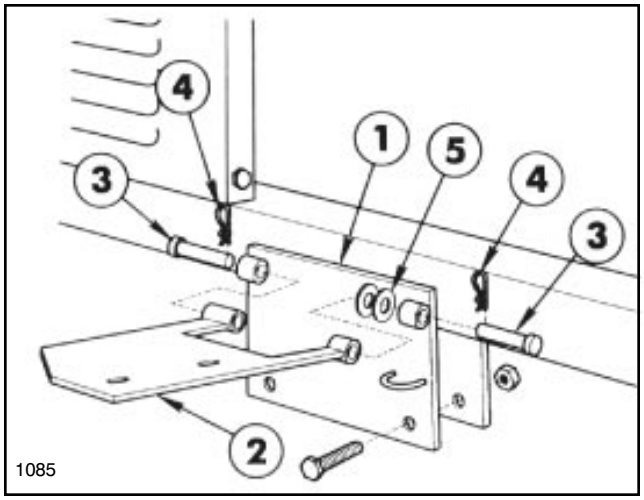

FIG. 4

1. Pivot Mounting Plate
2. Pump Pivot Plate
3. Clevis Pin
4. Hair Pin Cotter
5. Flat Washers

NOTE: In the following instructions, "sealer" refers to Teflon Tape.

3. Secure the Centrifugal Pump in a vise. Apply thread sealer and install the fittings to connect the Suction, Supply, Agitator and Overflow Hoses to the Pump as shown in FIG. 5.

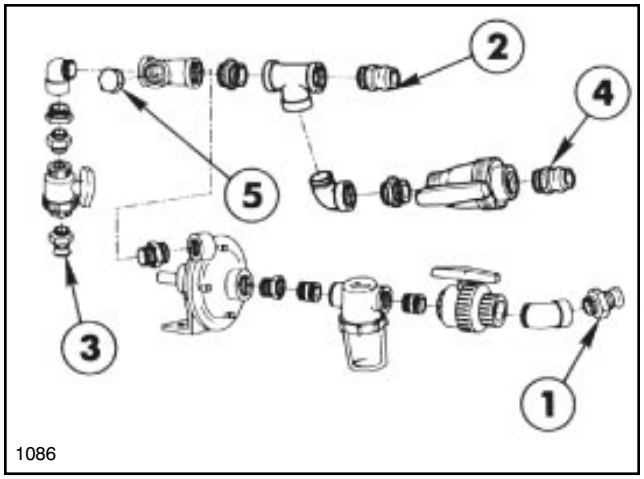

FIG. 5

1. Suction
2. Supply
3. Agitator
4. By-pass
5. Accessory

4. Assemble the Pump Drive Pulley onto the Pump shaft with the Pulley's **hub** facing **away** from the Pump (FIG. 6).

5. Assemble the Centrifugal Pump and the Spring Mounting Angle to the Pump Pivot Plate, using two (2) 3/8" x 1-1/2" cap screws, flat washers and lock nuts as shown in FIG. 6.

6. Using a straight edge as a guide, position the Pump Pulley so that it is in alignment with the Engine's Drive Pulley. When alignment is correct, tighten the two (2) set screws in the Pump Pulley's hub.

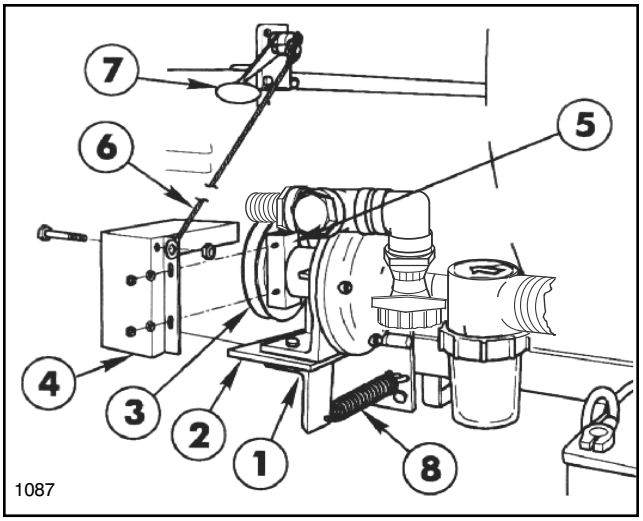

FIG. 6

1. Spring Mounting Angle
2. Pump Pivot Plate
3. Pump Pulley
4. Pump Belt Cover
5. Pump Cover Clamp
6. Pump Cable
7. Accessory Control Lever
8. Pump Spring

7. Install the Pump Drive Belt around Pump Pulley and Engine drive Pulley.

8. Loosely mount the Pump Belt Cover to the Pump hub with Pump Cover Clamp and two (2) 3/8" flat washers and lock nuts.

9. Insert 3/8" x 4" cap screw through the Pump Cover and into hole in Pump Cable's end fitting. Secure Cable to Cover with a 3/8" lock nut.

10. Remove hair pin cotter and flat washer from the pin in the Accessory Control Lever. Push the Control Lever down (engaged). Slide the unattached end of Cable onto the pin and secure with flat washer and hair pin cotter previously removed.

11. Connect one end of Pump Spring to the ring on Pump Pivot Plate and the other end through the hole in Spring Mounting Angle.

12. Engage Accessory Control Lever... **DO NOT START THE ENGINE!** Adjust Belt Guide around engine pulley to obtain 1/8" clearance between the inside of the Belt Guide and the Belt.

13. Rotate Belt Cover around the Pump hub until tension on Pump Control Cable requires a small amount of pressure to snap the Control Lever "over-center" to disengage the Pump drive. Make sure there is 1/8" clearance between the Belt and the inside of Belt Cover. Tighten lock nuts after adjustment is complete.

If Step 13 does not achieve the necessary tension on the Control Cable, loosen the Pump mounting bolts and slide the Pump on the Pivot Plate to move it away from the Vehicle Frame, increasing the Cable tension.

TANK ASSEMBLY:

1. Cut the shipping straps and remove the Spray Tank and Saddle Assembly from the shipping skid.

NOTE: In the following instructions, sealer refers to Teflon Tape when used for pipe fittings.

2. Apply thread sealer and install the 90° barbed elbow into the bottom of Spray Tank.

NOTE: Position the barbed elbow as shown in FIG. 7, so that it will angle toward the left front of the Vehicle after the Tank is installed on the Vehicle.

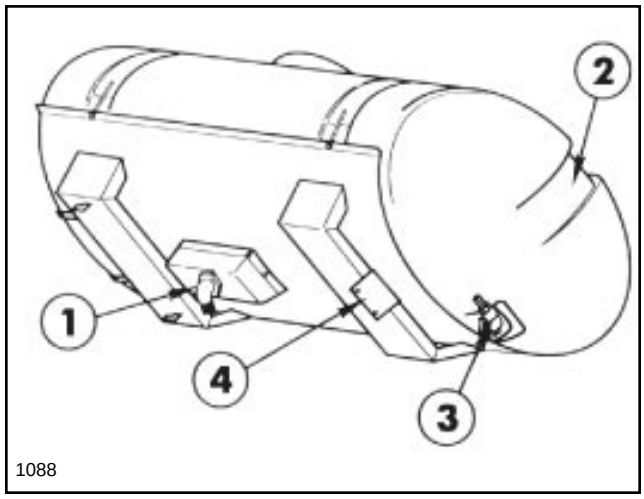

FIG. 7

1. Barbed Elbow (Suction)
2. Spill-way
3. Elbow & Hose Barb (Overflow)
4. Mounting Member

3. Attach the 11/4" x 21" Suction Hose to the barbed elbow in the bottom of Tank and secure with hose clamp. Attach the 1" barbed female quick coupler to the other end of the Suction Hose and secure with hose clamp.

4. Attach the 1/2" x 42" Agitator Hose to the 1/2" barbed elbow in the front of Tank and secure with hose clamp. Attach the 1/2" barbed female quick coupler to the other end of the Agitator Hose and secure with hose clamp.

5. Apply thread sealer and install the 90° street elbow and a hose barb into the fitting at the rear ("spillway") of tank. Attach the 1" x 58" Overflow Hose to the hose barb and secure with hose clamp. Attach female quick coupler to the other end of the Bypass Hose and secure with hose clamp.

6. Place Tank and Saddle Assembly on Vehicle Frame.

7. Slide Tank and Saddle forward, to hook the two lugs at front of Saddle under the Vehicle's cross member, resting the base at rear of Saddle over the Vehicle's rear cross member.

8. Secure the rear Saddle base to the Vehicle's cross member with two (2) 1/2" x 1-1/2" cap screws, flat washers, lock washers and hex nuts.

9. Route the Suction Hose over left side of the Vehicle frame and connect couplers at Suction Ball Valve.

10. Route the Agitator Hose over the Vehicle frame and under Pump to connect the couplers at the Agitator Ball Valve.

11. Route the Overflow Hose forward, through Tank Saddle, along the left side of the Vehicle frame. Connect the couplers at the By-pass Ball Valve.

12. Install Anti-Siphon Device as shown in the Anti-Siphon Kit Instructions provided.

BOOM HOLD-IN & EYE WASH TANK:

1. Mount right Hold-In Brace assembly to the two (2) 5/16" carriage bolts in the front Tank Band using two (2) 5/16" flat washers and hex nuts. Tighten securely. See FIG. 8.

2. Attach right Boom Hold-In assembly to Hold-In Brace assembly using two (2) 1/4" U-bolts and four (4) 1/4" lock nuts. Attach Rubber Hold-Down to Hold-In Brace assembly. Repeat steps 1 and 2 for left side.

3. Mount Wash Tank Bracket (open end forward) to right-hand hold-In Brace assembly using two (2) 5/16" x 1" hex hd. cap screws, flat washers, and hex nuts. Place Cean Water Wash Tank into Wash Tank Bracket and secure with Rubber Hold-Down, as shown in FIG. 8.

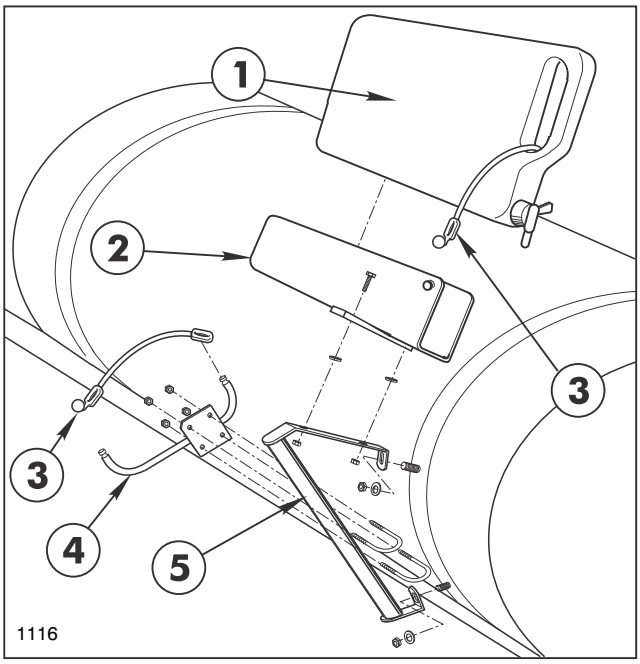

FIG. 8

1. Clean Water Wash Tank
2. Wash Tank Bracket
3. Rubber Hold-Down
4. Boom Hold-In Assy
5. Hold-In Brace Assy

FLOW METER:

1. Attach the 1-1/4" x 3" Adaptor Hose to the barb on the outlet end of the Flow Meter. **Note flow direction arrow on flow meter.** Secure with hose clamp. See FIG. 9.

2. Slide a 1-1/4" hose barb into the other end of the Adaptor Hose and secure with a hose clamp.

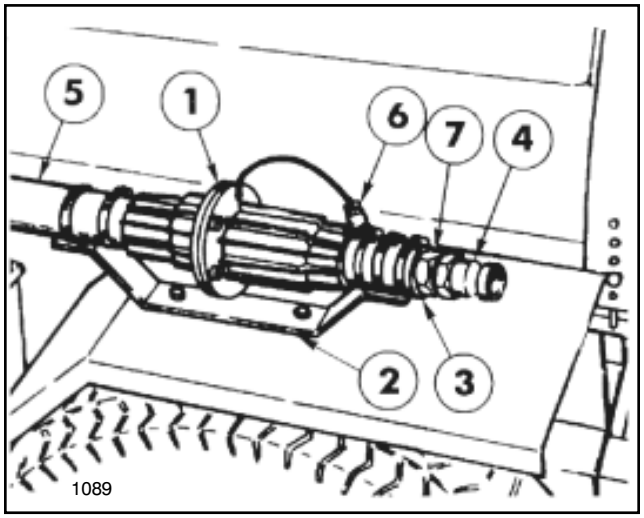

FIG. 9

1. Flow Meter
2. Mounting Bracket
3. Adaptor Hose
4. Quick Coupler (male)
5. Supply Hose
6. Flow Control Cable Connector
7. Hose Barb

3. Apply thread sealer and attach the 1" male quick coupler to the hose barb's threaded end.

4. Secure the Flow Meter to the Mounting Bracket with two (2) hose clamps furnished.

5. Connect the 1-1/4" x 18" Supply Hose between the barb on the inlet end of the Flow Meter and the hose barb in the tee at the Pump. Secure with two (2) hose clamps.

6. Position the completed Flow Meter Assembly on the Mounting Bracket as shown in FIG. 9.

IMPORTANT! The flow must be in the direction of the arrow on the Flow Meter.

7. Install the Mounting Bracket to the Vehicle's left rear fender, using two (2) 5/16 x 3/4" flange hd. screws and flange lock nuts. See FIG. 8.

8. Connect the wire from the Flow Meter to the mating connector on the Flow Control Cable.

BOOM FRAME ASSEMBLY:

Note: If installing the "Enclosed Boom" option in place of the Standard Boom, disregard this entire Boom Frame Assembly Section. Refer to the "Enclosed Boom" Set-up and Parts manual for the installation instructions.

1. Apply a heavy coating of grease to the tubes of the two Boom Mount Assemblies and insert them into the Vehicle Frame as shown in FIG. 10.

NOTE: Note the position of the angle member of the Boom Mount Assemblies, in relation to the tube member. They must be positioned as shown in FIG. 10 for the mounting of the Cross Support Angle.

NOTE: Steps 3 and 4 apply to the assembly of the Standard Boom only. If the optional "Boom Pivot Kit" is to be installed, see the instructions

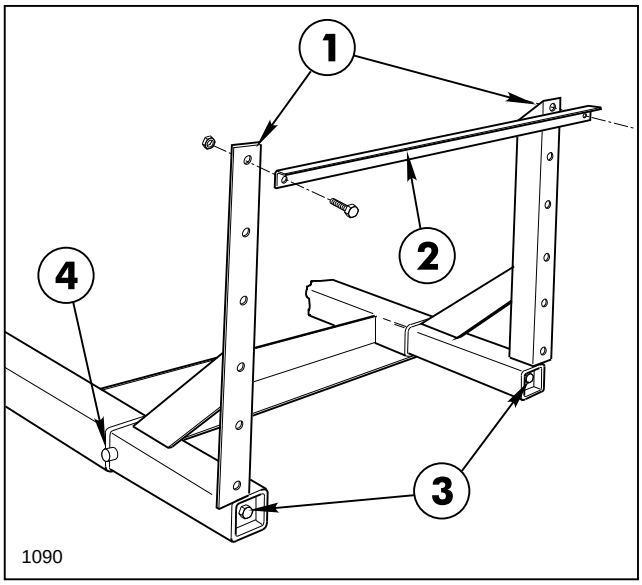

FIG. 10

1. Boom Mount Assy.
2. Cross Support Angle
3. Wedge Screw
4. Stop Pin

furnished with that kit. The Cross Support to be used with that kit is different than the Support used on the Standard Boom.

3. Position the Cross Support Angle and attach it to the Boom Mount Assemblies with two 1/2" x 1-1/4" hex hd cap screws, and lock nuts.

4. Position the Spacer Tubes between the Boom Mount uprights and the lugs on the Main Frame Tube. Use two 1/2" x 4" hex hd. cap screws and lock nuts to secure the Main Frame Tube to the uprights. See FIG. 11.

5. Using a torque wrench, tighten the 1/2" x 18" wedge screws that join the Wedges to the Boom Mounts. Tighten to 50 ft. lbs. See FIG. 10

6. Position the two (2) Center Boom angles on the Main Frame and secure them to the Main Frame tube with two (2) square U-bolts, four (4) flat washers and hex nuts. See FIG. 11.

7. Center and attach the Center Boom Pipe to the two Center Boom Angles with two (2) Boom Clamps, 3/8" x 1" cap screws, flat washers and lock nuts.

BOOM FRAME (Cont'd):

8. Loosely attach the Double Barb Turret Body with the Turret Body Clamp in the approximate center of the Center Boom Pipe. For the most uniform spray coverage, position all Nozzles level as shown in FIG. 11.

9. Loosely attach a single barb Turret Body with the Turret Body Clamp to LH end of the Center Boom Pipe. Loosely attach a threaded Turret Body with the Turret Body Clamp to RH end of the Center Boom Pipe.

10. Place two Hose Clamps on two 3/4" x 19" Jumper Hoses and connect the two "end" Turret Bodies to the Double Barb Turret Body. Space nozzles 20" apart and tighten fasteners securely. Apply thread sealer and install the 90° 3/4" Hose Barb on the Threaded Turret Body. See FIG. 11.

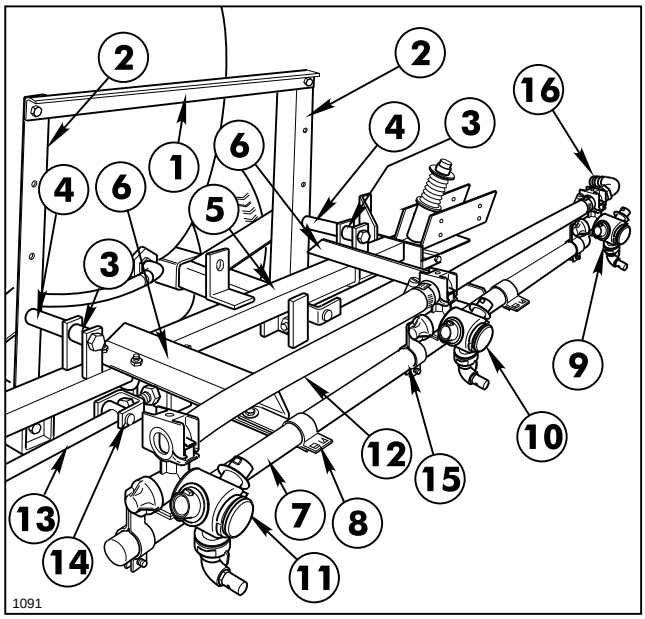

FIG. 11

1. Cross Support Angle
2. Boom Mount Assy.
3. Spacer Tube, 1" lg.
4. Spacer Tube, 1-1/4" lg.
5. Main Frame Tube
6. Center Boom Angle
7. Center Boom Pipe
8. Boom Clamp
9. Threaded Turret Body
10. Double Barb Turret Body
11. Single Barb Turret Body
12. Jumper Hose
13. Strut Assembly
14. Adjustable Clevis
15. Nozzle Body Bracket
16. 90° 3/4" Hose Barb

11. Attach the two Strut Assemblies to the two Adjustable Clevis Assemblies found on each side of the Main Frame tube with two (2) 1/2" x 2" clevis pins and two (2) 1/8" x 1" cotter pins. See FIG. 11.

IMPORTANT! DO NOT over-tighten the nuts in steps 12 and 14. The clamping action could crush the Boom Pipe.

12. Insert the plugged end of an Extension Boom Pipe into the Pivot Assembly and secure with four (4) 1/4" x 1-1/4" cap screws and lock nuts. Repeat on the opposite side to assemble the other Extension Boom. See FIG. 12.

13. Attach the Boom Support Assembly to the Pivot Assembly, using a 5/16" x 1-1/2" cap screw and lock nut. See FIG. 11 & 12.

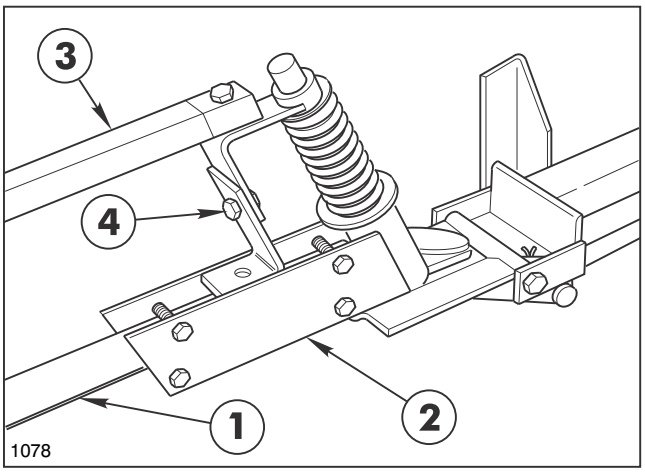

FIG. 12

1. Extension Boom Pipe
2. Pivot Assembly
3. Boom Support Assembly
4. Height Adjustment

14. Secure the two plates of the Boom Support Assembly to one of the Extension Boom Pipes, using two (2) 1/4" U-bolts, four (4) lock nuts and flat washers. See FIG. 13.

15. Assemble the Boom Support Assembly to the other Extension Boom Pipe.

16. Adjust the Booms to a level position by adjusting the jam nuts on the adjustable clevis assemblies (See FIG. 11) to the desired position, then tighten end nuts against Main Frame plate.

17. Attach three double barb and one single barb Turret Bodies with Clamp Assemblies on each Extension Boom Pipe as shown in Fig. 13.

18. Level Nozzles and space 20" apart. Connect the Turret Body Assemblies with 3/4" x 19" Jumper Hoses . Secure with hose clamps. See FIG. 13.

NOTE: Two Jumper Hoses provided with this kit are 21" long. They should be cut to 19" long for this set-up.

19. Install the plastic Boom Caps over the ends of the Boom Pipes.

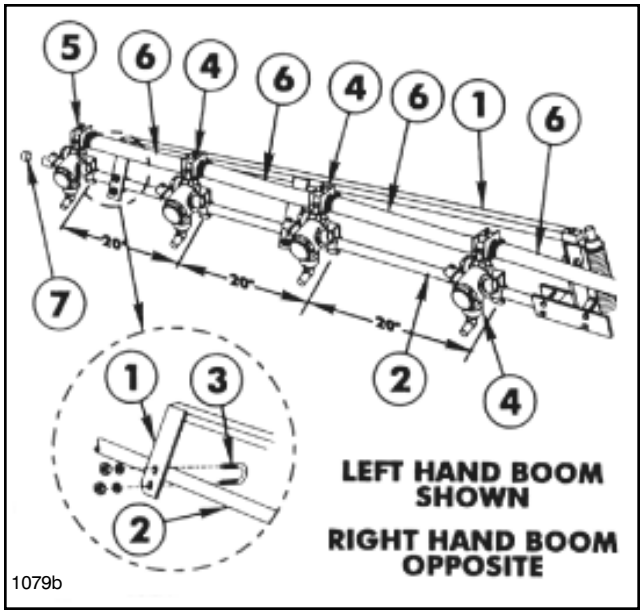

FIG. 13

1. Boom Support Assembly
2. Extension Boom Pipe
3. U-bolt
4. Double Barb Turret Body
5. Single Barb Turret Body
6. Jumper Hose 3/4 x 19"
7. Boom Cap

CONTROL VALVE/SOLENOID ASSEMBLY:

1. Apply thread sealer and install the 1" x 3/4" reducing nipple and 45° 3/4" elbow into the outlet port of the Motorized Control Valve. Install 1" x 3/4" reducer bushing, 45° 3/4" elbow and 3/4" hose barb into the inlet port of the Control Valve.

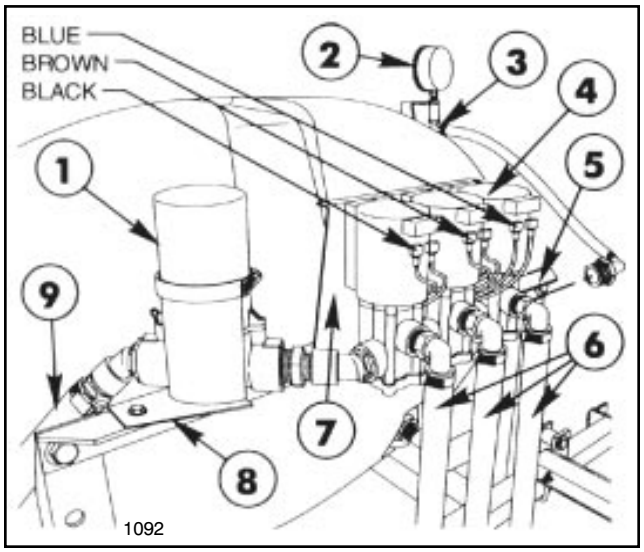

FIG. 14

1. Control Valve
2. Pressure Gauge
3. Barbed Elbow
4. Solenoid Valve Assy.
5. Cross Support Angle
6. Boom Feeder Hose
7. Solenoid Mtg. Bracket
8. Control Valve Bracket
9. Flow Meter Hose

2. Connect the Motorized Control Valve and the Solenoid Assembly by screwing the two together. See FIG. 14.

3. Apply thread sealer and install three (3) 90° 3/4" hose barbs into the outlet ports of Solenoid Valves. Install 3/4" x 3/8" barbed 90° elbow in the end of the Solenoid Assembly. see FIG. 14.

4. Loosely attach the Control Valve Bracket to the Cross Support with two (2) 5/16" x 3/4" cap screws and flange lock nuts.

5. Install two (2) Grommets in 1" dia. holes in Solenoid Mounting Bracket.

6. Slide head of 6M x 16 mm hex hd. screw to the top of the mounting groove in each Solenoid Valve. Assemble Control Valve and Solenoid Valve assembly to the Solenoid Mounting Bracket using three (3) 6M x 16 mm screws just installed. Secure Solenoids with three (3) 6M hex nuts and lockwashers. See FIG. 14.

7. Install valve and bracket assembly to the Cross Support as shown in FIG. 14. Secure with two (2) 5/16" x 3/4" hex flange hd. screws and flange lock nuts.

8. Secure the Control Valve to it's Mounting Bracket with the large hose clamp. Tighten all fasteners securely.

9. Assemble the Pressure Gauge and the 1/4" x 3/8" barbed elbow to the Gauge Bracket. Remove the protective cap and mount the Bracket to the carriage bolt in the rear Tank Band, using a 5/16" flange lock nut.

10. Connect the Pressure Gauge to the Solenoid Assembly with the 3/8" x 32" hose. Secure the hose with hose clamps.

11. Connect the 1" x 24" Flow Meter Hose to the hose barb in the Motorized Control Valve and secure with a hose clamp.

12. Install the barbed female quick coupler on the other end of the Flow Meter Hose and secure with a hose clamp.

13. Connect the couplers at the Flow Meter.

14. Connect the three 3/4" x 50" Boom Feeder Hoses to the 90° barbs in the Solenoid Valves and secure with hose clamps.

15. Place a hose clamp on the Center Boom Feeder Hose and attach it to the 90° hose barb at the RH end of the Center Boom Pipe.

16. Place a hose clamp on the right and left Boom Feeder Hoses and attach them to the double barb Nozzles on the right and left Extension Boom Pipes.

FLOW CONTROL CABLE:

1. Route the Flow Control Cable up, along the left Boom Mount, and across the Cross Support Angle, to make connections to Motorized Control Valve and Solenoid Valves. See FIG. 15.

2. Feed the wires through the two (2) Grommets in the Solenoid Mounting Bracket. Connect the black wire on left solenoid, brown on middle solenoid, blue on right solenoid and a white jumper on all three solenoids. See FIG. 15.

3. Secure the Flow Control Cable to the Boom Frame with the R-clamp and plastic ties provided.

4. Install Solenoid Valve Shield to top of Solenoid Mounting Bracket and secure with two (2) 1/4" x 3/8" flange hd. screws.

FINAL CHECKS:

1. Recheck and tighten all fasteners and hose clamps securely.

2. Fill the tank with clean water and check for any leaks.

3. Refer to the Pro-Control™ Operator's Manual for the proper calibration and operation of the Pro-Control Spray System.

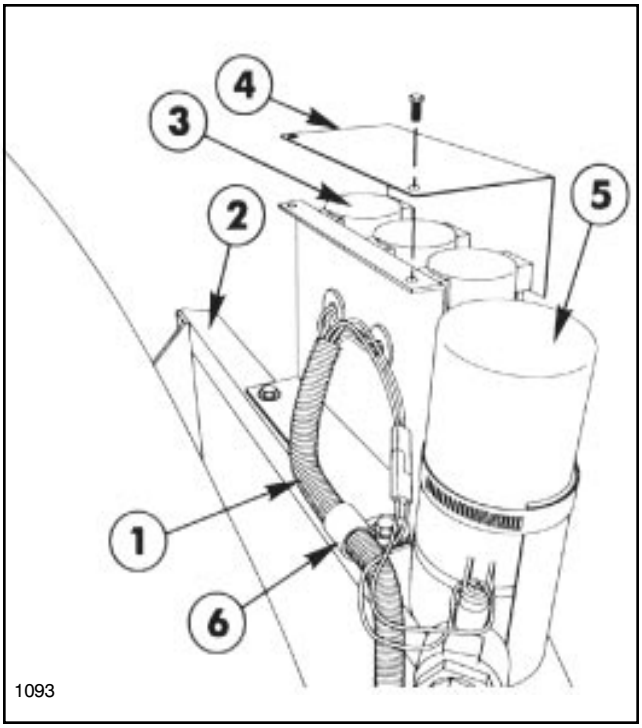

FIG. 15

1. Flow Control Cable
2. Cross Support Angle
3. Solenoid Assembly
4. Solenoid Valve Shield
5. Control Valve
6. R-Clamp

SAFETY INSTRUCTIONS

The following safety and instruction decals are installed on the Pro-Control™. If any become damaged or illegible, replace them. Decals and part numbers are listed below and in the parts catalog. Order replacements from your Authorized Toro Distributor.



Part No. 93-0688: Located on Lid of Spray Tank



Part No. 87-0570: Located on Rear Tank Band



Part No. 93-0800: Located on side of Clean Water Wash Tank Saddle.

NOTES:

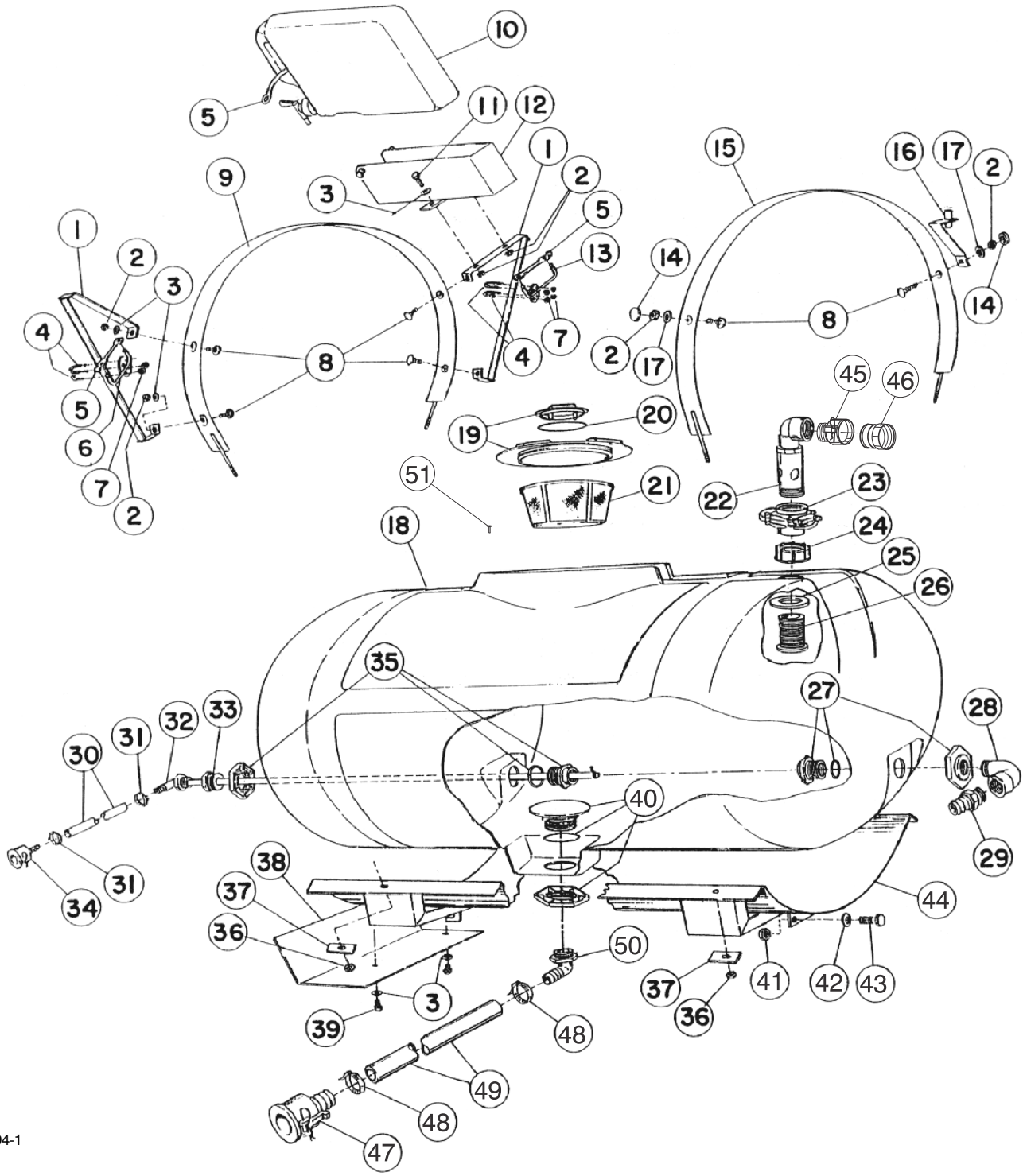
1094-1

PRO-CONTROL TANK (MULTI-PRO 1100)

Ref.	Part No.	Description	Qty.
1	42983	Hold-In Brace Assembly	2
2	3217-6	Hex Nut, 5/16	6
3	3256-23	Flat Washer, 5/16	4
4	92-0010	U-Bolt, 1/4	4
5	42198	Rubber Hold-Down	3
6	42259	Boom Hold-In Assy (left)	1
7	32146-17	Lock Nut, 1/4	8
8	3230-1	Carriage Bolt, 5/16 x 3/4	6
9	42880	Tank Band Assy (front)	1
10	92-3976	Clean Water Wash Tank	1
	93-0828	Spigot (f/w 92-3976 Tank)	1
11	322-5	HHCS, 5/16 x 1"	2
12	92-3969	Wash Tank Bracket	1
13	42316	Boom Hold-In Assy (right)	1
14	42452	Protective Cap	2
15	43013	Tank Band Assy (rear)	1
16	42277	Pressure Gauge Bracket	1
17	3252-4	Lock Washer, 5/16	2
18	42879	Tank Assembly - 160 Gals.	1
19	42322	Tank Lid (f/w Tank Assy.)	1
	92-3765	Vent Cap	1
20	42859	Breather Gasket	
		(f/w Tank Assy.)	1
21	42323	Filler Basket (f/w Tank Assy.)	1
22	43069	Stand Up Assembly	1
23	43064	Knife Valve	1
24	43068	Fly Nut, 2" NPT	1
25	43067	Sealing Washer	1
26	43066	Bulk Head, 2" NPT	1
*	93-0832	Fillwell (for Tank Lid)	1

Ref.	Part No.	Description	Qty.
27	41800	Tank Fitting, 1" NPT	1
		(f/w Tank Assy)	
28	41307	90° St. Elbow, 1" NPT	1
29	92-0012	Hose Coupling, 1" MPT x 1" HB	1
30	42946	Agitator Hose, 1/2" x 42"	1
31	96609	Hose Clamp	2
32	42981	Agitator Tube Assembly	1
	42842	Barbed Elbow	1
33	41969	Reducer Bushing,	1
		3/4" MPT x 1/2" FPT	
34	40487	Female Quick Coupler, 1/2"	1
35	41801	Tank Fitting, 3/4" NPT	1
		(f/w Tank Assy)	
36	3217-7	Hex Nut, 3/8"	4
37	43014	Backing Strap	4
38	92-3525	Heat Shield	1
39	322-3	HHCS, 5/16 x 3/4	2
40	41798	Anti Vortex Fitting,	1
		1-1/4" NPT (f/w Tank Assy)	
41	3217-9	Hex Nut, 1/2	2
42	3253-7	Lock Washer, 1/2	2
43	325-5	HHCS, 1/2 NC x 1-1/4"	2
44	42878	Tank Saddle Assembly	1
45	92-0238	Quick Coupler	1
46	041316	Quick Adapter	1
47	93-0854	Quick Coupler	1
48	41327	Hose Clamp	2
49	93-0858	Supply Hose	1
50	93-0856	90° Barbed Elbow 1-1/4" NPT	1
51	93-0833	Pop Rivets (for Fillwell)	8

* Not Illustrated

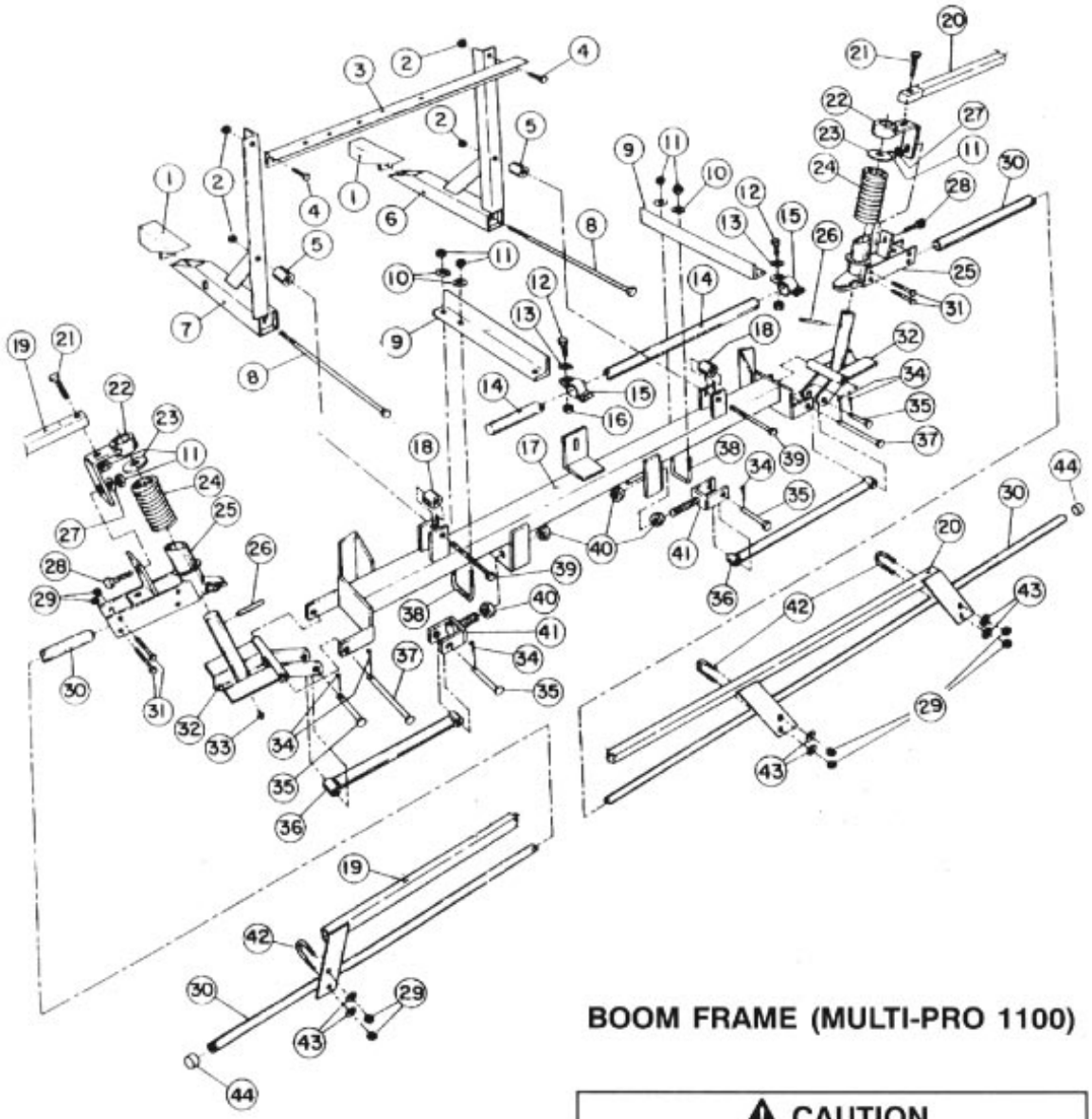

BOOM FRAME (MULTI-PRO 1100)

1095

⚠ CAUTION

THE TWO SPRINGS (REF #24) ARE UNDER APPROX. 150 LBS. OF PRESSURE. BE VERY CAUTIOUS WHEN REMOVING THE SPRING PINS (REF #26) FOR REMOVAL OF THE SPRINGS.

IMPORTANT! THE TWO BOLTS (REF #8) MUST BE TORQUED TO 50 FT. LBS.

BOOM FRAME (MULTI-PRO 1100)

Ref.	Part No.	Description	Qty.
1	42223	Tube Wedge Assy	2
2	32153-5	Lock Nut, 1/2	4
3	42225	Cross Support Angle	1
4	325-5	HHCS, 1/2 x 1-1/4"	2
5	42258	Spacer Tube, 1-1/4" lg.	2
6	42222	Boom Mount Assy	1
7	42217	Boom Mount Assy	1
8	42199	HHCS, 1/2 x 18"	2
9	42234	Center Boom Angle	2
10	3256-3	Flat Washer, 5/16	4
11	3217-6	Hex Nut, 5/16	8
12	323-6	HHCS, 3/8 x 1"	2
13	3256-4	Flat Washer, 3/8	2
14	40493	Center Boom Pipe	1
15	40494	Clamp Assy	2
16	32153-2	Lock Nut, 3/8	2
17	42227	Main Frame Tube-W. A.	1
18	42257	Spacer Tub, 1" Long	2
19	42711	Boom Support Assy - LH	1
20	42710	Boom Support Assy - RH	1
21	322-7	HHCS, 5/16 x 1-1/2"	2
22	42707	Support Bracket Assy	2

Ref.	Part No.	Description	Qty.
23*	3256-62	Flat Washer, 1" S.A.E.	2
24*	42196	Compression Spring	2
25*	42706	Breakaway Pivot Assy	2
26*	32121-78	Spring Pin, 1/4 x 2"	2
27	3256-23	Flat Washer, 5/16 S.A.E.	2
28	3230-1	Carriage Bolt, 5/16 x 3/4	2
29	32146-17	Lock Nut, 1/4	16
30	42282	Extension Boom Pipe Assy	2
31	321-10	HHCS, 1/4 x 1-3/4"	8
32*	42243	Hinge Assy	2
33*	361011	Grease Fitting	2
34	3272-11	Cotter Pin, 1/8 x 1"	6
35	42195	Clevis Pin, 1/2 x 2"	4
36	42240	Strut Assy	2
37	42194	Clevis Pin, 1/2 x 4-1/2"	2
38	301950	U-Bolt, 5/16	2
39	325-17	HHCS, 1/2 x 4"	2
40	3217-11	Hex Nut, 5/8	4
41	42237	Adjustable Clevis Assy	2
42	92-0010	U-Bolt, 1/4	4
43	3256-2	Flat Washer, 1/4	8
44	92-8420	Boom Cap	4

* Denotes parts that are available in an assembled unit. Order #42840 Breakaway Assembly.

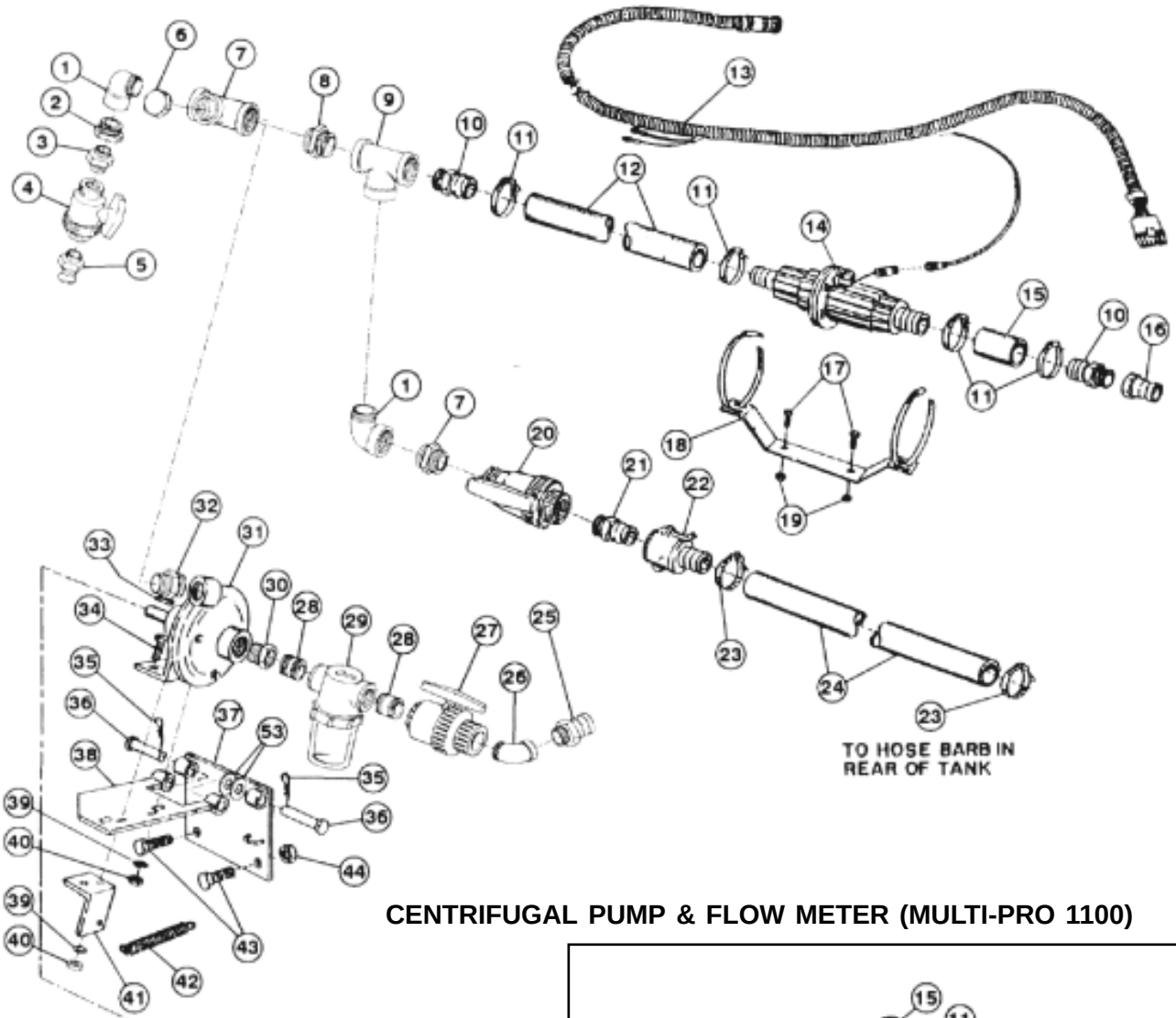

CENTRIFUGAL PUMP & FLOW METER (MULTI-PRO 1100)

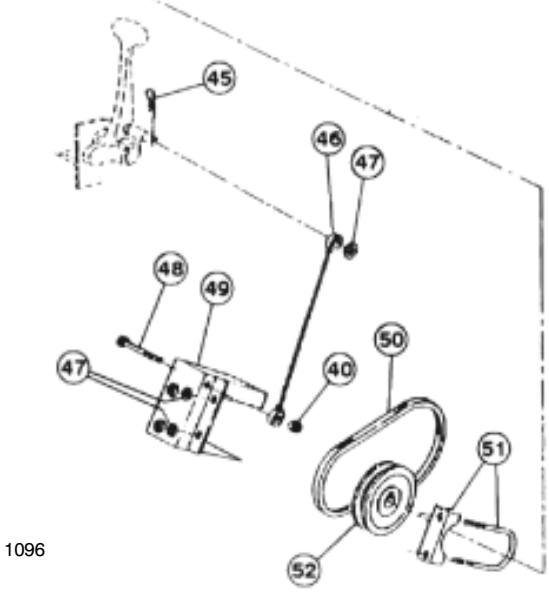

1096

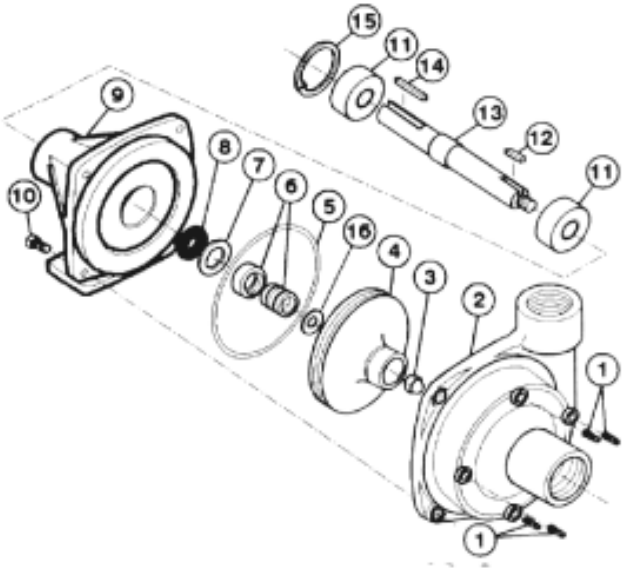

CENTRIFUGAL PUMP (93-0848)

CENTRIFUGAL PUMP & FLOW METER (MULTI-PRO 1100)

Ref.	Part No.	Description	Qty.
1	41307	90° St. Elbow, 1" NPT	2
2	41306	Red. Bushing, 1" x 1/2" NPT	1
3	41314	Close Nipple, 1/2" NPT	1
4	40192	Ball Valve, 1/2" NPT	1
5	40486	Quick Adaptor x 1/2" MPT	1
	41317	Quick Adaptor Cap	1
6	41315	Hex Plug, 1 NPT	1
7	92-8416	Cross, 1" FPT	1
8	41304	Close Nipple, 1" NPT	2
9	41305	Tee, 1" NPT	1
10	41308	Hose Barb, 1" x 1-1/4" HB	2
11	41327	Hose Clamp	5
12	42996	Supply Hose, 1-1/4" x 18-1/8"	1
13	92-3687	Console Control Cable (13 ft.)	1
14	41482	Flow Meter	1
15	41320	Adaptor Hose, 1-1/4" x 3"	1
16	41316	Quick Adaptor x 1" FPT	1
	41318	Quick Adaptor Cap	1
17	3234-5	HHCS, 5/16 x 3/4" Flange	2
18	41483	Flow Meter Mounting Bracket	1
19	32128-20	Flange Lock Nut, 5/16	2
20	40020	Ball Valve, 1" NPT	1
21	40479	Quick Adaptor, 1" MPT	1
	41318	Quick Adaptor Cap	1
22	40480	Quick Coupler x 1" Hose Barb	1
23	21146	Hose Clamp	2
24	43016	Overflow Hose, 1" x 58"	1
25	93-0888	Quik Adaptor, 1-1/4" MPT	1
	93-0853	Quik Adaptor Cap	1
26	93-0897	45° St. Elbow, 1-1/4" NPT	1
27	93-0855	Ball Valve, 1-1/4"	1

Ref.	Part No.	Description	Qty.
28	92-0050	Close Nipple, 1-1/4" NPT	2
29	42701	Suction Strainer	1
	93-0687	Strainer Bowl (f/w 42701)	1
	94-7065	Strainer Screen	
		20 mesh (Std.)	1
	42702	Strainer Screen	
		40 mesh (optional)	1
	42703	Strainer Gasket (f/w 42701)	1
30	42056	Red. Bushing, 1-1/4 x 1-1/2	1
31	93-0848	Centrifugal Pump	1
32	42992	Red. Nipple, 1-1/4 x 1" NPT	1
33	92-0049	Square Key	1
34	323-8	HHCS, 3/8 x 1-1/2"	2
35	328967	Hair Pin Cotter	2
36	42195	Clevis Pin, 1/2 x 2	2
37	92-3782	Pump Mounting Plate	1
38	92-3771	Pump Pivot Plate Assy	1
39	3256-4	Flat Washer, 3/8	2
40	32153-2	Lock Nut, 3/8	3
41	41720	Spring Mounting Angle	1
42	41721	Pump Spring	1
43	325-5	HHCS, 1/2 x 1-1/4"	2
44	32153-5	Lock Nut, 1/2	2
45	328963	Hair Pin Cotter	1
46	42993	Pump Cable	1
47	3256-24	Flat Washer, 3/8 SAE	3
48	323-16	HHCS, 3/8 x 4"	1
49	41142	Pump Belt Cover	1
50	42989	Pump Drive Belt	1
51	20-4840	Belt Cover Clamp	1
52	40198	Pump Pulley	1
53	3256-26	Flat Washer	AR

CENTRIFUGAL PUMP (93-0848)

Ref.	Part No.	Description	Qty.
1	42084	Drain Plug	4
2	93-0922	Pump Casting	1
3	42086	Impeller Nut	1
4	93-0923	Impeller (Polypropylene)	1
5	42089	O-Ring	1
6	42088	Mechanical Seal - Viton	1
*	94-8520	Seal Kit (Incl. Ref. #'s 5 & 6)	AR
7	93-0924	Seal Retainer	1
8	42092	Slinger Ring	1

Ref.	Part No.	Description	Qty.
9	93-0925	Mounting Flange	1
10	323-6	Bolt	4
11	93-0927	Ball Bearing	2
12	93-0928	Key	1
13	93-0929	Pump Shaft	1
14	93-0930	Key	1
15	42093	Bearing Retainer	1
16	93-0931	Gasket	1

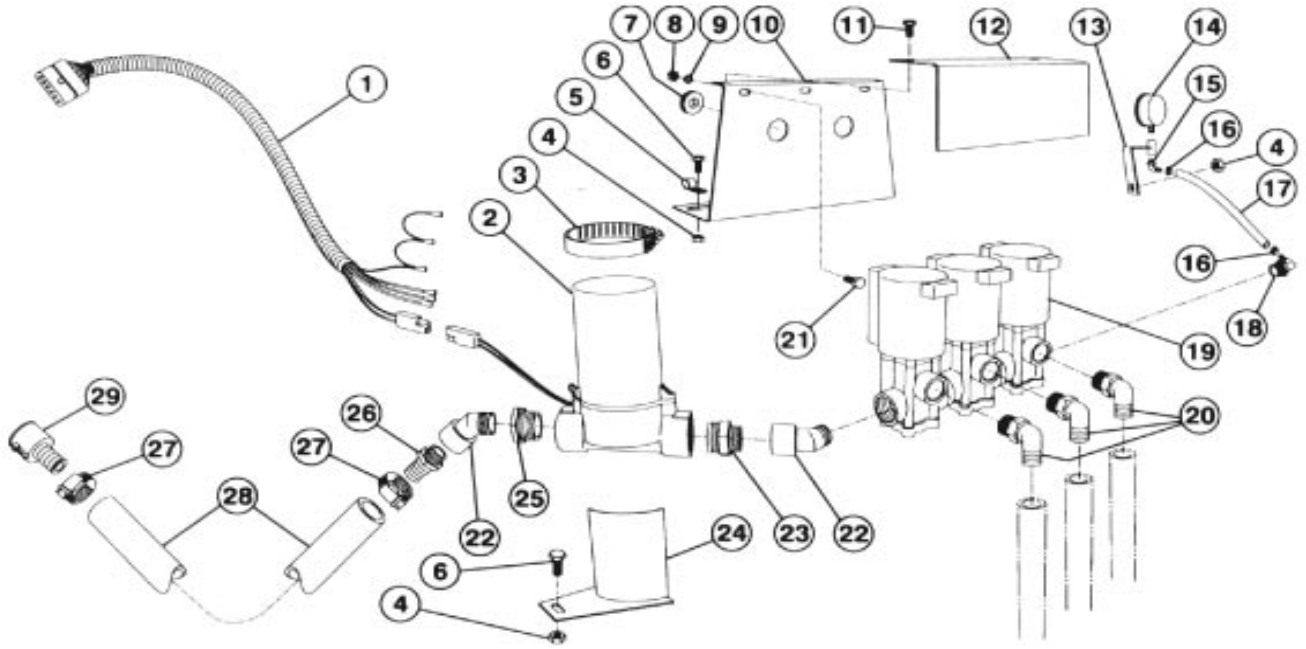

1097

MOTORIZED CONTROL VALVE & SOLENOIDS

Ref.	Part No.	Description	Qty.
1	92-3689	Flow Control Cable (3 ft.)	1
2	41480	Motorized Control Valve	1
3	92-0054	Hose Clamp	1
4	32128-20	Hex Nut, 5/16	5
5	41230	R-Clamp	1
6	3234-5	HHCS, 5/16 x 3/4"	4
7	42811	Grommet	2
8	43-2830	Hex Nut, M6	3
9	48-8020	Lockwasher, M6	3
10	95-9238	Solenoid Mounting Bracket	1
11	3234-26	HWHCS, 1/4 x 3/8”	2
12	95-9240	Solenoid Valve Shield	1
13	42277	Gauge Brkt Assy	1
14	40485	Pressure Gauge	1
15	41292	90° Elbow, 1/4 x 3/8 H.B.	1

Ref.	Part No.	Description	Qty.
16	96609	Hose Clamp, 3/8 Hose	2
17	42276	Gauge Hose, 3/8 ID x 36"	1
18	41295	90° Elbow, 3/4" x 3/8" H.B.	1
19	95-9236	Solenoid Valve Assy. (Trpl)	1
	95-9237	Single Solenoid	AR
20	92-8557	Hose Barb, 90° 1/2 x 3/4 HB	3
21	48-7620	HHCS, M6 x 16mm	3
22	42939	45° St. Elbow, 3/4"	2
23	41309	Red. Nipple, 1" x 3/4"	1
24	42999	Valve Bracket Assembly	1
25	43001	Red. Bushing, 1" x 3/4"	1
26	41730	Hose Barb, 3/4" x 1" H. B.	1
27	21146	Hose Clamp	2
28	42998	Flow Meter Hose, 1" x 24"	1
29	40480	Quick Coupler x 1" HB	1

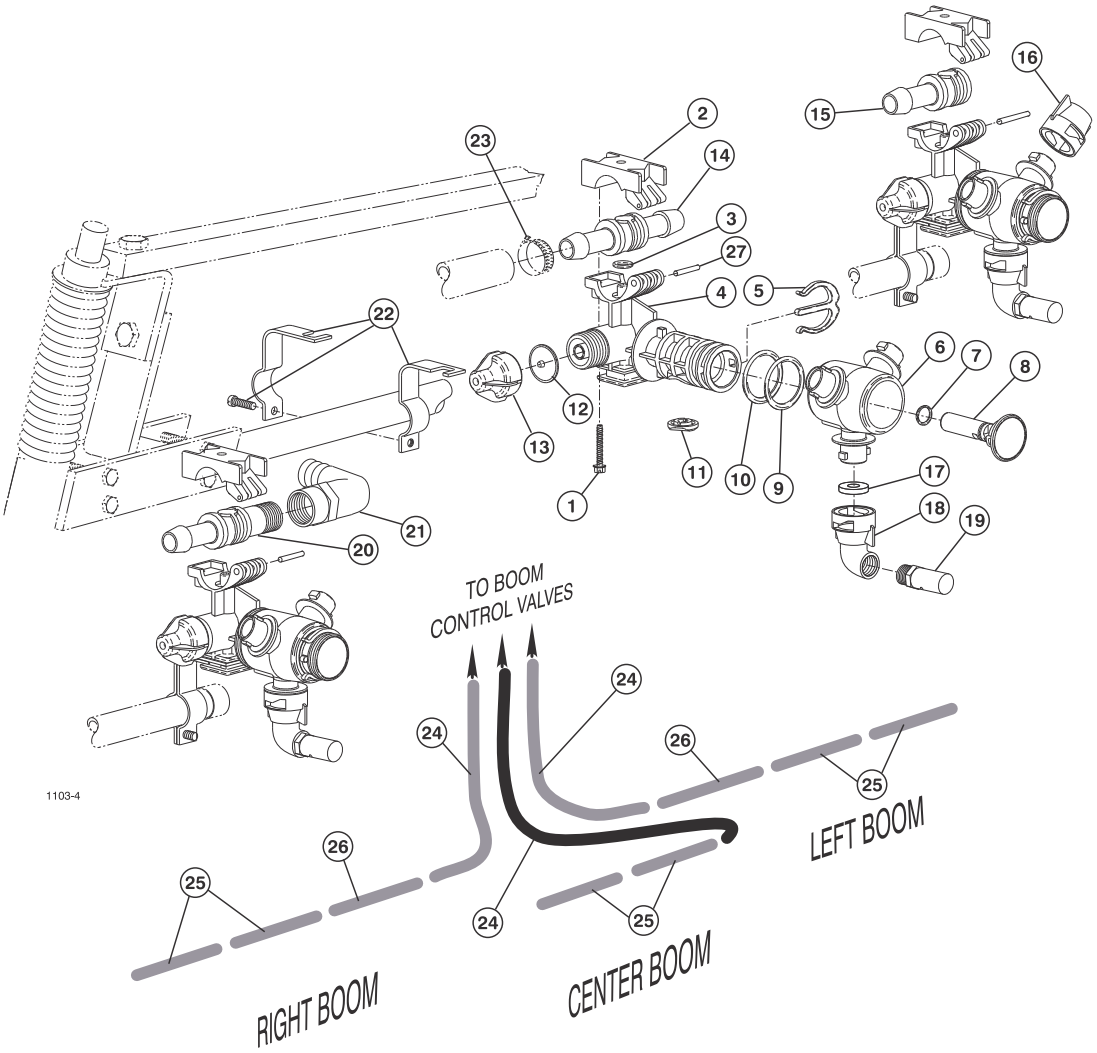

TURRET BODIES & BOOM HOSES

Ref	Part No.	Description	Qty
*	95-9183	Turret Body - Double Barb (Incl. Ref. #'s 1-14)	7
*	95-9181	Turret Body - Single Barb (Incl. Ref. #'s 1-13 & 15)	3
*	95-9184	Turret Body - Barb x 1/2 NPT (Incl. Ref. #'s 1-13 & 20)	1
1	99-0811	Screw	1
2	99-0812	Upper Clamp	1
†3	95-9191	O-Ring	1
4	95-9192	Split-Eyelet Body	1
5	95-9197	E-Clip	1
6	95-9196	Turret	1
†7	95-9198	O-Ring	1
8	95-9200	Plug	1
†9	95-9199	O-Ring	1
†10	99-0815	O-Ring Dust Seal	1
†11	99-0813	Seal	1
†12	41003	Diaphragm	1
13	95-9193	End Cap Assembly	1
14	95-9202	Double Hose Barb	1

Ref	Part No.	Description	Qty
15	95-9201	Single Hose Barb	1
16	95-9187	Nozzle Dust Cap (Incl. Ref. # 16)	22
17	40998	Seat Gasket	33
18	95-9186	Nozzle Cap, 90° (Incl. Ref. # 16)	11
19	95-9188	TTJ10 Turbo TurfJet (Std.)	11
	95-9221	TTJ2 Turbo TurfJet (Optional)	11
	95-9222	TTJ4 Turbo TurfJet (Optional)	11
	95-9223	TTJ5 Turbo TurfJet (Optional)	11
	95-9224	TTJ6 Turbo TurfJet (Optional)	11
	95-9225	TTJ8 Turbo TurfJet (Optional)	11
	95-9226	TTJ15 Turbo TurfJet (Optional)	11
20	95-9203	Hose Barb x 1/2" NPT	1
21	95-9314	90° Elbow, 1/2" FPT x 3/4" H.B.	1
22	95-9185	Turret Body Clamp	11
23	92-0045	Hose Clamp, 3/4" Hose	22
24	41340	Boom Hose, 3/4" x 50"	3
25	40506	Jumper Hose, 3/4 x 19"	6
26	95-2229	Jumper Hose, 3/4 x 21"	2
27	99-0814	Pivot Pin, 303 S.S.	1

* Not Illustrated

† Denotes parts in Seal Kit # 99-0816

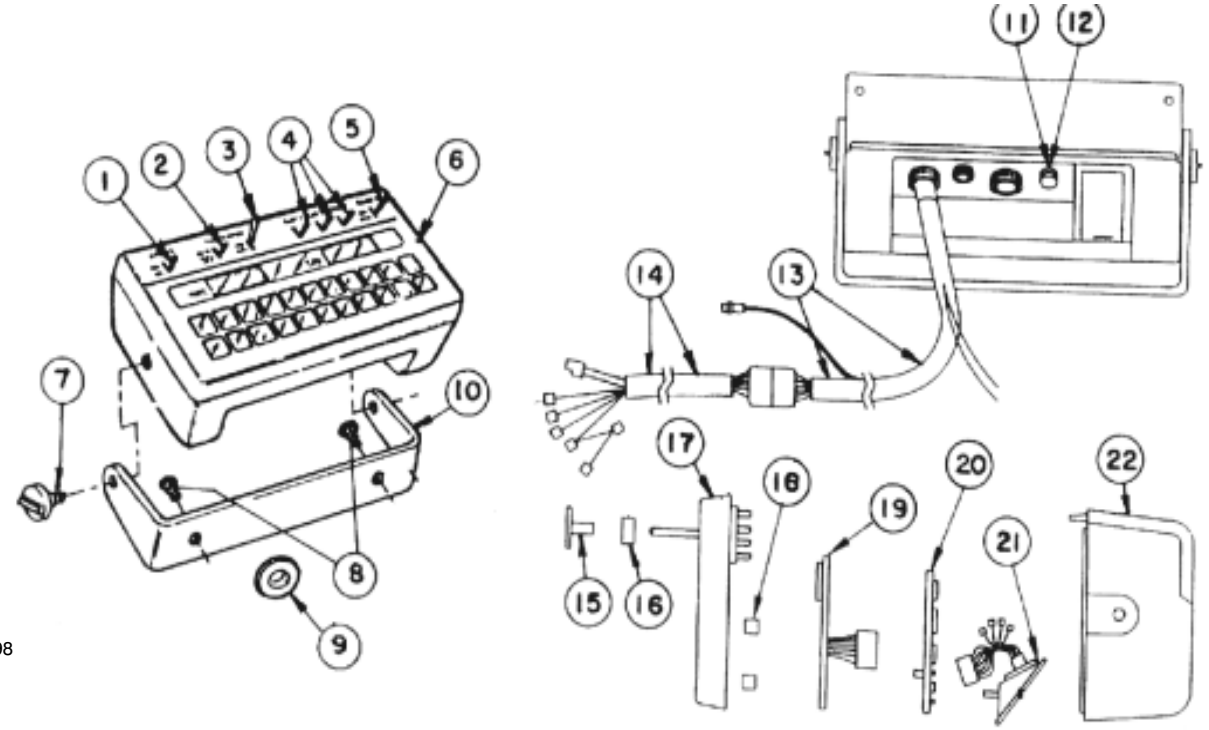

1098

Pro Control™ Console (3000)

Ref.	Part No.	Description	Qty.
1	42722	Power Switch	1
2	42723	Rate 1/ Rate 2 Man. Swtch	1
3	42724	Man. Adj. Switch	1
4	42558	Boom Switch	3
5	42725	Master Switch	1
6	41472	Control Console	1
	41344	Console Cover	1
7	41473	Mounting Knob	2
8	3274-69	Flange Bt. Hd. Screw, 1/4 x 3/4	2
9	40764	Grommet	1
10	41474	Mounting Bracket	1
11	42715	Fuse Holder	1

Ref.	Part No.	Description	Qty.
12		Fuse, AGC 15	1
13	92-3687	Console Control Cable (13 ft.)	1
14	92-3689	Flow Control Cable (3 ft.)	1
15	93-0907	Switch Cover	1
16	93-0908	1-Set Filler Spacers	1
17	93-0909	Face Plate Assy	1
18	93-0910	Display Board Spacer	1
19	93-0911	LCD Display Board	1
20	93-0912	Processor Board	1
21	93-0913	Connector Plate Assy	1
22	93-0914	Back Assy	1

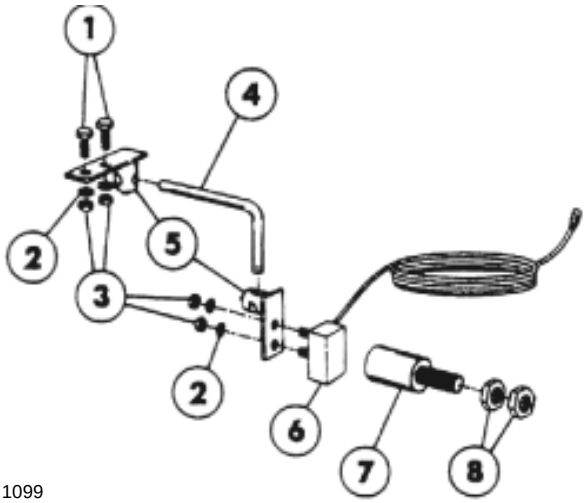

1099

SPEED SENSOR

Ref.	Part No.	Description	Qty.
1	321-6	HHCS, 1/4 x 1	2
2	3253-3	Lockwasher, 1/4	4
3	3217-5	Hex Nut, 1/4	4
4	41479	Sensor Rod	1
5	41478	Turret Assembly	2
6	41477	Sensor Switch Assembly	1
7	41475	Magnet Assembly (Red)	2
	41476	Magnet Assembly (Black)	2
8	3217-9	Hex Nut, 1/2	8

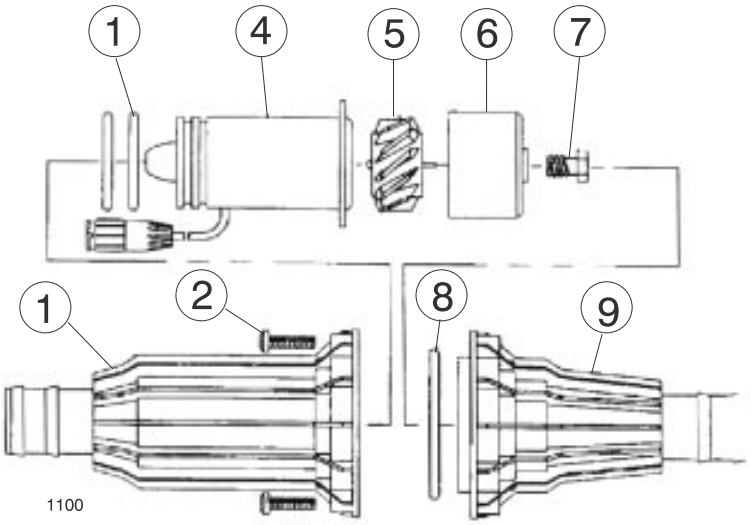

1100

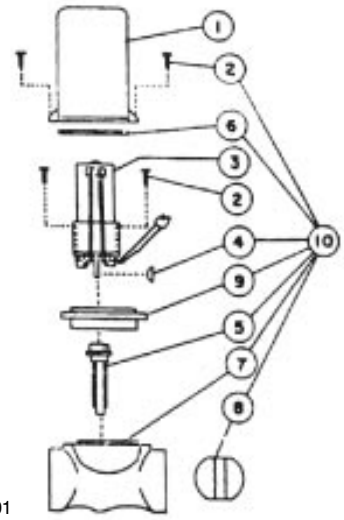

1101

FLOW METER

Ref.	Part No.	Description	Qty.
1	42475	Sensor Housing	1
2	42476	S.S. Screw, #10 x 3/4"	12
3	93-1098*	O-Ring (Viton)	2
4	42477	Dual O-Ring Transducer Assy	1
5	42478	Turbine	1
6	42479	Turbine Hub/Bearing Ass'y	1
7	42480	Turbine Stud Assembly	1
8	42469	O-Ring (Viton)	1
9	42481	Hub Housing w/Inserts	1
10	41483	Mounting Bracket (not shown)	1

* Included with Transducer, Part No. 42477

CONTROL VALVE

Ref.	Part No.	Description	Qty.
1	42318	Valve Cover	1
2	42482	Screw, #6 x 3/4"	6
3	42483	Motor Assy	1
4	42484	Woodruff Key	1
5	42485	Coupler Shaft	1
6	42470	Seal (Tetraseal)	1
7		Valve Body	NS
8	42486	Butterfly	1
9	42487	Isolation Flange Assy	1
10	42488	Valve - Iso-Body Kit	1

SOLENOID VALVE

Ref.	Part No.	Description	Qty.
1	95-9317	Coil Ass'y - Nylon Encapsulated	1
2	92-0364	Upper Diaphragm Housing (blk)	1
3	95-9318	Armature - Type 430FR S.S.	1
4	***	Spring - Type 302 S.S.	1
5	95-9319	Retaining Ring - Steel, Plated	1
6	***	Diaphragm - Viton	2
7	92-3681	Seat Washer Retainer - S.S.	1
8	***	Seat Washer - Viton	1
9	42136	Spacer - Stainless Steel	1
10	42137	Body - Polypropylene (black)	1
11	92-3682	Stem - Stainless Steel	1
12	42134	Washer - Stainless Steel	1
13	92-0367	Lower Diaphragm Piston - S.S.	1
14	92-0368	Lower Diaphragm Housing (blk)	1
15	42143	Screw - Stainless Steel	4
16	42884	Connecting Nipple - (black)	AR

*** Indicates parts included in Viton Seal Kit.
Order Part No. 95-9316.

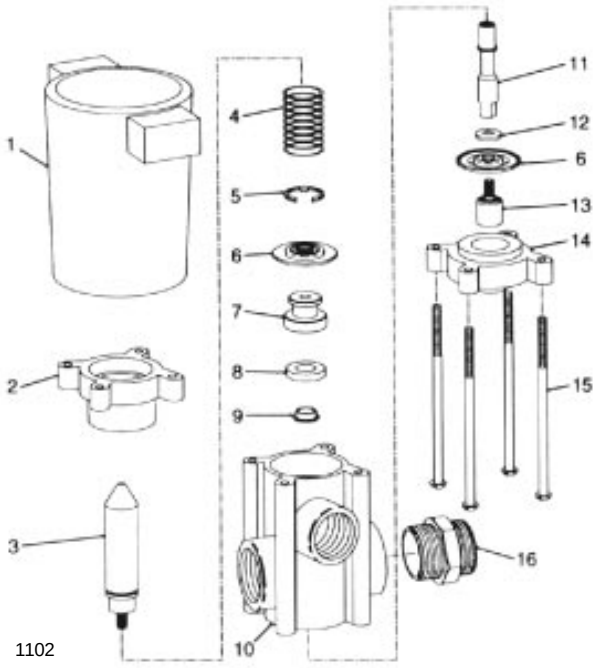

1102



Helping you put quality into play.®