Form No. 3375-406 Rev B

TORO®

Count on it.

Parts Catalog

MH-400SH2 Material Handler

Model No. 44931—Serial No. 313000001 and Up

Register at www.Toro.com.
Original Instructions (EN)

3375-406 B

Ordering Replacement Parts

To order replacement parts, please supply the part number, the quantity, and the description of each part desired.

Understanding Reference Numbers

Each identified part in an illustration has a reference number. The reference number for a part also appears in the parts list, along with other information about the part.

This catalog uses two special reference number formats, one to indicate parts in a service assembly and another to indicate the quantity of a given part in an illustration.

Service Assembly Reference Numbers

Parts in service assemblies have reference numbers in the form a:b. The a represents the reference number of the entire service assembly and the b represents a sequential number unique to each part within the service assembly.

For example, a wheel assembly might be identified by reference number 6, the tire by 6:1, the valve by 6:2, and the wheel by 6:3. When you order the assembly identified by reference number 6, you receive all parts identified by reference numbers 6:1,6:2, and 6:3. However, you may also order any part individually. Reference numbers of this type appear in illustration and in parts lists.

Reference Numbers Indicating Quantity

In an illustration, if a reference number indicates more than one part, the reference number has the form nX y. The n represents the quantity of the part, the X is the multiplication symbol, and the y represents the reference number.

For example, in an illustration, the reference number 2X 37 means that two of the parts identified by reference number 37 are indicated.

Contents

Box Frame Assembly 4
Box Frame Decal Assembly No. 120-0890 5
Attachment Clamp Assembly No. T36015800 6
Guard Assembly 7
Hitch Assembly 8
Belt and Skirting Assembly 9
Skirting Assembly 10
Conveyor Assembly 11
Chain Drive Assembly 12
Wheel Assembly 13
RH Shaft Assembly No. 120-9401 14
LH Brake Assembly No. 120-9437 15
Hub Assembly No. 120-9404 16
LH Shaft Assembly No. 120-9402 17
RH Brake Assembly No. 120-9436 18
Hydraulic Valve and Manifold Assembly 19
Hydraulic Valve Assembly No. 120-0850 21
Hydraulic Hose and Clamp Assembly 22
Hydraulic Cylinder and Junction Box Manifold Assembly 23
Hydraulic Hose Assembly 24
Hydraulic Guard Box Assembly 25
Hydraulic Motor Assembly No. T0000-5303 26
Electrical Assembly 27
Brake Assembly 28

© 2024—The Toro® Company
8111 Lyndale Avenue South
Bloomington, MN 55420

Contact us at www.Toro.com.
Printed in the USA.
All Rights Reserved

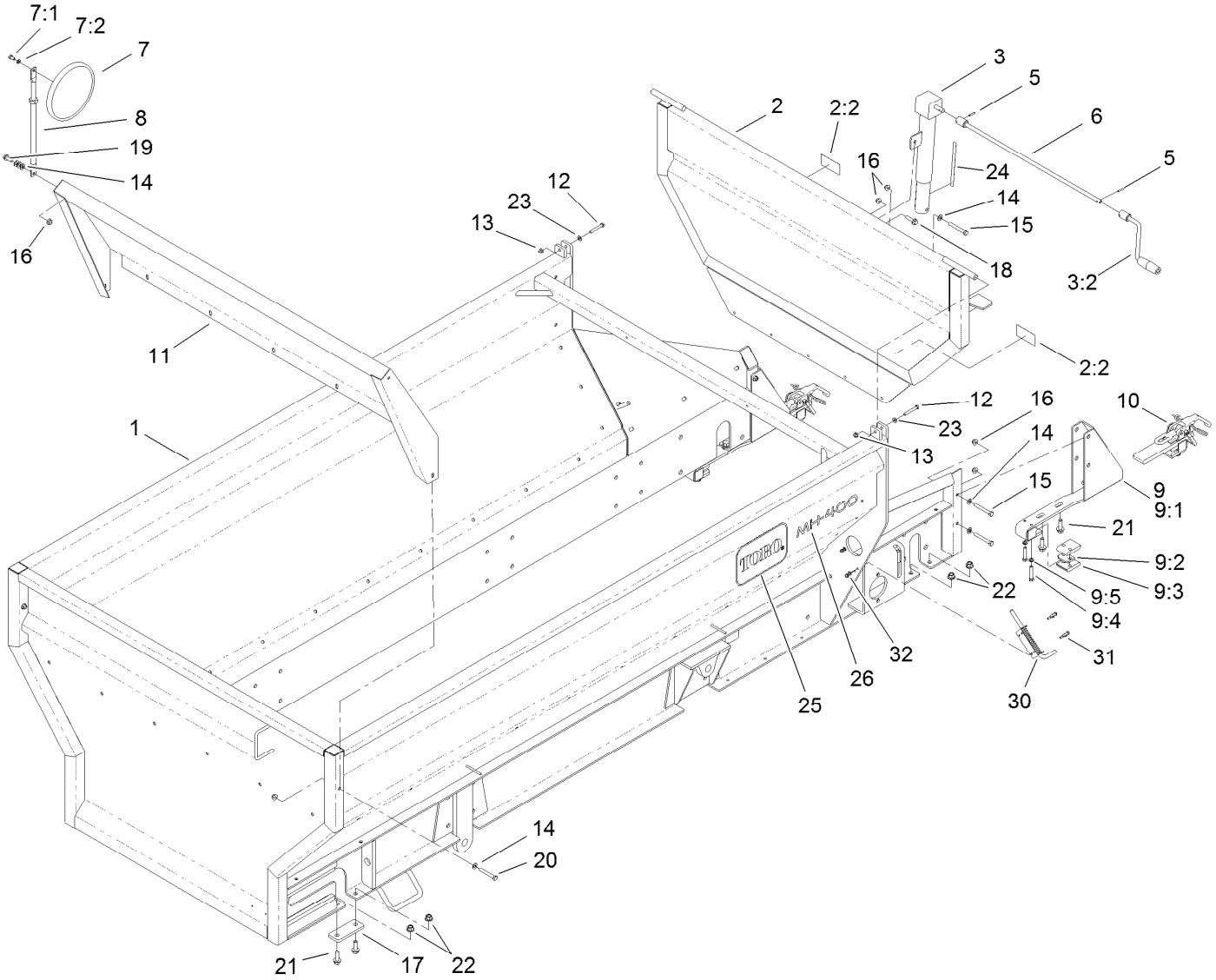

Box Frame Assembly

Ref.	Part Number	Qty.	Description
1	120-0890	1	Box Frame ASM
2	120-0891	1	Tailgate ASM
2:2	119-6838	2	Decal-Warning, Conveyor
3	T36031200	1	Tailgate Jack ASM
3:2	T36031210	1	Handle-Crank
5	32121-45	2	Pin-Spring
6	T36011220-01	1	Crank-Jack
7	92-2678	1	Convex Mirror ASM
7:1	322-2	1	Screw-HH
7:2	3253-4	1	Washer-Lock
8	T36011560	1	Arm-Mirror
9	T36015790	2	Attachment Bracket ASM
9:1	119-6872-01	1	Bracket-Attachment
9:2	T01-13489B	1	Tab-Spacer
9:3	T36015200	2	Bar-Bearing
9:4	323-10	2	Screw-HH
9:5	3253-21	2	Washer-Lock
10	T36015800	2	Attachment Clamp ASM
11	T36011550-01	1	Panel-Sloped

Ref.	Part Number	Qty.	Description
12	322-11	2	Screw-HH
13	104-8300	2	Nut-HF, NI
14	3256-24	10	Washer-Plain
15	323-14	5	Screw-HH
16	104-8301	14	Nut-HF, NI
17	T36011650	2	Bar-Bridge
18	114-4681	1	Screw-HHF
19	3234-42	6	Screw-HHF
20	323-13	2	Screw-HH
21	100-6116	8	Screw-HHF
22	99-5107	8	Nut-Lock
23	3256-23	2	Washer-Plain
24	119-6869	1	Decal-Adjustment, Tailgate
25	66-6140	3	Decal
26	119-6802	3	Decal
30	T62021030	2	Latch-Spring
31	321-6	8	Screw-HH
32	104-7201	8	Nut-HF, NI

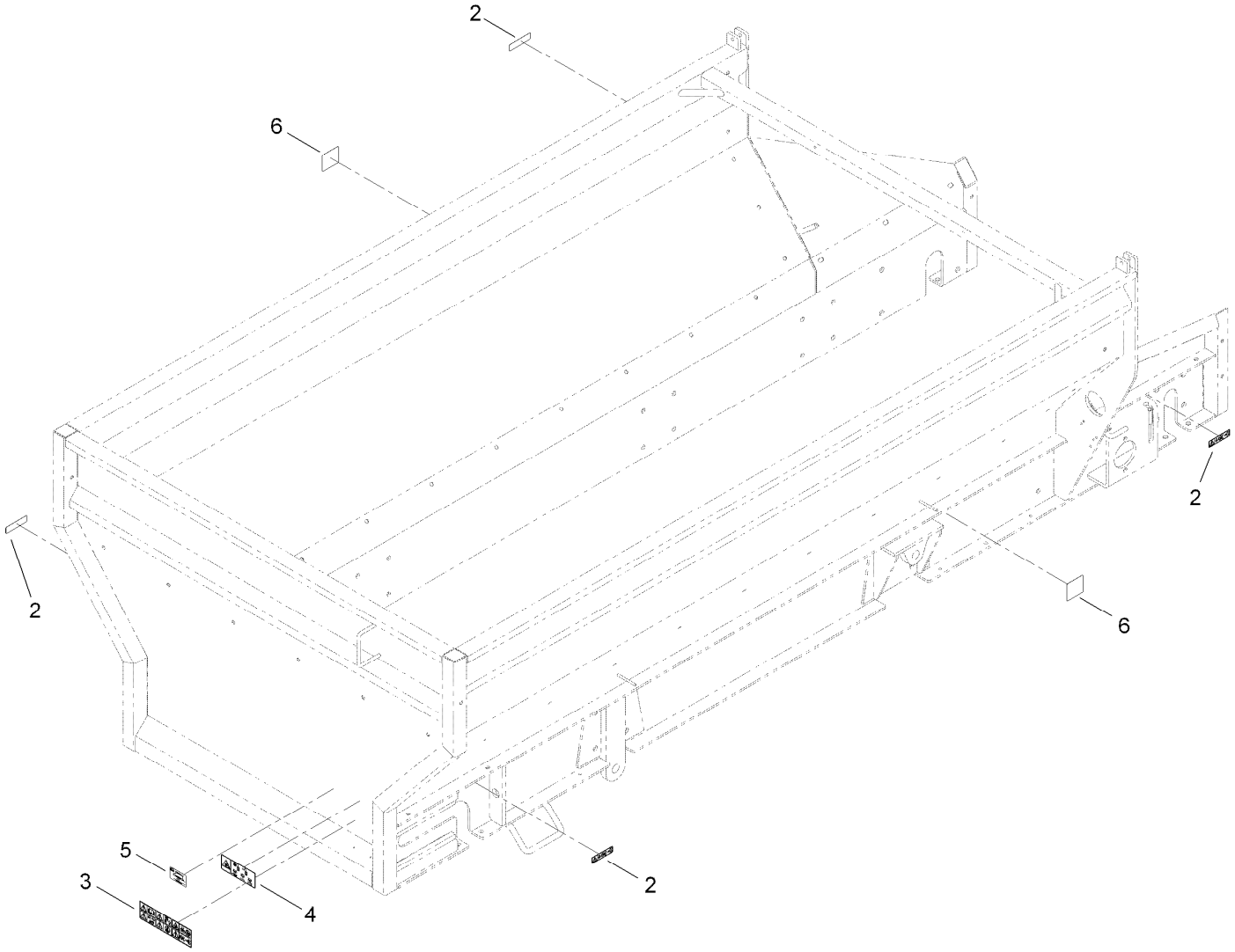

Box Frame Decal Assembly No. 120-0890

Ref.	*Part Number*	*Qty.*	*Description*
2	119-0217	4	Decal-Danger
3	119-6806	1	Decal-Danger
4	119-6812	1	Decal-Warning, Tipping Hazard
5	119-6833	1	Decal-Max Load
6	93-9899	2	Decal-Warning

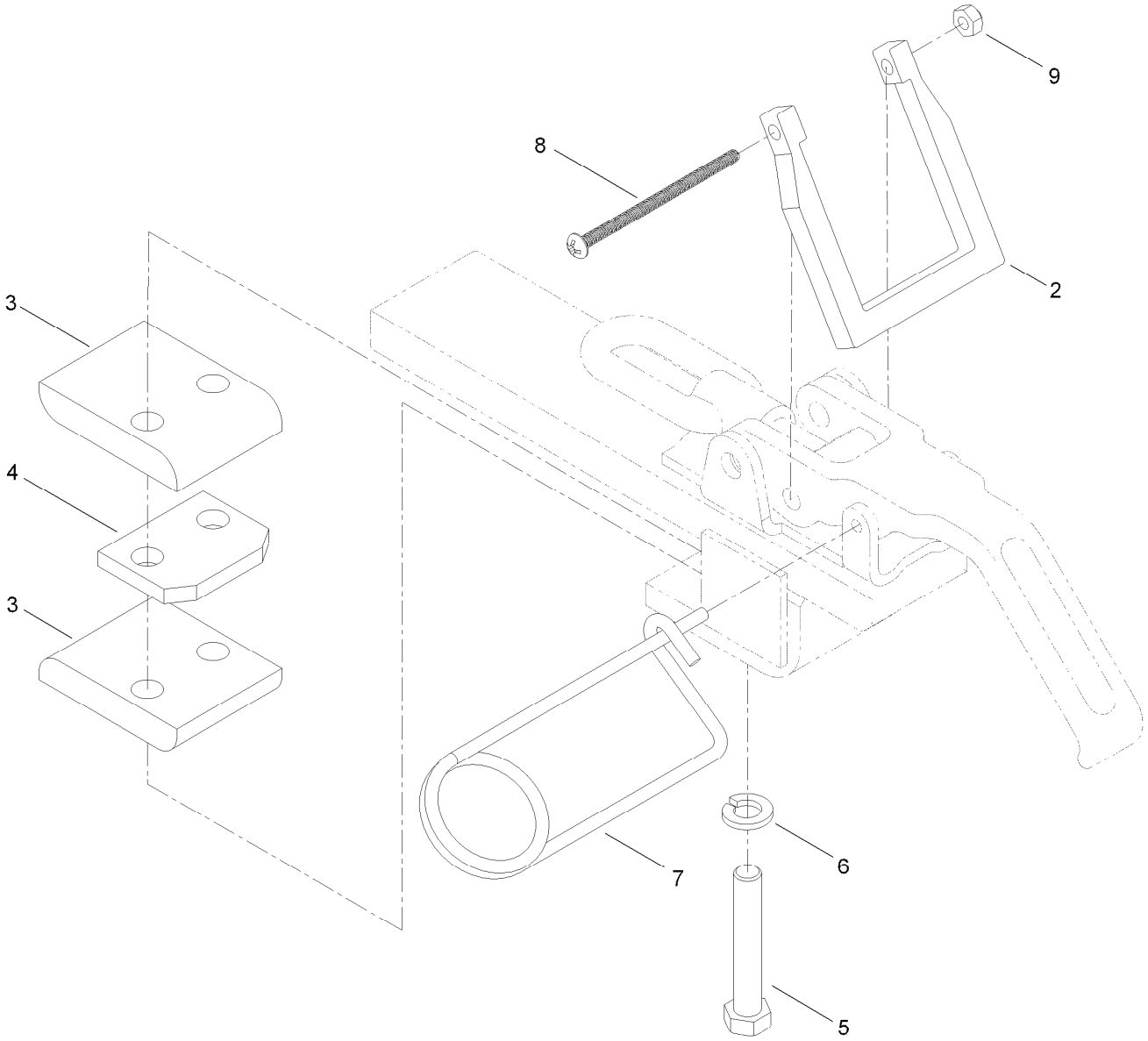

Attachment Clamp Assembly No. T36015800

Ref.	*Part Number*	*Qty.*	*Description*
2	T36015794	1	Lock-Clamp, Attachment
3	T36015200	2	Bar-Bearing
4	T01-13489B	1	Tab-Spacer
5	323-11	2	Screw-HH
6	3253-21	2	Washer-Lock
7	T0000-3247	1	Pin-Lock
8	120-0884	1	Screw-PRH
9	3296-2	1	Nut-Lock, NI

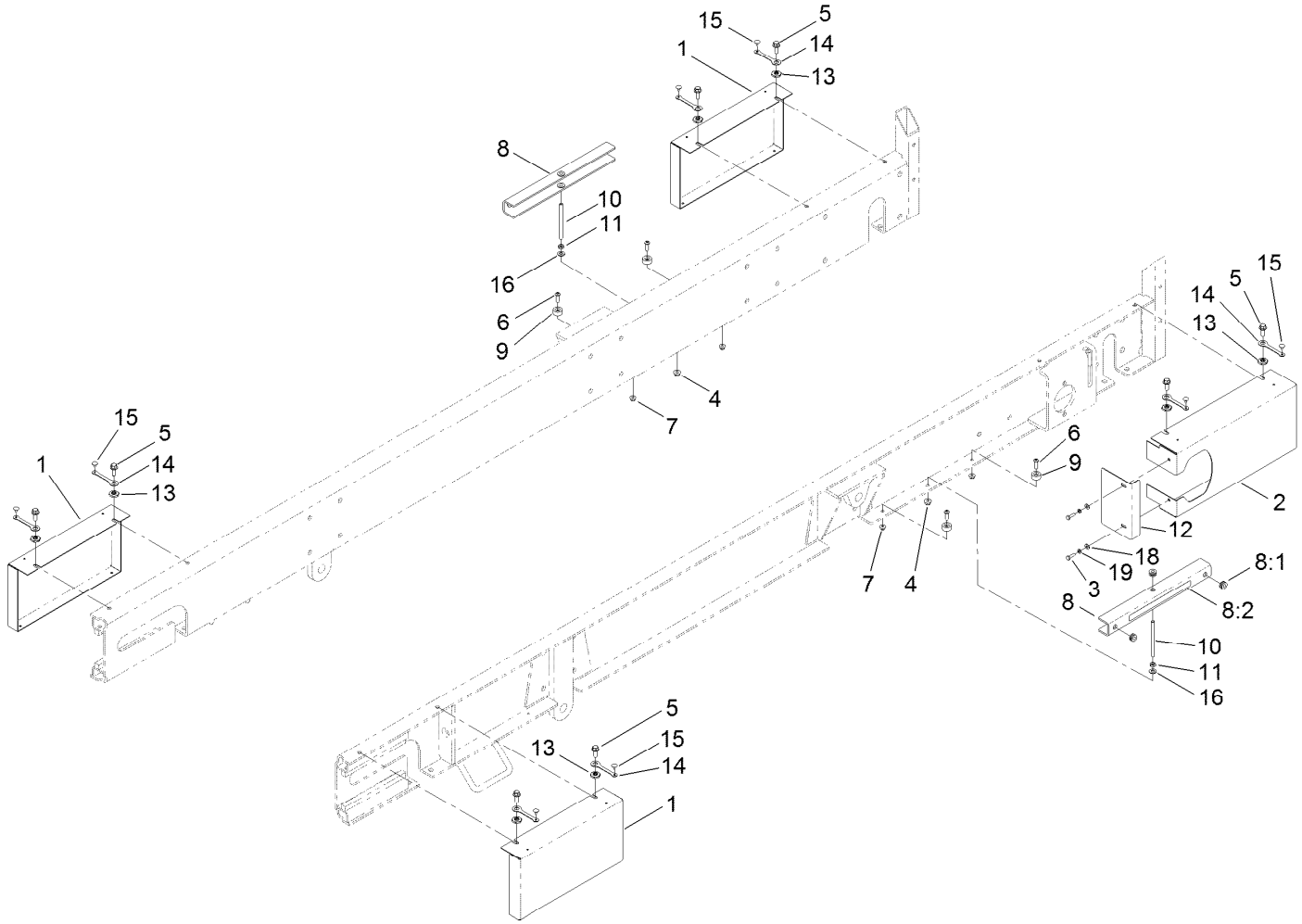

Guard Assembly

Ref.	Part Number	Qty.	Description
1	T36011630-03	3	Guard-Idler
2	T36011640-03	1	Guard-Drive
3	321-5	2	Screw-HH
4	104-8301	2	Nut-HF, NI
5	3234-42	8	Screw-HHF
6	3274-104	4	Screw-HSBH
7	104-8300	4	Nut-HF, NI
8	T36011580	2	Lift Cylinder Stop ASM
8:1	92-5972	4	Grommet-Rubber
8:2	93-9852	1	Decal-Warning

Ref.	Part Number	Qty.	Description
9	T0001-3570	4	Spacer-Stop, Lift Cylinder
10	T36011590	2	Pin-Stop, Lift Cylinder
11	3218-3	2	Nut-Jam
12	T0000-5529-03	1	Guard-Motor, Drive
13	117-8347	8	Nut-Shoulder
14	117-8339	8	Lanyard-3 Inch
15	146489	8	Rivet
16	3256-24	2	Washer-Plain
18	3256-22	2	Washer-Flat
19	3253-3	2	Washer-Lock

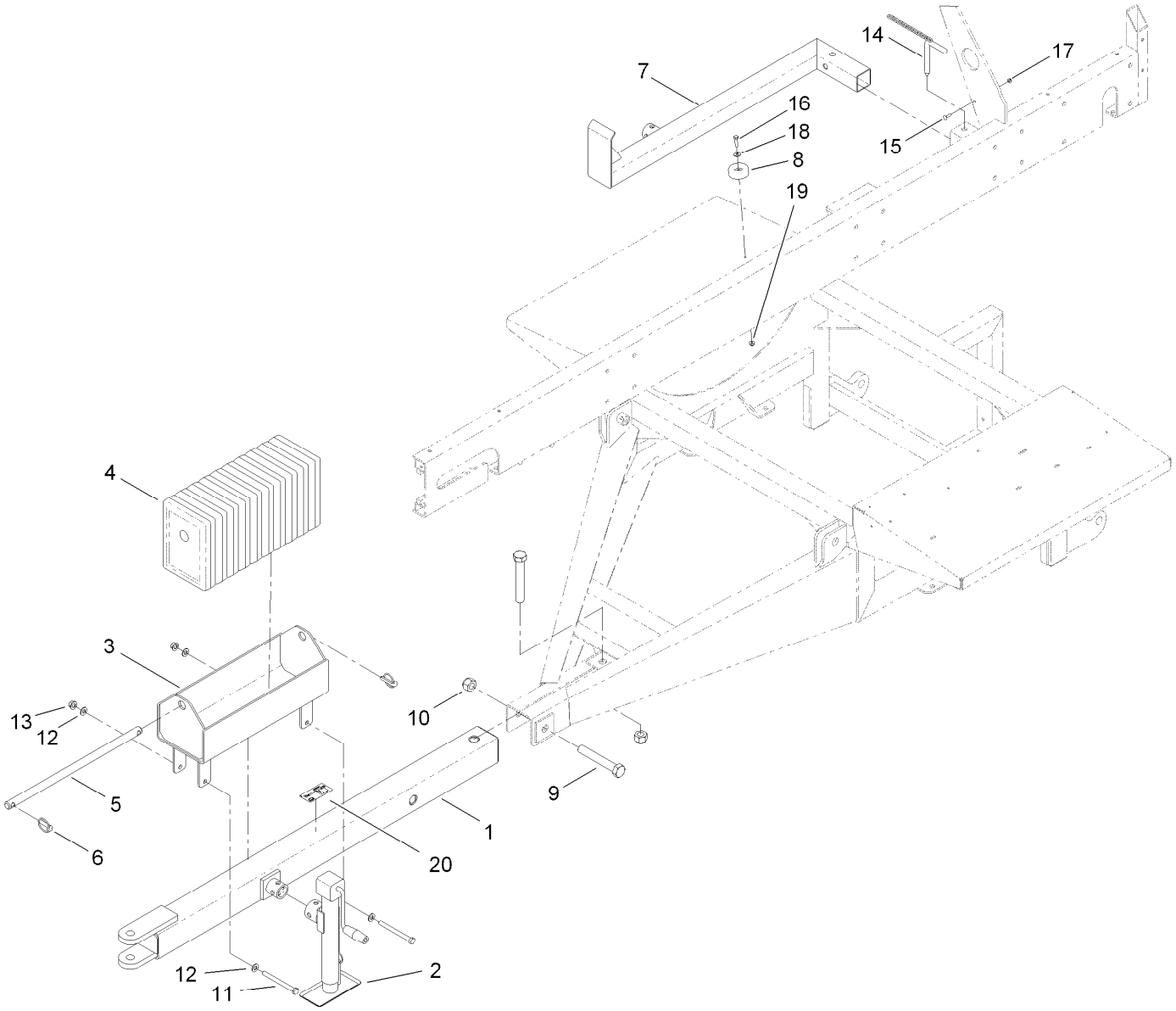

Hitch Assembly

Ref.	Part Number	Qty.	Description
1	T36012112-01	1	Tube-Hitch
2	T0000-3423	1	Jack-Sidewind
3	T36028000-01	1	Box-Weight
4	119-6860-01	10	Casting-Counterweight
5	T36028010-01	1	Shaft-Weight Box
6	283-71	2	Pin-Lynch
7	T36011190-01	1	Leg-Jack
8	108-1605	1	Bumper-Recess
9	120-0887	2	Screw-HH
10	120-0888	2	Nut-HH

Ref.	Part Number	Qty.	Description
11	325-22	2	Screw-HH
12	3256-26	4	Washer-Flat
13	99-5107	2	Nut-Lock
14	T36011195	1	Pin
15	3229-2	1	Screw-CARR
16	322-6	1	Screw-HH
17	104-7201	1	Nut-HF, NI
18	3256-3	1	Washer-Flat
19	104-8300	1	Nut-HF, NI
20	119-6836	1	Decal-Weight Case

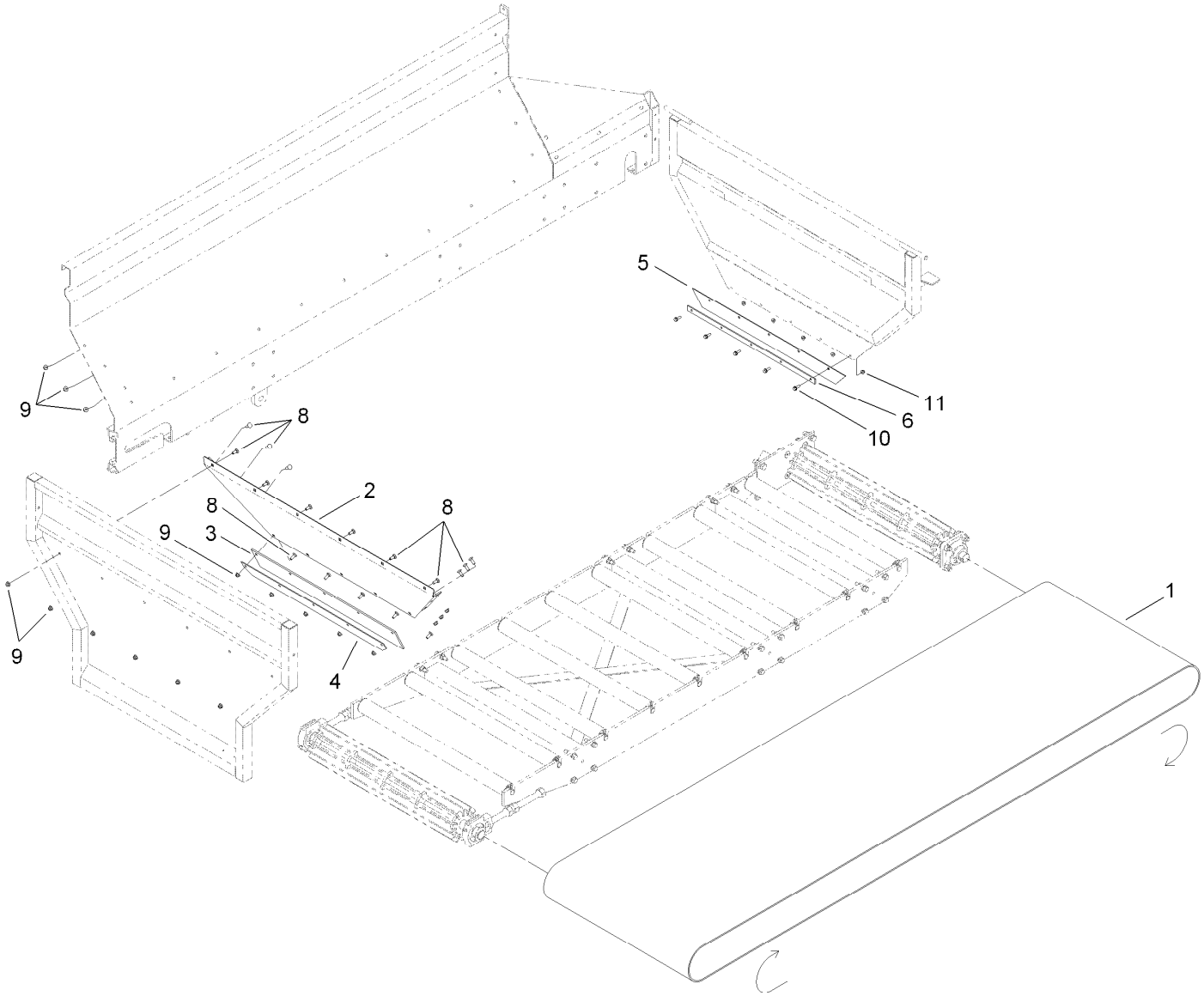

Belt and Skirting Assembly

Ref.	*Part Number*	*Qty.*	*Description*
1	T60191215	1	Belt-Endless
2	T36011525-01	1	Panel-Sloped
3	T01-22002B	1	Skirt-Front Seal, Rubber
4	T36011535-01	1	Bar-Front Seal
5	T36013010	1	Seal-Belt
6	T36011230-01	1	Seal-Retainer, Belt
8	3231-22	17	Screw-CARR
9	104-8301	17	Nut-HF, NI
10	3234-29	5	Screw-HHF
11	104-8300	5	Nut-HF, NI

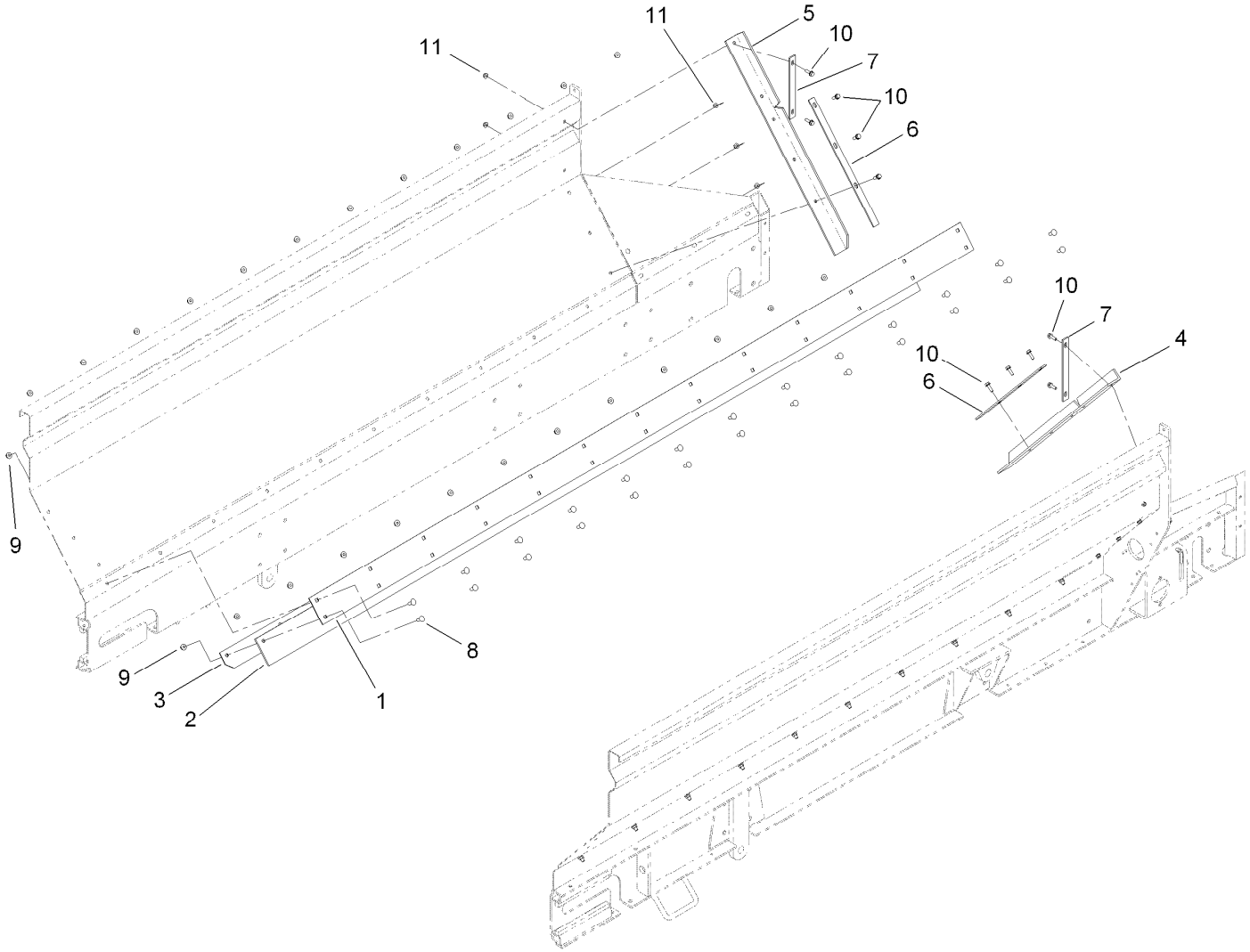

Skirting Assembly

Ref.	Part Number	Qty.	Description
1	T36011520-01	2	Seal-Panel, Side
2	T01-22000B	2	Seal-Rubber, Side
3	T36011530-01	2	Seal-Bar, Side
4	T36011260	1	Seal-Tailgate, LH
5	T36011270	1	Seal-Tailgate, RH
6	T36011280-01	2	Seal-Bar, Lower
7	T36011290-01	2	Seal-Bar, Upper
8	3231-22	52	Screw-CARR
9	104-8301	52	Nut-HF, NI
10	3234-29	10	Screw-HHF
11	104-8300	10	Nut-HF, NI

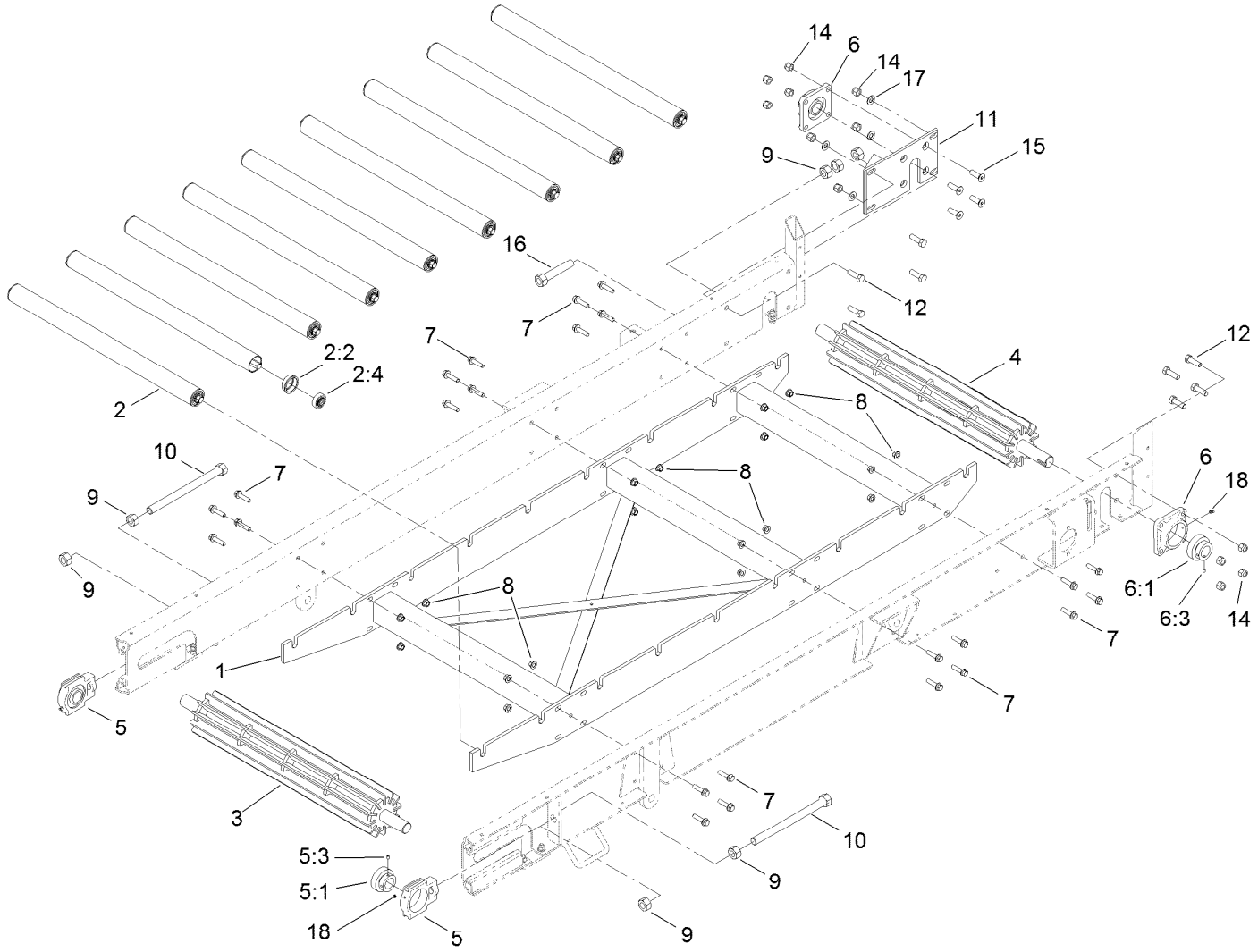

Conveyor Assembly

Ref.	Part Number	Qty.	Description
1	T36011600-01	1	Frame-Roller
2	T36011680	9	Belt Roller ASM
2:2	T36011685	2	Insert-Roller
2:4	T60111000	2	Bearing-Ball
3	T36011620-03	1	Idler Roller ASM
4	119-6892-03	1	Roller-Drive
5	T60114305	2	Take-Up Bearing ASM
5:1	120-0817	1	Bearing-Collar, Lock
5:3	3246-17	1	Setscrew-HSH
6	T60116355	2	4-Bolt Bearing ASM
6:1	120-0817	1	Bearing-Collar, Lock
6:3	3246-17	1	Setscrew-HSH

Ref.	Part Number	Qty.	Description
7	3234-27	24	Screw-HHF
8	99-5107	24	Nut-Lock
9	SG330081	7	Nut-Hex
10	T36011670	2	Rod-Tensioner
11	T36011690-01	1	Plate-Mounting
12	327-6	8	Screw-HH
14	3296-53	12	Nut-Lock, NI
15	120-0904	4	Screw-HSH
16	T36011675	1	Rod-Lock
17	3256-27	4	Washer-Flat
18	302-61	4	Fitting-Grease

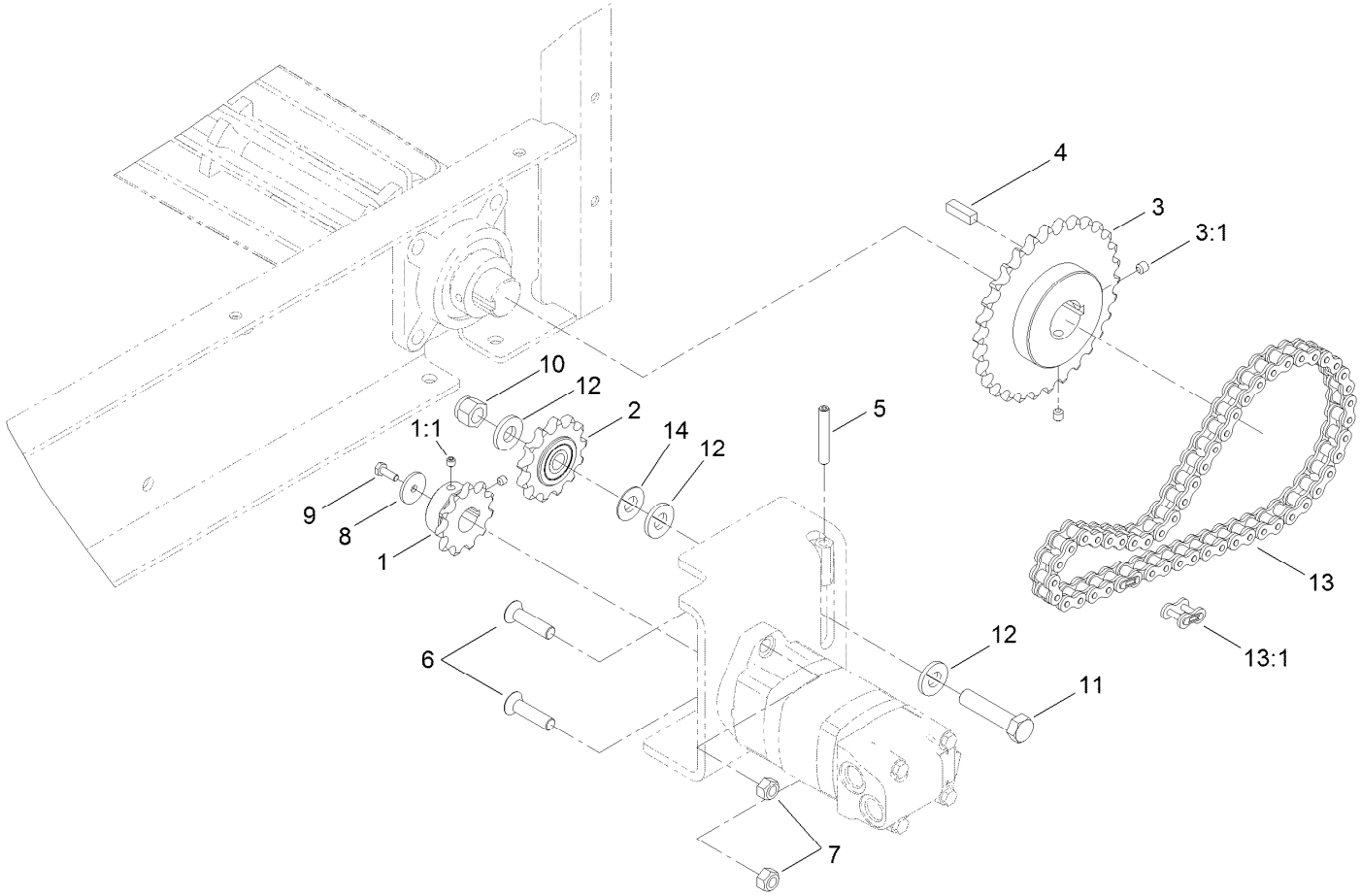

Chain Drive Assembly

Ref.	Part Number	Qty.	Description
1	T60135010	1	Sprocket
1:1	3246-2	2	Screw-Set, HSH
2	T60134090	1	Sprocket
3	T60135750	1	Sprocket
3:1	3247-2	2	Screw-Set, HSH
4	T36011810	1	Key
5	120-0909	1	Screw-HSH
6	120-0898	2	Screw-Fhhs
7	97-1206	2	Locknut

Ref.	Part Number	Qty.	Description
8	103995	1	Washer
9	321-4	1	Screw-HH
10	3296-53	1	Nut-Lock, NI
11	327-8	1	Screw-HH
12	99-7667	3	Washer-Flat
13	T36011800	1	Chain-Drive, 39 Inch
13:1	T60151016	1	Link-Connecting, #60
14	3256-27	1	Washer-Flat

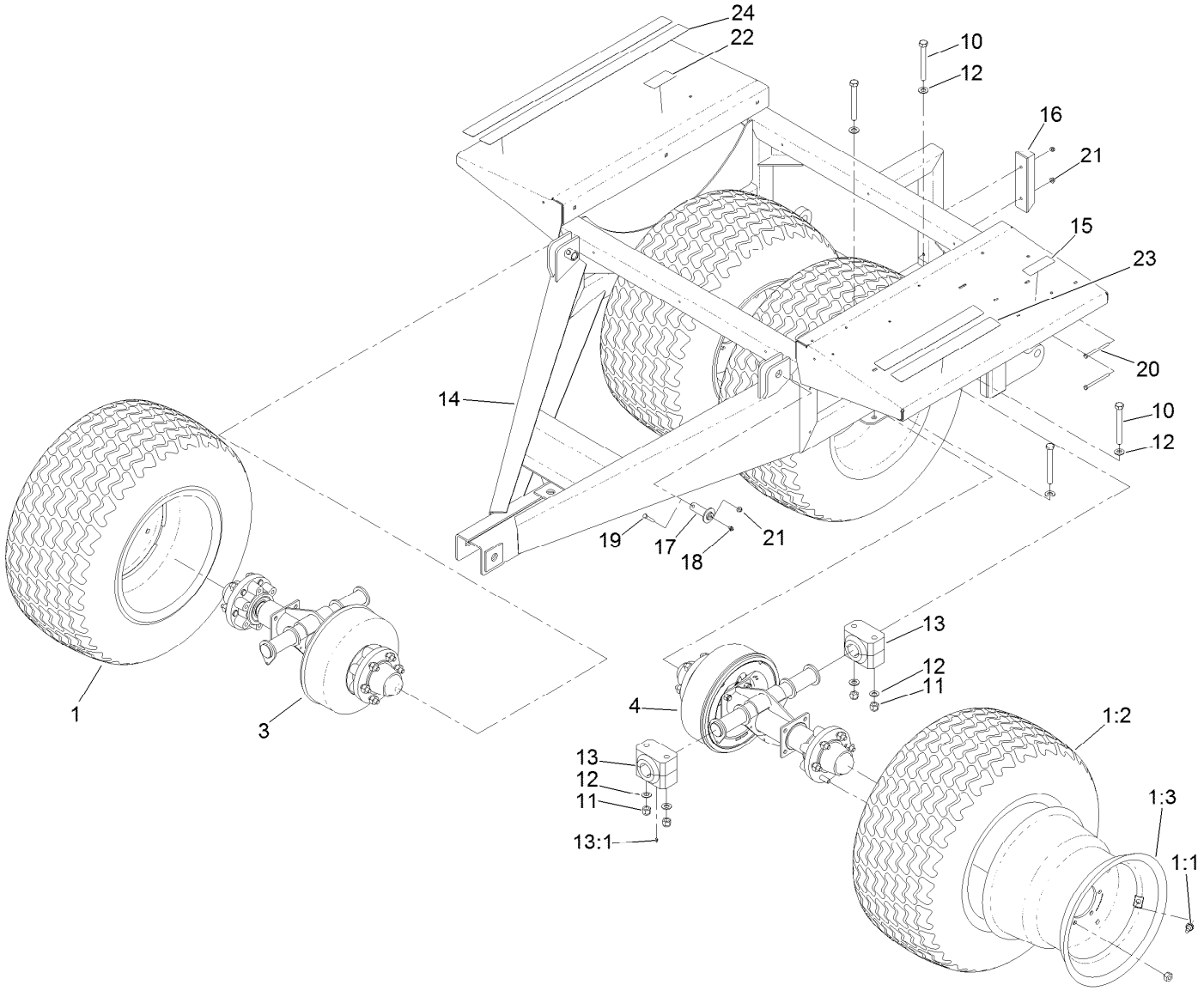

Wheel Assembly

Ref.	Part Number	Qty.	Description
1	T0000-6872	4	Wheel And Tire ASM
1:1	T54011022	1	Wheel-Turf
1:2	T68021100	1	Tire-Turf
1:3	232-24	1	Stem-Valve
3	120-9401	1	RH Shaft ASM
4	120-9402	1	LH Shaft ASM
10	120-0923	8	Screw-HH
11	120-0924	8	Nut-Hex
12	119-1868	16	Washer
13	T60111196	4	Bearing-Polyurethane
13:1	302-19	1	Fitting-Grease

Ref.	Part Number	Qty.	Description
14	T01-43164D-01	1	Frame
15	119-6823	1	Decal-Hydraulic Control
16	T62011021	1	Bumper-Rubber
17	T36012070-01	2	Pin-Hinge
18	302-2	2	Fitting-Grease
19	322-10	2	Screw-HH
20	322-19	2	Screw-HH
21	104-8300	4	Nut-HF, NI
22	119-6835	1	Decal-Jack
23	T36013050	2	Thread-Walk, Safety
24	T36013052	2	Thread-Walk, Safety

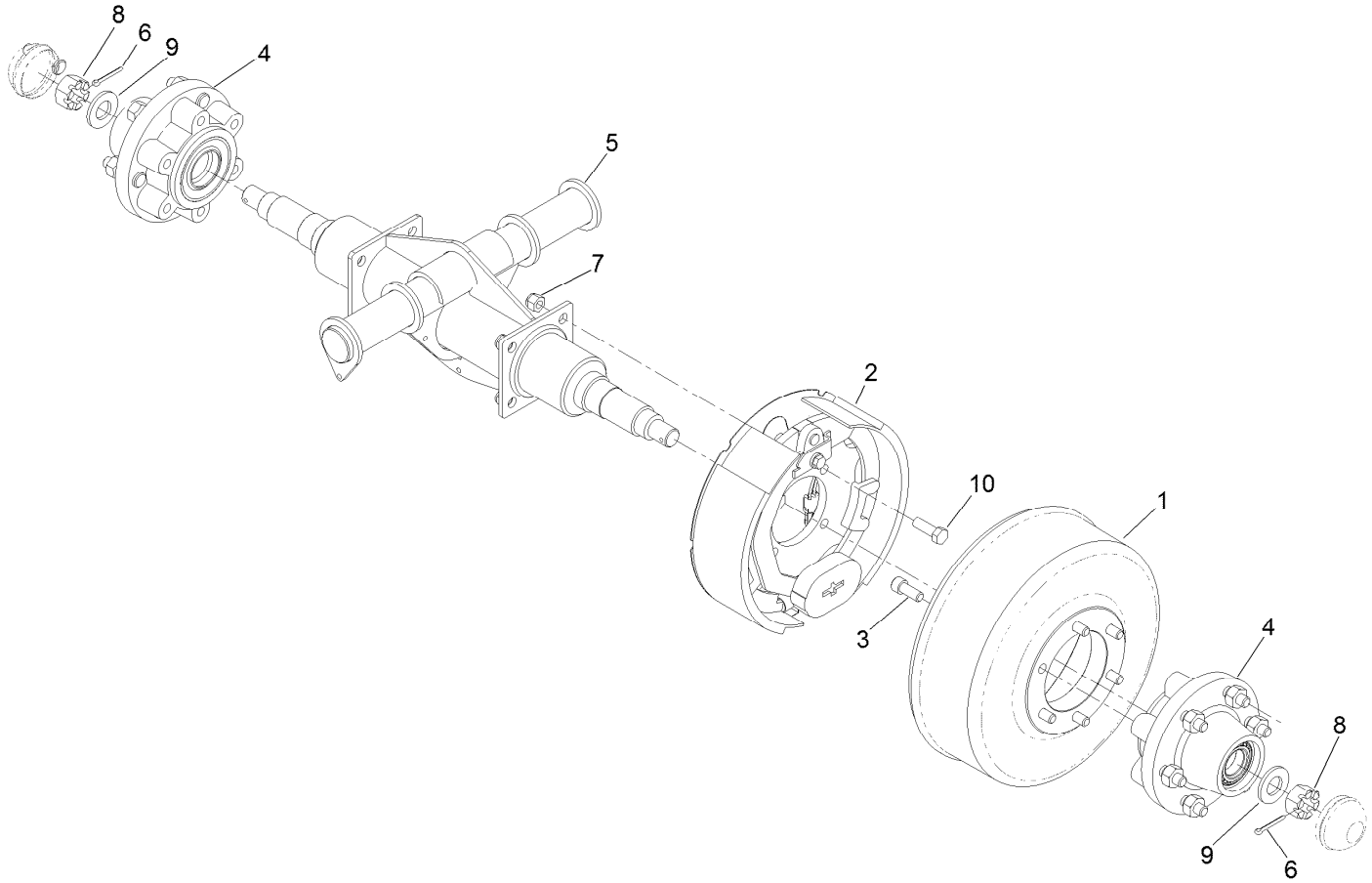

RH Shaft Assembly No. 120-9401

Ref.	*Part Number*	*Qty.*	*Description*
1	119-6871	1	Drum-Brake
2	120-9437	1	LH Brake ASM
3	120-0940	6	Screw-HSH
4	120-9404	2	Hub ASM
5	120-9405-03	1	Beam-Walking
6	3272-23	2	Pin-Cotter
7	3296-19	4	Nut-Hex
8	32136-11	2	Nut-Hex, Slot
9	T54051068	2	Washer-Spindle
10	325-6	4	Screw-HH

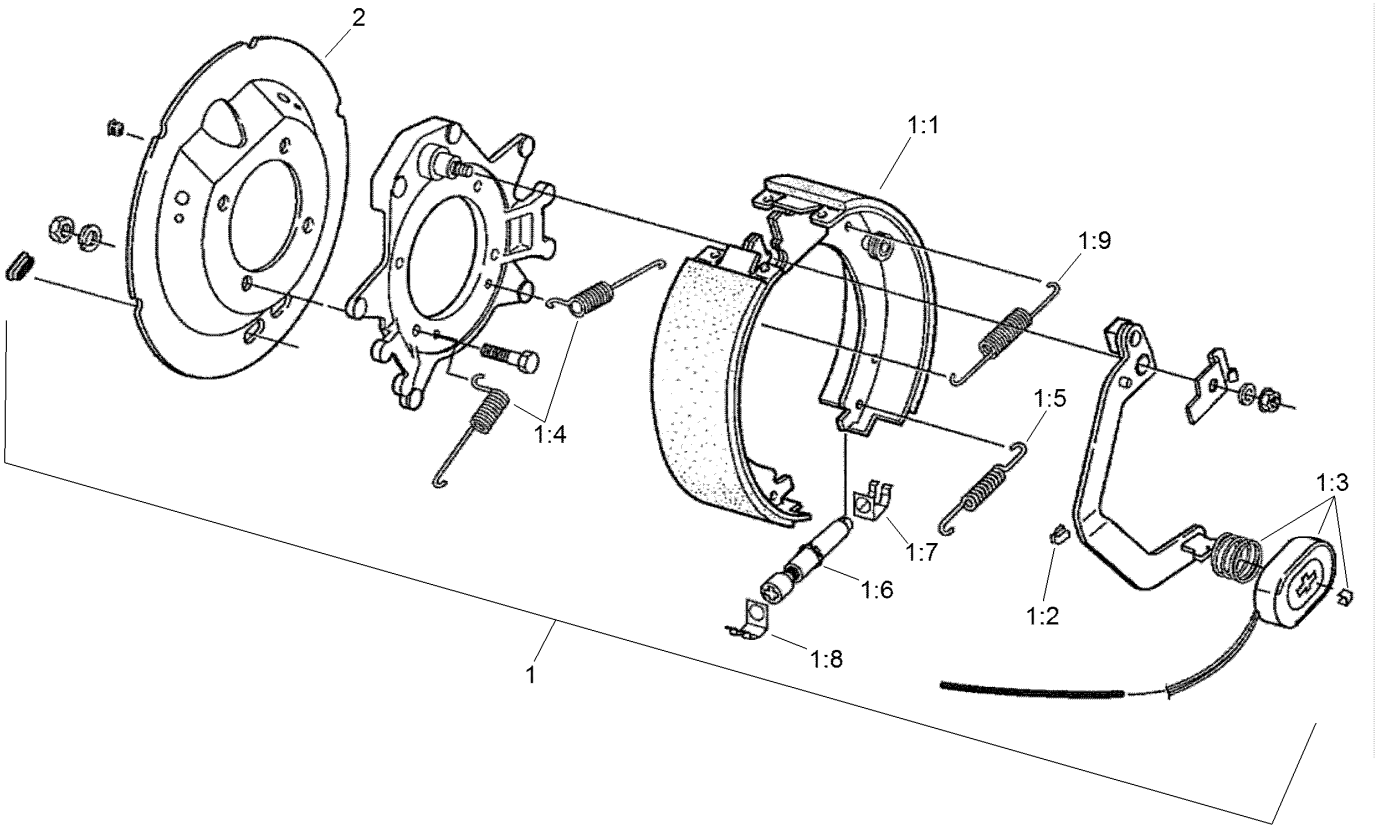

LH Brake Assembly No. 120-9437

Ref.	*Part Number*	*Qty.*	*Description*
1		1	Brake-LH ●
1:1	120-9441	1	LH Shoe And Lining Kit
1:2	120-9443	1	Clip-Wire
1:3	120-9444	1	Magnet Kit
1:4	120-9445	2	Spring-Centering
1:5	120-9446	1	Spring-Adjuster
1:6	120-9447	1	Adjuster Assembly
1:7	120-9448	1	Clip-Adjuster
1:8	120-9449	1	Clip-Adjuster
1:9	120-9396	1	Spring-Return
2	120-9433	1	Cover-Dust, Brake

● Not serviced separately

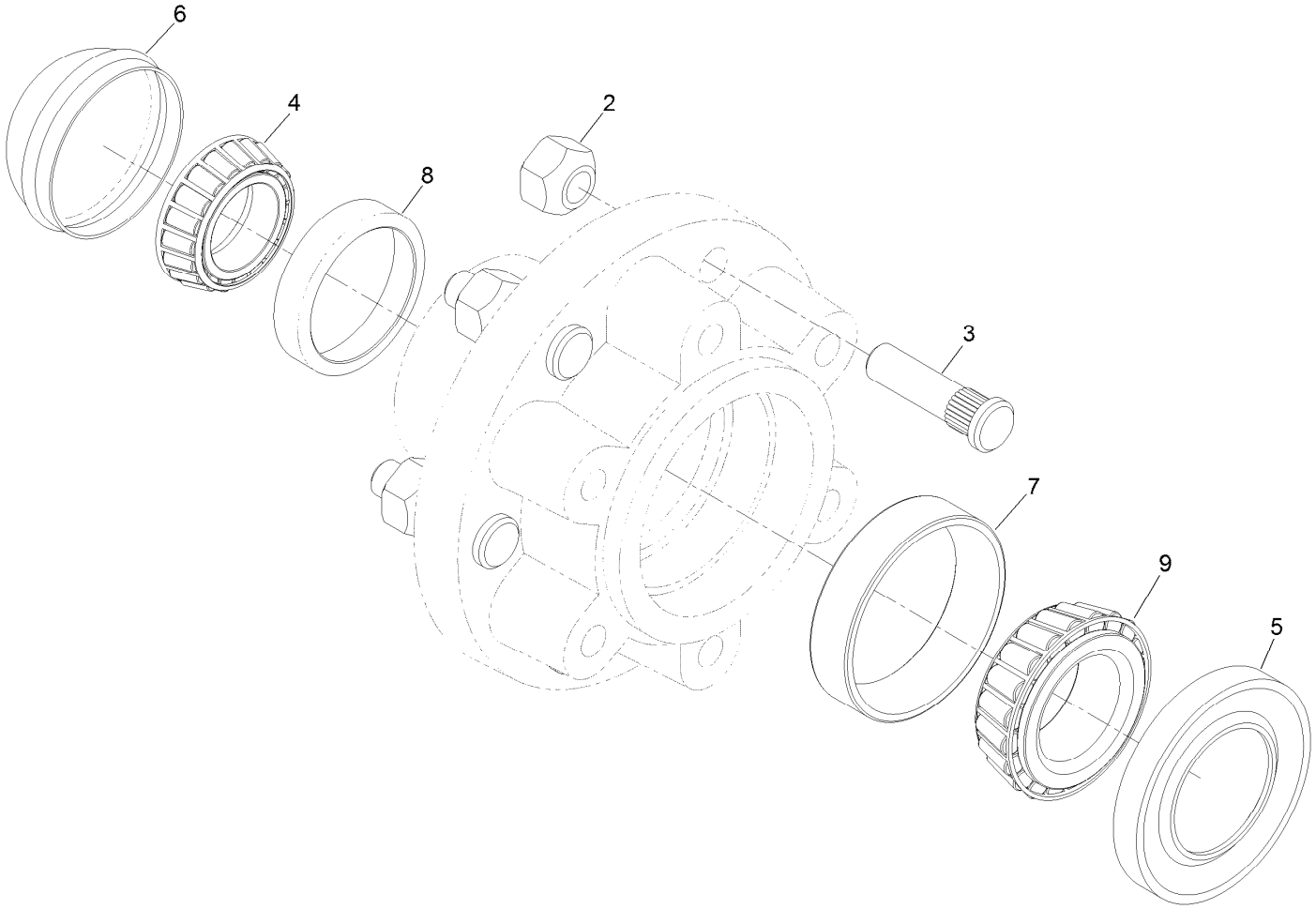

Hub Assembly No. 120-9404

Ref.	*Part Number*	*Qty.*	*Description*
2	T54031040	6	Nut-Wheel
3	T54031042	6	Stud-Wheel
4	T54051010	1	Bearing-Hub, Outer
5	T54051019	1	Seal-Bearing
6	T54051026	1	Cap-Hub (5000/6000 Lb)
7	T54051037	1	Race-Bearing, Inner
8	T54051042	1	Races-Bearing, Outer
9	T54051100	1	Bearing-Hub, Inner

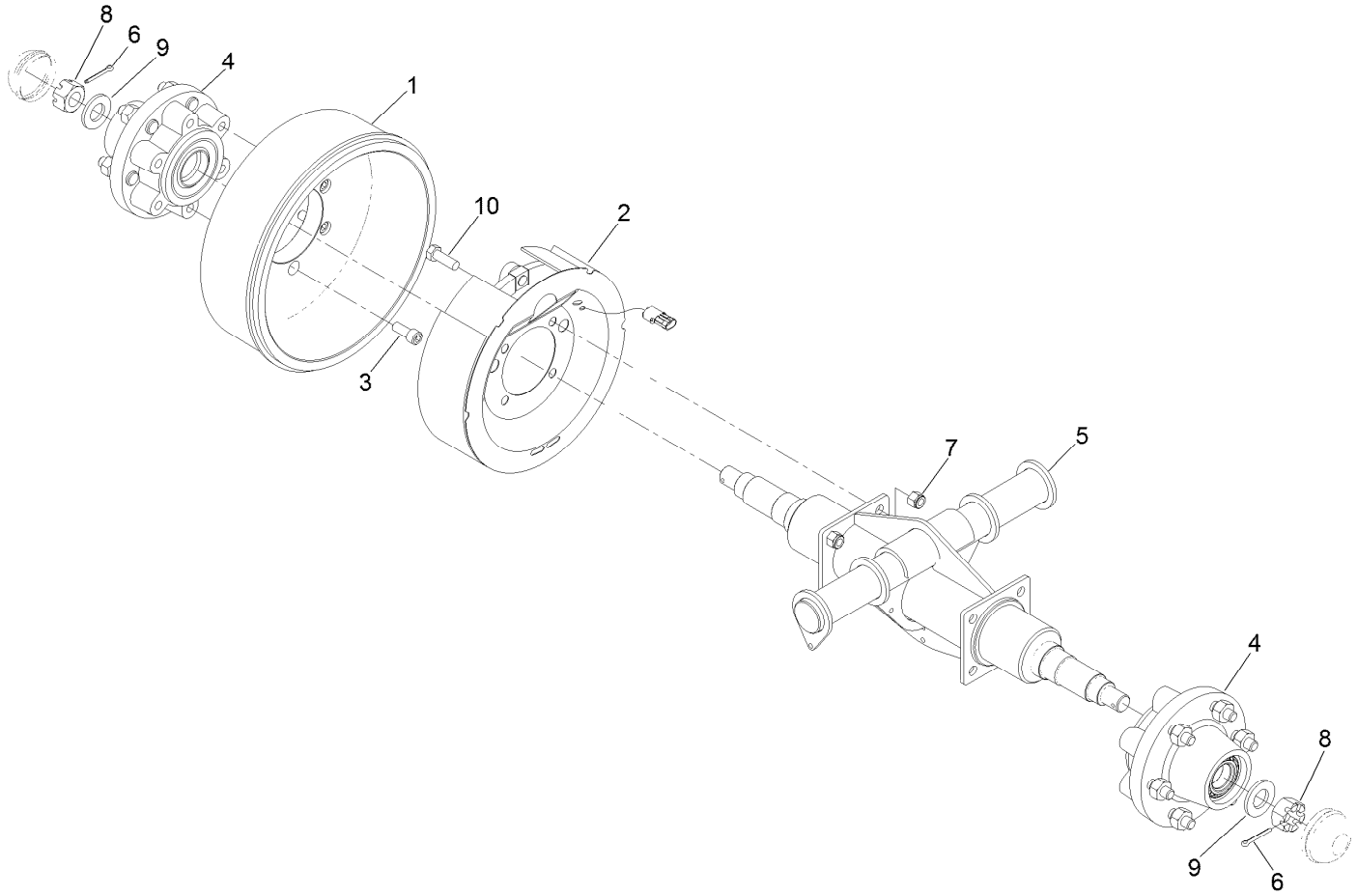

LH Shaft Assembly No. 120-9402

Ref.	*Part Number*	*Qty.*	*Description*
1	119-6871	1	Drum-Brake
2	120-9436	1	RH Brake ASM
3	120-0940	6	Screw-HSH
4	120-9404	2	Hub ASM
5	120-9405-03	1	Beam-Walking
6	3272-23	2	Pin-Cotter
7	3296-19	4	Nut-Hex
8	32136-11	2	Nut-Hex, Slot
9	T54051068	2	Washer-Spindle
10	325-6	4	Screw-HH

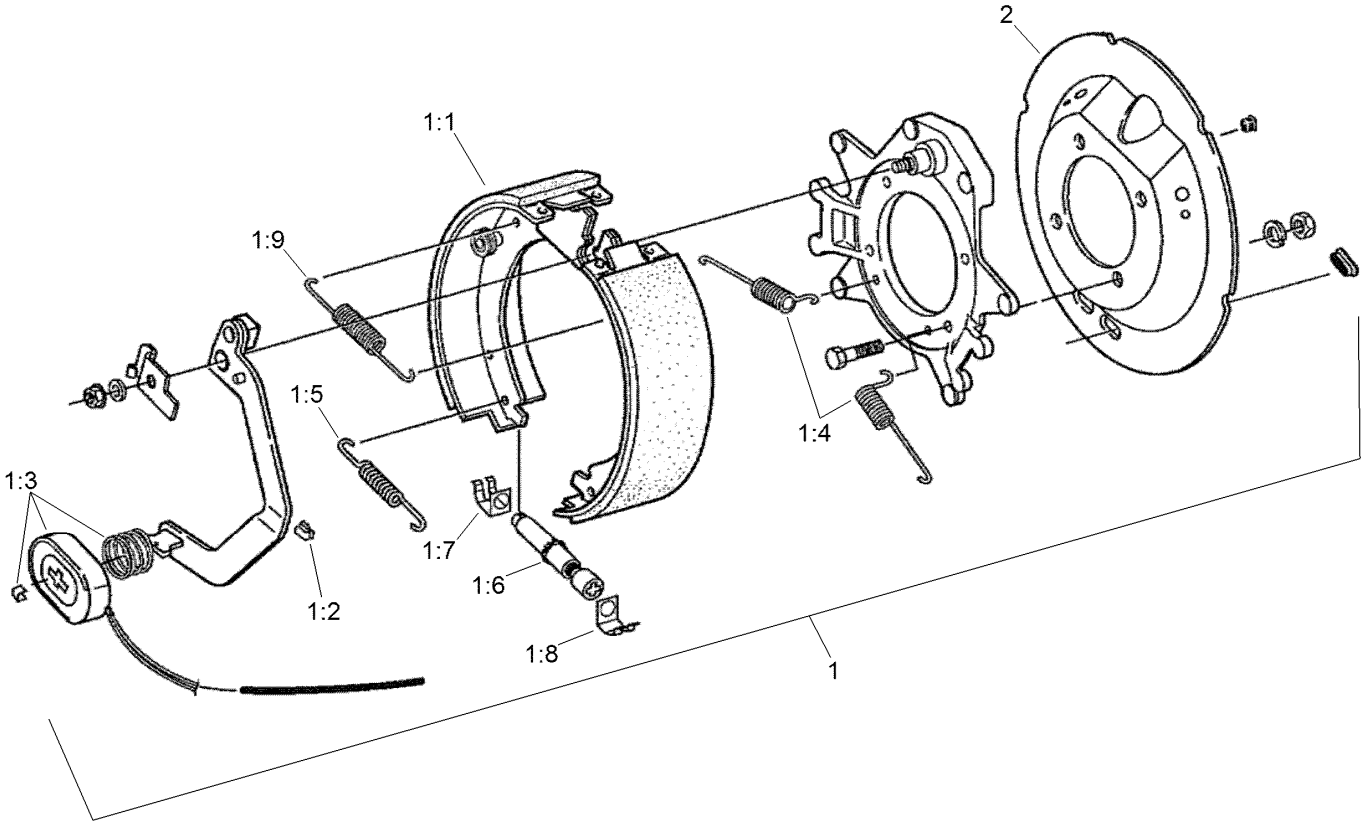

RH Brake Assembly No. 120-9436

Ref.	*Part Number*	*Qty.*	*Description*
1		1	Brake-RH ●
1:1	120-9442	1	RH Shoe And Lining Kit
1:2	120-9443	1	Clip-Wire
1:3	120-9444	1	Magnet Kit
1:4	120-9445	2	Spring-Centering
1:5	120-9446	1	Spring-Adjuster
1:6	120-9447	1	Adjuster Assembly
1:7	120-9448	1	Clip-Adjuster
1:8	120-9449	1	Clip-Adjuster
1:9	120-9396	1	Spring-Return
2	120-9433	1	Cover-Dust, Brake

● Not serviced separately

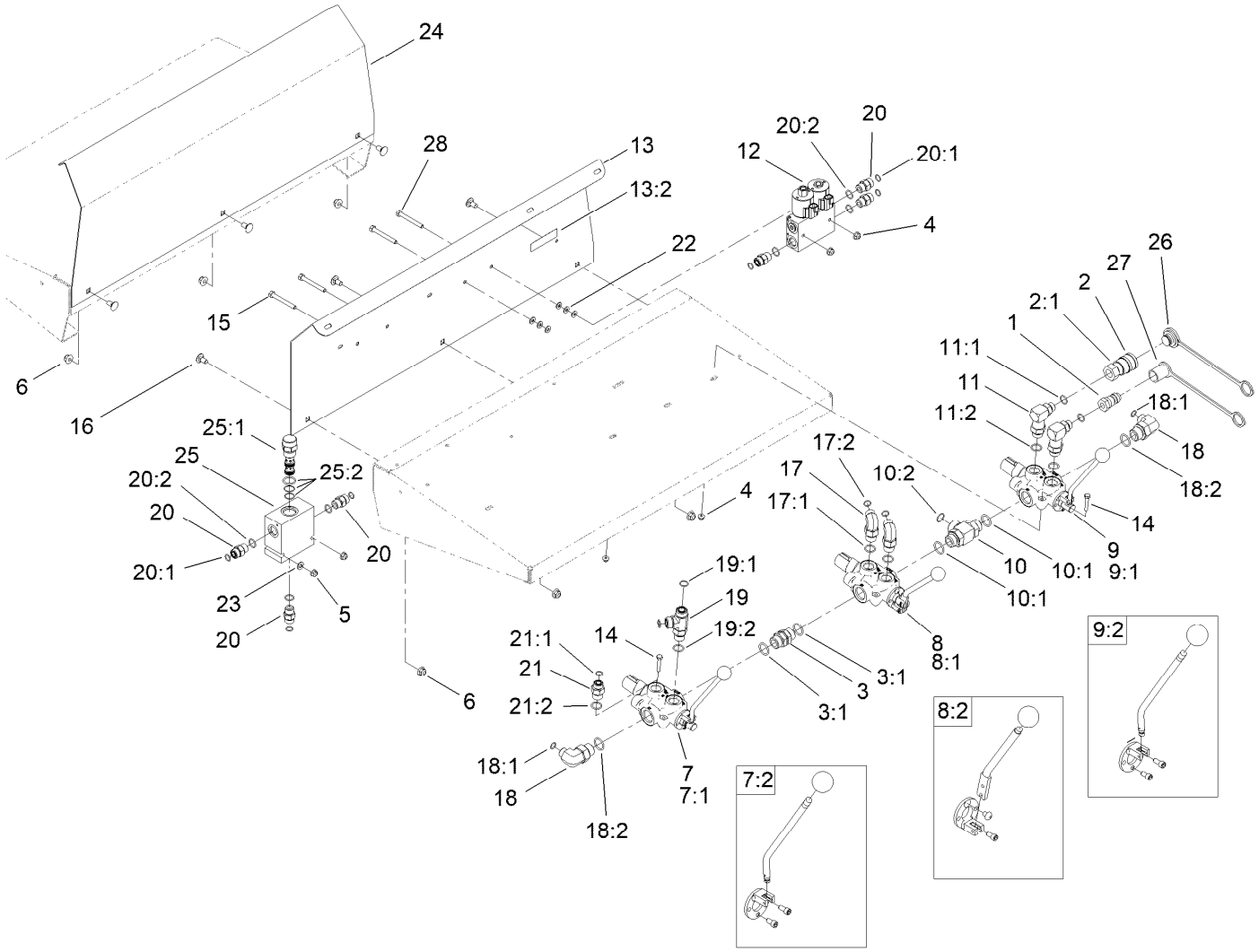

Hydraulic Valve and Manifold Assembly

Ref.	Part Number	Qty.	Description
1	98-4698	1	Male-Disconnect, Quick
2	98-4699	1	Female-Disconnect, Quick
2:1	100-4165	1	Seal Kit
3	98-9906	1	Fitting-Thread, Straight
3:1	237-81	2	O-Ring
4	104-7201	4	Nut-HF, NI
5	104-8300	4	Nut-HF, NI
6	104-8301	6	Nut-HF, NI
7	161-8381	1	Hydraulic Valve ASM
7:1	125-0119	1	Kit-Seal
7:2	161-8384	1	Kit-Lever, Valve
8	161-8382	1	Hydraulic Valve ASM
8:1	125-0119	1	Kit-Seal
8:2	161-8385	1	Kit-Lever, Valve
9	161-8383	1	Hydraulic Valve ASM
9:1	125-0119	1	Kit-Seal
9:2	161-8384	1	Kit-Lever, Valve
10	120-0844	1	Fitting-Tee
10:1	237-81	2	O-Ring
10:2	237-58	1	O-Ring
11	120-0847	2	Fitting-Elbow-90

Ref.	Part Number	Qty.	Description
11:1	237-79	1	O-Ring
11:2	237-80	1	O-Ring
12	125-0149	1	Conveyor Belt Manifold ASM
13	120-0921	1	LH Fender Guard ASM
13:2	119-0217	1	Decal-Danger
14	321-43	2	Capscrew
15	322-13	2	Screw-HH
16	3231-1	6	Screw-CARR
17	340-105	2	Fitting-Elbow, 90 DEG
17:1	237-80	1	O-Ring
17:2	237-30	1	O-Ring
18	340-131	2	Fitting-HYD, 90 DEG
18:1	237-30	1	O-Ring
18:2	237-81	1	O-Ring
19	340-22	1	Fitting-Tee
19:1	237-65	2	O-Ring
19:2	237-80	1	O-Ring
20	340-4	6	Fitting-Straight
20:1	237-30	1	O-Ring
20:2	237-79	1	O-Ring

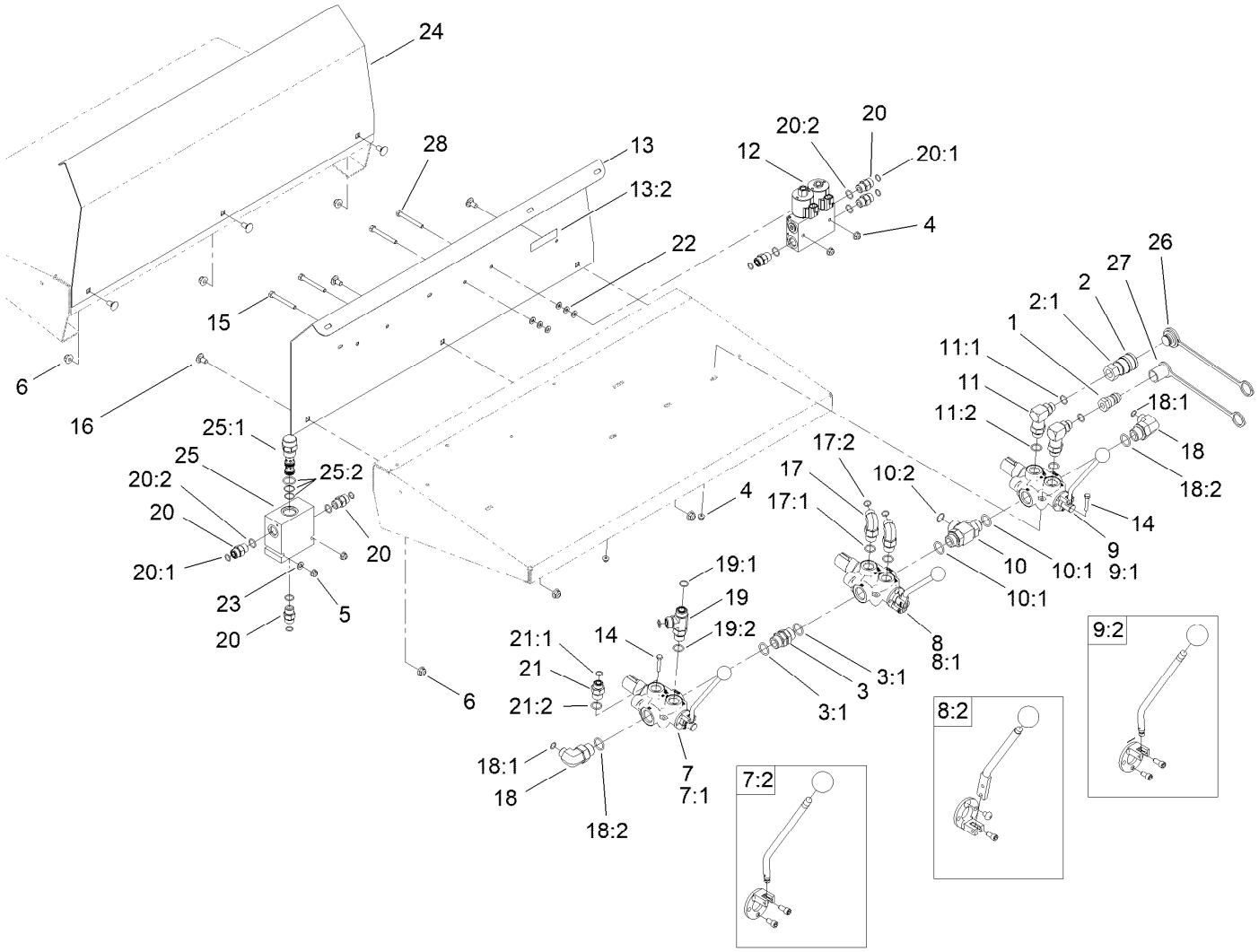

Hydraulic Valve and Manifold Assembly (continued)

Ref.	Part Number	Qty.	Description
21	340-6	1	Fitting-Straight
21:1	237-30	1	O-Ring
21:2	237-80	1	O-Ring
22	3256-22	6	Washer-Flat
23	3256-23	2	Washer-Plain
24	T36011720-01	1	Guard-Fender, RH
25	T56051020	1	Valve-HYD

Ref.	Part Number	Qty.	Description
25:1	120-0851	1	Valve-Cartridge, Pressure Comp
25:2	114-5515	1	Seal Kit
26	T56152150	1	Plug-Quick Connect
27	T56152152	1	Cap-Connect, Quick
28	321-18	2	Screw-HH

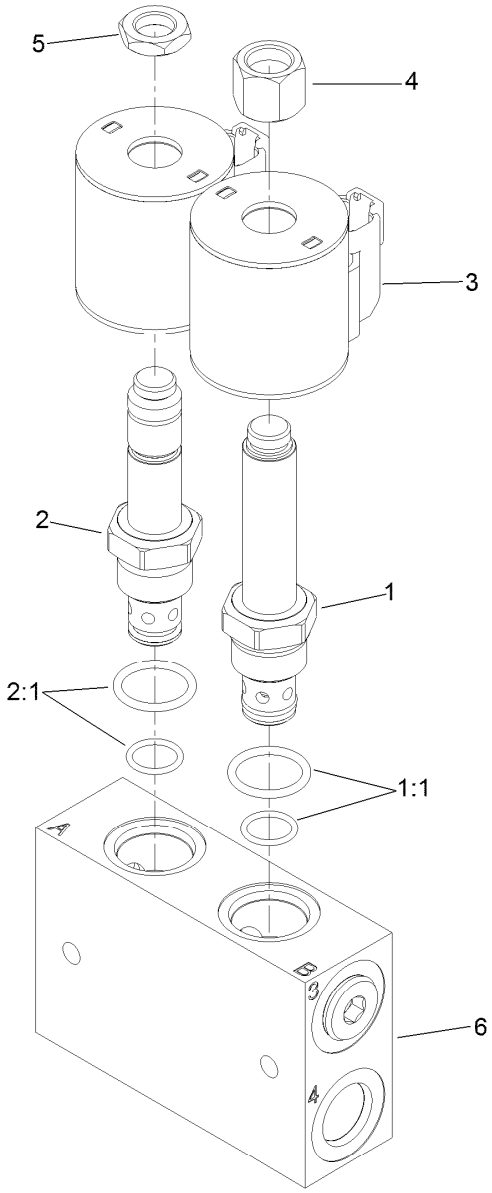

Hydraulic Valve Assembly No. 120-0850

Ref.	*Part Number*	*Qty.*	*Description*
1	105-9158	1	Valve-Solenoid, N.O.
1:1	105-9159	1	Seal Kit ●
2	120-0913	1	Valve-Solenoid
2:1	105-9159	1	Seal Kit
3	115-3021	2	Coil-12V
4	110-2635	1	Nut-Coil
5	110-2634	1	Nut-Coil
6	T56054030	1	Body-Valve

● Not illustrated

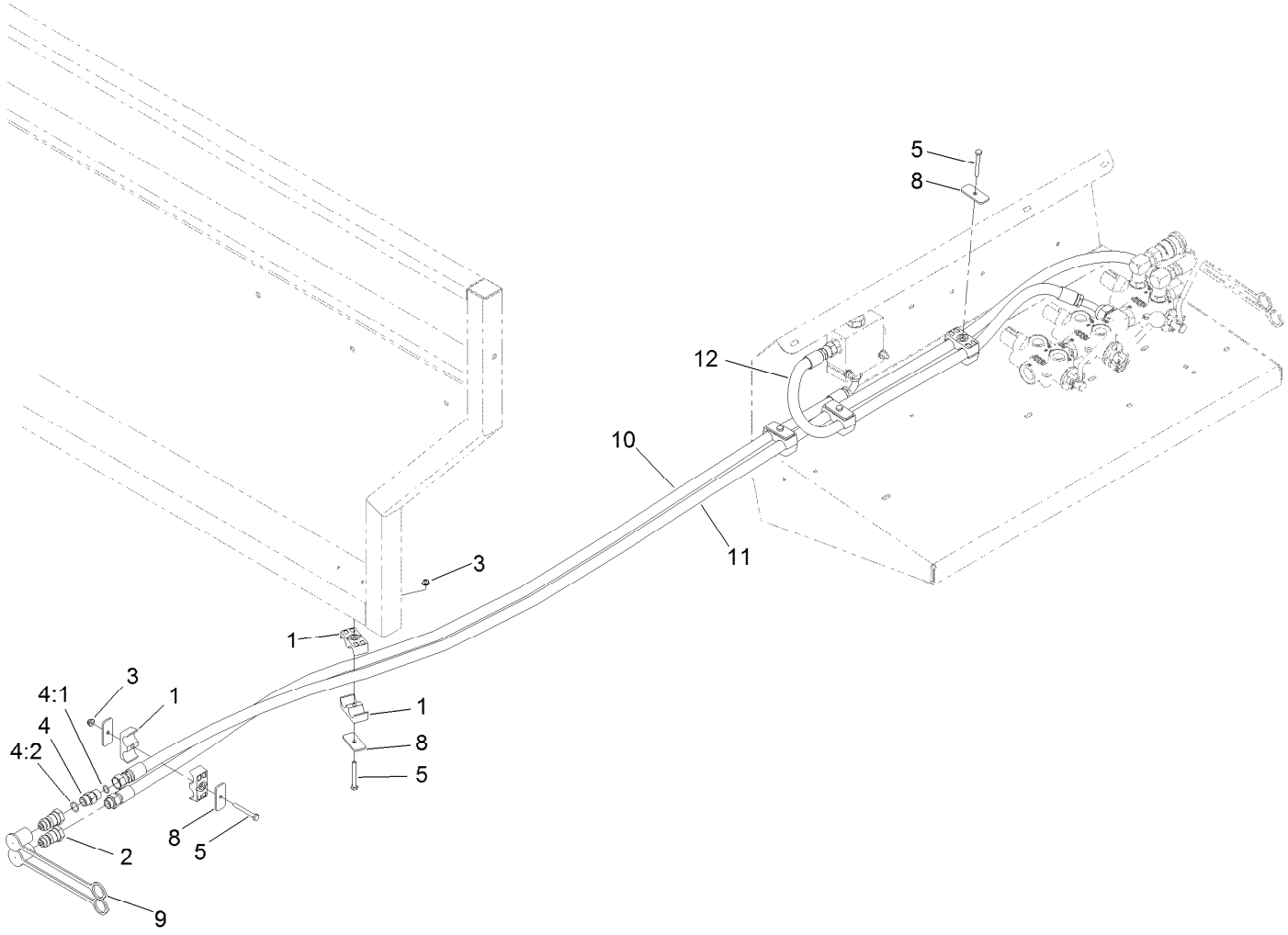

Hydraulic Hose and Clamp Assembly

Ref.	*Part Number*	*Qty.*	*Description*
1	56-7974	10	Clamp-Tube
2	98-4698	2	Male-Disconnect, Quick
3	104-7201	5	Nut-HF, NI
4	119-6898	1	Valve-Check, HYD
4:1	237-30	1	O-Ring
4:2	237-79	1	O-Ring
5	321-18	5	Screw-HH
8	T36033040	6	Plate-Clamp
9	T56152152	2	Cap-Connect, Quick
10	120-0862	1	Hose-HYD
11	120-0863	1	Hose-HYD
12	120-0874	1	Hose-HYD

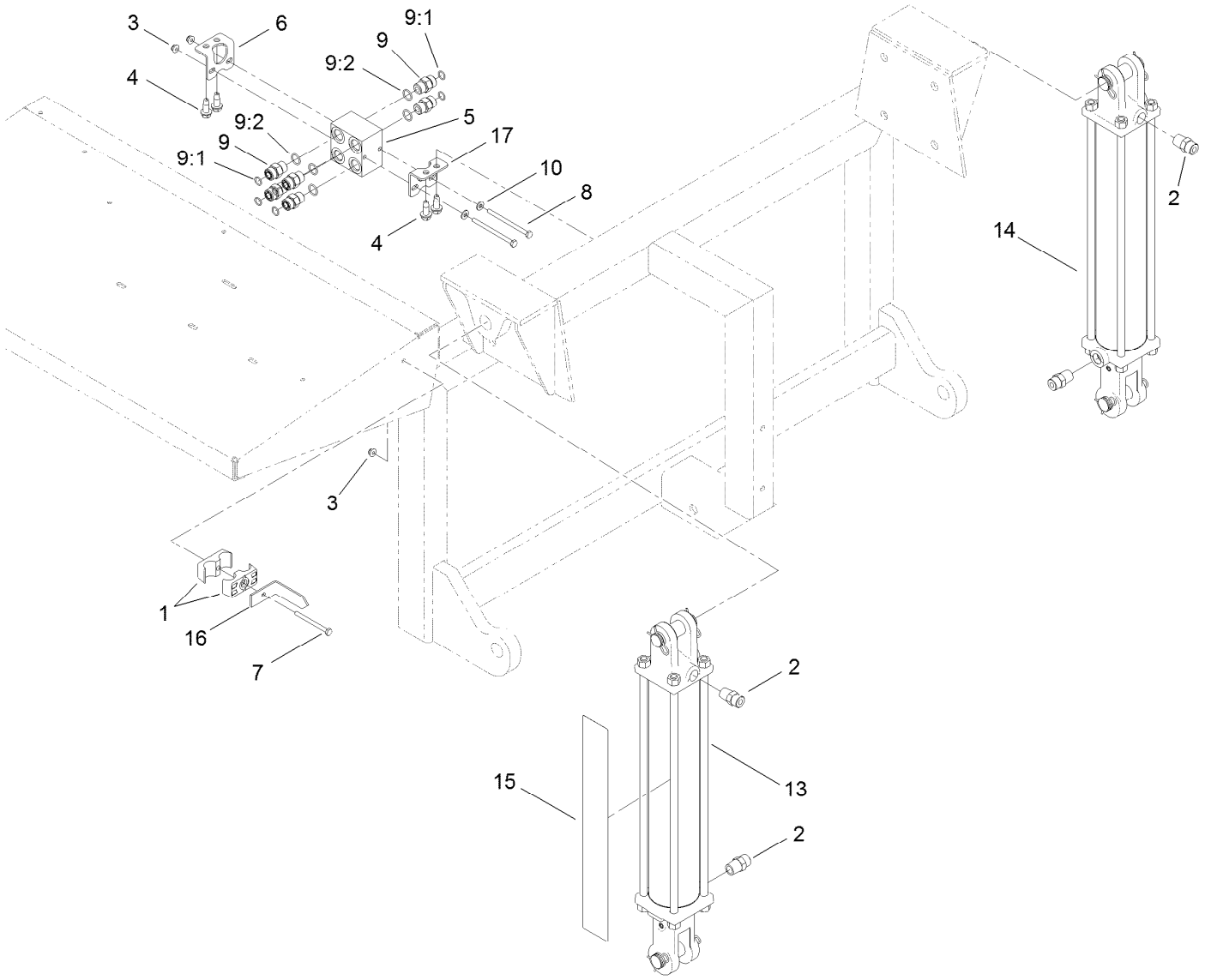

Hydraulic Cylinder and Junction Box Manifold Assembly

Ref.	Part Number	Qty.	Description
1	56-7974	2	Clamp-Tube
2	93-5107	4	Fitting-Adapter
3	104-7201	3	Nut-HF, NI
4	105-6245	4	Screw-Tapping
5	120-0848	1	Manifold-Junction Block
6	120-0875-03	1	Bracket-Mounting, Manifold
7	321-18	1	Screw-HH
8	321-28	2	Screw-HH
9	340-4	6	Fitting-Straight

Ref.	Part Number	Qty.	Description
9:1	237-30	1	O-Ring
9:2	237-79	1	O-Ring
10	3256-22	2	Washer-Flat
13	T56071160	1	HYD Cylinder ASM
14	T56071170	1	HYD Cylinder ASM
15	119-6863	1	Decal-Load Range
16	T36011570	1	Bar-Indicator, Lift
17	120-0983-03	1	Bracket-Manifold

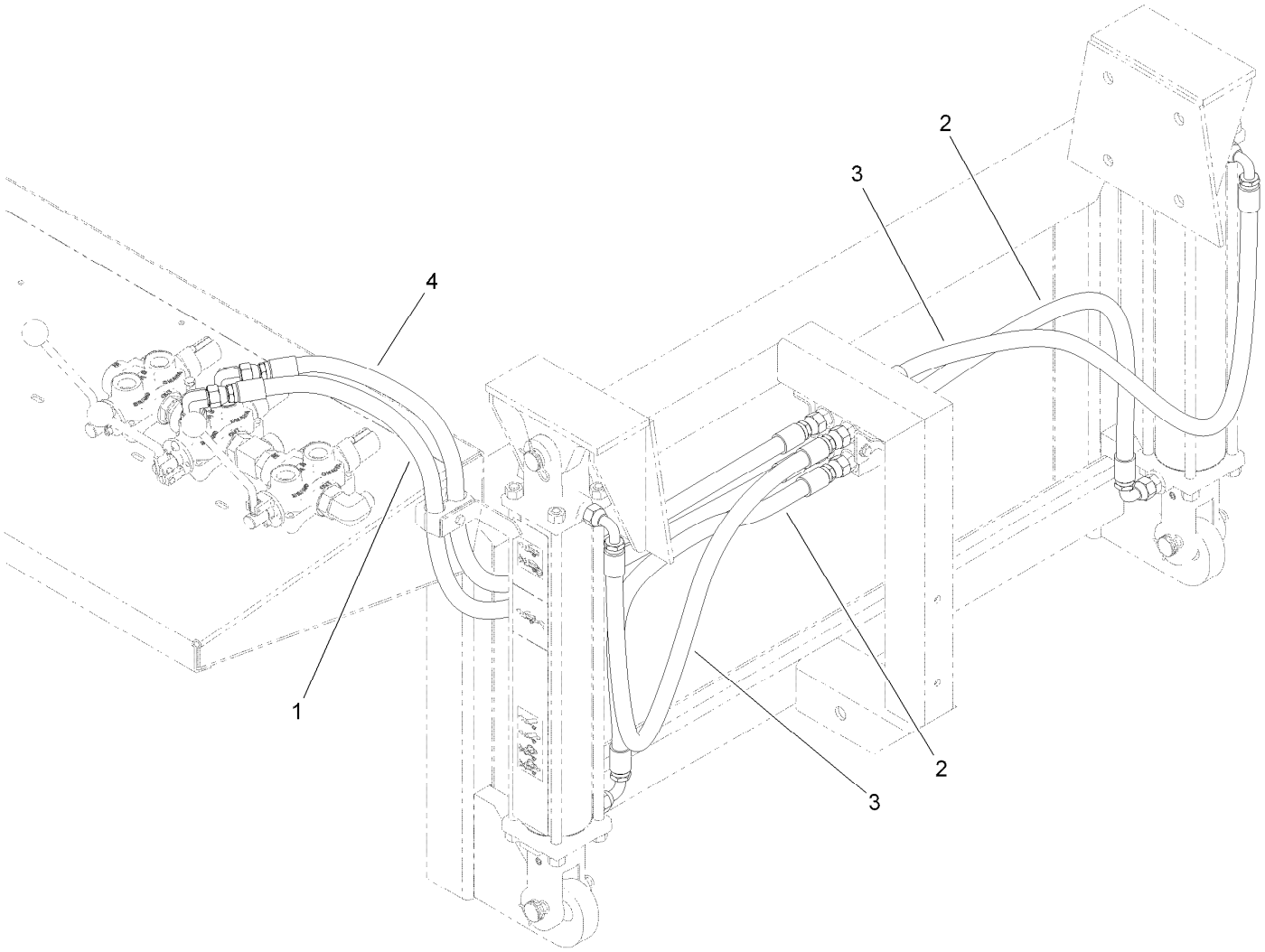

Hydraulic Hose Assembly

Ref.	*Part Number*	*Qty.*	*Description*
1	120-0980	1	Hose-HYD
2	120-0869	2	Hose-HYD
3	120-0870	2	Hose-HYD
4	120-0981	1	Hose-HYD

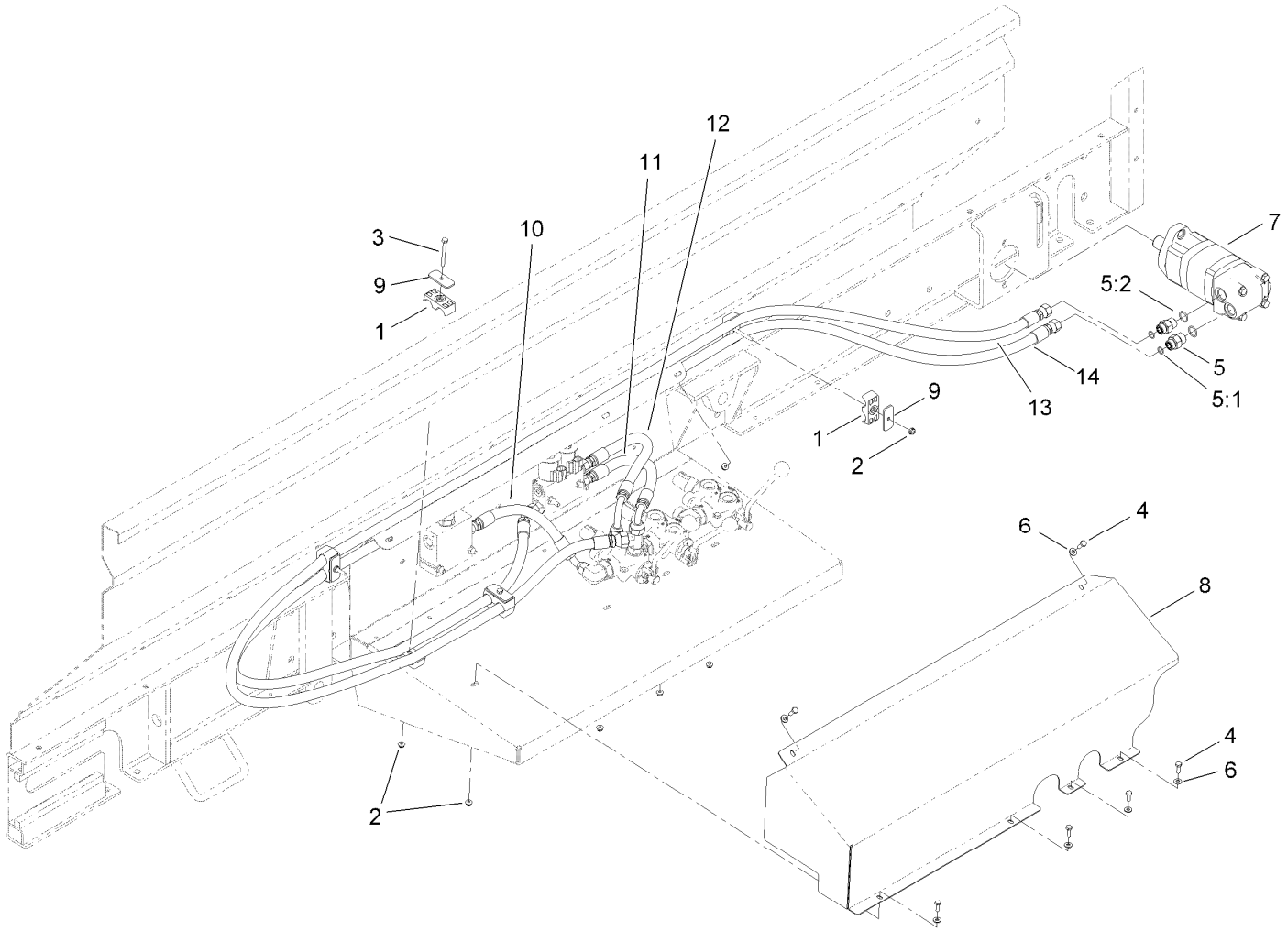

Hydraulic Guard Box Assembly

Ref.	Part Number	Qty.	Description
1	56-7974	8	Clamp-Tube
2	104-7201	10	Nut-HF, NI
3	321-18	2	Screw-HH
4	321-4	6	Screw-HH
5	340-6	2	Fitting-Straight
5:1	237-30	1	O-Ring
5:2	237-80	1	O-Ring
6	3256-22	6	Washer-Flat

Ref.	Part Number	Qty.	Description
7	T0000-5303	1	HYD Motor ASM
8	T36011770-01	1	Guard-Hydraulic
9	T36033040	4	Plate-Clamp
10	120-0858	1	Hose-HYD
11	120-0860	1	Hose-HYD
12	120-0861	1	Hose-HYD
13	120-0864	1	Hose-HYD
14	119-4591	1	Hose-HYD

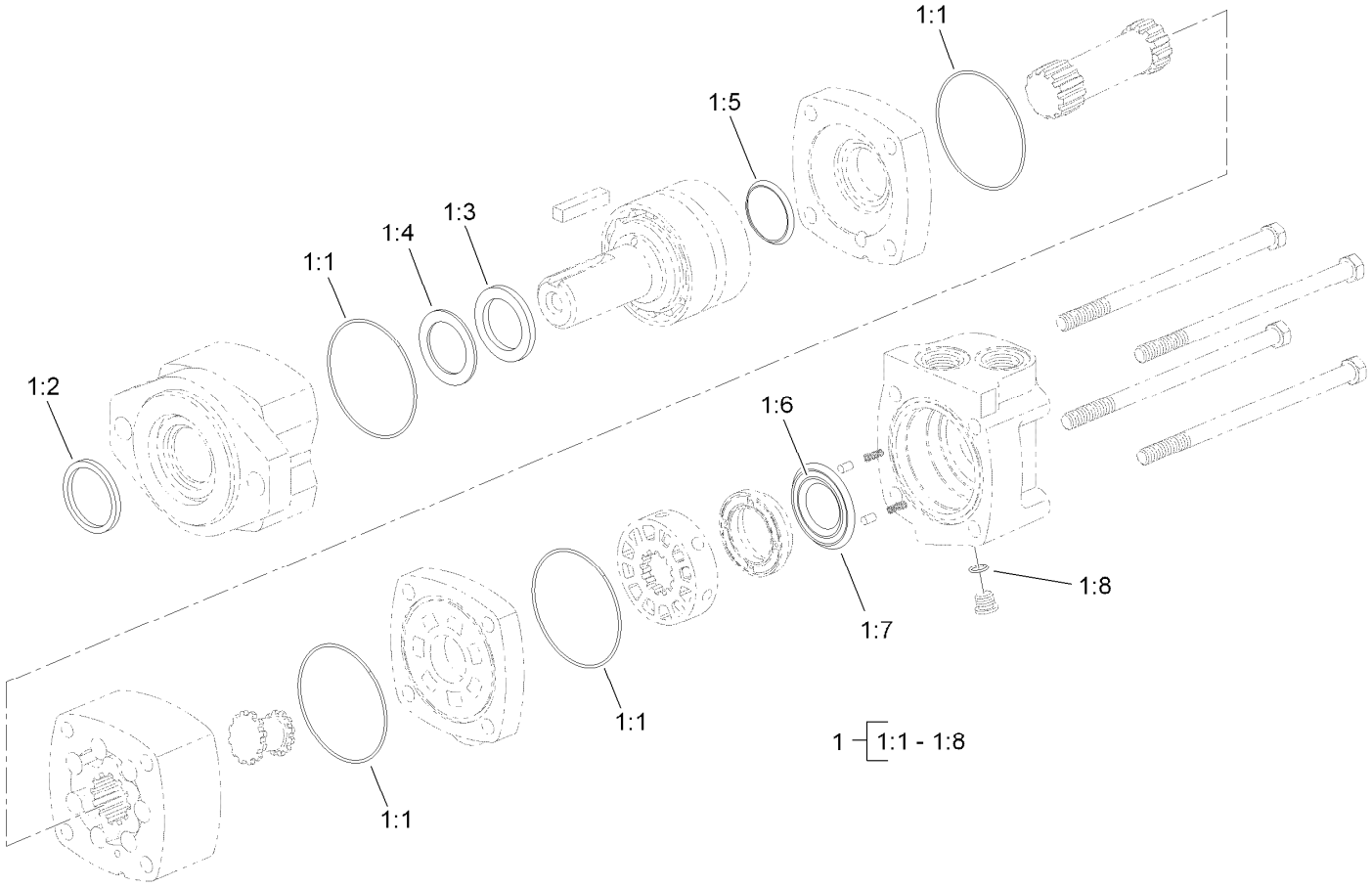

Hydraulic Motor Assembly No. T0000-5303

Ref.	*Part Number*	*Qty.*	*Description*
1	56-6890	1	Seal Kit
1:1		4	O-Ring ●
1:2		1	Seal-Exclusion, Shaft ●
1:3		1	Seal-Shaft ●
1:4		1	Ring-Back-Up ●
1:5		1	Seal-Face, Shaft ●
1:6		1	Seal-Face, Inner ●
1:7		1	Seal-Face, Outer ●
1:8		1	O-Ring ●

● Not serviced separately

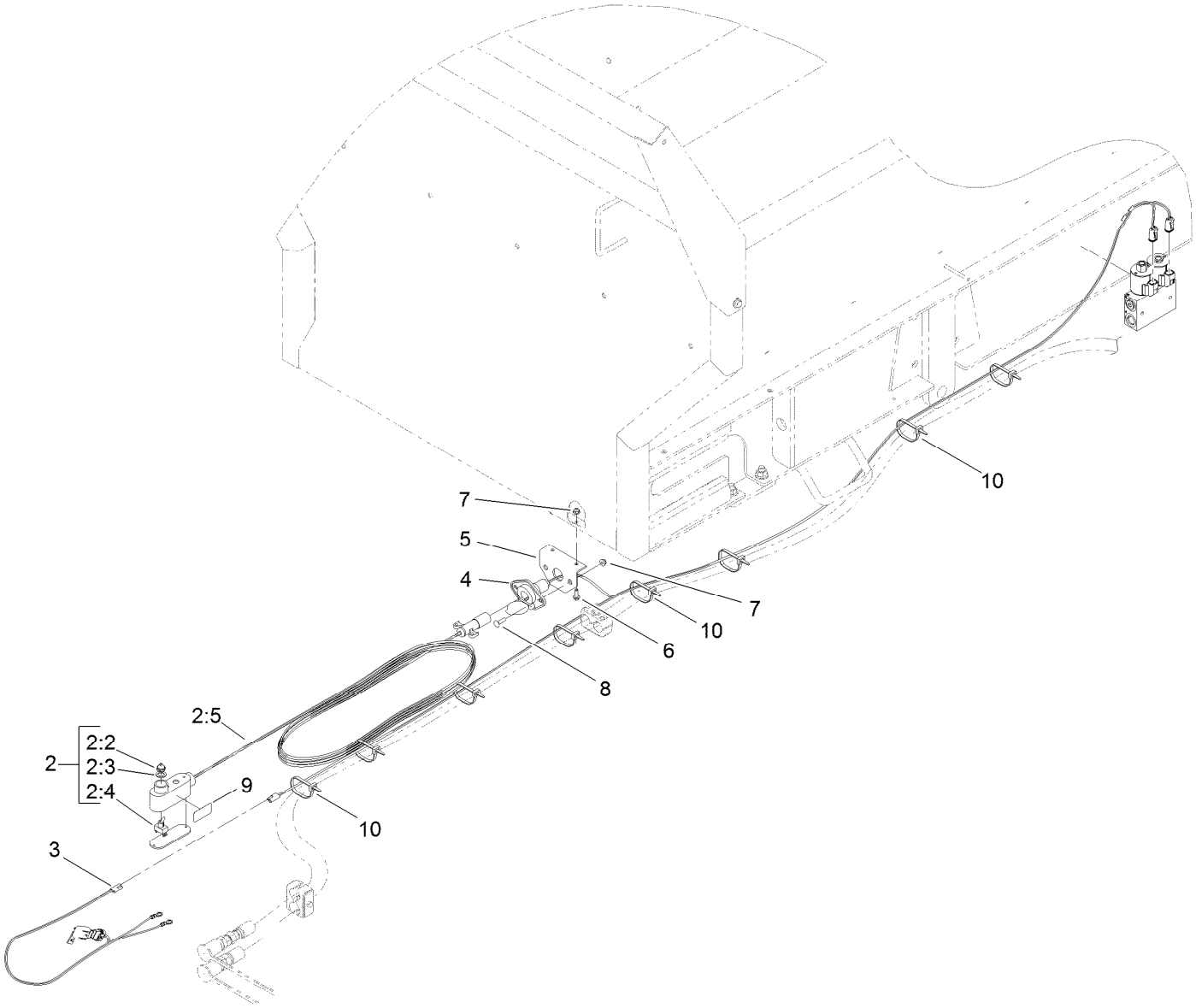

Electrical Assembly

Ref.	Part Number	Qty.	Description
2	120-0801	1	Pendant ASM
2:2	119-7554	1	Boot-Toggle Switch, Weatherproof
2:3	41-8440	1	Washer
2:4	119-7551	1	Switch-Toggle, 2-Way
2:5	120-0988	1	Harness-Wire
3	120-0852	1	Harness-Wire, Battery
4	120-0853	1	Harness-Wire, Rear
5	T36016086-01	1	Bracket-Socket
6	115-5103	2	Screw-HHF
7	104-7201	4	Nut-HF, NI
8	3229-2	2	Screw-CARR
9	119-6822	1	Decal-Floor Conveyor
10	3290-378	10	Tie-Cable

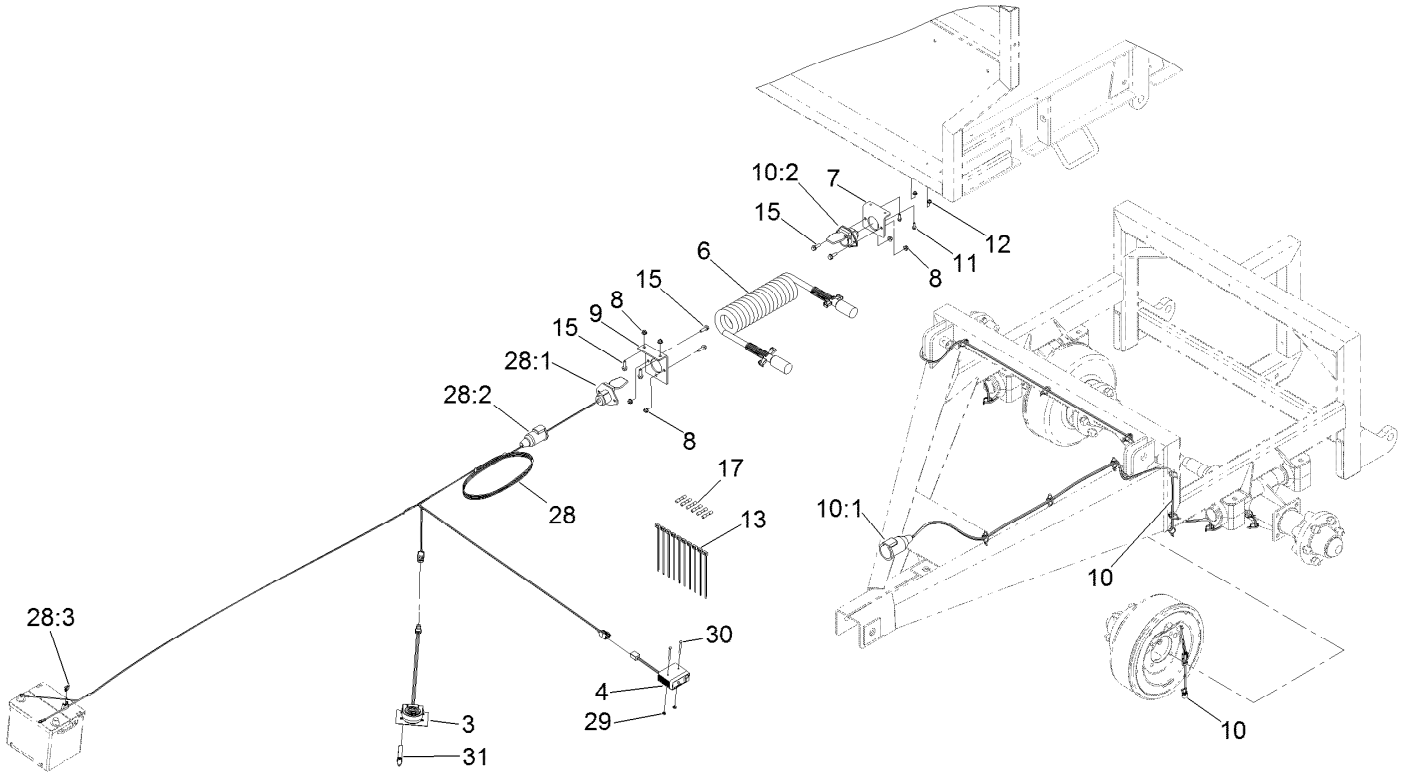

Brake Assembly

Ref.	Part Number	Qty.	Description
3	108-3144	1	Controller-Brake, Electric
4	125-0108	1	Control-Foot,
6	T58071132	1	Cable-Coil, 12 Ft.
7	120-0892	1	Bracket-Connector
8	104-8300	6	Nut-HF, NI
9	T36016080	1	Bracket-Tractor
10	120-9438	1	Harness-Wire, Electric Brakes
10:1	120-0876	1	Boot-Socket
10:2	32160-322	1	Connector-Trailer, 7M
11	115-5103	2	Screw-HHF

Ref.	Part Number	Qty.	Description
12	104-7201	2	Nut-HF, NI
13	3290-378	10	Tie-Cable
15	3234-29	6	Screw-HHF
17	32180-046	6	Splice-Heatshrink Covered
28	121-6577	1	Harness-Wire, Brake, Trailer
28:1	32160-322	1	Connector-Trailer, 7M
28:2	120-0876	1	Boot-Socket
28:3	218-578	1	Fuse-Blade, 10 Amp
29	3296-2	2	Nut-Lock, NI
30	32105-20	2	Screw-HH
31	2412-42	1	Clamp-Hose

Notes:

Notes:

Notes:

TORO®

Count on it.