Form No. 3462-767 Rev D

TORO®

Count on it.

Parts Catalog

TX 700

Wide Track Compact Tool Carrier

Model No. 22352—Serial No. 412900000 and Up

Register at www.Toro.com.
Original Instructions (EN)

CE

3462-767 D

Ordering Replacement Parts

To order replacement parts, please supply the part number, the quantity, and the description of each part desired.

Understanding Reference Numbers

Each identified part in an illustration has a reference number. The reference number for a part also appears in the parts list, along with other information about the part.

This catalog uses two special reference number formats, one to indicate parts in a service assembly and another to indicate the quantity of a given part in an illustration.

Service Assembly Reference Numbers

Parts in service assemblies have reference numbers in the form a:b. The a represents the reference number of the entire service assembly and the b represents a sequential number unique to each part within the service assembly.

For example, a wheel assembly might be identified by reference number 6, the tire by 6:1, the valve by 6:2, and the wheel by 6:3. When you order the assembly identified by reference number 6, you receive all parts identified by reference numbers 6:1,6:2, and 6:3. However, you may also order any part individually. Reference numbers of this type appear in illustration and in parts lists.

Reference Numbers Indicating Quantity

In an illustration, if a reference number indicates more than one part, the reference number has the form nX y. The n represents the quantity of the part, the X is the multiplication symbol, and the y represents the reference number.

For example, in an illustration, the reference number 2X 37 means that two of the parts identified by reference number 37 are indicated.

Contents

Frame Assembly 4
Frame Assembly No. 144-6092 6
Track Assembly 8
RH Track Assembly No. 139-7293 10
LH Track Assembly No. 139-7294 12
Parking Brake Assembly 14
Traction Hydraulic Assembly 16
Radiator and Air Cleaner Assembly 18
Air Cleaner Assembly No. 117-9989 20
Engine and Pump Assembly 22
Hydraulic Pump Assembly No. 140-3048 24
Hydraulic Assembly 26
Traction Control Assembly No. 140-2940 28
Control Valve Assembly No. 145-3279 30
Loader Arm Assembly 32
Loader Arm Assembly No. 145-3225 34
Hydraulic Cylinder Assembly No. 140-2974 36
Loader Arm Hydraulic Assembly 38
Quick Attach Assembly 40
Quick Attach Assembly No. 132-8418 42
Hydraulic Cylinder Assembly No. 145-3202 44
Fuel Assembly 46
Fuel Tank Assembly No. 140-5762 48
Hood and Manual Tube Assembly 50
Hood Assembly No. 140-2936 52
Platform Assembly 54
Electrical Assembly 56
Wiring Harness Assembly No. 122-2177 58
Cylinder Block Assembly 60
Gear Housing Assembly 62
Flywheel Housing and Oil Sump Assembly 64
Cylinder Head and Cover Assembly 66
Exhaust Manifold and Muffler Assembly 68
Camshaft and Driving Gear Assembly 70
Crankshaft and Piston Assembly 72
Lubrication and Oil System Assembly 74
Cooling Water System Assembly 76
Fuel Injection Pump Assembly 78
Governor Assembly 80
Fuel Injection Valve Assembly 82
Starter Motor Assembly 84
Generator Assembly 86
Timer Assembly 88
Gasket Set 90
Attachments and Accessories 92

© 2024—The Toro® Company
8111 Lyndale Avenue South
Bloomington, MN 55420

Contact us at www.Toro.com.
Printed in the USA.
All Rights Reserved

Frame Assembly

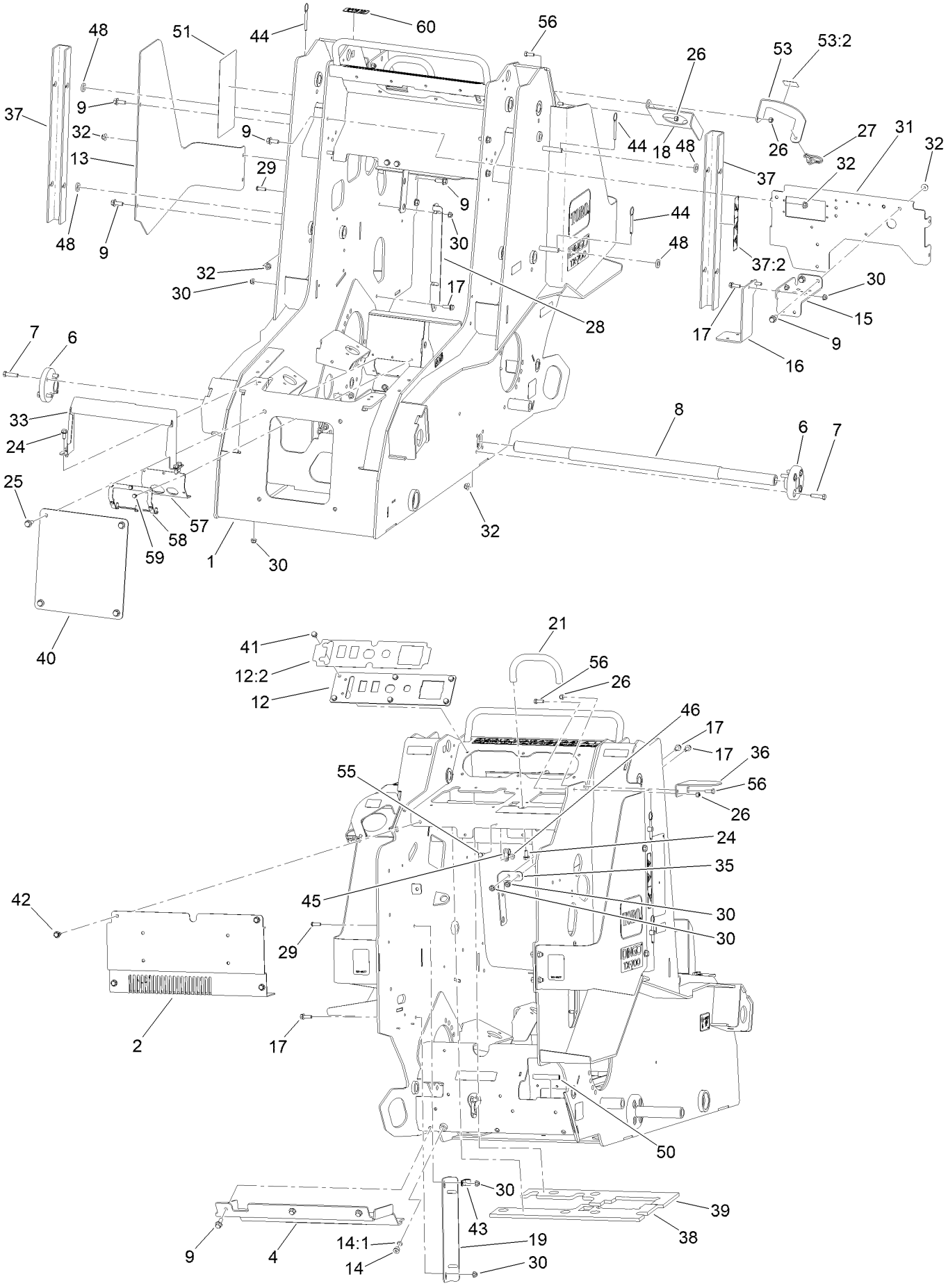

Frame Assembly (continued)

Ref.	Part Number	Qty.	Description
1	144-6092	1	Main Frame ASM
2	144-6085-03	1	Air Box [black]
4	140-2888-01	1	Plate-Bottom, Frame
6	132-9074	2	Hub-Shaft
7	323-8	8	Screw-HH
8	125-0425	1	Shaft-Track
9	3234-42	13	Screw-HHF
12	144-7451	1	Plate-Console
12:2	140-5791	1	Decal-Controls
13	145-0640	1	Wrap-Tank, RH
14	353-989	1	Plug-Hex, Hollow
14:1	237-42	1	O-Ring
15	145-3332-01	1	Bracket-Tank
16	140-2923-01	1	Bracket-Tank
17	3234-17	4	Screw-HHF
18	144-6068-03	1	Bracket-Fuel
19	140-5734-03	1	Angle
21	112-2620	1	Bar-Reference
24	3234-5	6	Screw-HHF
25	3234-24	4	Screw-HHF
26	3296-29	4	Nut-Lock, NI
27	145-3228	1	Pin-Lynch
28	140-5735-03	1	Angle
29	109-4872	4	Screw-HSH
30	104-8300	12	Nut-HF, NI
31	140-2849-01	1	Plate-Console Cover, Front
32	104-8301	18	Nut-HF, NI
33	140-5736-03	1	Strap-Hood
35	140-2924-03	1	Bracket-Tank
36	147-9010-03	1	Cap-Cover
37	130-5315	2	Arm-Locking
37:2	115-4858	1	Decal-Danger
38	140-5756	1	Foam-Heat Shield
39	140-5755	1	Foam-Heat Shield
40	144-6070-01	1	Cover-Front
41	700057	6	Screw-HWH
42	105-6245	4	Screw-Tapping
43	92-6064	1	Clamp-R
44	108-0094	4	Pin-Cotterless
45	2412-134	1	Clamp-R
46	32128-33	1	Nut-HF
48	83-1470	4	Washer-Neoprene
50	144-6078	1	Trim
51	147-9016	1	Decal-Service
53	130-5317	1	Plate-Lock, Fuel Cap, RH
53:2	130-2845	1	Decal-Ultra Low Sulfur Diesel
55	321-5	1	Screw-HH
56	322-4	4	Screw-HH
57	145-3270	1	Air - Guard
58	145-3271	1	Retaining - Ring
59	32144-4	7	Screw-HWH
60	125-8483	1	Decal-HYD Fluid

Frame Assembly No. 144-6092

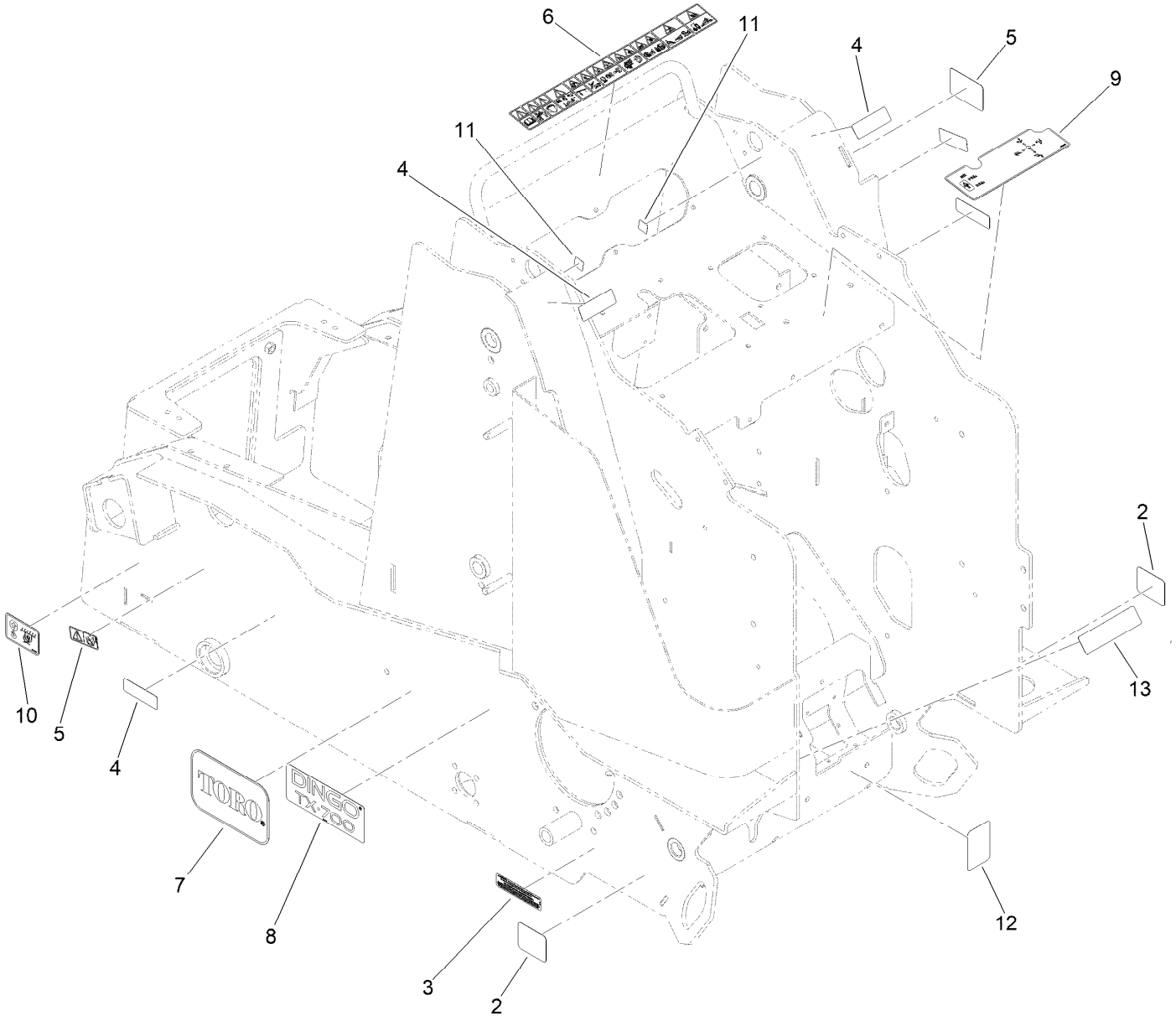

Frame Assembly No. 144-6092 (continued)

Ref.	Part Number	Qty.	Description
2	125-6694	2	Decal-Tie Down
3	133-8062	1	Decal-Spark Arrestor
4	120-0625	4	Decal-Warning
5	115-2047	2	Decal-Surface, Hot
6	145-0637	1	Decal-Safety
7	145-0609	1	Decal-Toro Logo
8	140-5790	1	Decal-Dingo Tx700
9	145-0638	1	Decal-Loader Control
10	125-6139	2	Decal-Lift/Tie Down
11	93-9084	2	Decal-Point, Lift
12	100-4627	1	Reflector
13	131-0709	1	Decal-Parking Brake

Track Assembly

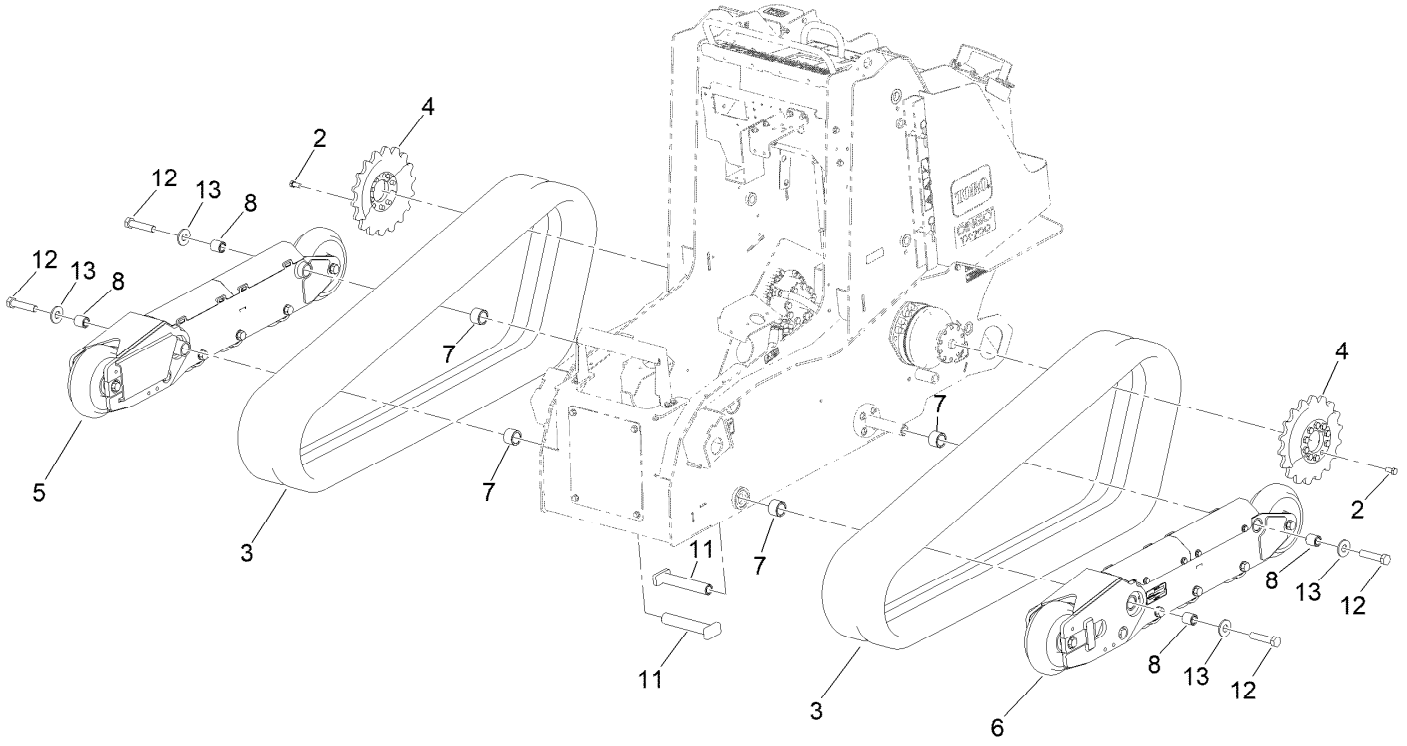

Track Assembly (continued)

Ref.	Part Number	Qty.	Description
2	33116-025	20	Screw-HH
3	138-0777	2	Track-Wide,
4	139-7118	4	Sprocket-Drive
5	139-7293	1	Track ASM-RH
6	139-7294	1	Track ASM-LH
7	144-4268	4	Spacer-Track
8	145-3157	4	Sleeve-Track
11	145-3322	2	Pin-Track
12	AU426-1256	4	Screw-HH
13	99-2659	4	Washer

RH Track Assembly No. 139-7293

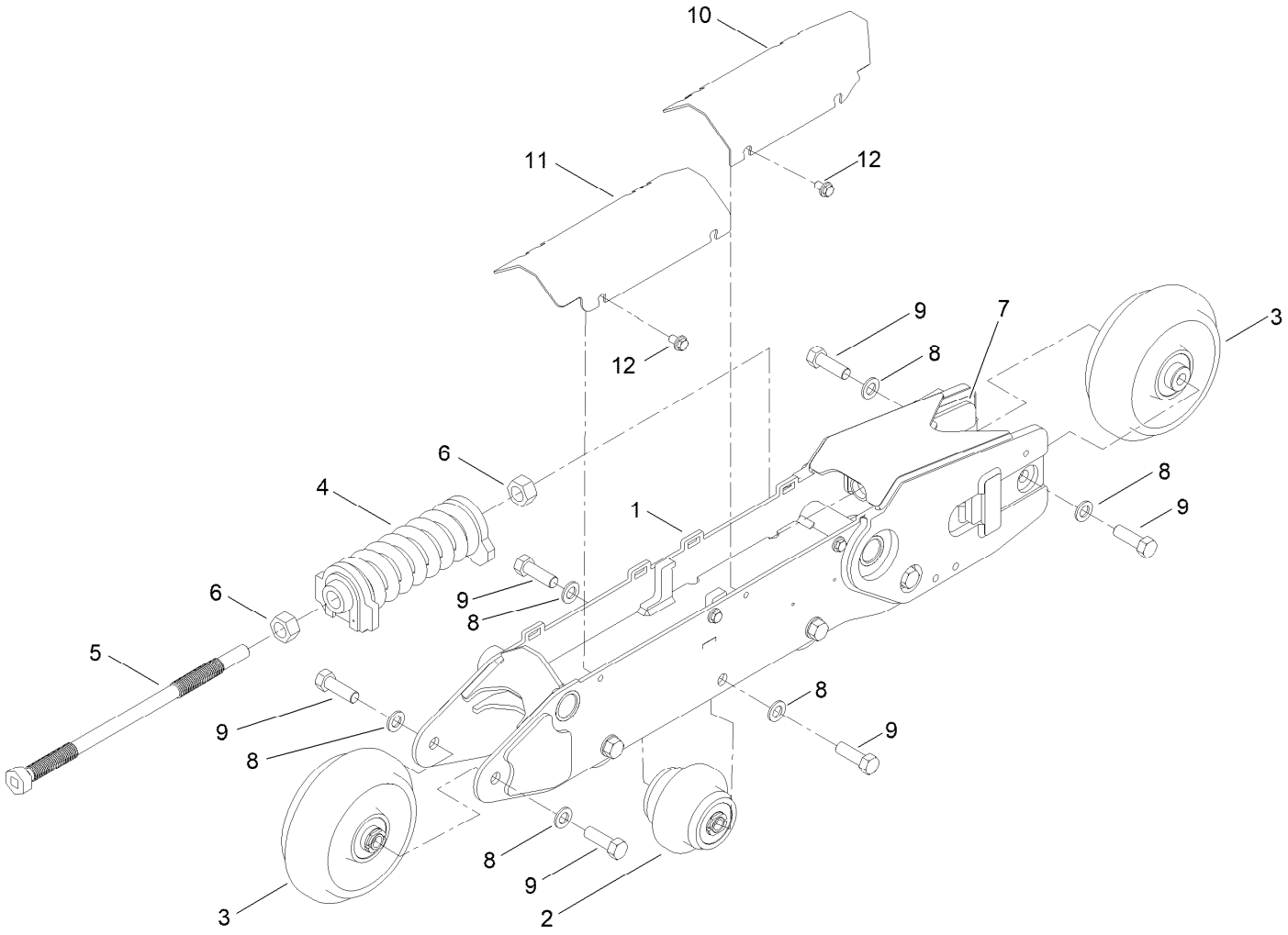

RH Track Assembly No. 139-7293 (continued)

Ref.	Part Number	Qty.	Description
1	139-7292	1	Frame-Track RH
2	137-8808	4	Wheel ASM,
3	137-8807	2	Tensioner Wheel ASM
4	140-5872	1	Kit-Spring Tension
5	139-7298	1	Screw-Tensioner
6	3217-15	2	Nut-Hex
7	139-7301	1	Yoke-Tensioner
8	139-7310	12	Washer
9	111-3484	12	Screw-HH
10	139-7311	1	Plate-Cover RH
11	139-7312	1	Plate-Cover RH
12	63-11-019	4	Screw-HHF

LH Track Assembly No. 139-7294

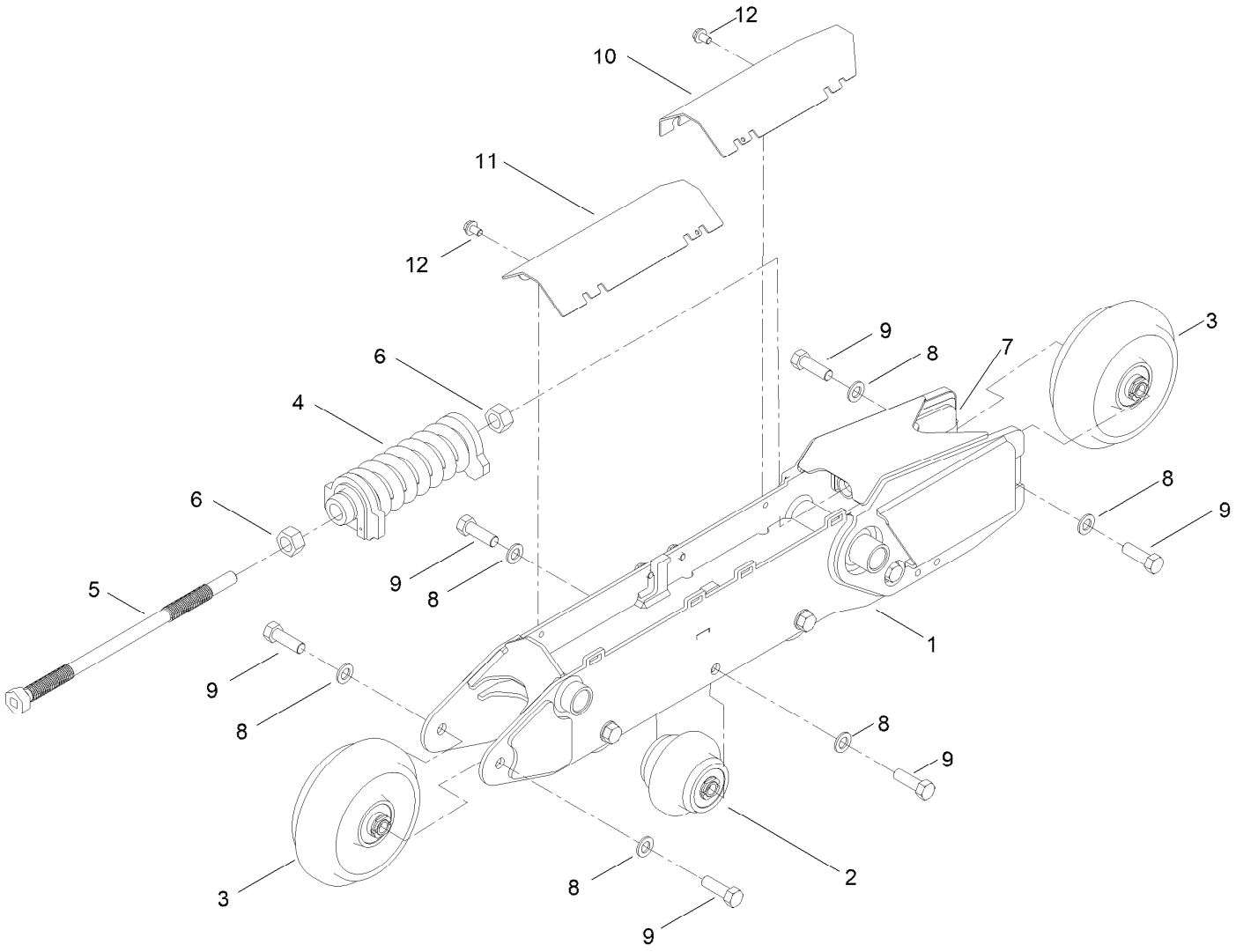

LH Track Assembly No. 139-7294 (continued)

Ref.	Part Number	Qty.	Description
1	139-7303	1	Frame-Track LH
2	137-8808	4	Wheel ASM,
3	137-8807	2	Tensioner Wheel ASM
4	140-5872	1	Kit-Spring Tension
5	139-7298	1	Screw-Tensioner
6	3217-15	2	Nut-Hex
7	139-7301	1	Yoke-Tensioner
8	139-7310	12	Washer
9	111-3484	12	Screw-HH
10	139-7304	1	Plate-Cover LH
11	139-7305	1	Plate-Cover LH
12	63-11-019	4	Screw-HHF

Parking Brake Assembly

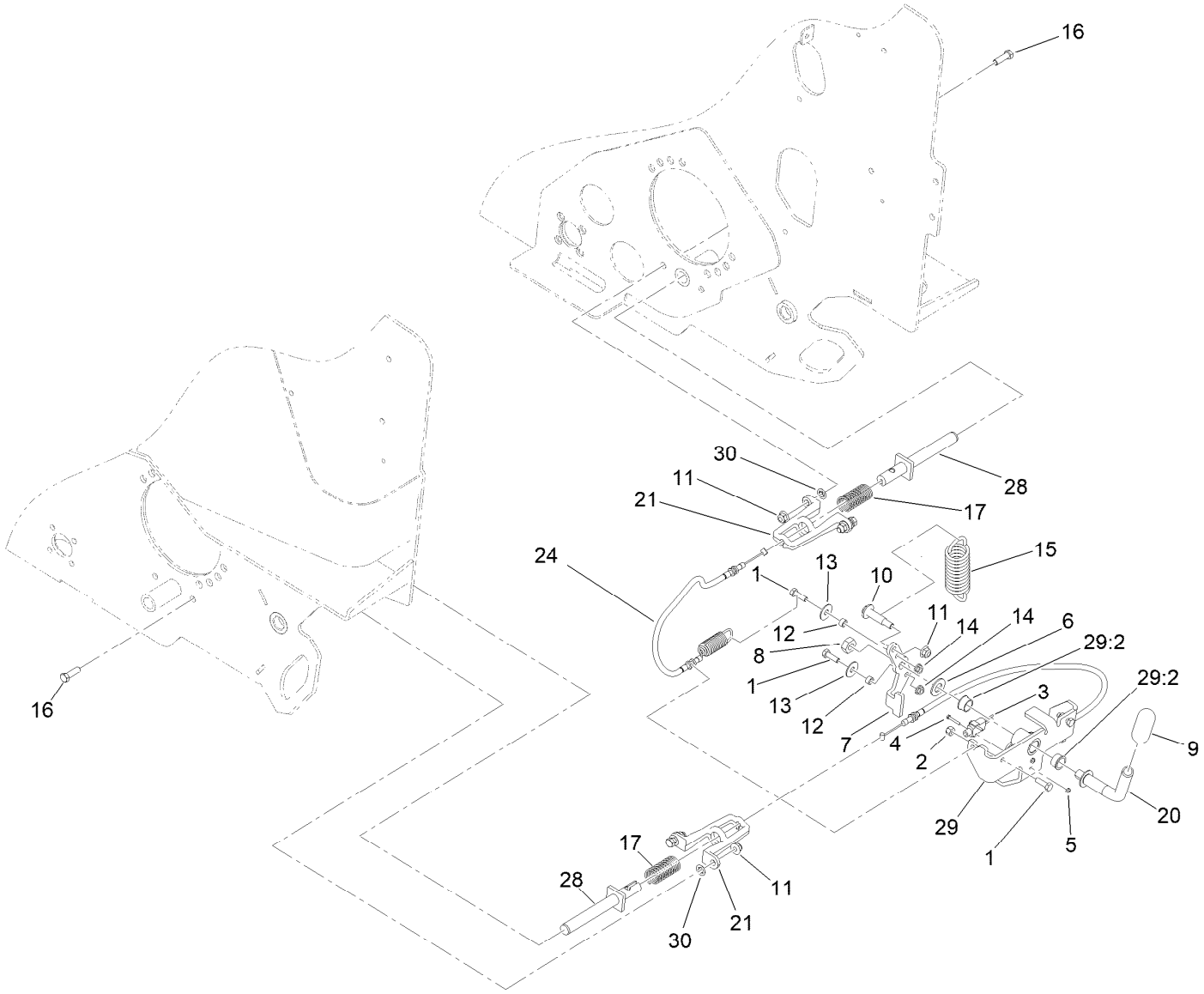

Parking Brake Assembly (continued)

Ref.	Part Number	Qty.	Description
1	322-5	4	Screw-HH
2	3296-29	2	Nut-Lock, NI
3	95-8900	1	Switch
4	32105-9	2	Screw-HH
5	3296-9	2	Nut-Hex
6	3256-27	1	Washer-Flat
7	138-0205-0P	1	Plate-Brake Linkage
8	3296-33	1	Nut-Lock, NI
9	110-1037	1	Grip-Handle
10	136-7198	1	Bolt-Shoulder
11	104-8301	5	Nut-HF, NI
12	85-9120	2	Spacer-Pivot, Tilt
13	52-2860	2	Washer
14	32128-20	2	Nut-HF
15	136-4787	1	Spring-EXT
16	323-7	4	Screw-HH
17	125-0344	2	Spring-Compression
20	133-0232	1	Lever-Brake
21	138-0207-03	2	Mount-Pin [black]
24	136-4789	2	Cable-Brake
28	145-3170	2	Brake Rod ASM
29	145-3171	1	Brake Bracket ASM
29:2	256-252	2	Bearing-Flange
30	107-3154	4	Nut-Push

Traction Hydraulic Assembly

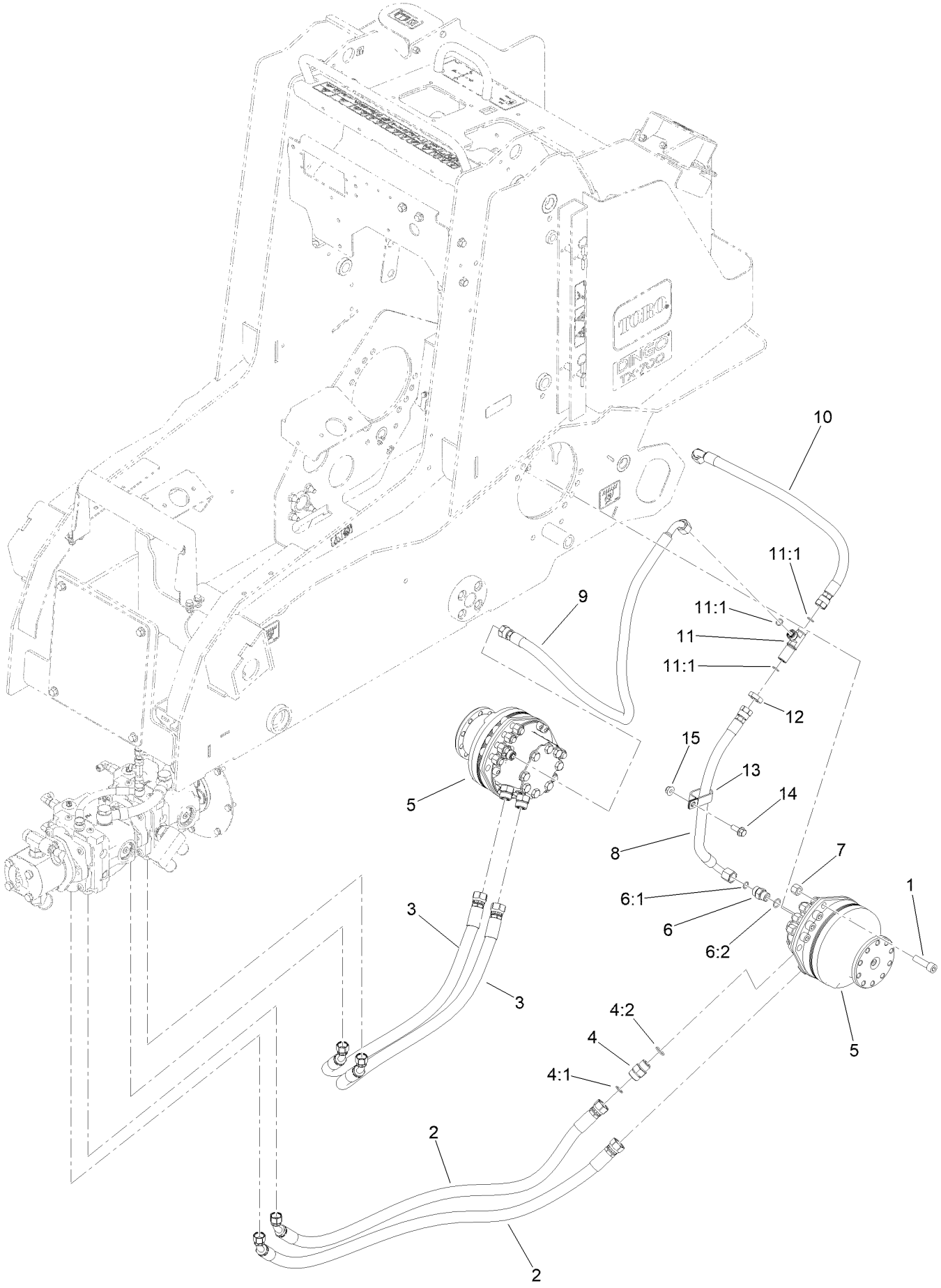

Traction Hydraulic Assembly (continued)

Ref.	Part Number	Qty.	Description
1	3296-23	16	Nut-Lock, NI
2	140-2874	2	Hose ASM-HYD
3	140-2913	2	Hose ASM-HYD
4	340-7	4	Fitting-Straight
4:1	237-65	1	O-Ring
4:2	237-80	1	O-Ring
5	145-4427	2	Wheelmotor ASM
6	340-4	2	Fitting-Straight
6:1	237-30	1	O-Ring
6:2	237-79	1	O-Ring
7	131-0661	16	Screw-HSH
8	145-3310	1	Hose ASM-HYD
9	145-3311	1	Hose ASM-HYD
10	145-3312	1	Hose ASM-HYD
11	340-121	1	Fitting-Tee
11:1	237-30	3	O-Ring
12	340-127	1	Nut-Bulkhead
13	2412-137	1	Clamp-R, Double
14	3234-42	1	Screw-HHF
15	104-8301	1	Nut-HF, NI

Radiator and Air Cleaner Assembly

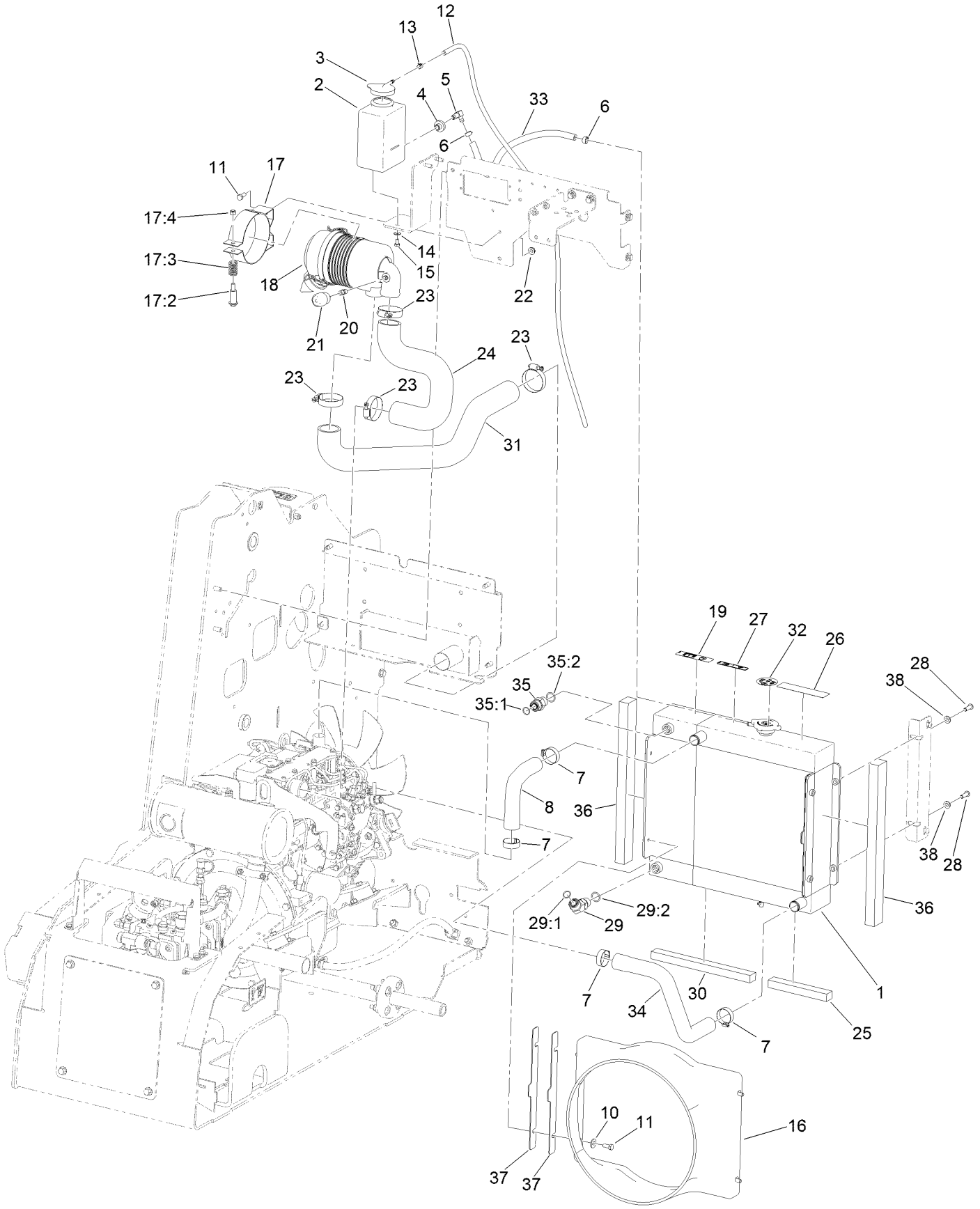

Radiator and Air Cleaner Assembly (continued)

Ref.	Part Number	Qty.	Description
1	140-2852	1	Rad/Oil Cooler
2	1-643163	1	Tank-Overflow
3	1-643164	1	Cap-Tank, Overflow
4	46-6560	1	Bushing
5	46-6550	1	Fitting-Elbow, 90 DEG
6	92-2379	2	Clamp-Hose
7	2412-34	4	Clamp-Hose
8	140-2858	1	Hose-Radiator, Upper
10	3256-3	4	Washer-Flat
11	322-3	6	Screw-HH
12	108-9698	1	Hose-Fuel
13	2412-80	1	Clamp-Hose
14	3256-22	2	Washer-Flat
15	321-2	2	Screw-HH
16	140-5745	1	Shroud-Fan
17	93-2191	1	Air Cleaner Mounting Band ASM
17:2	94-3653	1	Bolt
17:3	94-3654	1	Spring
17:4	33024-00	1	Nut-Lock, NI
18	117-9989	1	Air Cleaner ASM
19	115-4865	1	Decal-Fill, Radiator
20	105-4292	1	Nipple-Pipe
21	104-3563	1	Indicator
21:1	94-1416	1	Adapter-Indicator ●
22	32128-20	2	Nut-HF
23	2412-92	4	Clamp-Hose
24	140-2856	1	Hose-Air, Inlet
25	144-2132	1	Foam-Radiator Bottom LH
26	93-7814	1	Decal-Danger
27	93-6681	1	Decal-Warning, Fan
28	109-4872	4	Screw-HSH
29	340-14	1	Fitting-HYD, 45 DEG
29:1	237-65	1	O-Ring
29:2	237-80	1	O-Ring
30	144-2131	1	Foam-Radiator Bottom RH
31	144-6082	1	Hose-Air, Inlet
32	117-3276	1	Decal-Danger
33	110-3257	1	Hose-Fuel
34	140-2857	1	Hose-Radiator, Lower
35	340-7	1	Fitting-Straight
35:1	237-65	1	O-Ring
35:2	237-80	1	O-Ring
36	144-2130	2	Foam-Radiator Side
37	145-3326	4	Spacer-Radiator
38	3256-23	4	Washer-Plain

● Not illustrated

Air Cleaner Assembly No. 117-9989

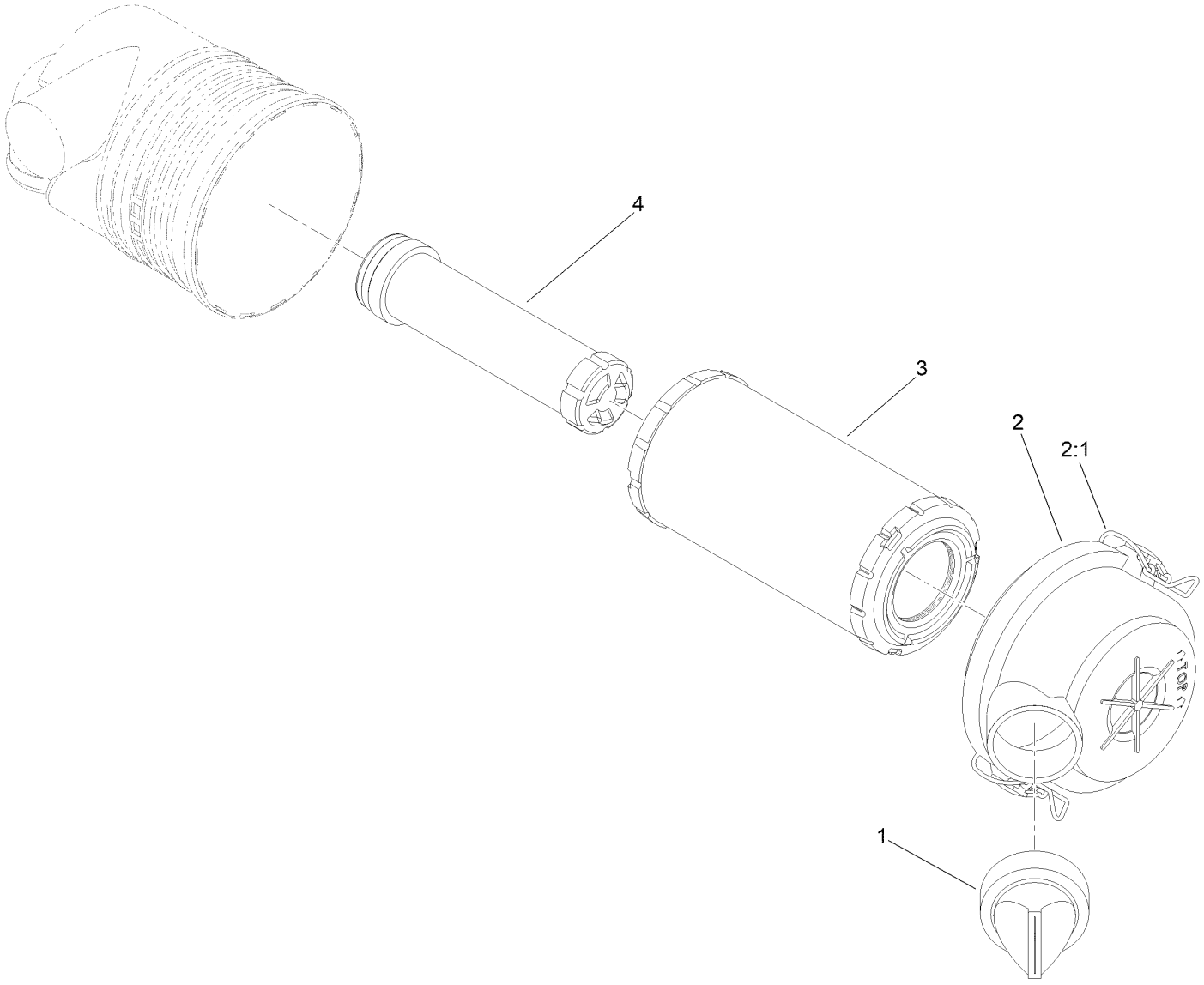

Air Cleaner Assembly No. 117-9989 (continued)

Ref.	Part Number	Qty.	Description
1	87-9400	1	Valve-Vacuator
2	94-3652	1	Cover ASM
2:1	1-643283	2	Latch-Cleaner, Air
3	108-3811	1	Filter-Air V-Twin HD
4	98-2982	1	Filter-Element, Safety

Engine and Pump Assembly

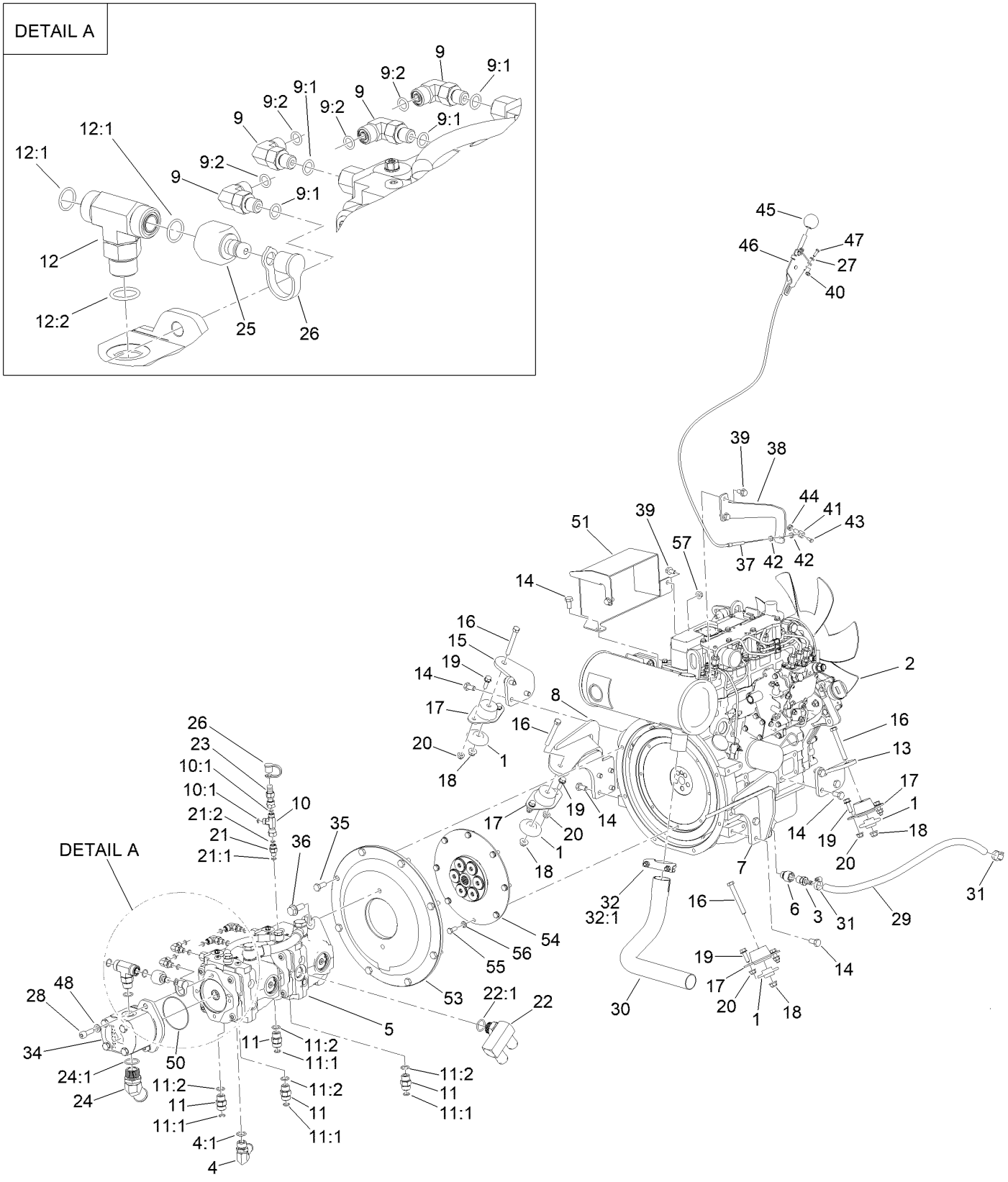

Engine and Pump Assembly (continued)

Ref.	Part Number	Qty.	Description
1	138-6462	4	Support-Isolator
2	145-3262	1	Engine-Yanmar 3Tnv80F-Nxdtr2
3	1-513200	1	Fitting,Male
4	87-8170	1	Fitting-90
4:1	237-80	1	O-Ring
5	145-3277	1	Pump - Tandem
5:1	132-6041	1	Seal Kit ●
5:1:1		2	Seal Kit ●■
5:2	132-6042	1	Spacer-Jet ●
5:2:1		4	Jet-1-Hc-M5-5.5 ●■
5:3	132-6045	1	Shaft Seal Kit ●
5:3:1		1	Shaft Seal Kit ●■
5:4	132-6047	1	Tandem Connection Pipe Kit ●
5:4:1		1	Tandem Connection Kit ●■
5:5	138-0781	1	Valve-Relief ●
5:6	140-5300	1	Hardware Kit ●
5:6:1		2	Bolt-Hex ●■
5:6:2		2	Washer ●■
5:6:3		1	O-Ring ●■
5:7	144-7490	1	Jet-Kit ●
5:8	144-7491	1	Flushing Valve-Kit ●
5:9	144-7363	1	Bolt Kit ●
5:9:1		4	Poclain P/N 4485 ●■
5:9:2		1	Poclain P/N 4670 ●■
5:9:3		1	Poclain P/N 4480 ●■
6	139-2218	1	Adaptor-STR
7	145-3341-03	1	Left Hand Mount [black]
8	145-3340-03	1	Right Hand Mount [black]
9	340-132	4	Fitting-Elbow, 90 DEG
9:1	237-78	1	O-Ring
9:2	237-21	1	O-Ring
10	340-151	1	Fitting-Tee
10:1	237-21	2	O-Ring
11	340-4	4	Fitting-Straight
11:1	237-30	1	O-Ring
11:2	237-79	1	O-Ring
12	340-93	1	Tee-Adapter
12:1	237-65	2	O-Ring
12:2	237-80	1	O-Ring
13	140-2771-03	1	Bracket-Engine Mount, Rear LH
14	33115-020	15	Screw-HH
15	140-2772-03	1	Bracket-Engine Mount, Rear RH
16	323-14	4	Screw-HH
17	120-6274	4	Mount-Engine
18	104-8301	4	Nut-HF, NI
19	3234-29	8	Screw-HHF
20	104-8300	8	Nut-HF, NI
21	340-92	1	Fitting-Straight
21:1	237-78	1	O-Ring
21:2	237-21	1	O-Ring
22	145-0621	1	Fitting
22:1	237-81	1	O-Ring
23	115-8886	1	Nipple-Test
24	136-6071	1	Fitting-45 Elbow
24:1	237-146	1	O-Ring
25	86-5860	1	Nipple
26	354-79	2	Cap-Dust
27	3256-51	2	Washer-Flat
28	AU862-10030	2	Screw-HSH
29	119-8562	1	Hose-Fuel
30	140-5731	1	Pipe-Exhaust
31	2412-36	2	Clamp-Hose
32	2112-6	1	Clamp-Muffler
32:1	3218-2	2	Nut-Hex Jam
34	140-3048	1	Pump-Hydraulic
35	33115-025	8	Screw-HH
36	137-4653	2	Screw-HHF
37	144-7483	1	Throttle Cable
38	147-9011	1	Bracket-Throttle Cable
39	33104-016	4	Screw-HHF
40	32149-7	2	Nut-Keps
41	98-9311	1	Swivel-Throttle
42	3220-1	2	Nut-Jam
43	25-8640	1	Screw-HH
44	3296-20	1	Nut-Lock, NI
45	233-42	1	Knob
46	108-9730	1	Lever-Control
47	3290-134	2	Screw
48	107-1413	2	Washer-Hardened
50	353-949	1	O-Ring
51	145-3176-03	1	Shield-Exhaust [black]
53	145-3210-0P	1	Cover-Flywheel
54	126-6531	1	Coupler-Flywheel
55	33114-020	8	Screw-HH
56	3253-4	8	Washer-Lock
57	33004-00	1	Nut-HF

● Not illustrated

■ Not serviced separately

Hydraulic Pump Assembly No. 140-3048

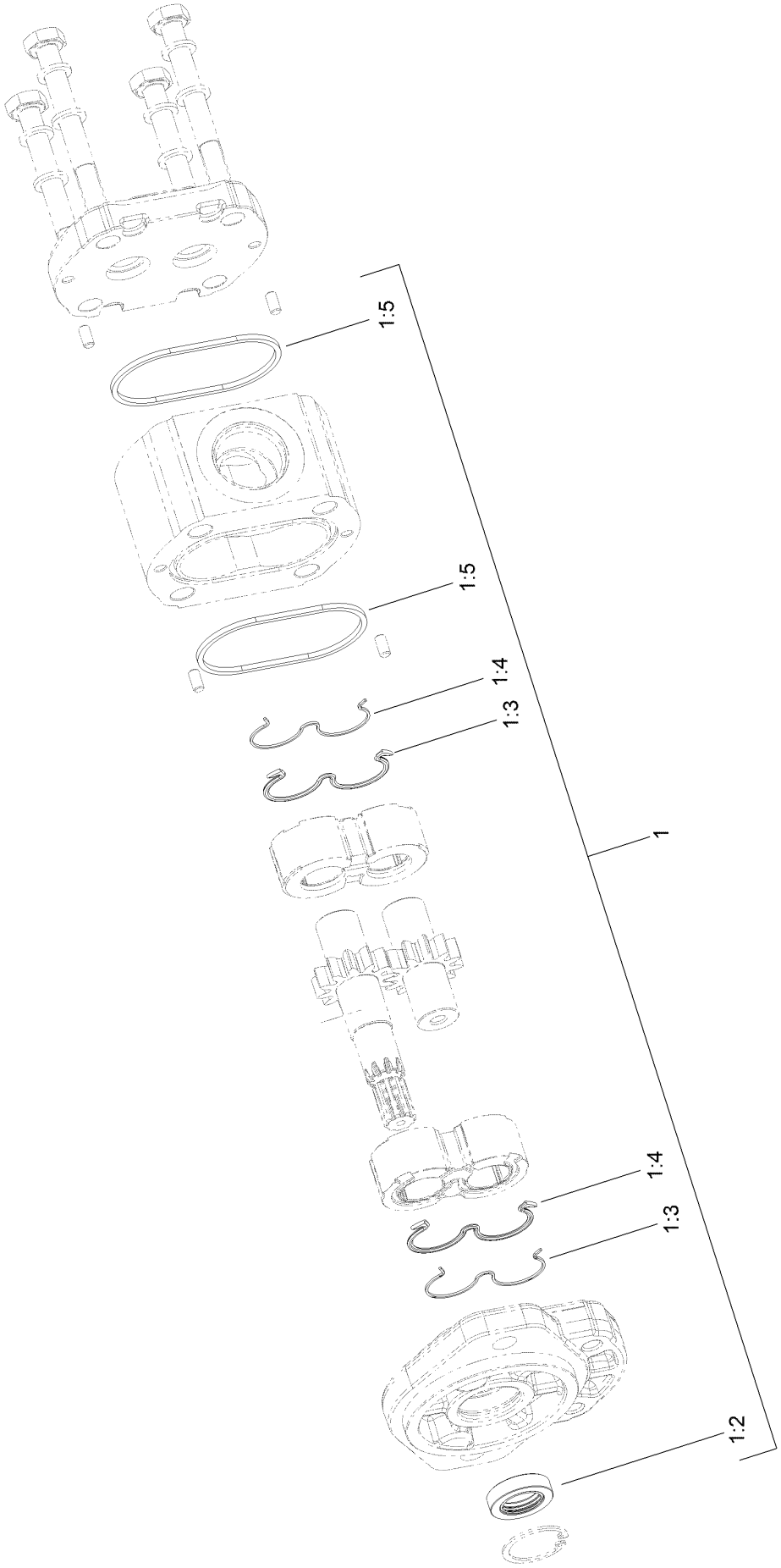

Hydraulic Pump Assembly No. 140-3048 (continued)

Ref.	Part Number	Qty.	Description
1	119-7135	1	Kit-Seal
1:2		1	Shaft Seal ●
1:3		2	Anti-Extrusion Seal ●
1:4		2	Seal ●
1:5		2	Seal Square Section ●

● Not serviced separately

Hydraulic Assembly

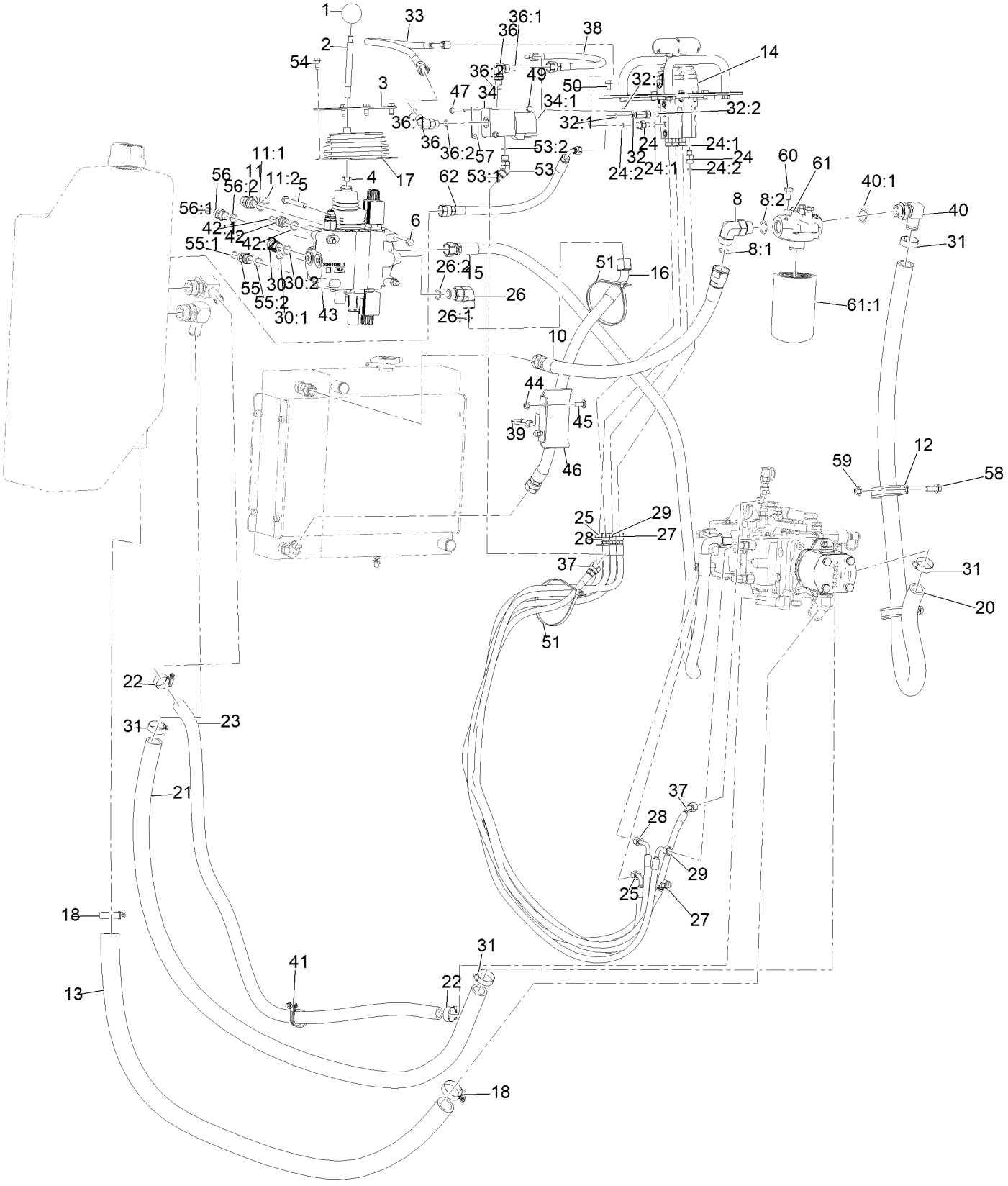

Hydraulic Assembly (continued)

Ref.	Part Number	Qty.	Description
1	233-21	1	Knob
2	108-4675	1	Shaft-Handle, Loader
3	144-7489-03	1	Ring-Boot
4	51-2070	1	Nut
5	323-15	3	Screw-HH
6	3296-39	3	Nut-Lock, NI
8	340-142	1	Fitting-Elbow, 90 DEG
8:1	237-58	1	O-Ring
8:2	237-81	1	O-Ring
10	140-3013	1	Hose ASM-HYD
11	340-98	1	Fitting-Elbow, 90 DEG
11:1	237-79	1	O-Ring
11:2	237-30	1	O-Ring
12	127-0516	2	Clamp-R, Double
13	140-3023	1	Hose-Return
14	140-2940	1	Traction Control ASM
15	140-3014	1	Hose-HYD ASM
16	140-3012	1	Hose ASM-HYD
17	144-2128	1	Boot-Control
18	2412-111	2	Clamp-Hose, W/Liner
20	145-3295	1	Hose-Return
21	140-3025	1	Hose-Return
22	2412-129	2	Clamp-Hose
23	140-3026	1	Hose-Return
24	340-92	5	Fitting-Straight
24:1	237-78	1	O-Ring
24:2	237-21	1	O-Ring
25	140-3015	1	Hose ASM-HYD
26	340-17	2	Fitting-Elbow, 90 DEG
26:1	237-65	1	O-Ring
26:2	237-80	1	O-Ring
27	140-3016	1	Hose ASM-HYD
28	140-3017	1	Hose ASM-HYD
29	140-3018	1	Hose ASM-HYD
30	340-101	1	Fitting-HYD, 45 DEG
30:1	237-30	1	O-Ring
30:2	237-79	1	O-Ring
31	2412-34	4	Clamp-Hose
32	340-140	1	Fitting-Tee
32:1	237-21	2	O-Ring
32:2	237-78	1	O-Ring
33	140-3019	1	Hose ASM-HYD
34	158-627	1	Solenoid Valve
34:1	217-770	1	Solenoid Coil
36	340-77	2	Fitting-Elbow, 90 DEG
36:1	237-22	1	O-Ring
36:2	237-42	1	O-Ring
37	140-3020	1	Hose ASM-HYD
38	140-3021	1	Hose ASM-HYD
39	32180-030	1	Clip-Tie
40	100-4202	1	Fitting-90
40:1	237-81	1	O-Ring
41	119-9037	1	Clamp-R
42	340-3	2	Fitting-Straight
42:1	237-22	1	O-Ring
42:2	237-79	1	O-Ring
43	144-4257	1	Loader Valve ASM,
43:1	106-7724	1	Joystick Kit ●
43:1:1	98-0668	3	Nut ●
43:1:2	106-7726	1	Pivot-Joystick ●
43:1:3	106-7727	1	Pin-Joystick ●
43:1:4	106-7728	1	End-Rod ●
43:1:5	42-9850	3	Washer-Lock, Spring ●
43:1:6	98-5828	3	Screw-HSH ●
43:1:7	106-7729	1	Bellow-Rubber ●
43:1:8	3290-379	1	Tie-Cable ●
43:1:9	106-7730	2	Joint-Joystick ●
43:1:10	106-7731	1	Holder-Articulated ●
43:2	106-7725	1	Seal-Joystick ●
43:3	106-7738	2	Seal-Valve, Spool ●
43:4	106-7737	1	Spool-Valve ●
43:5	106-7736	1	Spool-Valve ●
43:6	132-6031	1	Valve-Relief, Main ●
43:7	353-988	2	Plug-Hex ●
43:7:1	237-79	1	O-Ring ●
43:8	106-7734	3	Valve-Relief ●
43:9	106-7719	2	Seal-Valve ●
43:10	106-7732	1	Valve Spring Kit ●
43:11	106-7733	1	Detent Spring Kit ●
43:12	132-6032	1	Joint-SAE 8 ●
43:13	132-6033	1	Plug ●
44	104-8300	2	Nut-HF, NI
45	3230-10	2	Bolt-CARR
46	140-5738-03	1	Plate-Hose
47	321-18	2	Screw-HH
49	104-7201	3	Nut-HF, NI
50	3234-4	1	Screw-HHF
51	3334-945	2	Tie-Cable
53	340-87	1	Fitting-Elbow, 45 DEG
53:1	237-22	1	O-Ring
53:2	237-42	1	O-Ring
54	126-4424	4	Screw-Shoulder
55	145-4333	1	Valve-Check
55:1	237-79	1	O-Ring
55:2	237-30	1	O-Ring
56	340-4	1	Fitting-Straight
56:1	237-30	1	O-Ring
56:2	237-79	1	O-Ring
57	145-3260	1	Plate, Backing
58	3234-42	2	Screw-HHF
59	104-8301	2	Nut-HF, NI
60	33115-020	4	Screw-HH
61	93-2242	1	Oil Filter ASM
61:1	75-1310	1	Filter-HYD
62	145-3293	1	Hose ASM-HYD

● Not illustrated

Traction Control Assembly No. 140-2940

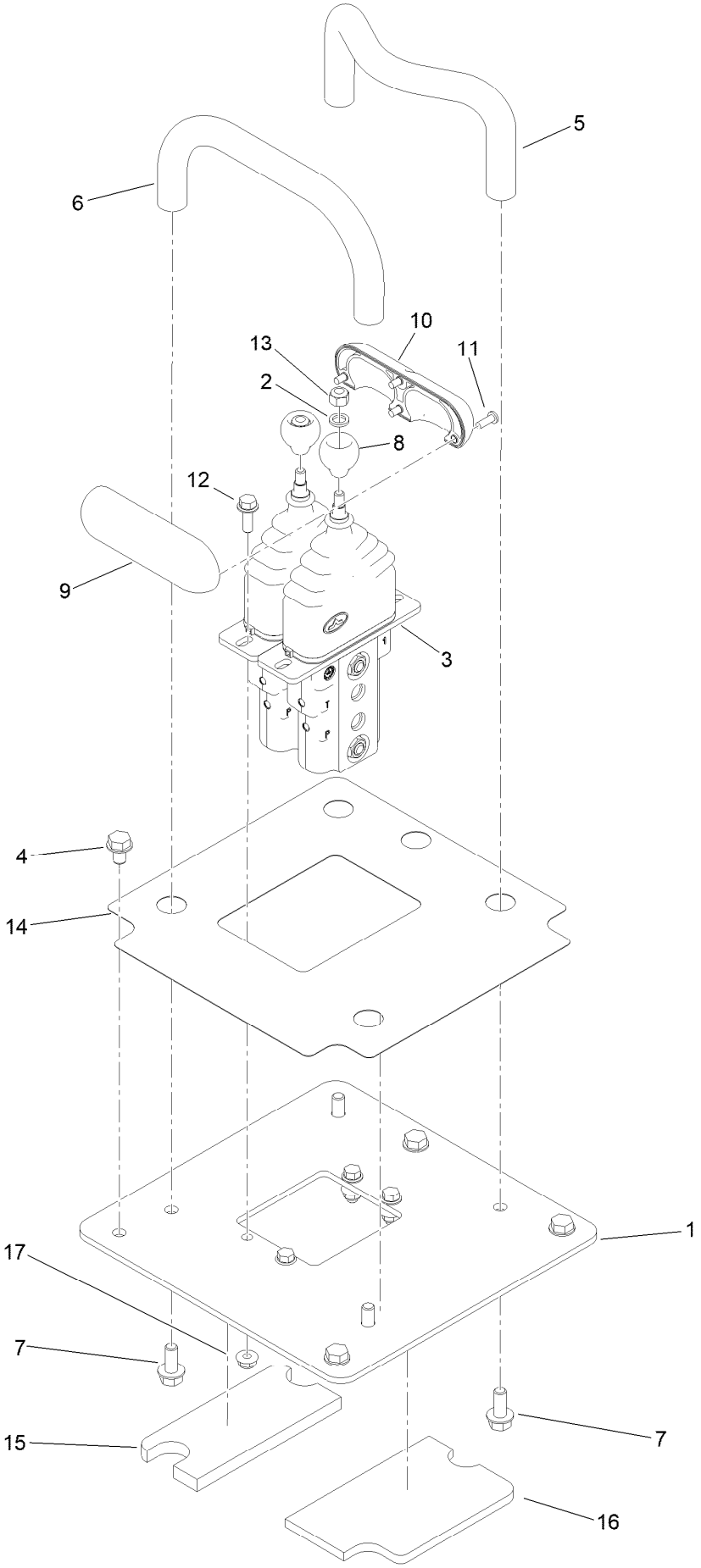

Traction Control Assembly No. 140-2940 (continued)

Ref.	Part Number	Qty.	Description
1	140-5749-01	1	Panel-Cover
2	75-5470	2	Spacer-Bearing
3	145-3279	1	Valve-Control (Traction)
4	700057	4	Screw-HWH
5	138-0791	1	Bar-Reference
6	145-4400	1	Bar-Reference
7	3234-5	4	Screw-HHF
8	130-7723	2	Ball-Traction
9	130-7692	1	Handle-Control
10	131-9162	1	Handle-Traction
11	94-6961	4	Screw
12	115-5103	4	Screw-HHF
13	3296-42	2	Nut-Lock, NI
14	145-3242	1	Decal-Traction
15	132-8415	1	Foam-Shield, Heat
16	145-3241	1	Foam-Shield, Heat
17	104-7201	4	Nut-HF, NI

Control Valve Assembly No. 145-3279

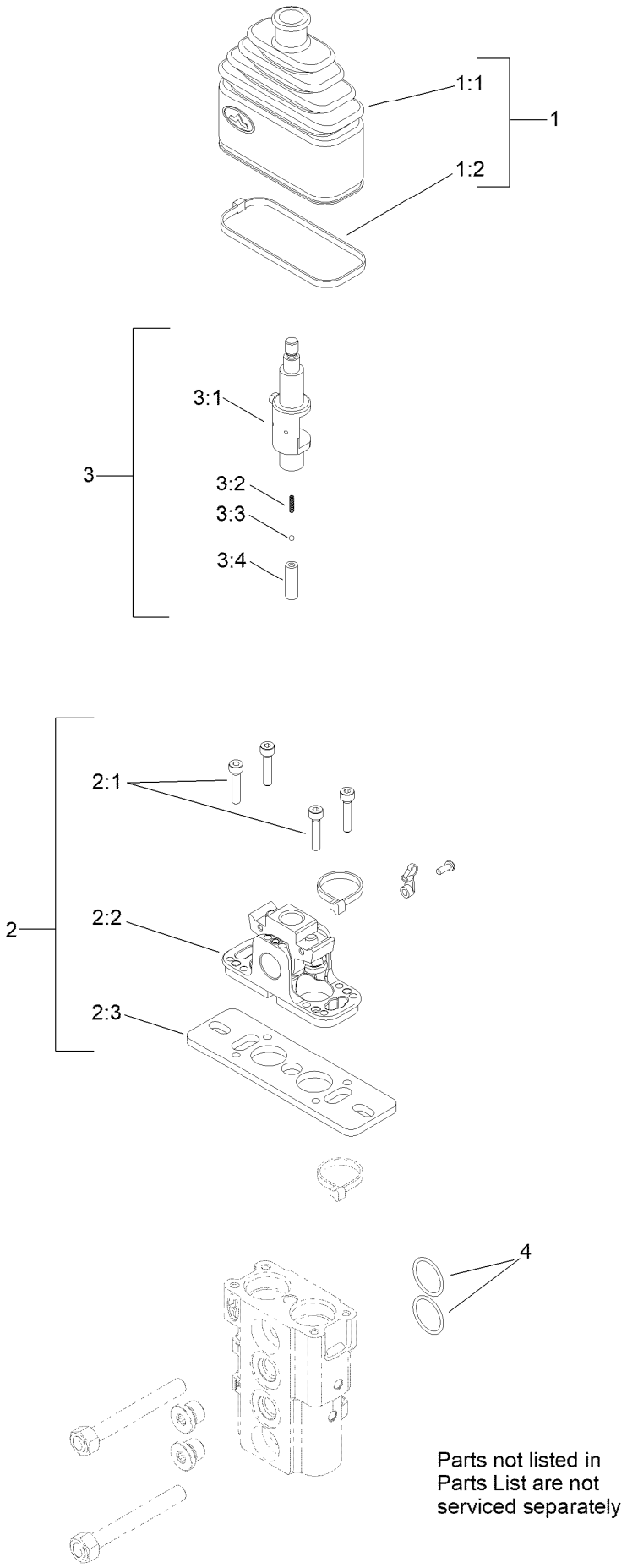

Parts not listed in Parts List are not serviced separately

Control Valve Assembly No. 145-3279 (continued)

Ref.	Part Number	Qty.	Description
1	132-6034	2	Bellow Kit
1:1		1	Bellow-Rubber ●
1:2		1	Tie-Cable ●
2	132-6036	2	Fulcrum Kit
2:1		4	Screw ●
2:2		1	Support Kit ●
2:3		1	Plate-Mounting ●
3	132-6037	2	Switch Holder Lever Kit
3:1		1	Lever-Holder, Switch ●
3:2		1	Spring-Return ●
3:3		1	Sphere ●
3:4		1	Holder-Spring ●
4	100-7246	2	O-Ring

● Not serviced separately

Loader Arm Assembly

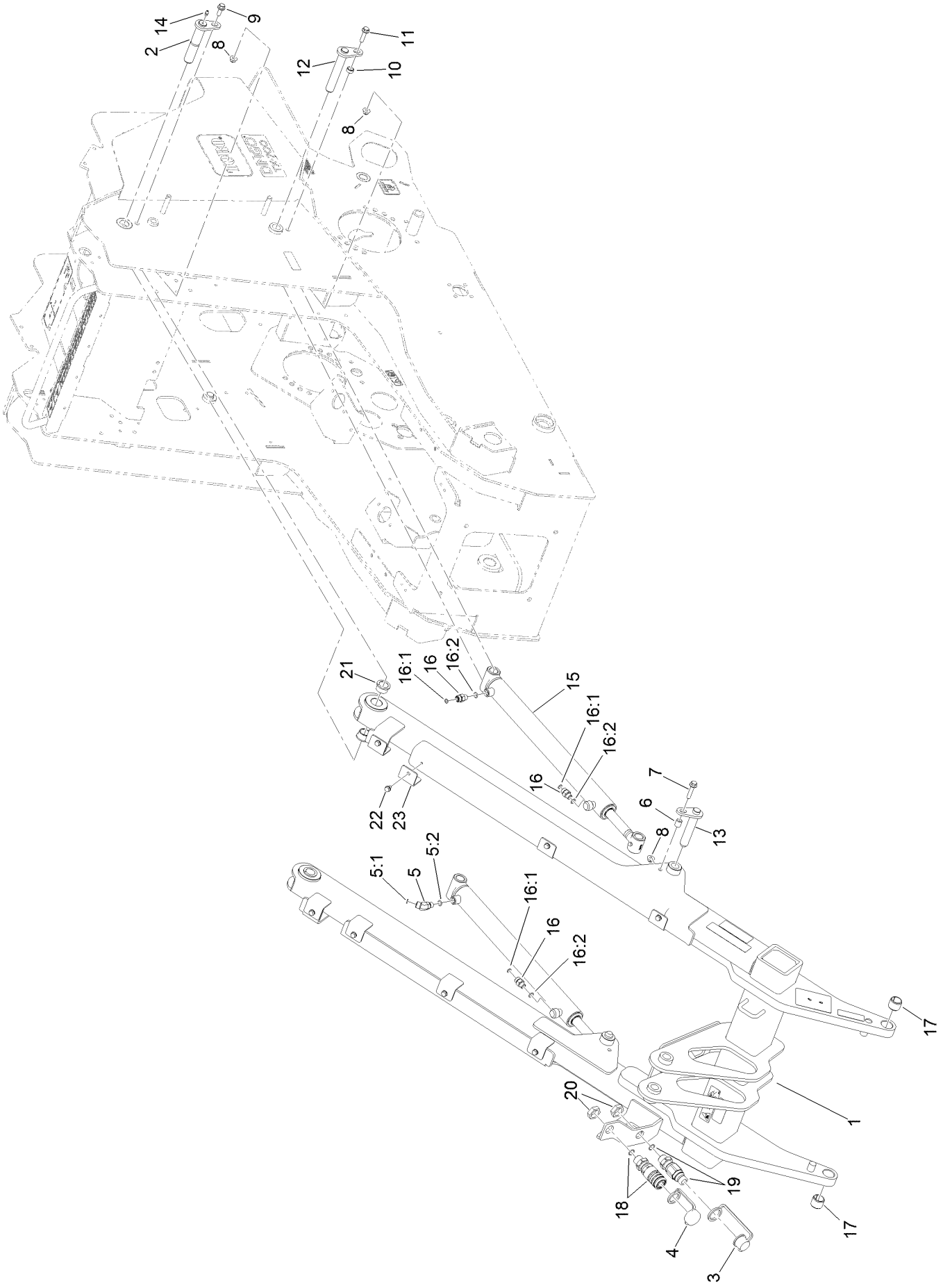

Loader Arm Assembly (continued)

Ref.	Part Number	Qty.	Description
1	145-3225	1	Loader Arm ASM
2	139-7270	2	Pin-Flag
3	100-8815	1	Cap-Dust, Nipple
4	100-8816	1	Cap-Dust, Coupler
5	340-87	1	Fitting-Elbow, 45 DEG
5:1	237-22	1	O-Ring
5:2	237-42	1	O-Ring
6	136-1462	2	Spacer
7	3234-19	2	Screw-HHF
8	104-8301	6	Nut-HF, NI
9	3234-42	2	Screw-HHF
10	99-4201	2	Tube-Spacer
11	3234-18	2	Screw-HHF
12	140-2927	2	Pivot Pin ASM (Welded)
13	140-2925	2	Pivot Pin ASM (Welded)
14	302-5	2	Fitting-Grease
15	140-2974	2	Cly-HYD
16	340-2	3	Fitting-Straight
16:1	237-22	1	O-Ring
16:2	237-42	1	O-Ring
17	98-4871	2	Bushing-Tension
18	139-4798	1	Coupler ASM,Bulkhead,
19	139-4799	1	Coupler ASM,Bulkhead,
20	340-74	2	Nut-Lock, Bulkhead
21	112-1626	4	Bushing-Flange
22	700057	8	Screw-HWH
23	145-3304	8	Plate-Retainer, Hose

Loader Arm Assembly No. 145-3225

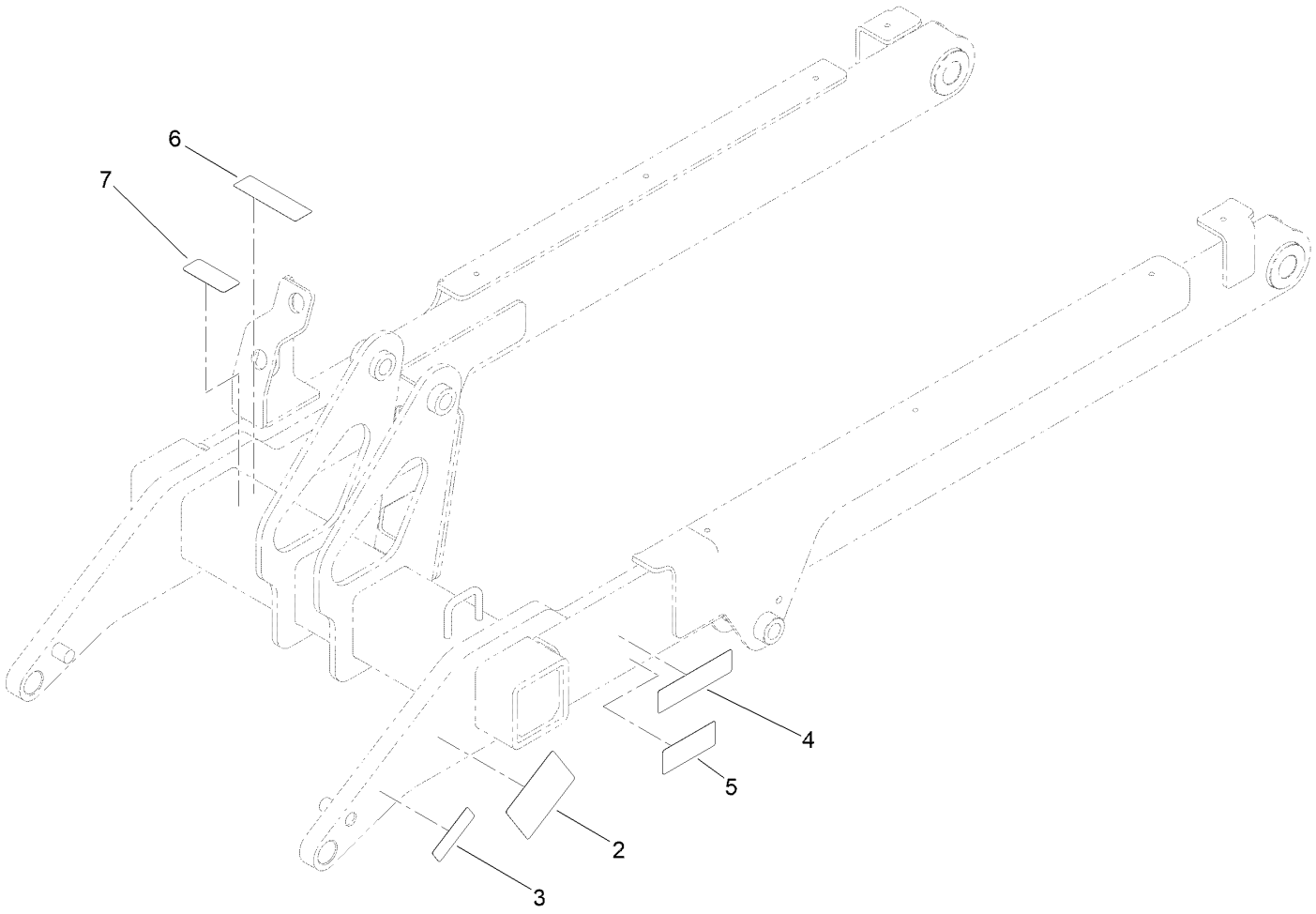

Loader Arm Assembly No. 145-3225 (continued)

Ref.	Part Number	Qty.	Description
2	145-3252	2	Decal - Warning, Bucket
3	120-0625	2	Decal-Warning
4	139-1158	2	Decal-Warning
5	139-1159	2	Decal-Warning
6	115-4855	1	Decal-Caution
7	139-1173	1	Decal-Warning

Hydraulic Cylinder Assembly No. 140-2974

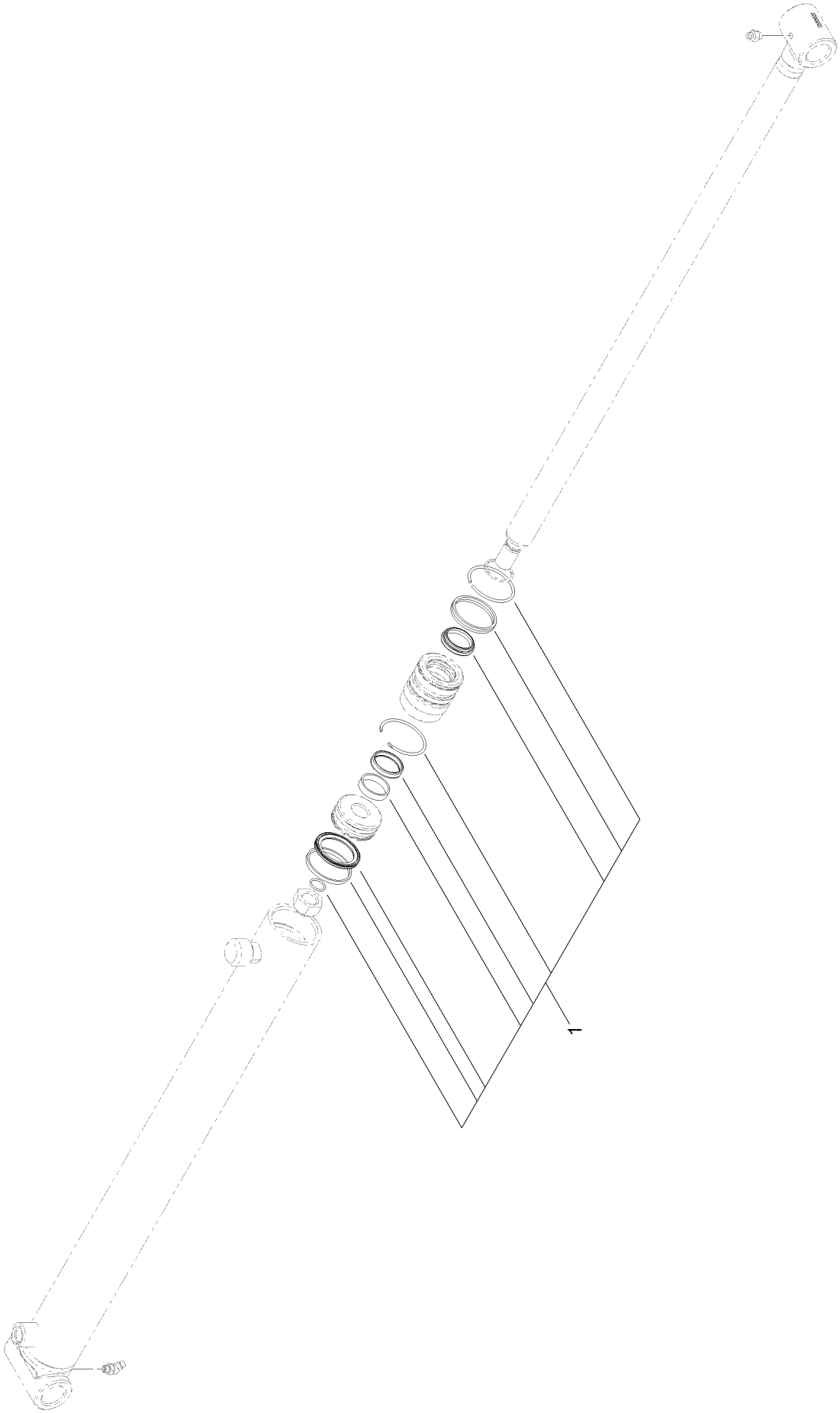

Hydraulic Cylinder Assembly No. 140-2974 (continued)

Ref.	*Part Number*	*Qty.*	*Description*
1	144-7487	1	Kit-Seal, Hydraulic CYL

Loader Arm Hydraulic Assembly

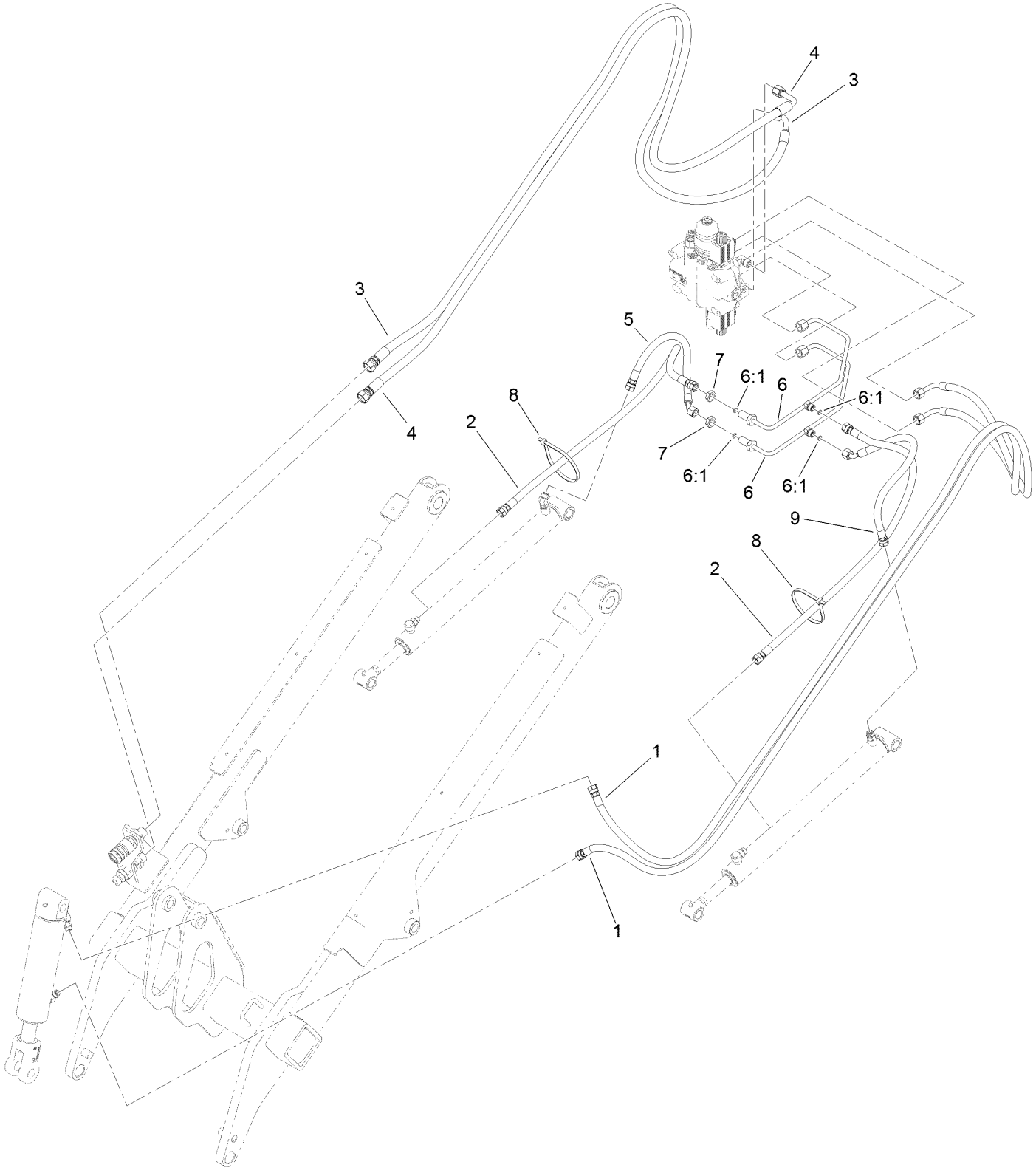

Loader Arm Hydraulic Assembly (continued)

Ref.	Part Number	Qty.	Description
1	140-3008	2	Hose ASM-HYD
2	140-5732	2	Hose ASM-HYD
3	140-3010	1	Hose ASM-HYD
4	140-3011	1	Hose ASM-HYD
5	140-2892	1	Hose ASM-HYD
6	140-3007	2	Hydraulic Tube ASM
6:1	237-22	2	O-Ring
7	340-70	2	Nut-Lock
8	3334-945	2	Tie-Cable
9	145-3329	1	Hose ASM-HYD

Quick Attach Assembly

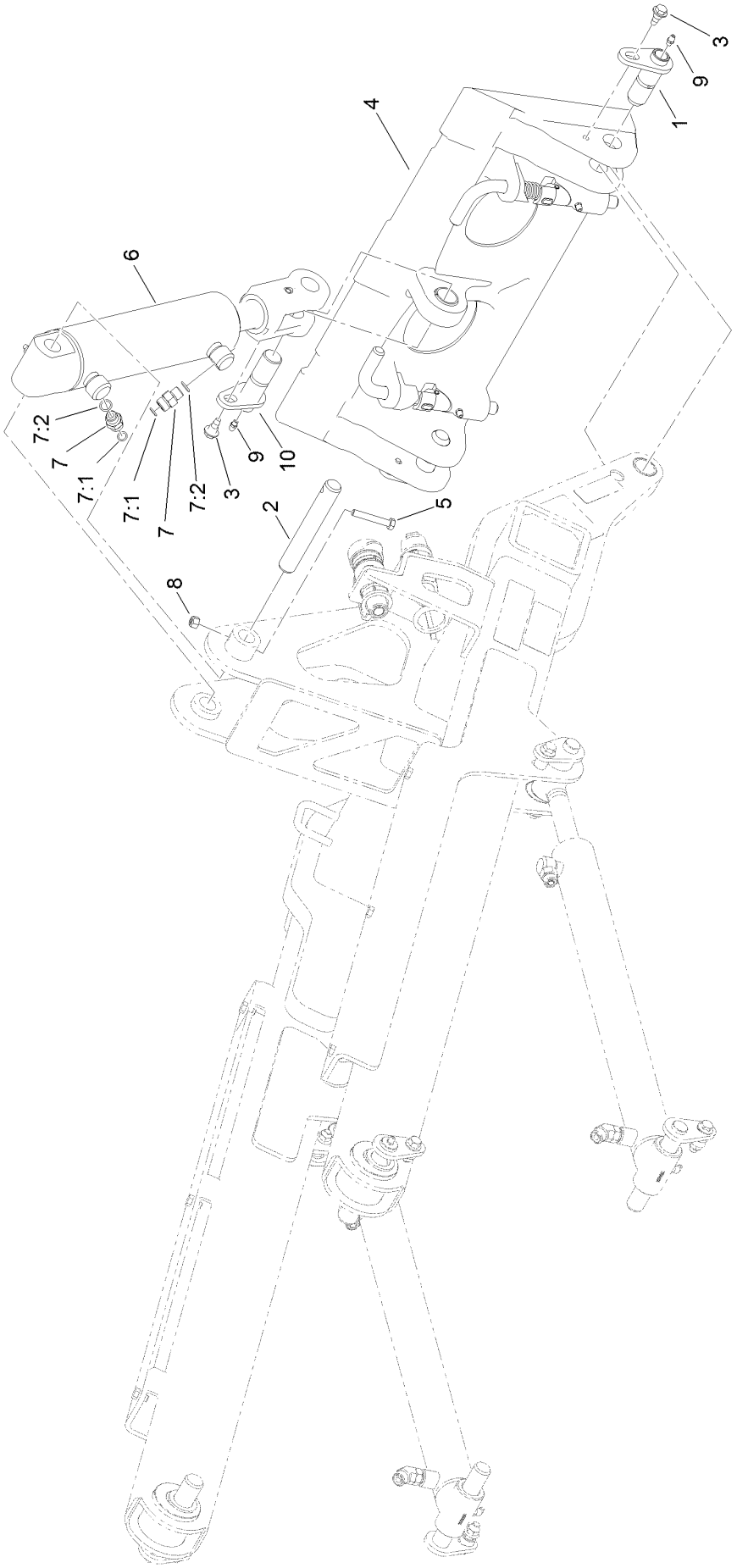

Quick Attach Assembly (continued)

Ref.	Part Number	Qty.	Description
1	130-5222	2	Pin-Pivot
2	104-2849	1	Pin-Locking
3	99-5105	3	Screw-Shoulder
4	132-8418	1	Quick Attach ASM
5	322-10	1	Screw-HH
6	145-3202	1	HYD CYL ASM
7	340-2	2	Fitting-Straight
7:1	237-22	1	O-Ring
7:2	237-42	1	O-Ring
8	3296-29	1	Nut-Lock, NI
9	302-5	3	Fitting-Grease
10	145-3203	1	Pivot Pin ASM

Quick Attach Assembly No. 132-8418

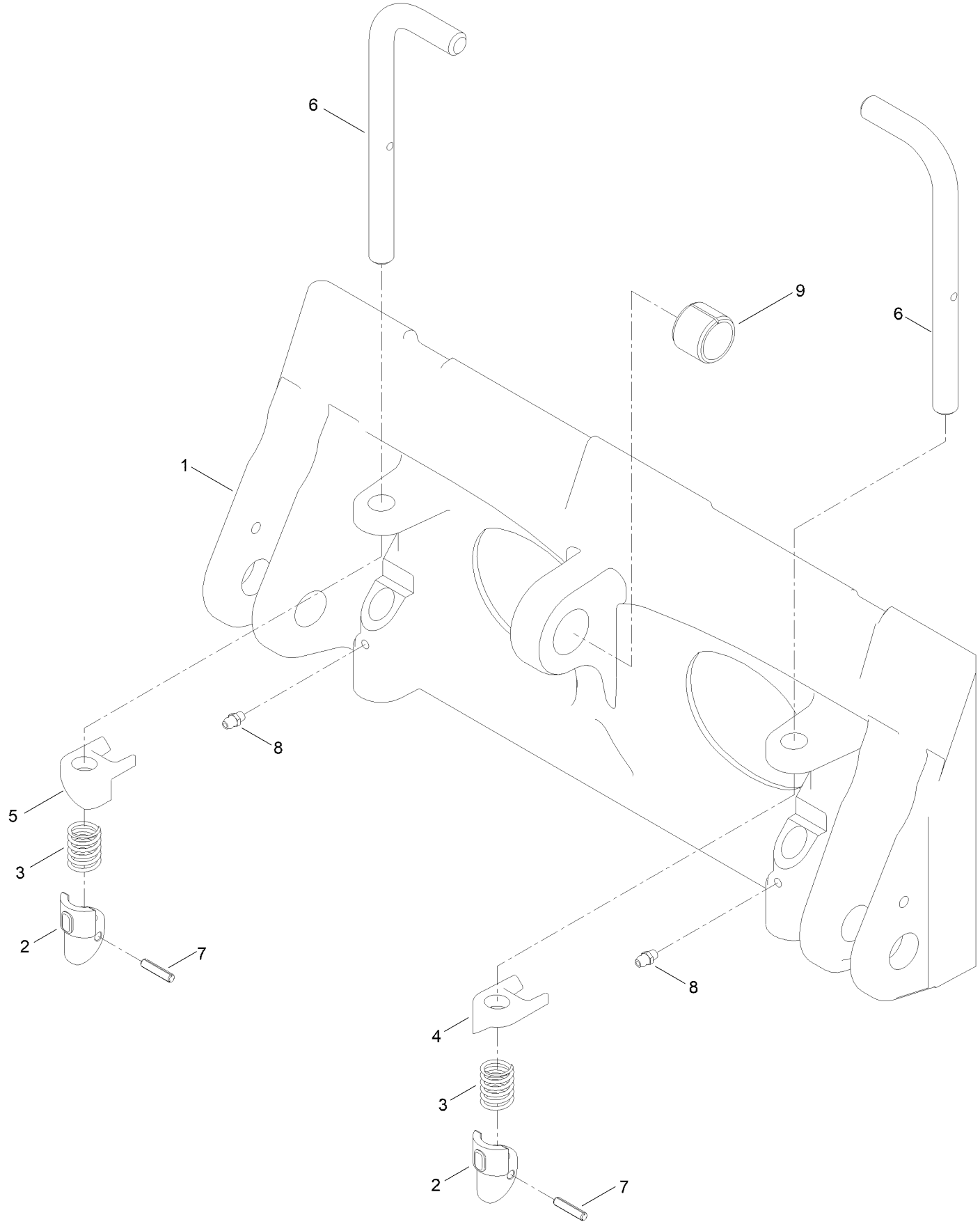

Quick Attach Assembly No. 132-8418 (continued)

Ref.	Part Number	Qty.	Description
1	130-7708-03	1	Mount-Qtach
2	105-0246	2	Cam
3	98-4694	2	Spring-Compression
4	104-5909	1	Stop-RH
5	104-5903	1	Stop-LH
6	132-8419	2	Pin-Locking
7	3285-1	2	Pin-Grooved
8	302-5	2	Fitting-Grease
9	98-4871	1	Bushing-Tension

Hydraulic Cylinder Assembly No. 145-3202

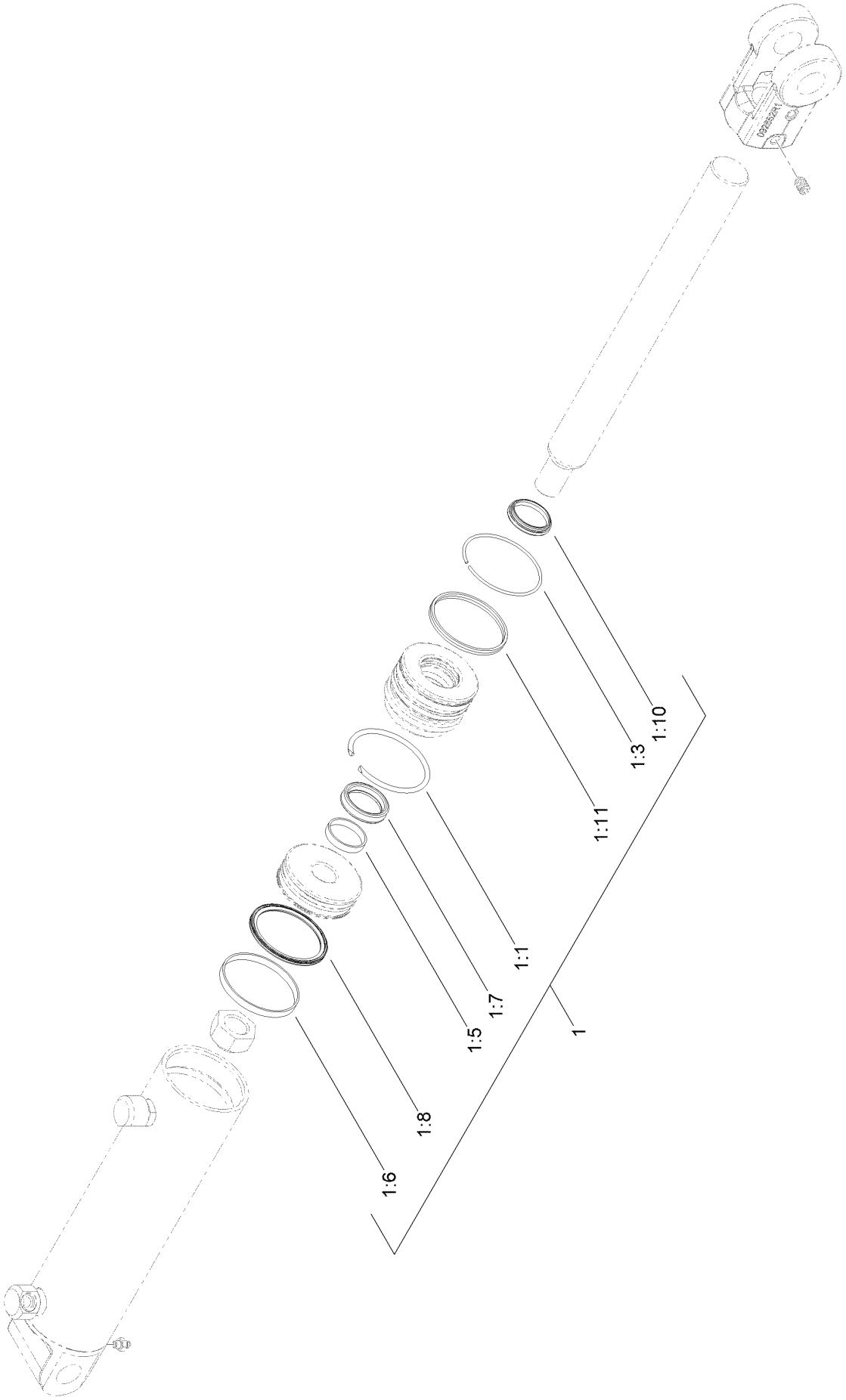

Hydraulic Cylinder Assembly No. 145-3202 (continued)

Ref.	Part Number	Qty.	Description
1	145-3227	1	Kit-Seal, Hydraulic CYL
1:1		1	Retaining Ring Internal 2.7 ■
1:2		2	Retaining Ring Remov Tool 2 ●■
1:3		1	Retaining Ring External 2.7 ■
1:4		1	Clamp Gear 2.75" ●■
1:5		1	Wear Ring 1.50-1.38-0.250 ■
1:6		1	Wear Ring 2.75-2.63-0.250 ■
1:7		1	Seal Zurcon U-Cup Ru9 1.38 ■
1:8		1	Seal Zurcon Wynseal 2.75"-I ■
1:9		1	Seal Zurcon Glyd Ring P 2.7 ●■
1:10		1	Seal Wiper 1.38 Snap In Da2 ■
1:11		2	Seal Dual 2.75 ■
1:12		1	Seal Kit Stuff Wire Rng Rep ●■
1:13		1	Seal Kit Stuff Tss Seals ●■

● Not illustrated

■ Not serviced separately

Fuel Assembly

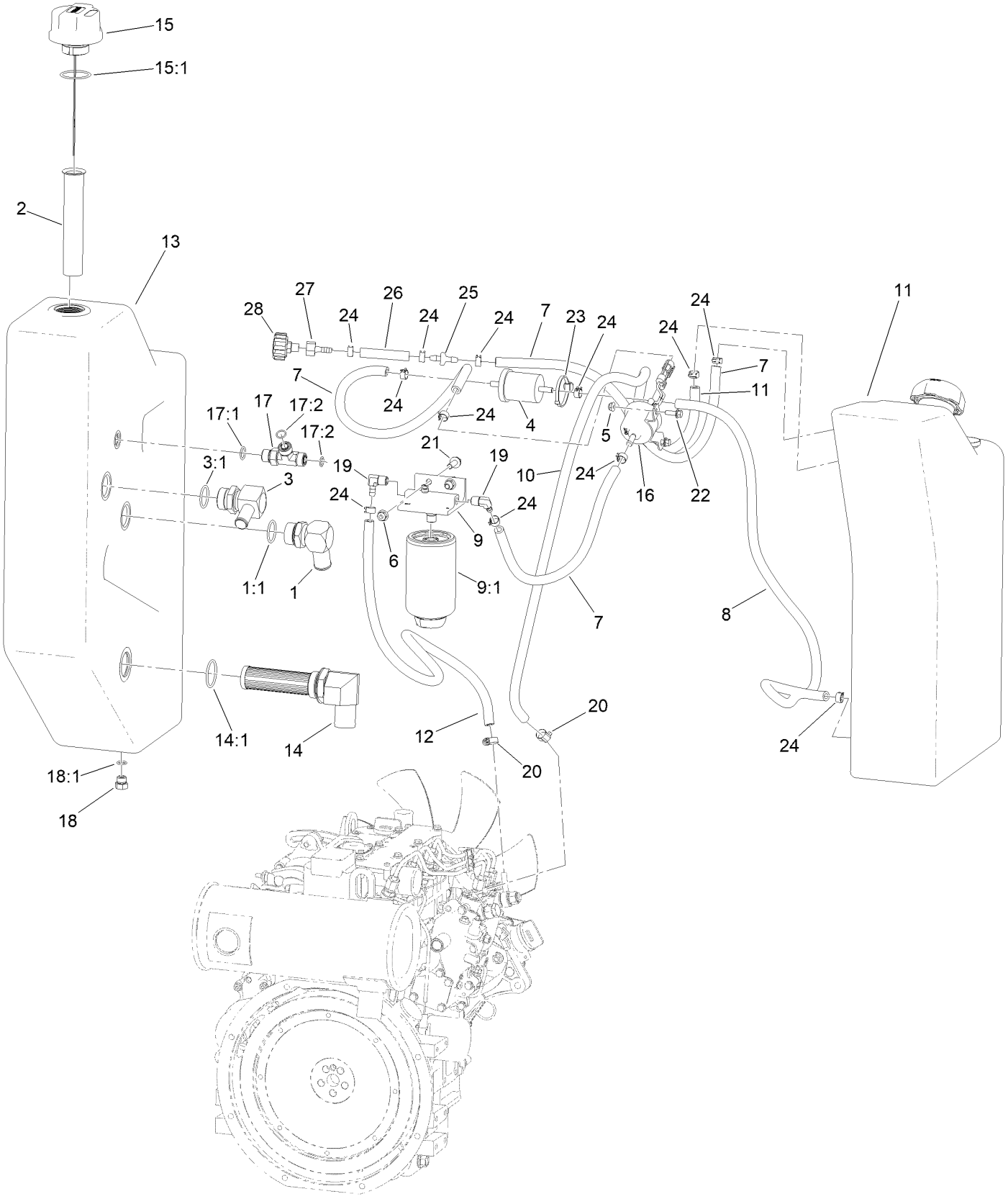

Fuel Assembly (continued)

Ref.	Part Number	Qty.	Description
1	23-8910	1	Stem-Barb-90
1:1	237-146	1	O-Ring
2	61-2790	1	Filter-Screen
3	98-0971	1	Fitting-Elbow, 90
3:1	237-117	1	O-Ring
4	98-7612	1	Filter-Fuel
5	104-7201	2	Nut-HF, NI
6	104-8300	2	Nut-HF, NI
7	108-3284	3	Hose-Fuel
8	109-0309	1	Hose-Fuel
9	110-9044	1	Separator-Filter
9:1	110-9049	1	Filter-Spin On, Fuel/Water
10	130-4346	1	Hose-Fuel
11	140-5762	1	Tank ASM, LH
12	140-5774	1	Hose-Fuel
13	144-6096	1	Tank-Hydraulic
14	145-0622	1	Strainer Fitting ASM
14:1	237-101	1	O-Ring
15	145-0642	1	Cap-Filler, Breather
15:1	237-101	1	O-Ring
16	145-3154	1	Pump-Fuel, Electric
17	340-109	1	Fitting-Tee
17:1	237-79	1	O-Ring
17:2	237-30	2	O-Ring
18	353-508	1	Plug-HH
18:1	237-42	1	O-Ring
19	353-781	2	Fitting-HYD, 90
20	2412-108	2	Clamp-Worm
21	3234-17	2	Screw-HHF
22	3234-4	2	Screw-HHF
23	32180-030	1	Clip-Tie
24	92-2379	12	Clamp-Hose
25	99-5000	1	Valve-Check, Fuel
26	112-6388	1	Hose-Fuel
27	354-95	1	Fitting-Straight
28	68-6150	1	Breather

Fuel Tank Assembly No. 140-5762

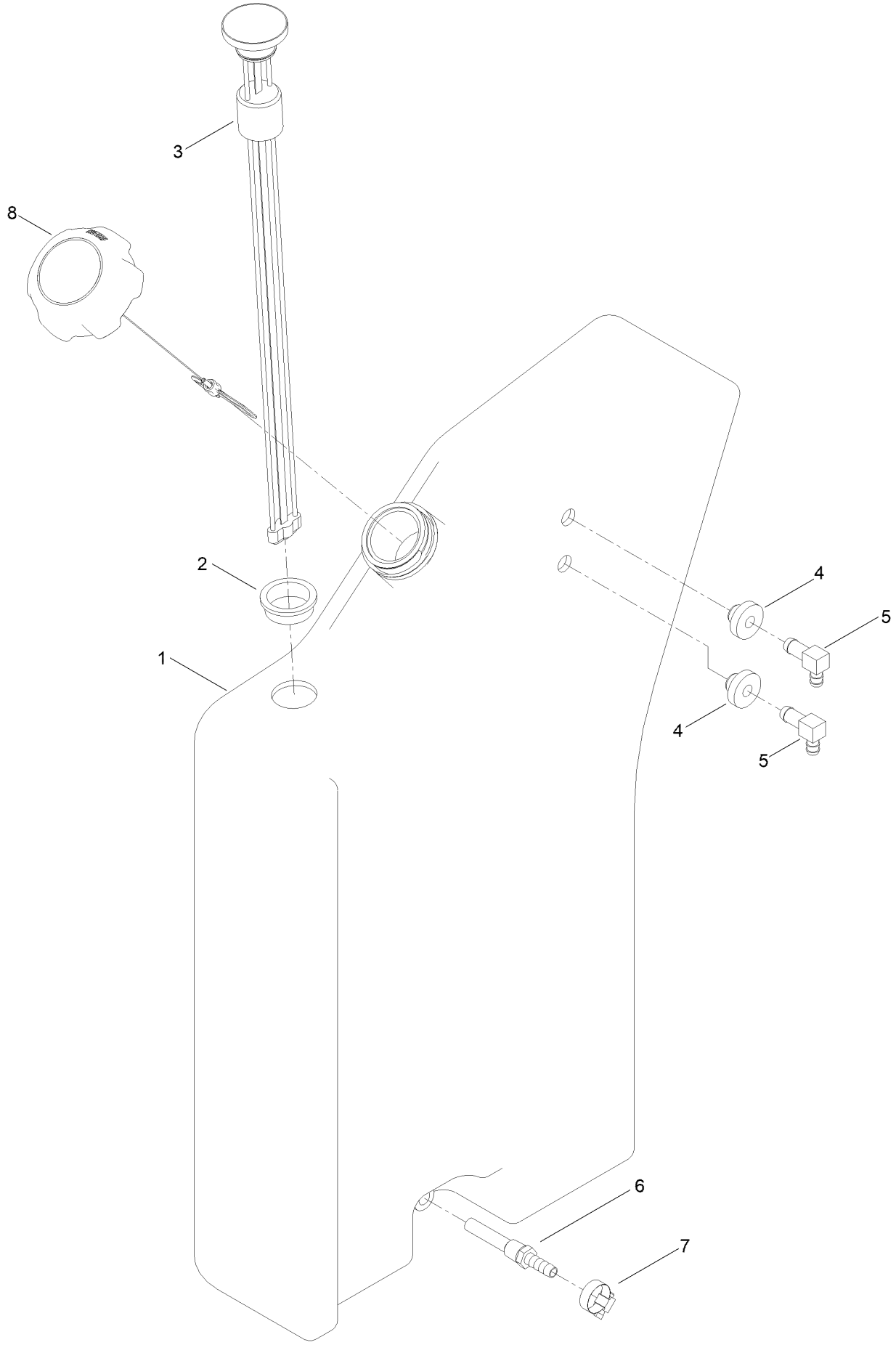

Fuel Tank Assembly No. 140-5762 (continued)

Ref.	Part Number	Qty.	Description
1	125-3709	1	Fuel Tank ASM
2	95-8972	1	Grommet
3	104-5603	1	Gauge-Level, Fuel
4	46-6560	2	Bushing
5	46-6550	2	Fitting-Elbow, 90 DEG
6	112-6374	1	Fitting-Strainer
7	2412-36	1	Clamp-Hose
8	130-7567	1	Cap-Diesel,

Hood and Manual Tube Assembly

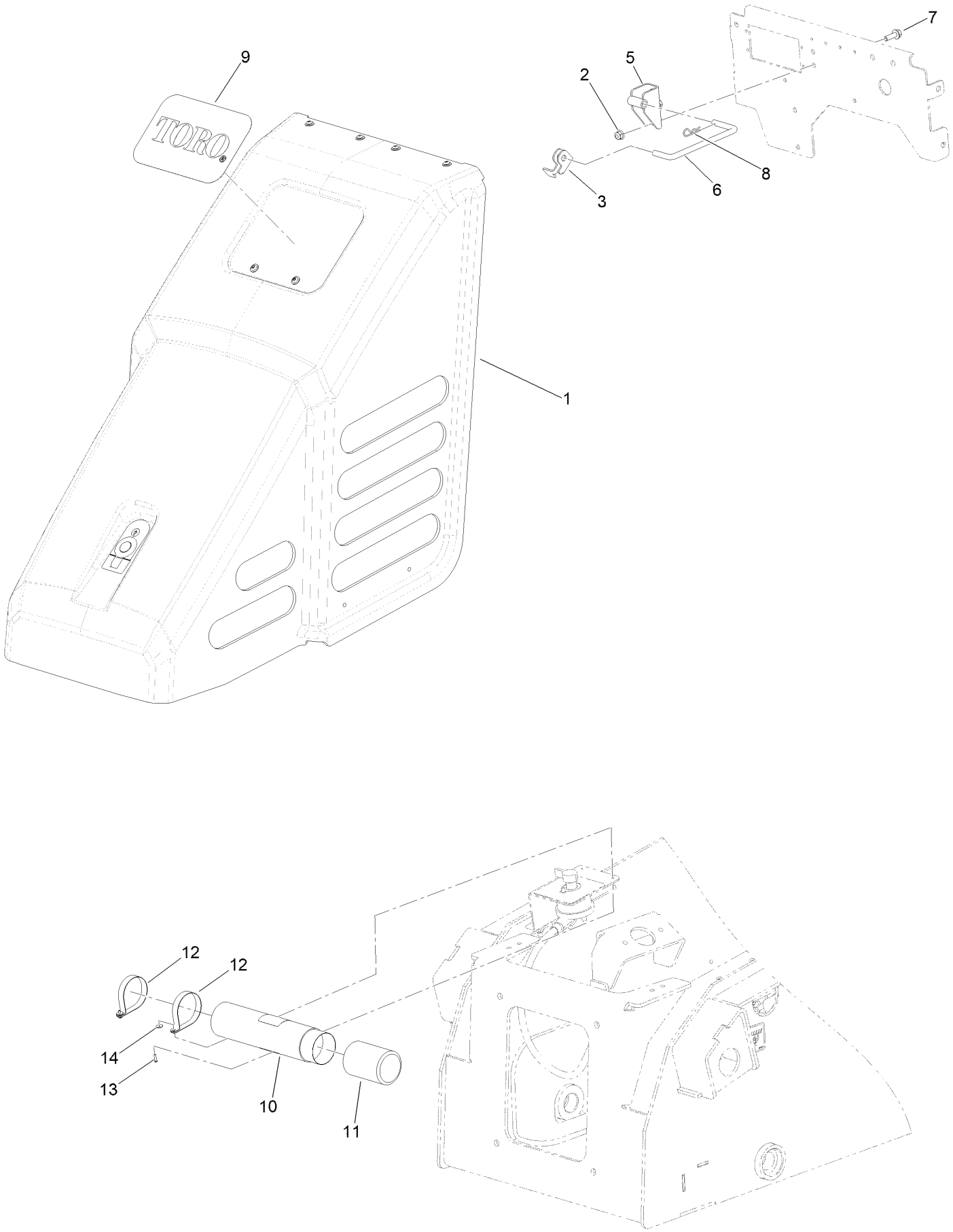

Hood and Manual Tube Assembly (continued)

Ref.	Part Number	Qty.	Description
1	140-2936	1	Hood ASM
2	104-8300	2	Nut-HF, NI
3	115-0714	1	Bracket-Latch, Locking
5	144-6089-0P	1	Bracket ASM Rod
6	144-6091	1	Rod-Support,Hood
7	3234-17	2	Screw-HHF
8	3290-250	1	Pin-Cotter
9	92-1242	1	Decal
10	104-7050	1	Tube-Manual
11	104-7048	1	Cap-Housing
12	2412-120	2	Clamp-R
13	3269-17	2	Rivet-Pop
14	3269-10	2	Washer-Back

Hood Assembly No. 140-2936

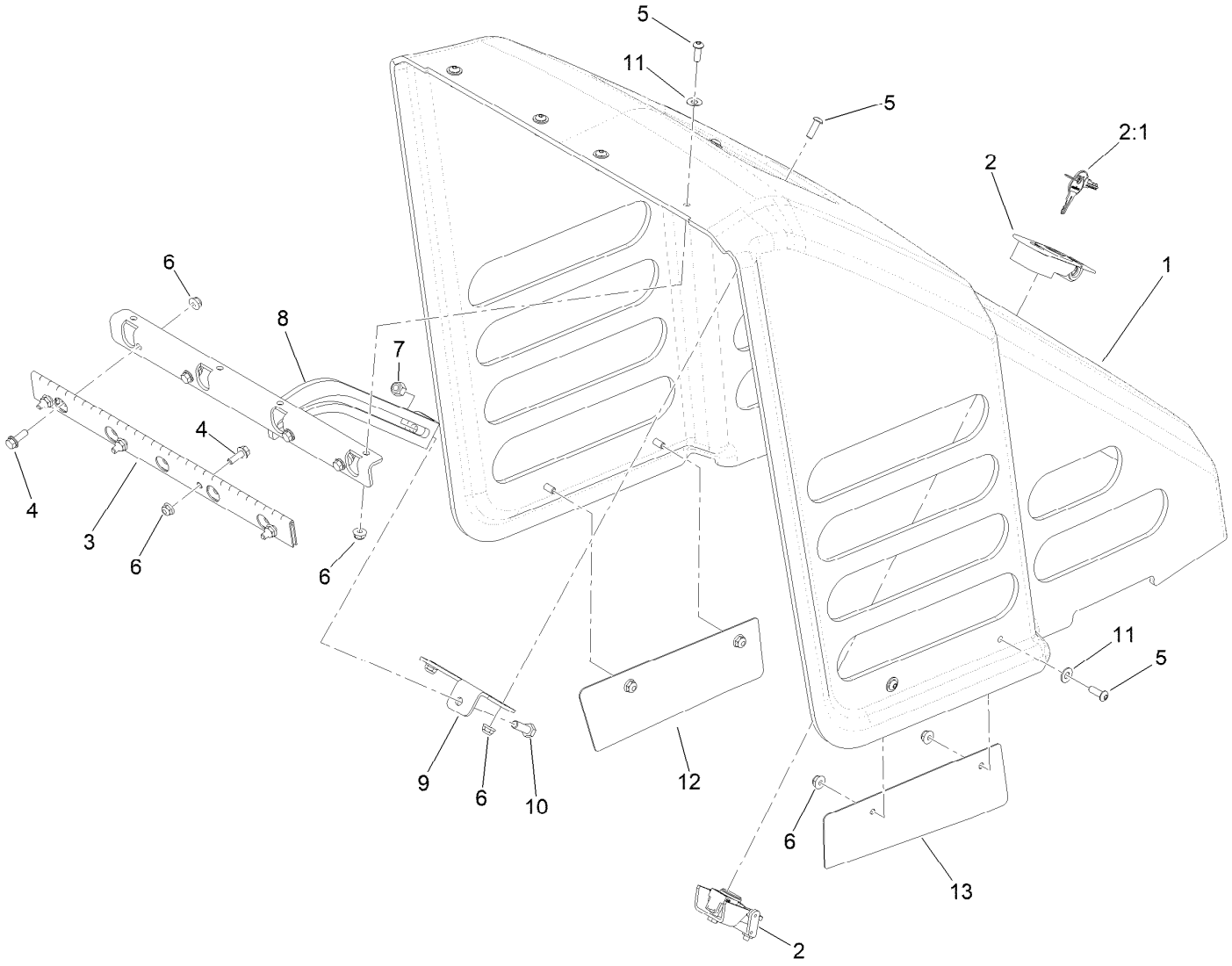

Hood Assembly No. 140-2936 (continued)

Ref.	Part Number	Qty.	Description
1	145-3251	1	Hood
2	144-4364	1	Latch-Compression, Locking
2:1	145-4488	1	Keys-Latch
3	140-2953	1	Hinge-Hood
4	115-5103	8	Screw-HHF
5	3274-69	10	Screw-HSBH
6	104-7201	18	Nut-HF, NI
7	3296-29	1	Nut-Lock, NI
8	144-7454-03	1	Bracket-Slot Hood
9	145-3330-0P	1	Bracket-Rod
10	322-5	1	Screw-HH
11	3256-1	10	Washer-Flat
12	145-3302-0P	1	Hood-Retainer,LH
13	145-3313-0P	1	Hood-Retainer,RH

Platform Assembly

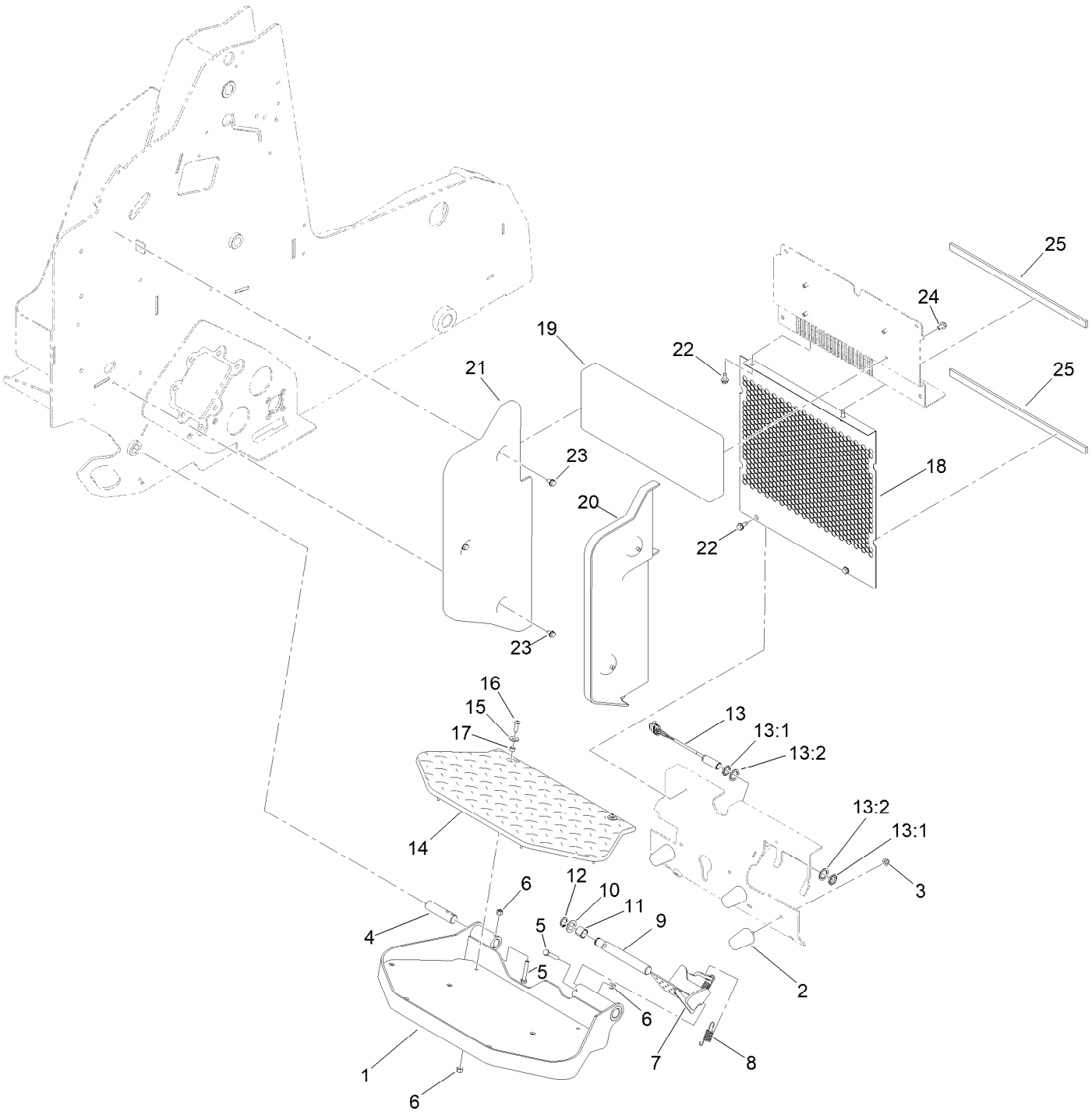

Platform Assembly (continued)

Ref.	Part Number	Qty.	Description
1	144-2124-03	1	Platform ASM [black]
2	110-5070	3	Bumper
3	104-8300	3	Nut-HF, NI
4	125-3749	1	Pin-Cylinder
5	322-10	2	Screw-HH
6	3296-29	4	Nut-Lock, NI
7	144-2118-03	1	Aux Pedal ASM, [black]
8	137-6189	2	Spring-Extension
9	144-2115	1	Pin-Platform
10	9202574	1	Washer-Flat
11	94-9609	1	Bushing-Straight
12	32120-93	1	Ring-Retaining
13	115-5300	1	Proximity Switch ASM
13:1	117-3207	2	Nut-Hex
13:2	117-3208	2	Washer-Lock, Internal Tooth
14	144-2116	1	Mat-Platform
15	3256-3	2	Washer-Flat
16	109-4872	2	Screw-HSH
17	85-9120	2	Spacer-Pivot, Tilt
18	140-5781-03	1	Screen-Radiator
19	144-6059	1	Cushion-Pad
20	144-2113	1	Cover-Right
21	144-2114	1	Cover-Left
22	32144-70	4	Screw-HWHTF
23	700057	5	Screw-HWH
24	3234-7	4	Screw-HHF
25	145-3276	2	Pad-Rubber

Electrical Assembly

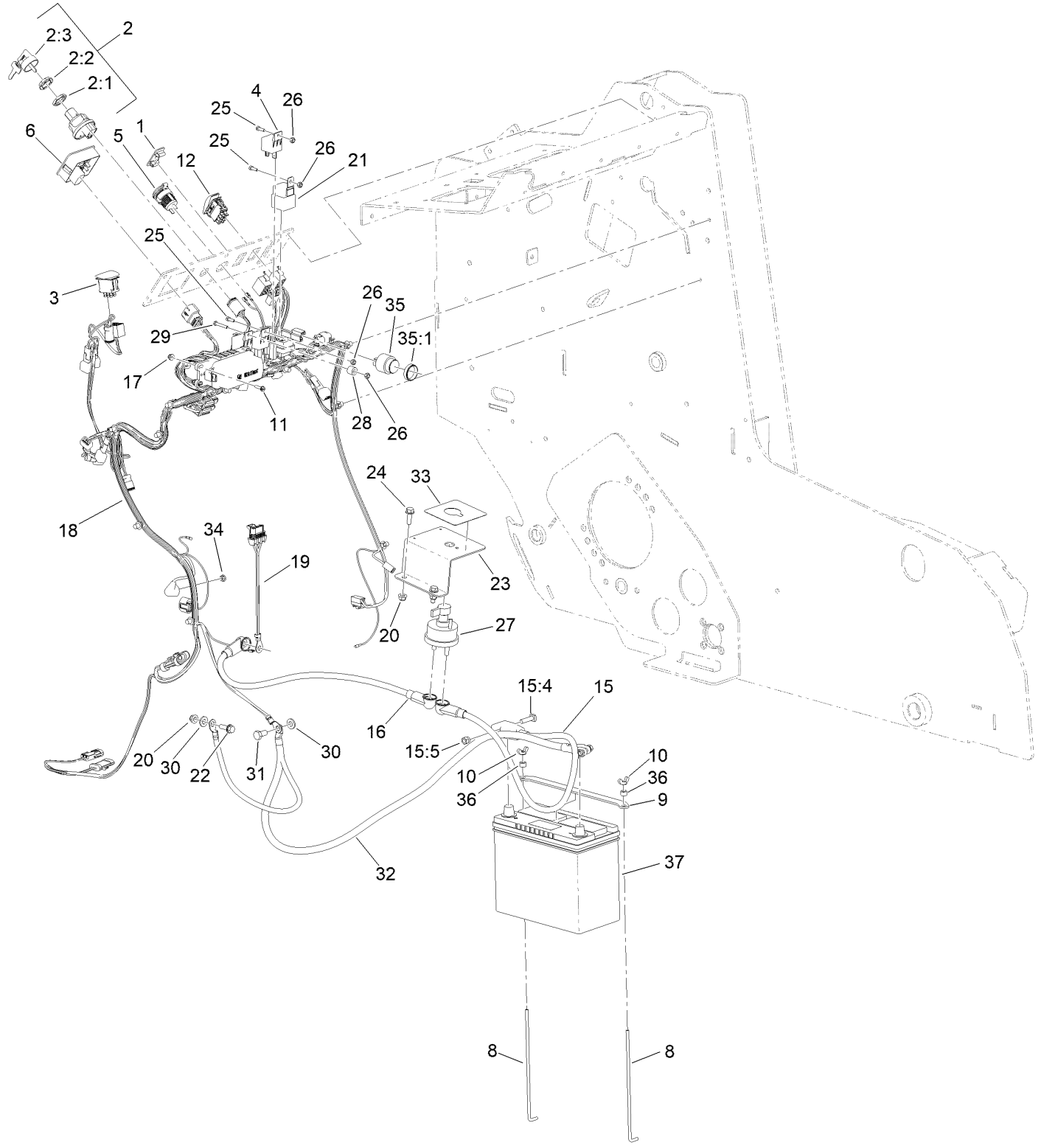

Electrical Assembly (continued)

Ref.	Part Number	Qty.	Description
1	99-7420	1	Plug-Hole
2	121-5159	1	Switch-Ignition
2:1	121-5160	1	Nut-Hex
2:2	122-2704	1	Nut-Face, M22 (Plastic)
2:3	121-5162	1	Set-Key, Ignition
3	100-1535	1	Switch-Rocker, (On)-Off-(On)
4	99-7435	3	Relay
5	109-9376	1	Receptacle-12V
6	130-7635	1	Module-Hour Meter
8	136-5756	2	Rod-Hold Down, Battery
9	136-5755-03	1	Strap-Hold Down, Battery
10	1-803038	2	Wingnut
11	32105-13	4	Screw-HWH
12	100-8072	1	Switch-Rocker, On-None-(On)
15	122-2825	1	Cable-Battery, Rd ASM
15:4	32180-109	1	Bolt-Battery Clamp, 5/16-18 Unc
15:5	32180-108	1	Nut-Hex Shoulder
16	122-2826	1	Cable-Battery, Rd ASM
17	120-4578	4	Nut-HF
18	122-2177	1	Harness-Wire, Tx700
19	99-3441	1	Harness-Wire, Fusible Link
20	104-8300	3	Nut-HF, NI
21	99-7430	1	Relay-Mini
22	3234-29	1	Screw-HHF
23	140-2938-03	1	Switch Bracket
24	3234-17	2	Screw-HHF
25	3290-134	3	Screw
26	3296-2	4	Nut-Lock, NI
27	AUR52278	1	Switch-Disconnect, Master
28	93-1144	1	Spacer - Fuel Tank
29	3290-360	1	Screw-HH
30	100-4852	2	Washer-Hardened
31	33115-020	1	Screw-HH
32	122-2827	1	Cable-Battery, Bk ASM
33	131-8026	1	Decal-Battery Disconnect
34	33003-00	1	Nut-HF
35	80-9330	1	Audio Alarm ASM
35:1	104-5107	1	Nut-Plastic, Knurled
36	98-4799	2	Spacer
37	145-3278	1	Battery - Corrosive

Wiring Harness Assembly No. 122-2177

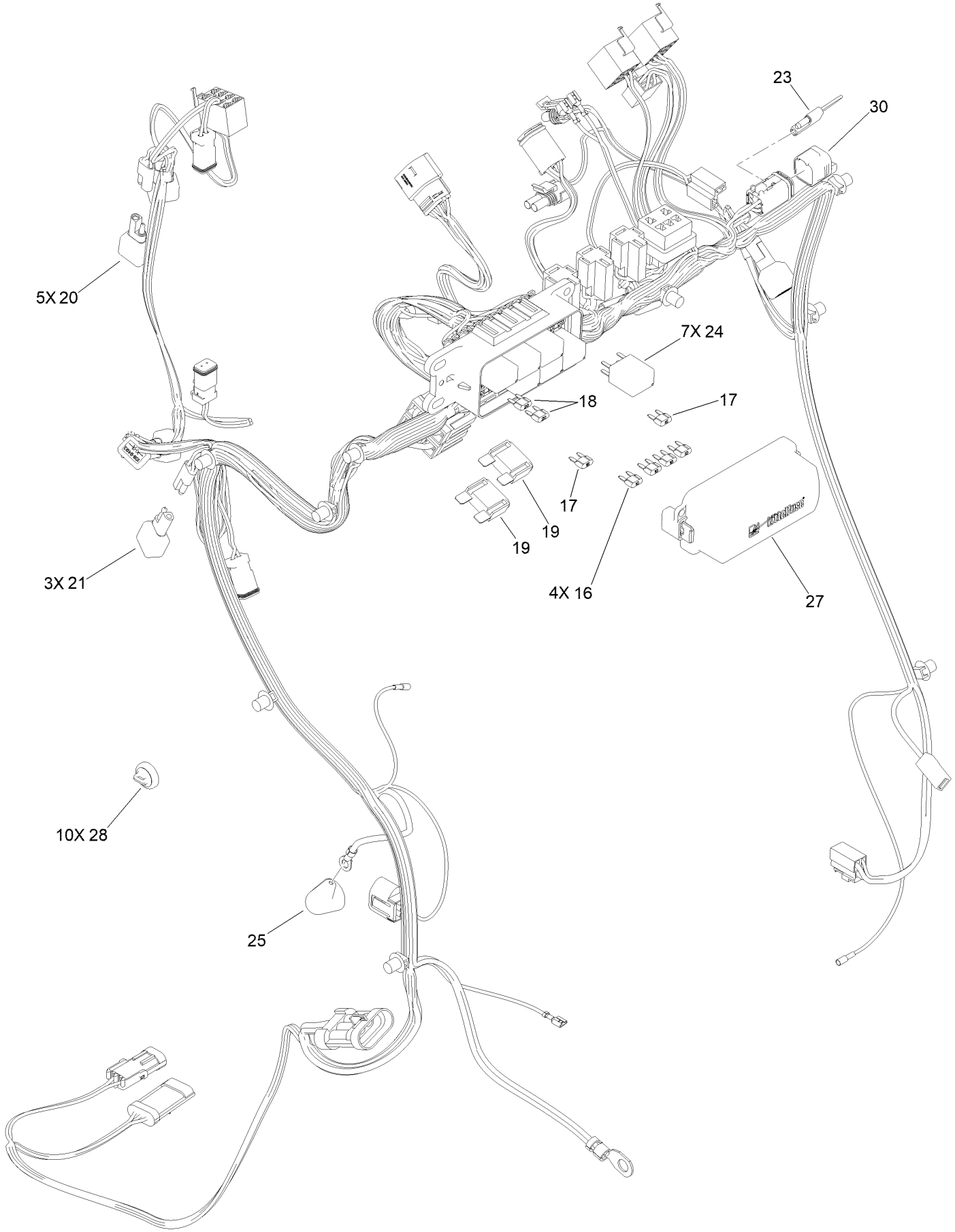

Wiring Harness Assembly No. 122-2177 (continued)

Ref.	Part Number	Qty.	Description
16	121-8866	4	Fuse-Mini Blade, 10 Amp
17	121-8867	2	Fuse-Mini Blade, 15 Amp
18	121-8868	2	Fuse-Mini Blade, 20 Amp
19	94-8002	2	Fuse-Blade, 50 Amp
20	100-4918	5	Diode
21	108-9493	3	Diode-Tvs
23	32180-416	1	Cap-Tethered
24	122-0368	7	Relay-280 ISO
25	32180-017	1	Insulater-Terminal, Black
27	32180-229	1	Cover-Littelfuse, Pdm 60F
28	32180-139	10	Mount-Tie Wrap, Magnetic
30	32180-156	1	Cap-Plug, 6 Way

Cylinder Block Assembly

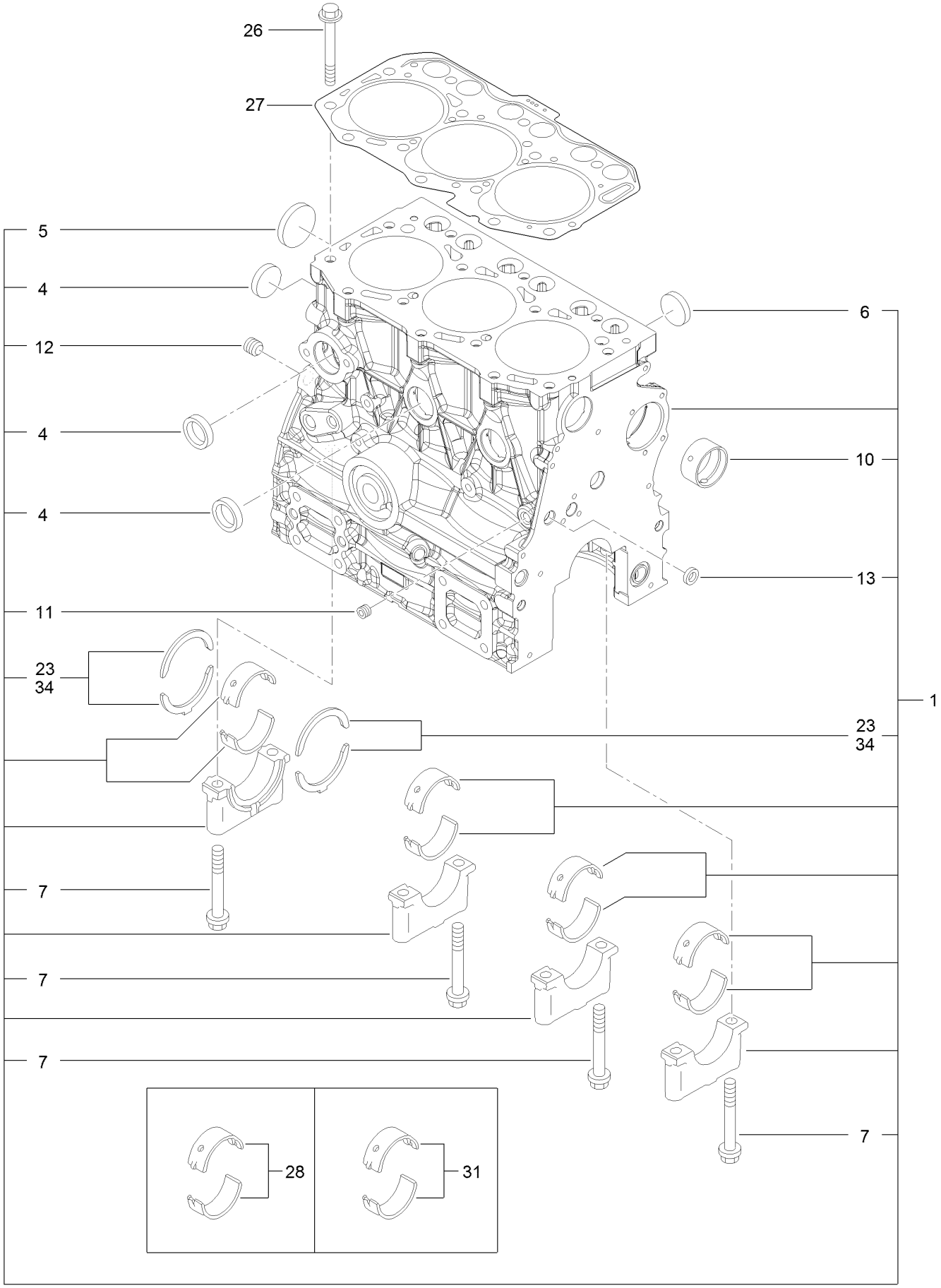

Cylinder Block Assembly (continued)

Ref.	Part Number	Qty.	Description
1	135-4030	1	Cylinder Block ASM
4	135-4031	4	Plug-Cup
5	135-4032	1	Plug-Dish
6	135-4033	3	Plug-Cup
7	135-4034	8	Bolt-Cap
10	135-4035	1	Bushing-Camshaft
11	125-6969	1	Plug
12	125-6973	1	Plug
13	125-7237	1	Plug
23	135-4036	2	Thrust Bearing ASM
26	135-4037	14	Bolt-Head, Cylinder
27	135-4038	1	Head Gasket Set
28	135-4039	4	Main Bearing ASM
31	135-4040	4	Main Bearing ASM
34	135-4041	2	Bearing-Thrust

Gear Housing Assembly

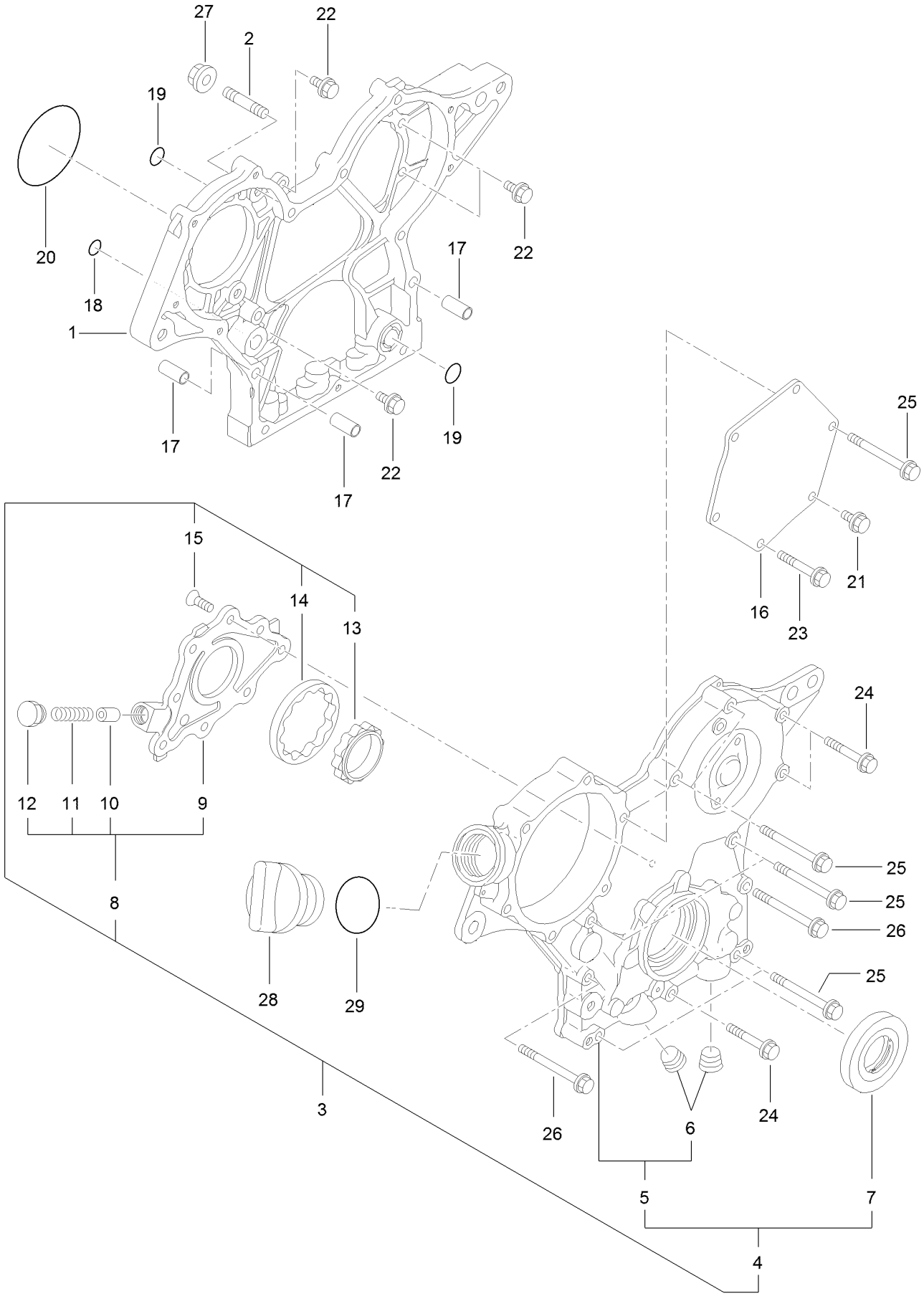

Gear Housing Assembly (continued)

Ref.	Part Number	Qty.	Description
1	135-4042	1	Case-Gear
2	135-4043	3	Bolt-Stud
3	135-4044	1	Gear Case Cover ASM
4	135-4045	1	Gear Case Cover ASM
5	135-4046	1	Cover-Case, Gear
6	133-6798	2	Plug
7	135-4047	1	Seal-Oil
8	135-4048	1	Cover ASM
9	135-4049	1	Cover-Pump
10	135-4050	1	Valve-Relief
11	135-4051	1	Spring
12	135-4052	1	Plug
13	135-4053	1	Rotor-Inner
14	135-4054	1	Rotor-Outer
15	135-4055	8	Screw
16	135-4056	1	Cover-Pump
17	135-4057	4	Dowel-Pipe
18	127-2973	1	O-Ring
19	135-4058	3	O-Ring
20	125-6957	1	O-Ring
21	125-7206	1	Bolt
22	125-7208	4	Bolt
23	125-7211	4	Bolt
24	125-7211	3	Bolt
25	135-4059	7	Bolt
26	136-8257	2	Bolt
27	125-7229	3	Nut
28	125-6972	1	Cover-Filler
29	125-7197	1	O-Ring

Flywheel Housing and Oil Sump Assembly

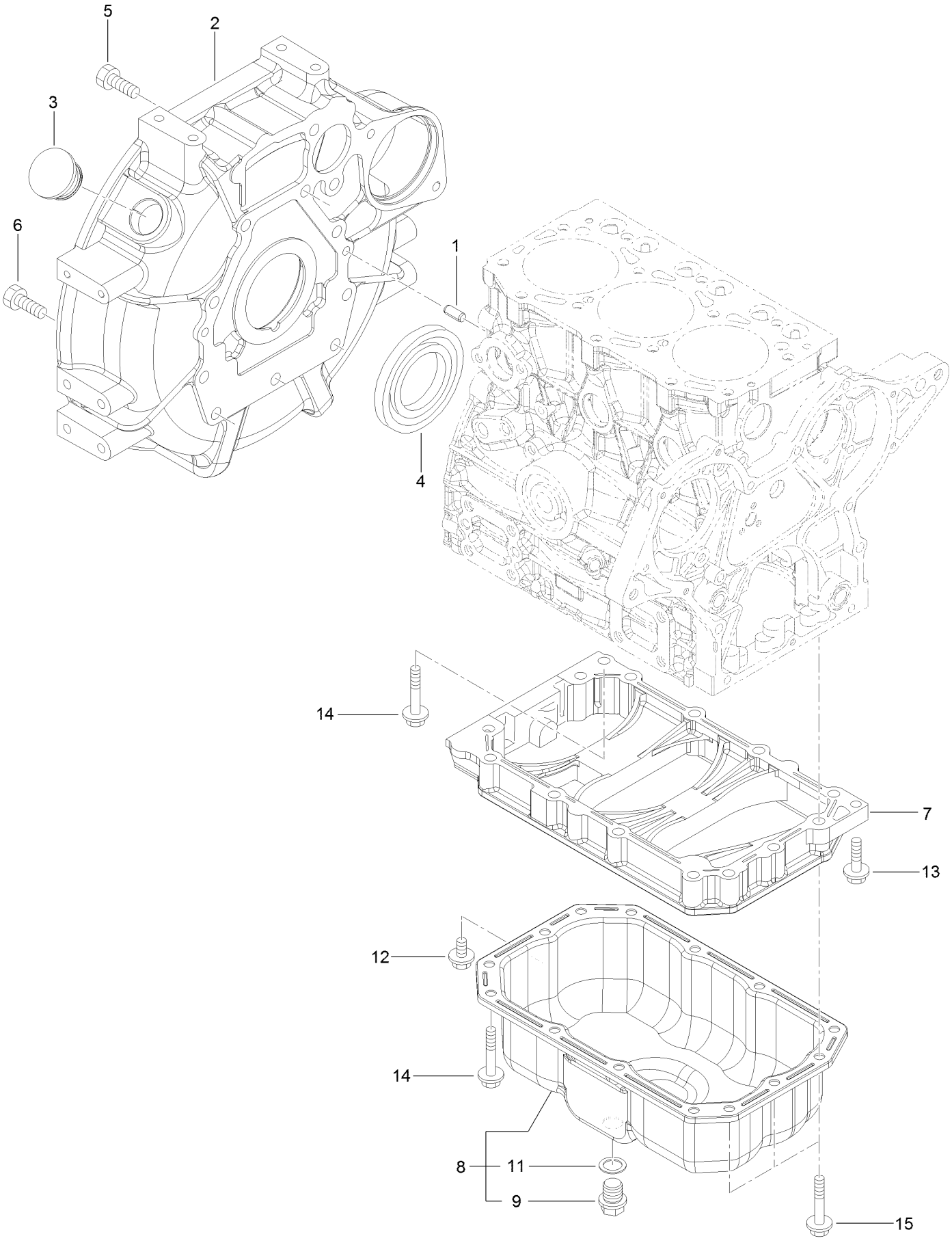

Flywheel Housing and Oil Sump Assembly (continued)

Ref.	Part Number	Qty.	Description
1	125-6995	2	Pin
2	134-1397	1	Housing-Flywheel
3	125-6910	1	Cap
4	135-4064	1	Seal-Oil
5	125-7226	8	Bolt
6	125-7227	3	Bolt
7	135-4066	1	Spacer-Pan, Oil
8	134-1398	1	Oil Pan ASM
9	135-4068	1	Plug
11	136-8236	1	Washer-Seal
12	125-7212	1	Bolt
13	125-7216	1	Bolt
14	125-7219	11	Bolt
15	125-7220	3	Bolt

Cylinder Head and Cover Assembly

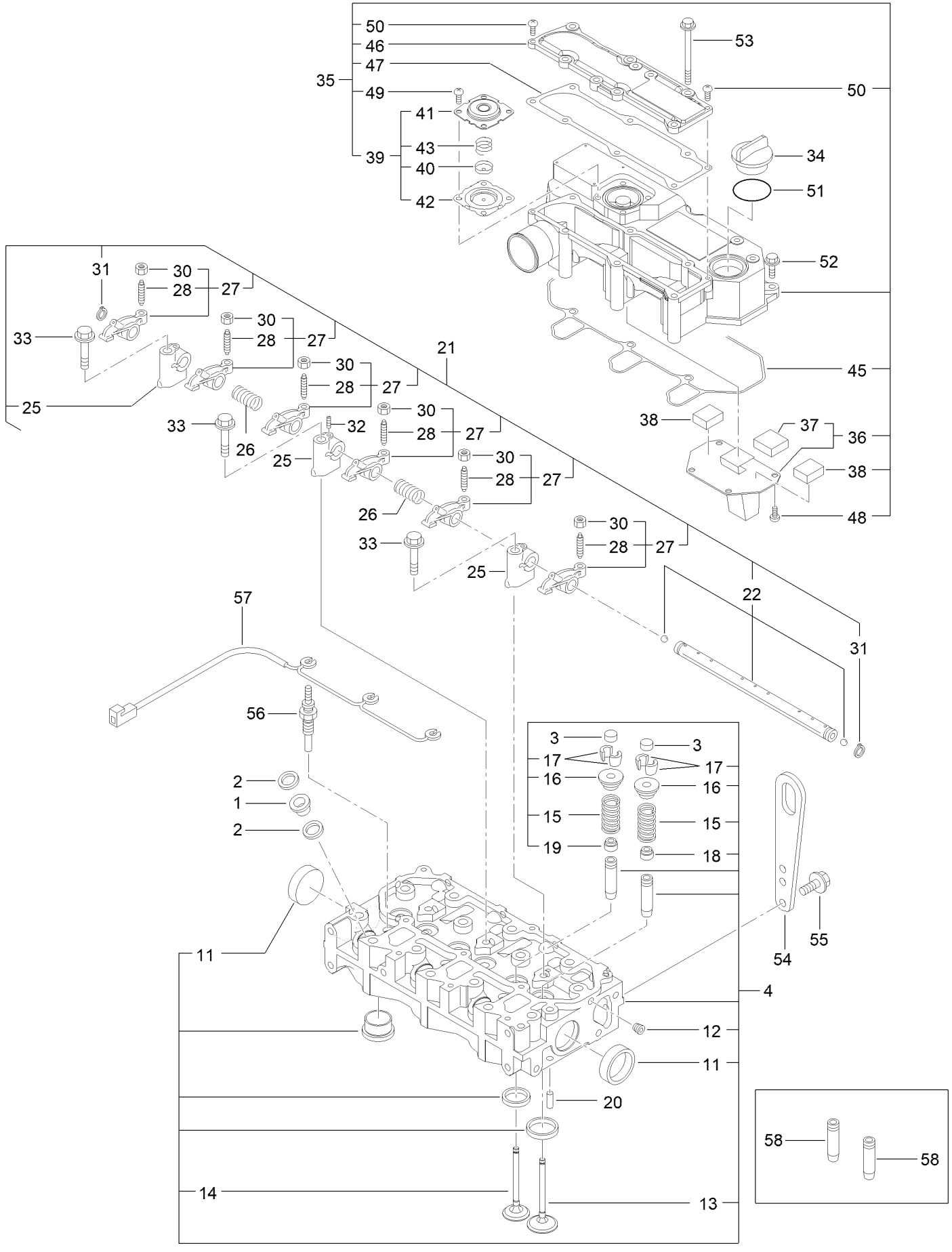

Cylinder Head and Cover Assembly (continued)

Ref.	Part Number	Qty.	Description
1	135-4069	3	Protector-Nozzle
2	135-4070	6	Gasket-Nozzle
3	135-4071	6	Cap-Valve
4	134-4001	1	Cylinder Head ASM
11	135-4073	2	Plug-Cup
12	133-6797	1	Plug
13	135-4074	3	Valve-Suction
14	135-4075	3	Valve-Exhaust
15	135-4076	6	Spring-Valve
16	125-7054	6	Retainer
17	125-6914	12	Cotter
18	125-6915	3	Seal-Stem, Valve
19	125-6916	3	Seal-Stem, Valve
20	125-7184	2	Pin-Spring
21	135-4077	1	Rocker Support ASM
22	135-4078	1	Rocker Shaft ASM
25	135-4079	3	Support-Arm, Rocker
26	135-4080	2	Spring-Rocker
27	135-4081	6	Rocker Arm ASM
28	125-7013	6	Screw-Adjust, Valve
30	125-7014	6	Nut
31	135-7082	2	Ring
32	145-7836	1	Screw
33	125-7218	3	Bolt
34	125-6972	1	Cover-Filler
35	134-1402	1	Cylinder Head Cover ASM
36	135-4085	1	Plate-Baffle
37	135-4086	1	Baffle-Breather
38	135-4086	2	Baffle-Breather
39	135-4088	1	Diaphragm ASM
40	135-4089	1	Plate-Diaphragm
41	135-4090	1	Cover-Diaphragm
42	135-4091	1	Diaphragm
43	135-4092	1	Spring-Diaphragm
45	135-4093	1	Gasket-Cover, Cylinder Head
46	134-1401	1	Cover-Head, Cylinder
47	135-4095	1	Gasket
48	125-7186	4	Screw
49	125-7186	4	Screw
50	127-3168	2	Screw
51	125-7197	1	O-Ring
52	125-7209	3	Bolt
53	135-4096	6	Bolt
54	144-0583	1	Lifter, Engine
55	125-7214	2	Bolt
56	135-4291	3	Plug-Glow
57	134-1443	1	Connector-Plug, Glow
58	125-6917	6	Guide

Exhaust Manifold and Muffler Assembly

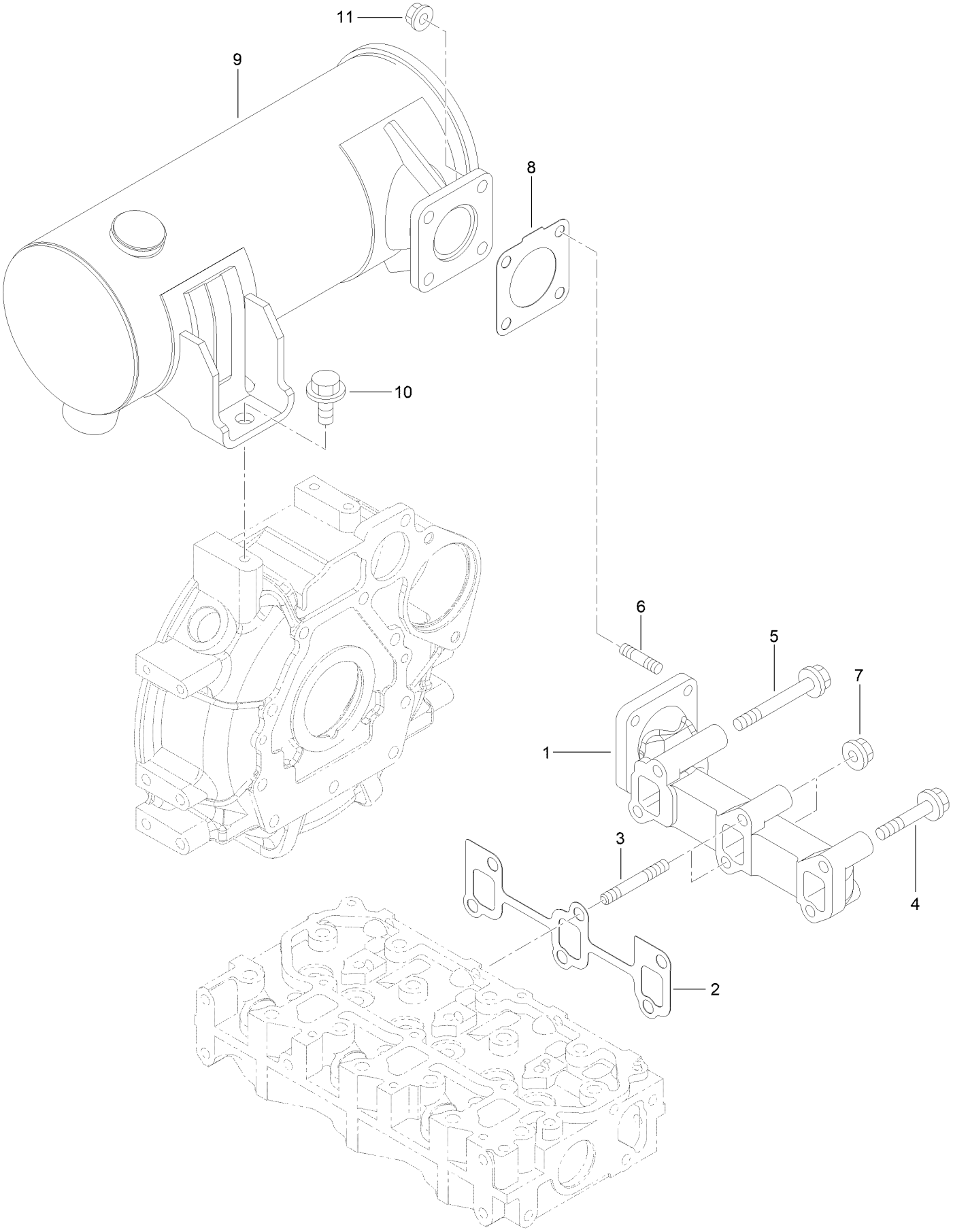

Exhaust Manifold and Muffler Assembly (continued)

Ref.	Part Number	Qty.	Description
1	145-3238	1	Manifold, Exhaust
2	135-4107	1	Gasket-Manifold, Exhaust
3	134-1404	2	Bolt-Stud
4	133-6714	2	Bolt
5	145-3239	2	Bolt,
6	125-6906	4	Stud
7	125-7229	2	Nut
8	134-1383	1	Gasket-Silencer
9	145-3240	1	Muffler
10	127-4773	1	Bolt
11	125-7229	4	Nut

Camshaft and Driving Gear Assembly

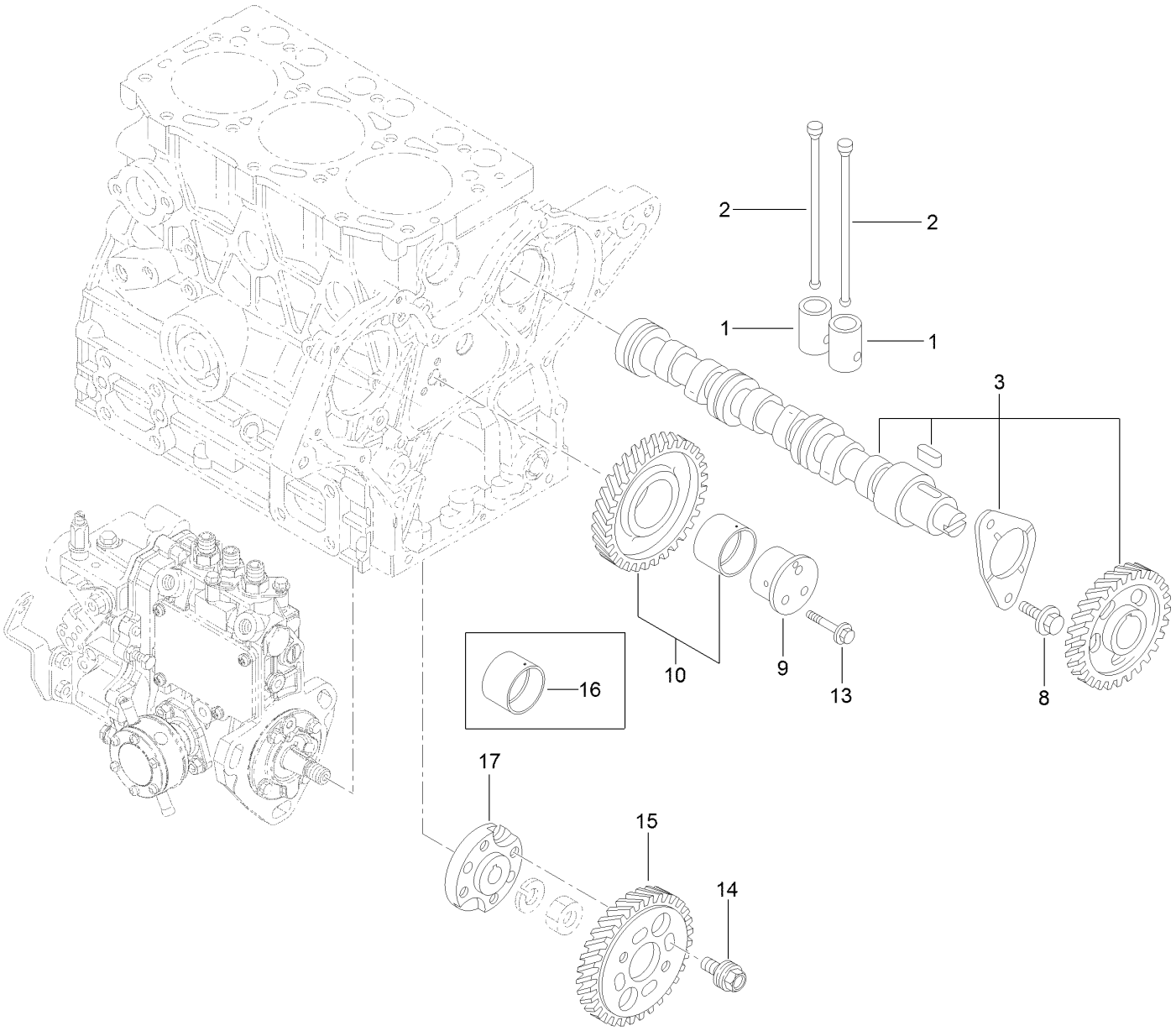

Camshaft and Driving Gear Assembly (continued)

Ref.	Part Number	Qty.	Description
1	135-4108	6	Tappet
2	135-4109	6	Push-Rod
3	135-4110	1	Camshaft ASM
8	125-7206	2	Bolt
9	135-4145	1	Shaft-Idle
10	135-4146	1	Idle Gear ASM
13	135-4147	3	Bolt
14	125-7020	4	Bolt
15	135-4148	1	Gear-Pump
16	135-4149	1	Bushing-Gear, Idle
17	135-4150	1	Flange

Crankshaft and Piston Assembly

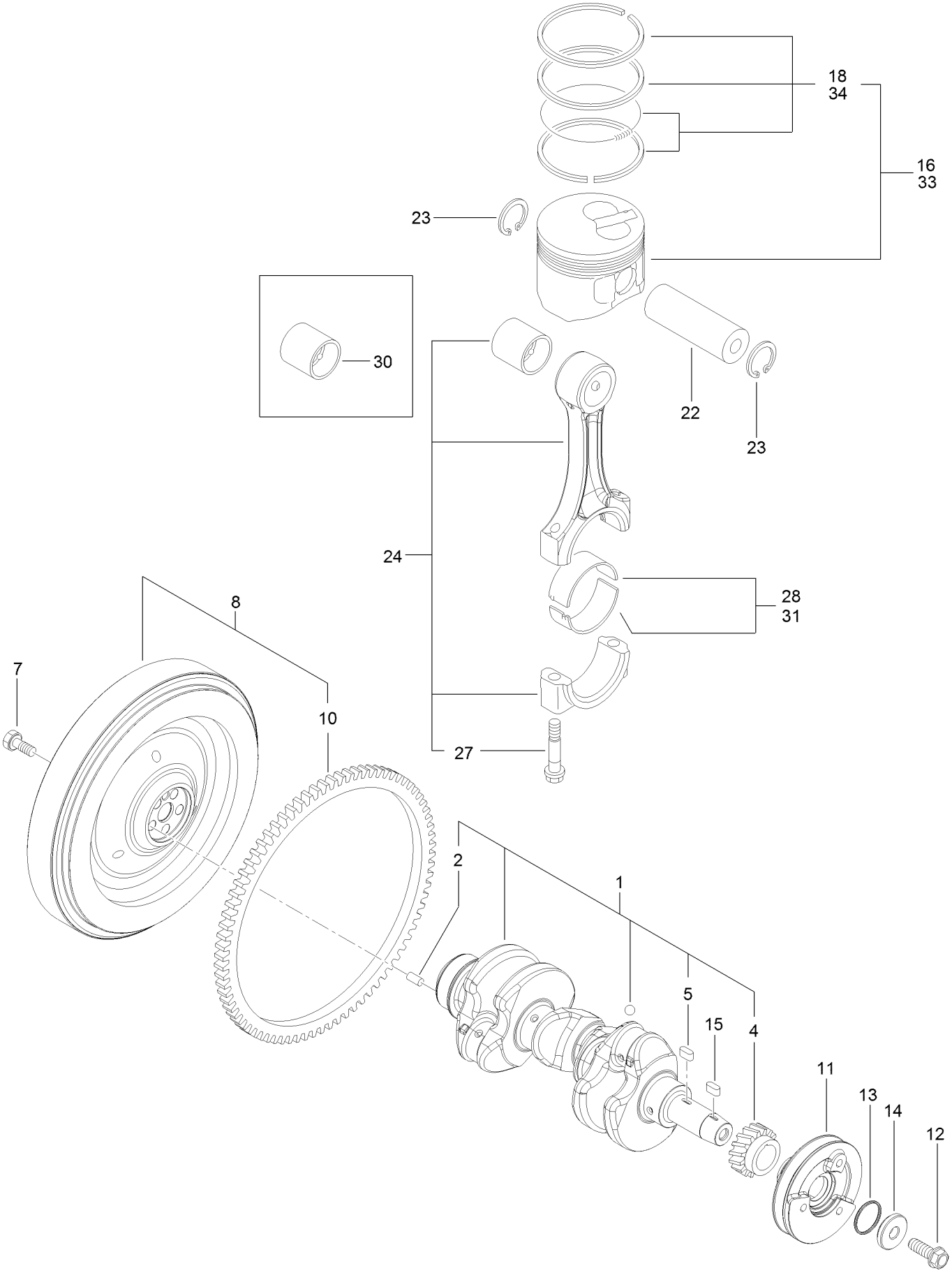

Crankshaft and Piston Assembly (continued)

Ref.	Part Number	Qty.	Description
1	135-4152	1	Crankshaft ASM
2	125-6995	1	Pin
4	135-4153	1	Gear-Crankshaft
5	135-4154	1	Key
7	125-6951	5	Bolt
8	140-7164	1	Flywheel ASM
10	125-6943	1	Gear
11	135-4158	1	V-Pulley, Crankshaft
12	135-4159	1	Bolt-Flange
13	134-4004	1	Packing-Washer
14	135-4161	1	Washer
15	135-4154	1	Key
16	135-4163	3	Piston ASM
18	135-4164	3	Ring ASM
22	135-4165	3	Pin-Piston
23	135-4166	6	Ring
24	134-4005	3	Connecting Rod ASM
27	135-4168	6	Bolt-Rod, Connecting
28	135-4169	3	Bearing-Pin, Crank
30	134-4006	3	Bushing-Pin, Piston
31	135-4171	3	Bearing-Pin (0.25)
33	134-4007	3	Piston ASM (0.25 Os)
34	135-4173	3	Ring ASM

Lubrication and Oil System Assembly

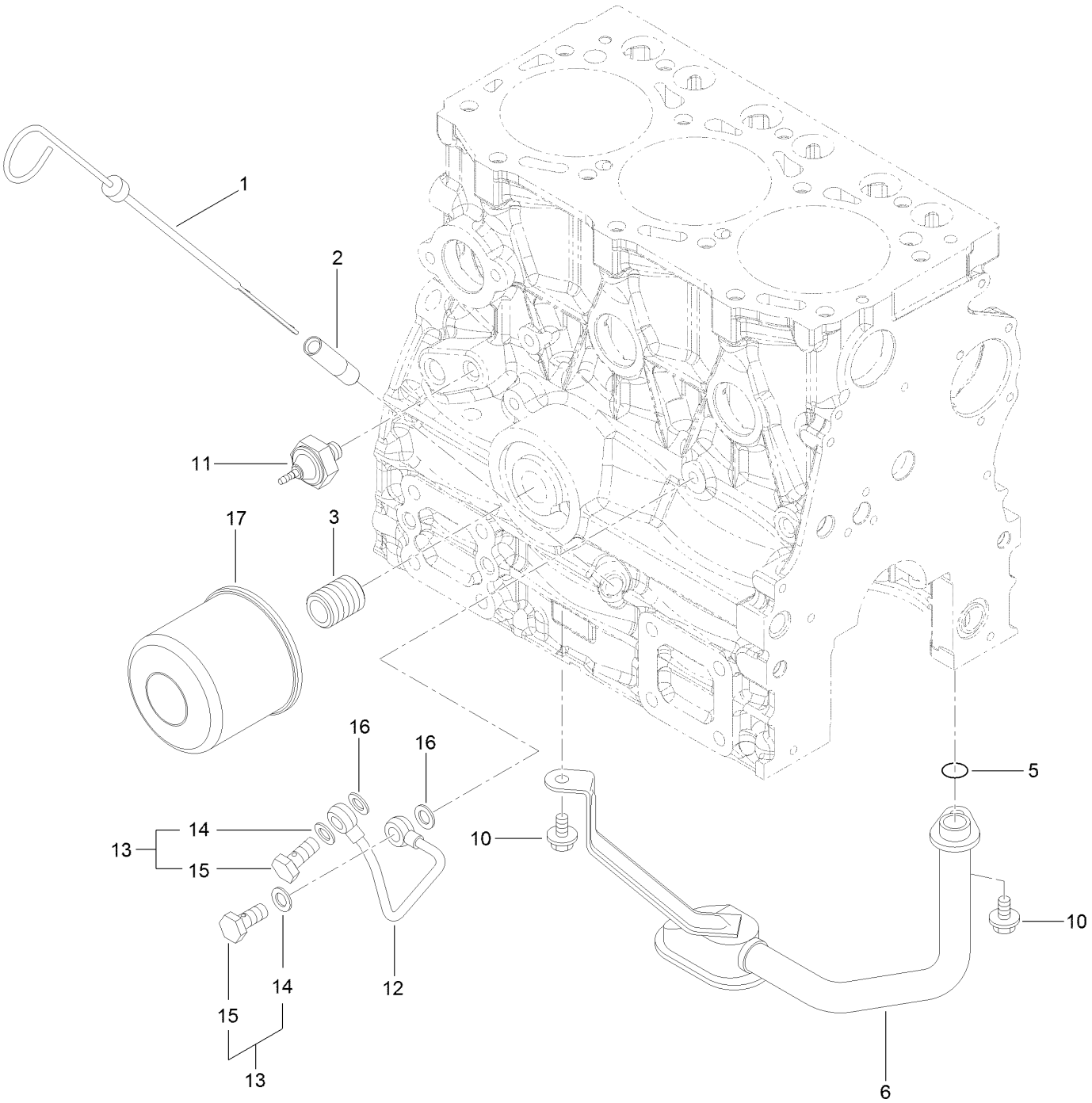

Lubrication and Oil System Assembly (continued)

Ref.	Part Number	Qty.	Description
1	134-1413	1	Dipstick
2	125-6954	1	Guide-Dipstick
3	134-4008	1	Stud
5	135-4178	1	O-Ring
6	134-1414	1	Oil Inlet Pipe ASM
10	125-7205	2	Bolt
11	134-1377	1	Switch-Hydraulic
12	135-4182	1	Pipe-Oil
13	125-6988	2	Joint Bolt ASM
14	125-7174	2	Washer-Seal
15	125-7194	2	Bolt-Joint
16	125-7174	2	Washer-Seal
17	135-4181	1	Filter-Oil, Engine

Cooling Water System Assembly

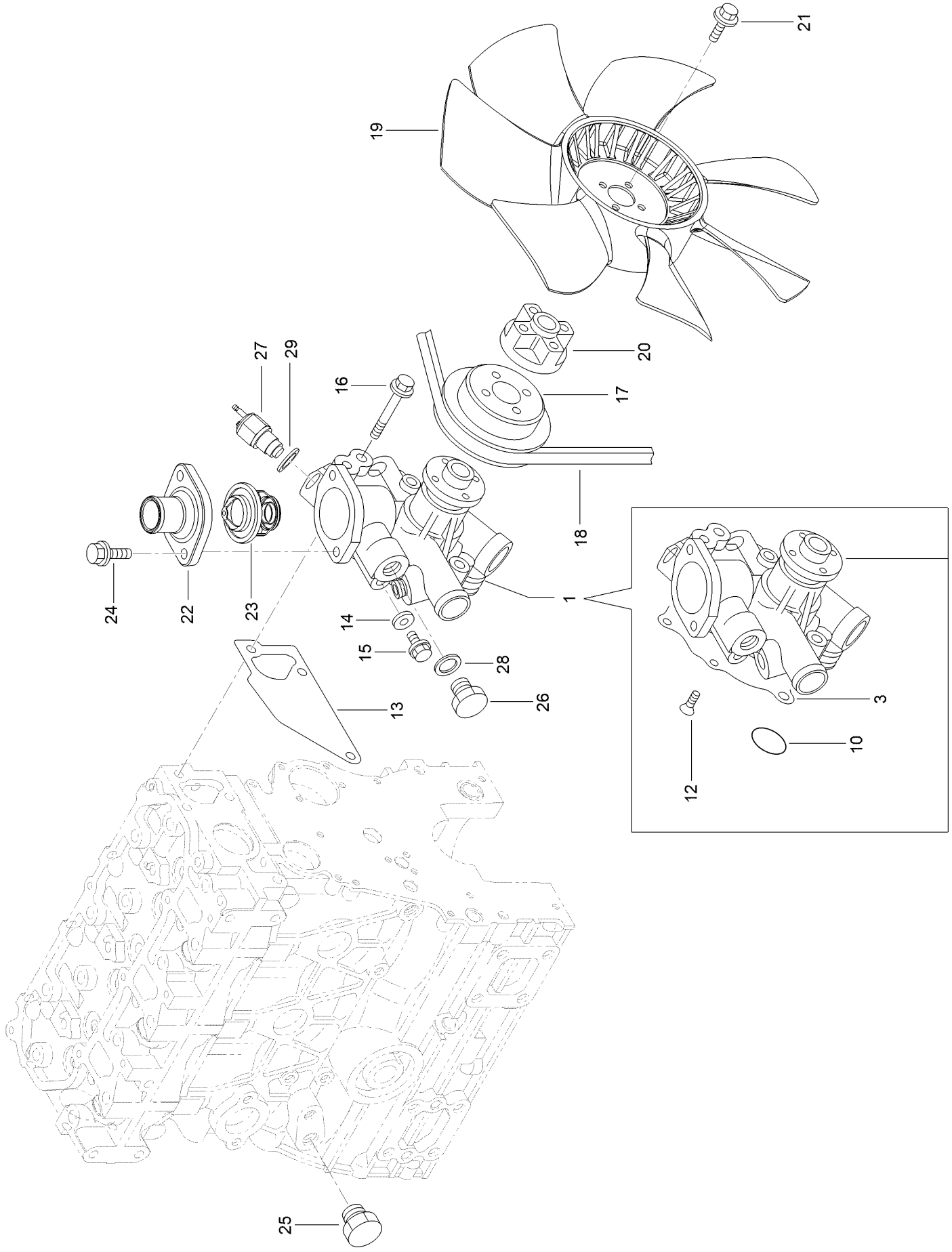

Cooling Water System Assembly (continued)

Ref.	Part Number	Qty.	Description
1	134-4009	1	CW Pump ASM
3	135-4188	1	Gasket
10	135-4190	1	O-Ring
12	133-2504	4	Screw
13	135-4193	1	Gasket-Pump, Water
14	125-7192	1	Gasket
15	125-7212	1	Bolt
16	125-7220	3	Bolt
17	134-1417	1	V-Pulley
18	140-7179	1	V-Belt
19	140-7157	1	Fan-Cooling
20	131-2705	1	Spacer
21	131-2739	4	Bolt
22	140-7171	1	Cover-Thermostat
23	135-4200	1	Thermostat
24	125-7595	2	Bolt
25	125-7171	1	Plug-Drain
26	125-6953	1	Plug
27	145-3244	1	Switch, Temperature
28	125-6979	1	Gasket
29	125-6979	1	Gasket

Fuel Injection Pump Assembly

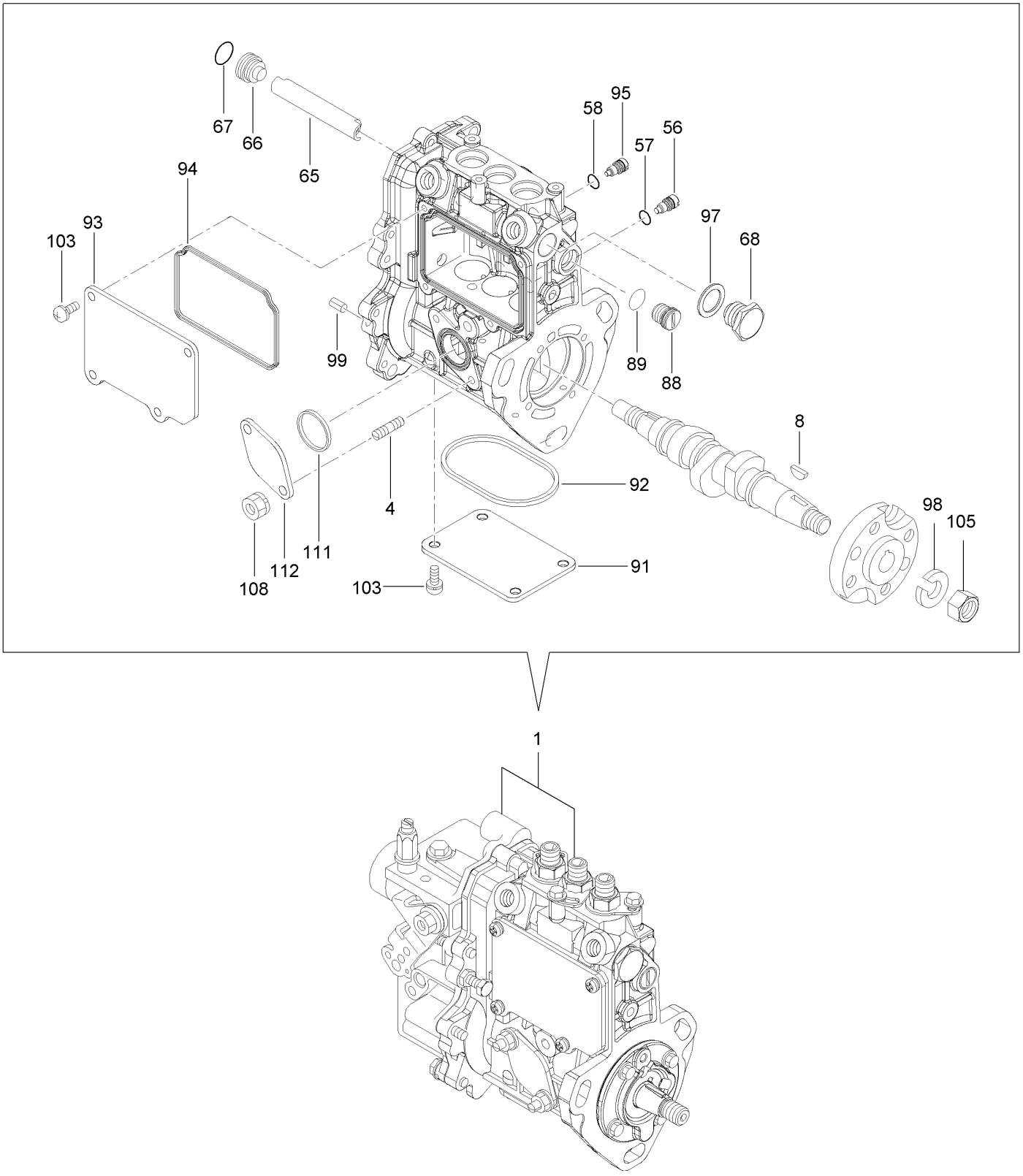

Fuel Injection Pump Assembly (continued)

Ref.	Part Number	Qty.	Description
1	140-7183	1	Fuel Injection Equipment ASM
4	135-4205	2	Bolt-Stud
8	135-4206	1	Key-Feather, Woodruff
56	125-7156	3	Stopper
57	135-4207	3	O-Ring
58	135-4207	1	O-Ring
65	135-4209	1	Deflector
66	135-4210	1	Plug-Deflector
67	135-4211	1	O-Ring
68	135-4212	1	Plug-Deflector
88	135-4213	1	Plug-Rack
89	135-4214	1	O-Ring
91	135-4215	1	Cover
92	135-4216	1	Gasket
93	135-4217	1	Cover
94	135-4218	1	Gasket
95	135-4219	1	Stopper-Rack
97	136-8236	1	Washer-Seal
98	135-4220	1	Washer-Spring
99	125-7183	2	Pin-Spring
103	135-4221	8	Screw
105	133-2506	1	Nut
108	135-4222	2	Nut
111	135-4223	1	Gasket
112	135-4224	1	Cover-Pump

Governor Assembly

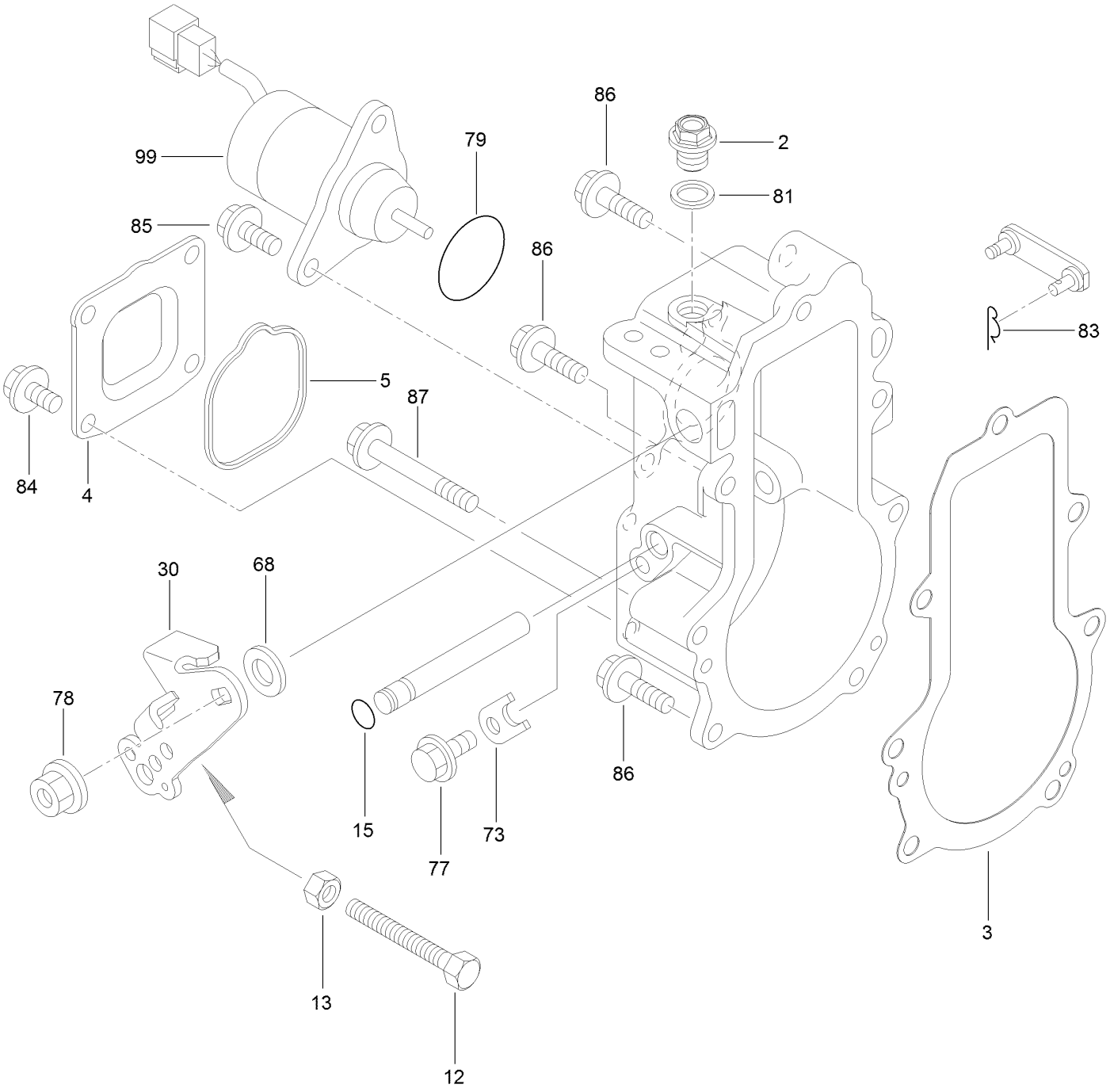

Governor Assembly (continued)

Ref.	Part Number	Qty.	Description
2	135-4226	1	Plug
3	135-4227	1	Gasket
4	140-7159	1	Cover-Case, Governor
5	134-1435	1	Gasket
12	134-4013	1	Bolt-Limit, Idle
13	134-4014	1	Nut
15	135-4207	1	O-Ring
30	134-1385	1	Lever-Control
68	134-1518	1	Shim Set
73	134-1395	1	Stopper-Shaft
77	125-7205	1	Bolt
78	134-4012	1	Nut-M8
79	134-1520	1	O-Ring
81	125-7175	1	Washer-Seal
83	134-1529	1	Pin
84	125-7205	4	Bolt
85	125-7207	2	Bolt
86	125-7209	4	Bolt
87	136-8256	3	Bolt
99	140-7172	1	Stop-Solenoid

Fuel Injection Valve Assembly

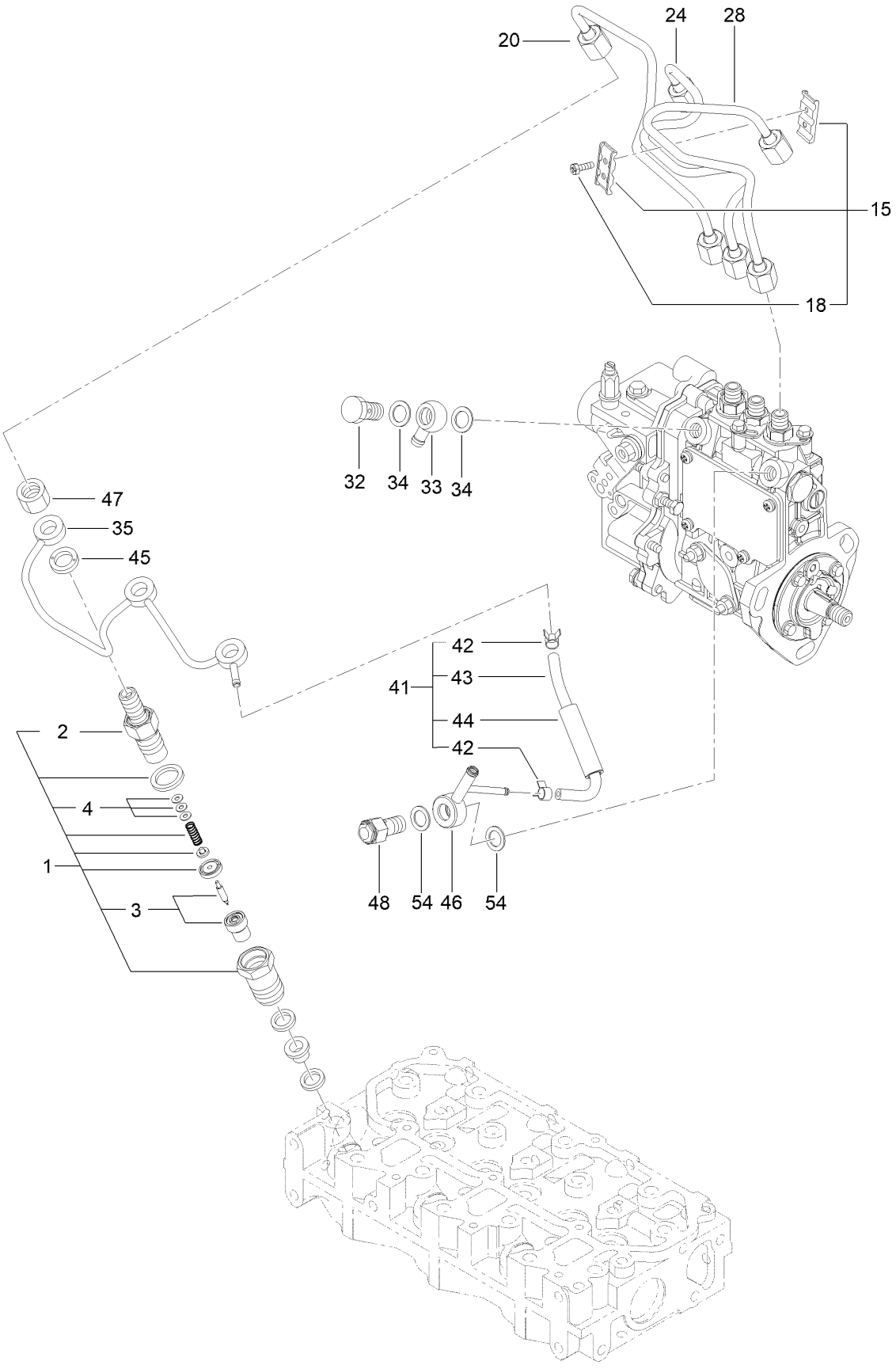

Fuel Injection Valve Assembly (continued)

Ref.	Part Number	Qty.	Description
1	135-4229	3	Nozzle ASM
2	134-1378	3	Holder-Nozzle
3	135-4230	3	Nozzle ASM
4	135-4231	3	Adjusting Shim Set
15	134-1488	1	Retainer-Pipe
18	125-7027	2	Bolt
20	135-4233	1	Pipe ASM (Inj No1)
24	135-4234	1	Pipe ASM (Inj No2)
28	135-4235	1	Pipe ASM (Inj No3)
32	135-4242	1	Bolt-Joint, Pipe
33	135-4243	1	Joint-Pipe
34	125-7176	2	Washer-Seal
35	134-1431	1	Return Pipe ASM
41	145-3245	1	Pipe Assy, Fo Return
42	136-8225	2	Clamp-Hose
43	145-3246	1	Pipe, Fo Return
44	145-3247	1	Tube, Corrugated
45	135-4237	3	Gasket
46	135-4239	1	Joint-Over Flow
47	135-4240	3	Nut-Nozzle
48	135-4241	1	Check Valve ASM
54	125-7176	2	Washer-Seal

Starter Motor Assembly

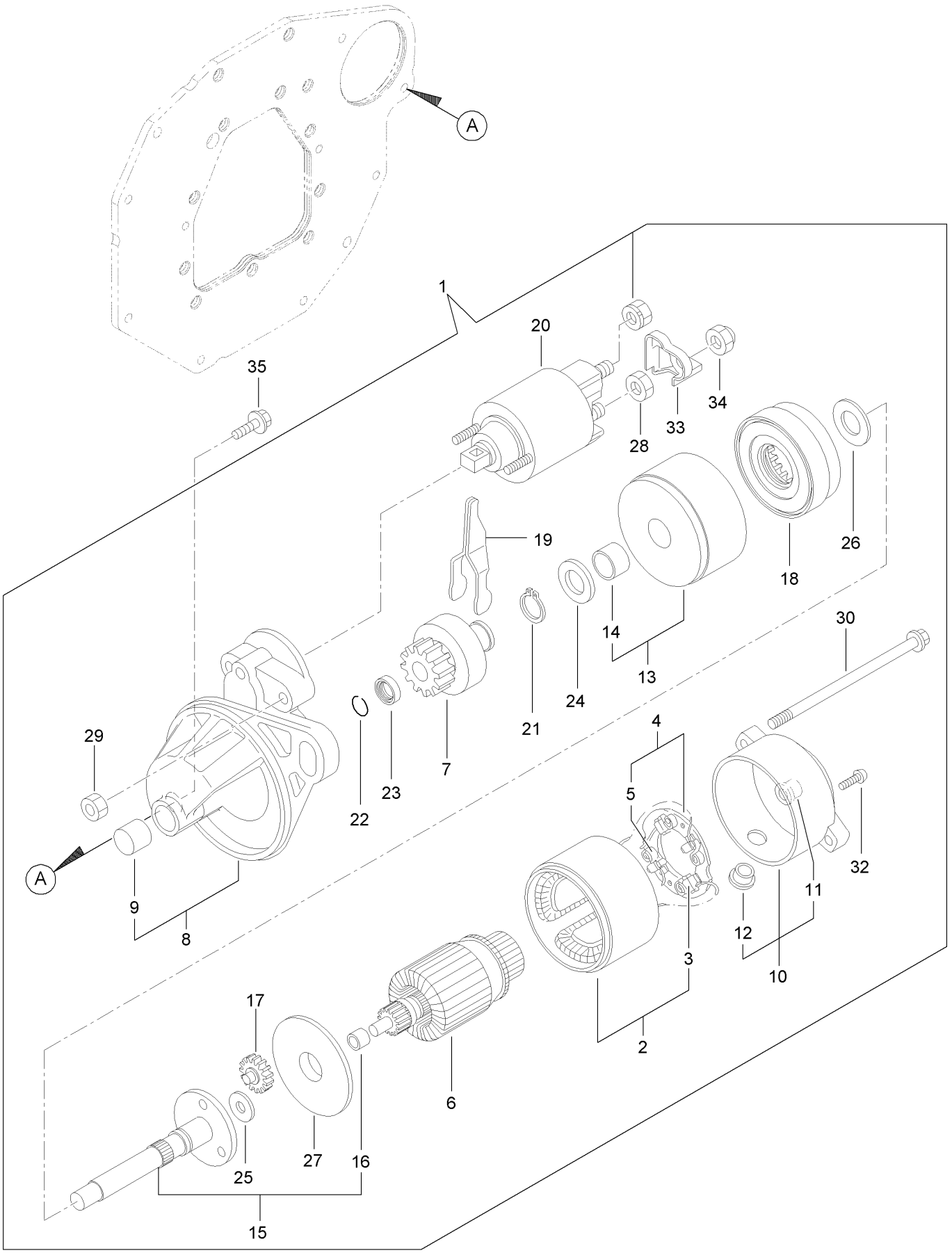

Starter Motor Assembly (continued)

Ref.	Part Number	Qty.	Description
1	135-4244	1	Starter ASM
2	135-4245	1	Yoke ASM
3	135-4246	2	Starter Kit
4	135-4247	1	Holder ASM
5	135-4248	4	Spring
6	135-4249	1	Armature ASM
7	135-4250	1	Clutch ASM
8	135-4251	1	Housing ASM
9	135-4252	1	Bearing-Needle
10	135-4253	1	Frame ASM
11	135-4254	1	Bearing
12	135-4255	1	Cover
13	135-4256	1	Bearing ASM
14	135-4257	1	Bearing
15	135-4258	1	Shaft ASM
16	135-4259	1	Bearing
17	135-4260	3	Gear
18	135-4261	1	Gear
19	135-4262	1	Lever
20	135-4263	1	Switch ASM
21	135-4264	1	Ring
22	135-4265	1	Ring
23	135-4266	1	Nut
24	135-4267	1	Washer
25	135-4268	1	Washer
26	135-4269	1	Washer
27	135-4270	1	Plate
28	135-4271	1	Nut
29	135-4272	2	Nut
30	135-4273	2	Bolt-Through
32	135-4274	2	Screw
33	135-4275	1	Cover-Terminal
34	135-4276	1	Nut
35	133-2496	2	Bolt

Generator Assembly

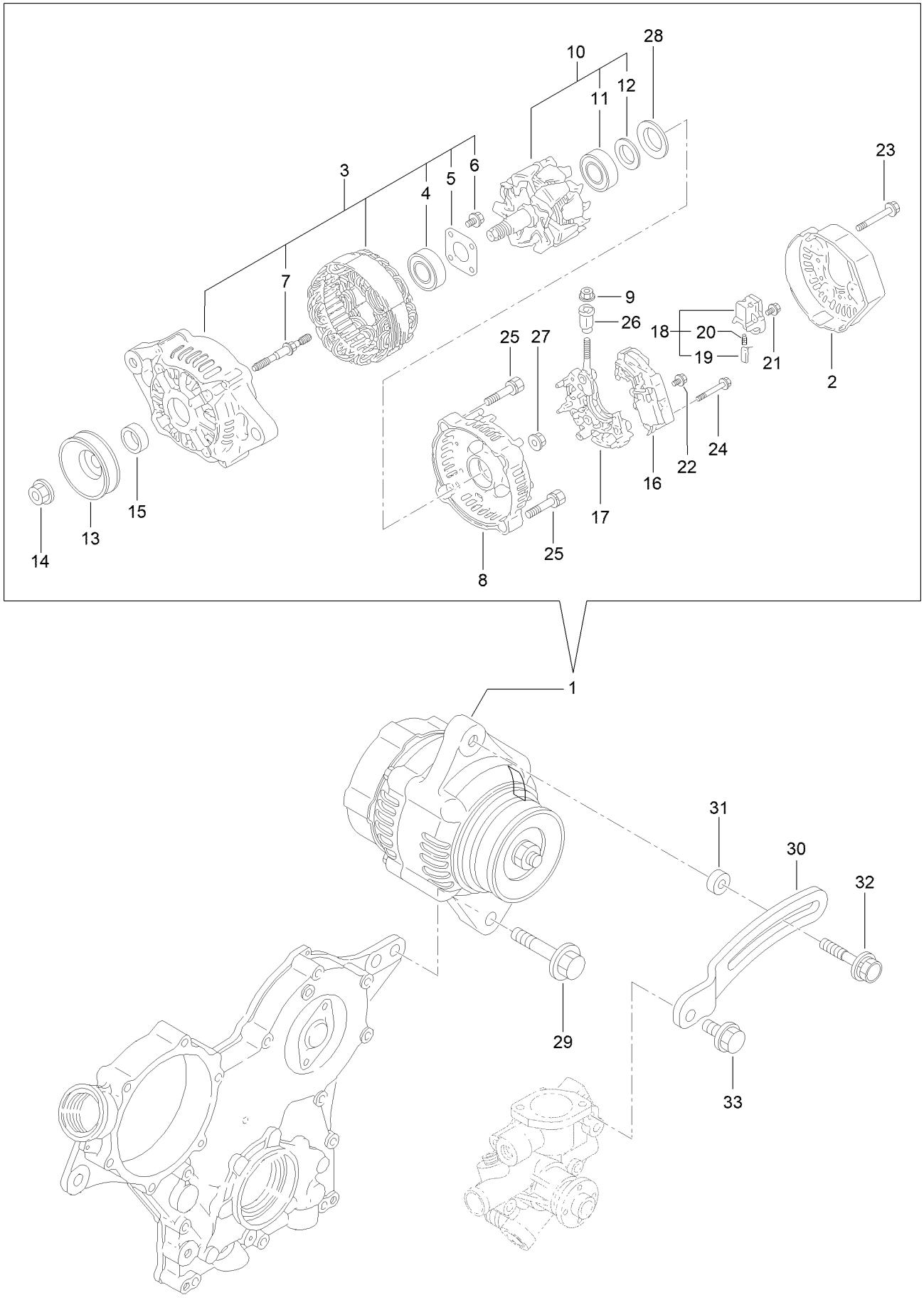

Generator Assembly (continued)

Ref.	Part Number	Qty.	Description
1	140-7162	1	Alternator (12V-40A)
2	127-2999	1	Cover
3	135-4025	1	Frame ASM
4	127-2958	1	Bearing-Ball
5	127-2959	1	Plate-Retainer
6	127-2960	4	Screw
7	127-2961	2	Stud
8	140-7163	1	Rear Frame ASM
9	127-3190	1	Nut
10	127-2951	1	Rotor ASM
11	127-2983	1	Bearing-Ball
12	127-2962	1	Cover
13	127-2954	1	Pulley
14	127-2955	1	Nut
15	127-2957	1	Collar
16	145-7881	1	Regulator Assy
17	127-2963	1	Holder
18	127-2993	1	Holder
19	127-2956	2	Brush ASM
20	127-2964	2	Spring
21	127-2965	6	Screw
22	127-2966	1	Screw
23	127-2967	3	Bolt
24	127-2968	2	Screw
25	127-2969	2	Bolt
26	127-2970	1	Bushing-Insulation
27	127-2971	2	Nut
28	127-2972	1	Washer
29	135-4277	1	Bolt
30	125-6947	1	Spacer
31	140-7166	1	Spacer-Adjuster
32	125-7134	1	Bolt
33	125-7595	1	Bolt

Timer Assembly

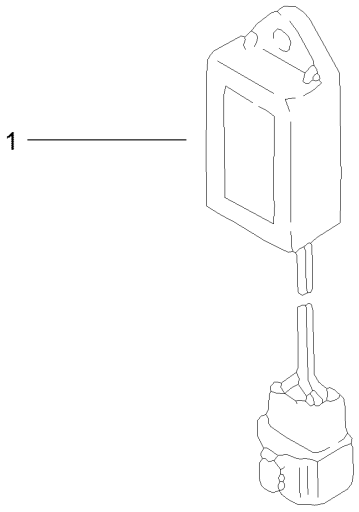

Timer Assembly (continued)

Ref.	*Part Number*	*Qty.*	*Description*
1	134-1507	1	Timer

Gasket Set

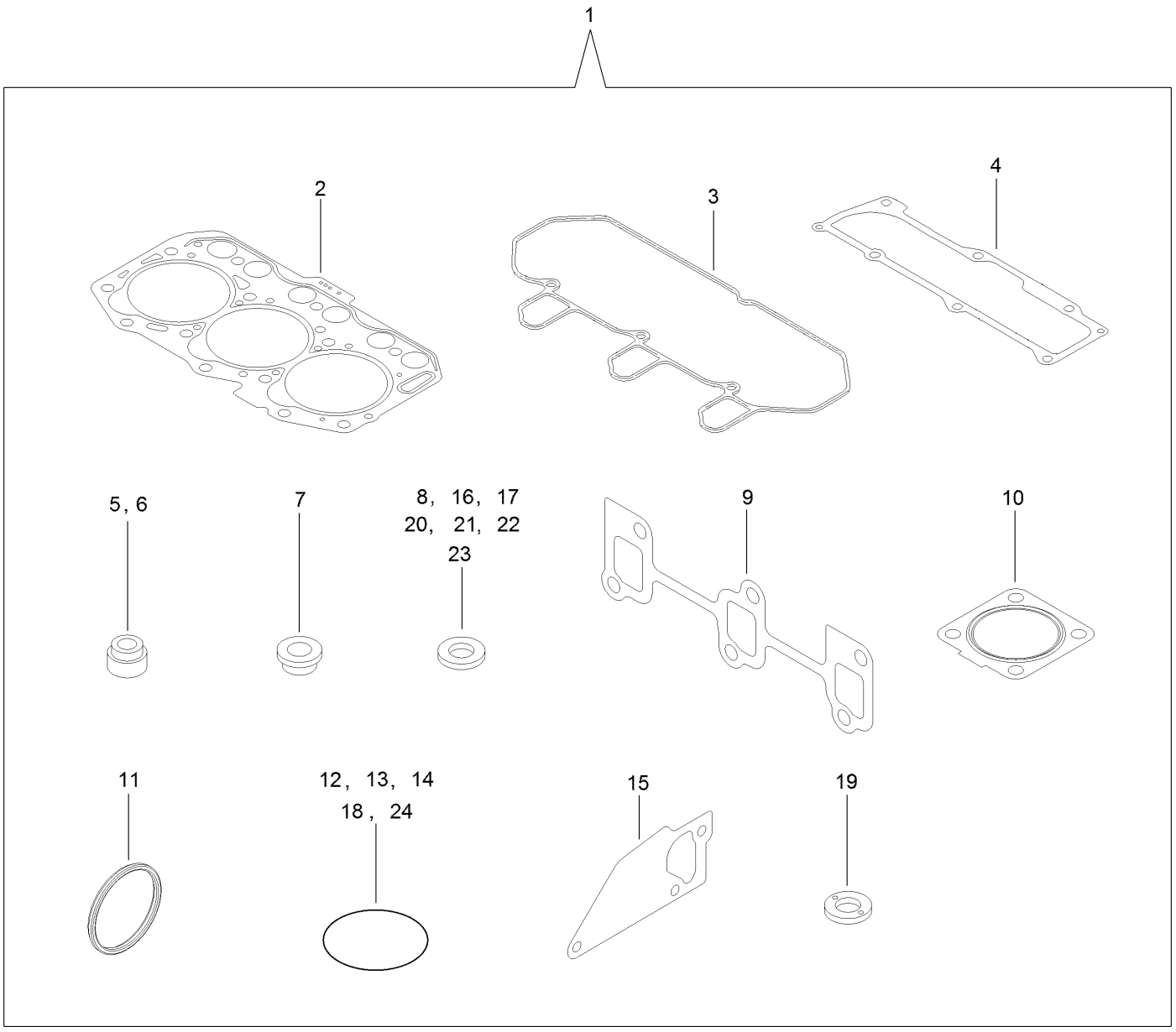

Gasket Set (continued)

Ref.	Part Number	Qty.	Description
1	140-7184	1	Gasket Set
2	135-4038	1	Head Gasket Set
3	135-4093	1	Gasket-Cover, Cylinder Head
4	135-4095	1	Gasket
5	125-6915	3	Seal-Stem, Valve
6	125-6916	3	Seal-Stem, Valve
7	135-4069	3	Protector-Nozzle
8	135-4070	6	Gasket-Nozzle
9	135-4107	1	Gasket-Manifold, Exhaust
10	134-1383	1	Gasket-Silencer
11	134-4004	1	Packing-Washer
12	127-2973	1	O-Ring
13	135-4058	2	O-Ring
14	135-4178	1	O-Ring
15	135-4193	1	Gasket-Pump, Water
16	125-6979	1	Gasket
17	134-4010	1	Gasket
18	125-6957	1	O-Ring
19	135-4237	3	Gasket
20	125-7174	4	Washer-Seal
21	125-7176	4	Washer-Seal
22	136-8236	1	Washer-Seal
23	125-7192	1	Gasket
24	125-7197	2	O-Ring

Attachments and Accessories

For 22352 TX 700 Wide Track Compact Tool Carrier

Product Name	Model/Part
Premium Engine Oil 10w30 (55 Gallon Drum)	121-6392
Premium Engine Oil 10w30 (5 Gallon Pail)	121-6393
Premium Engine Oil 15w40 (55 Gallon Drum)	121-6394
Premium Engine Oil 15w40 (5 Gallon Pail)	121-6395
PX Hydraulic Fluid (5 Gal)	133-8086
PX Hydraulic Fluid (55 Gal)	133-8087
Standard Bucket	22340
Adjustable Forks	22341
4 Cubic Foot Standard Bucket	22409
Loose Materials Bucket	22410
48in Hydraulic Blade	22414
Bore Drive Head	22420
Rod and Reamer	22421
Multi-Purpose Tool	22423
Direct Drive Power Box Rake	22426
Stump Grinder	22429
Tree Forks	22438
Cement Bowl	22442
40in Tiller	22445
Crumber Kit	22464
Trench Filler	22472
High-Torque Trencher Head	22473
High-Speed Trencher Head	22474
Crumber Kit	22477
4-in-1 Bucket	22478
Narrow Bucket	22520
Standard Bucket with Spacer	22522
Grapple Rake	22577
Snow Thrower	22585
Grapple Bucket	22590
Auger Head	22805
Universal Swivel Auger Head	22806
18in Auger Bit	22814
24in Auger Bit	22815
30in Auger Bit	22816
12in Auger Bit Extension	22818
24in Auger Bit Extension	22819
6in Full-Flight Auger Bit	22820
9in Full-Flight Auger Bit	22821
12in Full-Flight Auger Bit	22822
15in Full-Flight Auger Bit	22823
Vibratory Plow	22911
Soil Cultivator	23102
Concrete Breaker	23135
Backhoe	23163
Leveler	23165

Attachments and Accessories (continued)

New Red Paint - Gallon 361-11
Semi-Gloss Black Spray Paint 361-9
Air Dry Red Paint - Qt 5340

Notes:

Notes:



Count on it.