FORM NO. 99-0548 REV. A

TORO®

MODEL NO. 41080-90001 & UP
MODEL NO. 41021-90001 & UP
MODEL NO. 41220-90001 & UP
MODEL NO. 41223-90001 & UP
MODEL NO. 41222-90001 & UP

SET-UP AND PARTS LIST

MANUAL SPRAY SYSTEM
FOR THE WORKMAN 3000 VEHICLE

Refer to the illustrated Parts List for details of parts used in assembling the Pro-Control ™ System.

NOTE: "Right", "Left", "Front" and "Rear" are referenced while seated in the operator's position.

Install the TORO APU Electric Clutch Kit as per the instructions provided with that kit.

PUMP INSTALLATION:

1. Slide the Pulley Spacer on the Pump Shaft. Install the square key into the centrifugal pump shaft key slot. Place the pump pulley on the pump shaft and secure to the shaft using 5/16" x 3/4" hex hd. cap screw, 5/16 I.D. 10 GA. flat washer, and lockwasher (FIG. 1).

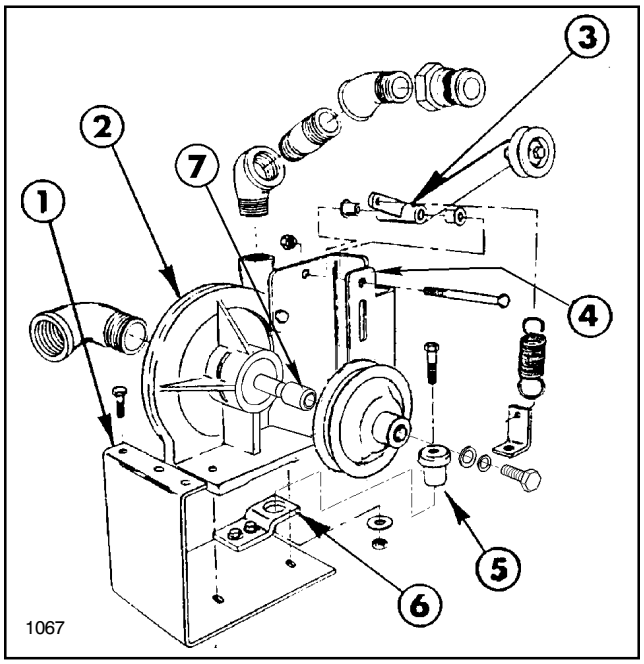

FIG. 1

1. Pump Mounting Brkt.
2. Centrifugal Pump
3. Idler Pivot
4. Idler Pivot Brkt.
5. Rubber Mount
6. Tab Mount
7. Pulley Spacer

2. Attach the idler pivot bracket to the pump by removing the two pump housing bolts and replacing with (2) 3/8" x 1" hex hd. cap screws. (See FIG. 1)

3. Install one flange bushing into each end of the idler pivot assembly mounting hole and attach to the idler bracket using the 3/8" x 3" hex hd cap screw and locknut.

4. Mount the small inside idler pulley on the long arm of the idler pivot using the 3/8" x 2 3/4" hex hd cap screw, 7/8" spacer, and locknut. **Shim as required between Idler Pivot Ass'y and Inside Idler Pulley with the (3) 3/8" flat washer to align with Pump Pulley.** Attach the tension spring to the short arm of the idler pivot assembly (FIG. 1).

NOTE: In the following instructions, sealer refers to Teflon Tape when used for pipe fittings.

5. Apply sealer and install the 90 degree x 1 1/4" street elbow into the suction port of the pump. Apply sealer and install the 1" x 3" nipple, (2) 45 degree x 1" elbows, and quick adapter into the discharge port of the pump (FIG. 1).

6. Install the rubber mount into the tab mount and loose fit the tab mount to the pump mounting bracket using the (2) 3/8" x 1" hex hd cap screws, flat washers, and locknuts (FIG. 1).

NOTE: For the installation of pump mount bracket it is necessary to first remove the rear mounting bolt on the hydraulic valve. If equipped with the auxiliary hydraulic package, it is necessary to remove the last two mounting bolts of this valve. This will allow for usage of the bolt holes to properly install pump mount bracket. Reuse the fasteners earlier removed.

7. Attach the pump mount bracket assembly to the left side of the vehicle frame using the (3) 5/16" x 1" hex hd cap screws, lockwashers, and hex nuts (FIG. 3). Next, attach the tab mount to the crossmember using the 3/8" x 1 1/2" hex hd cap screw, 3/8" I.D. 10 GA. flat washer, and locknut. See FIG. 1. Tighten all fasteners securely.

8. At the hydraulic control valve, loosen and disconnect the fittings for the right hand dump cylinder hoses. Reroute these hoses to the underside of the pump suction hose. Reconnect and tighten fittings, then secure with tie straps. Secure all other hoses and cables with tie straps to ensure they do not rub against pump pulleys and belts (FIG. 2).

©The TORO Company - 1999
All Rights Reserved

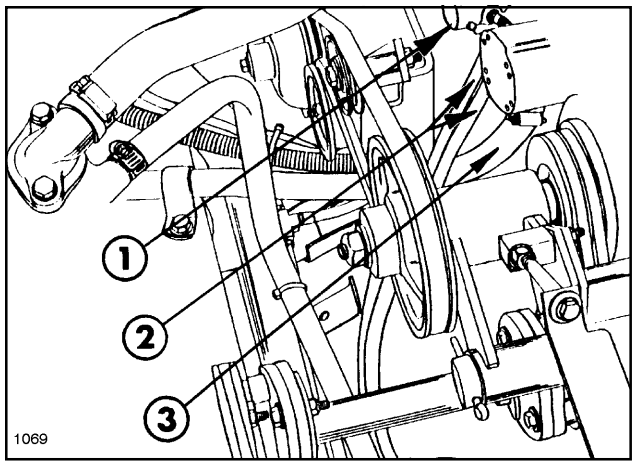

FIG. 2

1. Hydraulic Control Valve
2. R.H. Dump Cylinder Hoses
3. Pump Suction Hose

9. Mount the pump and the spring tab to the pump mount bracket using the (2) 3/8" x 1 1/2" hex hd cap screws, flat washers, and locknuts. Attach the spring to the spring tab located at the base of the pump (FIG 1).

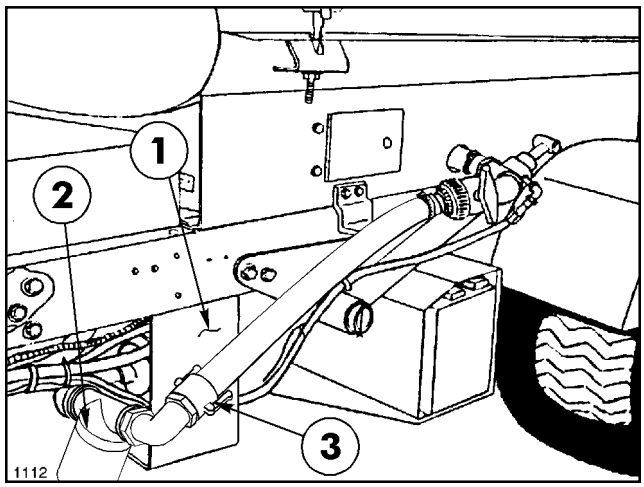

FIG. 3

1. Pump Mounting Brkt.
2. Suction Strainer
3. Quick Adapter

10. Apply thread sealer and install the 1 1/4" close nipple, suction strainer, 90 degree st. elbow, reducing nipple, and quick adapter into the suction side of the pump (FIG. 3).

11. Install the pump drive belt on the pulleys as shown in FIG. 4. After installation of the belt, loosely mount the backside idler pulley in the long slot on the idler pivot bracket using 3/8" x 2" carriage bolt, 3/4" spacer, hex nut, lockwasher and (2) flatwashers. With the belt on the topside of the idler pulley, slide the pulley up until all the slack is removed from the belt, then tighten the nut on the carriage bolt. To apply tension to the belt, place the inside idler pulley under the belt. See FIG. 4.

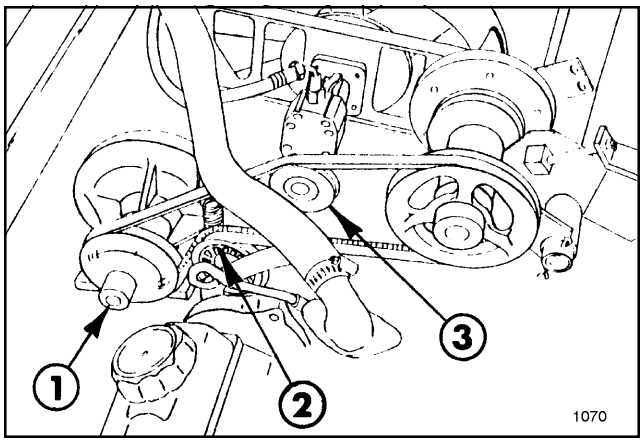

FIG. 4

1. Pump Pulley
2. Backside Idler Pulley
3. Inside Idler Pulley

NOTE: On models equipped with the diesel engine, the enclosed hose protector and nylon tie must be installed on the lower radiator hose next to the street elbow in the suction port of the pump. On models equipped with the liquid cooled gas engine, install the hose protector and nylon tie on the upper radiator hose above the pump belt. This is to prevent the hose from wearing through prematurely.

CONTROL CONSOLE & HARNESS INST:

1. Unplug the wire harness connectors from both headlights.

2. Remove (15) screws and washers securing front hood to vehicle frame and remove hood.

3. Temporarily mount the console mounting bracket to the upper dash support using two of the earlier removed screws and washers (FIG. 5).

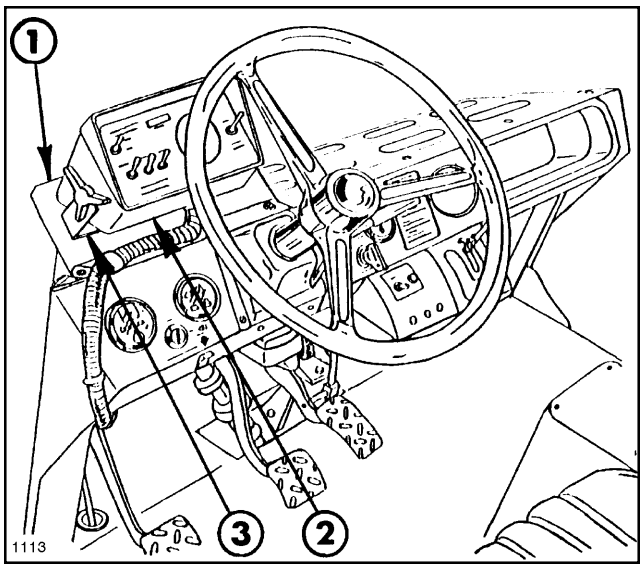

FIG. 5

1. Mounting Bracket
2. Control Console
3. "U" Console Brkt.

4. Using (2) 1/4" x 5/8" hex washer head screws, flat washers and nuts, secure the "U" shaped console bracket to the console bracket to the console mounting bracket. Mount the console to the "U" shaped bracket using the (2) mounting knobs (FIG. 5).

5. Route the control cable under the dash and through the hole in the floorboard. See Fig. 6. Loosen the bolts on the channel under the floorboard and feed the cable through the channel.

6. Route the control cable along the left side of the vehicle back towards the engine compartment and secure with nylon ties.

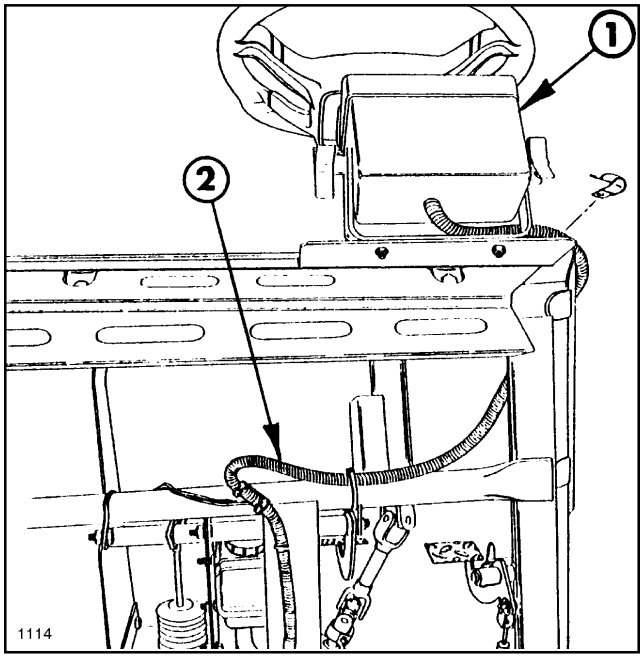

FIG. 6

1. Control Console
2. Control Cable

7. Locate and plug the 6' extension cable into the main console cable and connect the 1/4" gauge tube with the 1/4" union fitting. Route the extension cable to the rear of the vehicle and secure with nylon ties.

8. Re-tighten the bolts on the channel under the floorboard.

9. Turn the "POWER ON/OFF SWITCH TO "OFF".

10. Route the red and white battery wires of the console control cable to the auxiliary fuse block. Connect the red wire to a red wire on the fuse block and ground the white wire to the ground terminal bolt.

11. Insert the 20 amp fuse into the fuse block and affix decal marking fuse for the spray system.

NOTE: It may be necessary to leave the hood off to mount other accessories. If so, do not complete steps 12-14 until all other accessories are installed.

12. Remove the (2) screws that hold the console and console mounting bracket to the vehicle.

13. Reinstall the hood and remount the console and console mounting bracket using the 15 screws and washers earlier removed and install the "R" clamp on the console cable and secure.

14. Reconnect the wire harness connectors to both headlights.

TANK INSTALLATION:

1. Loosen and remove the (2) 3/8" nuts and attaching bolts that hold the left rear fender to the vehicle frame. Install a 10 GA. flat washer on each bolt and install the bolt through the fender and vehicle frame and mount the tank support bracket with these bolts. Reinstall the nuts and tighten securely. If not equipped with fenders, use the hex hd cap screws and nuts provided. See FIG. 7.

2. Cut the shipping straps and remove the Spray Tank and Skid Assembly from the shipping pallet.

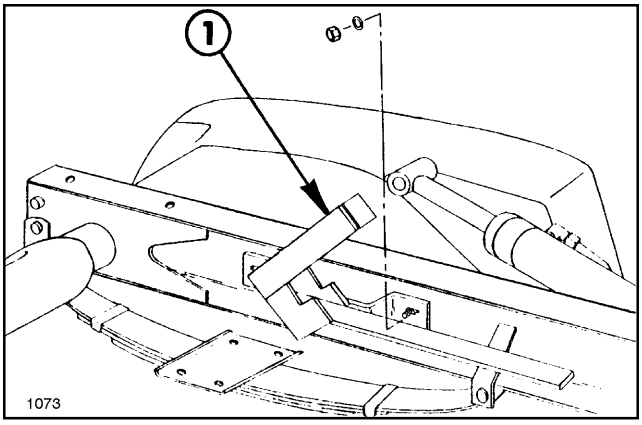

FIG. 7

1. Tank Support Brkt.

3. Install the two trim pieces on the middle and right cutouts at the front of the tank skid.

4. Place the tank and saddle assembly on the vehicle frame. Secure it to the vehicle frame by sliding the (2) 3/4" dia. clevis pins through the rear mounting lugs and the vehicle frame. Secure by installing the (4) lynch pins into the clevis pins. See FIG. 11.

5. Install the Anti-Siphon device as shown in the Anti-Siphon Kit instructions provided.

6. Mount right Hold-In Brace assembly to the (2) 5/16" carriage bolts in the front Tank Band using (2) 5/16" flat washers and hex nuts. Tighten securely. See FIG. 8.

7. Attach right Boom Hold-In assembly to Hold-In Brace assembly using (2) 1/4" U-bolts and (4) 1/4" lock nuts. Attach Rubber Hold-Down to Hold-In Brace assembly. Repeat steps 6 and 7 for left side.

8. Mount Wash Tank Bracket (open end forward) to right-hand Hold-In Brace assembly using (2) 5/16" x 1" hex hd. cap screws, flat washers, and hex nuts. Place Clean Water Wash Tank into Wash Tank Bracket and secure with Rubber Hold-Down, as shown in FIG. 8.

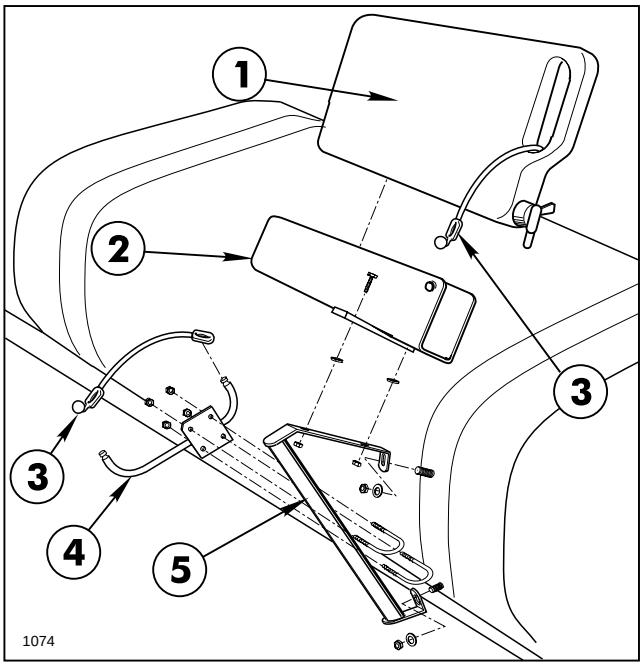

FIG. 8

1. Clean Water Wash Tank
2. Wash Tank Bracket
3. Rubber Hold-Down
4. Boom Hold-In Ass'y
5. Hold-In Brace Ass'y

9. Raise and support the front of the tank saddle assembly approximately 30 - 40 degrees to gain access to the engine compartment.

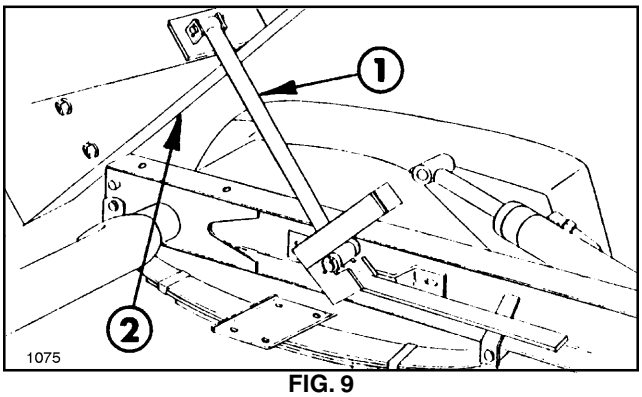

FIG. 9

1. Strut Support Rod
2. Tank Saddle Ass'y

10. Assemble the (2) 3/8" long spacers, clevis pin, and cotter pin to one end of the strut support rod Insert Strut Support Rod through the support bracket located on left side of the vehicle (FIG. 9).

11. Attach the strut support rod assembly to the inside of the skid at the rear bulkhead using the clevis and cotter pin (FIG. 9).

12. Locate and remove the (2) 1/2" bolts on each side of the vehicle frame and install the attachment mounting bracket using the bolts earlier removed. Re-tighten the nuts and bolts securely (FIG. 10).

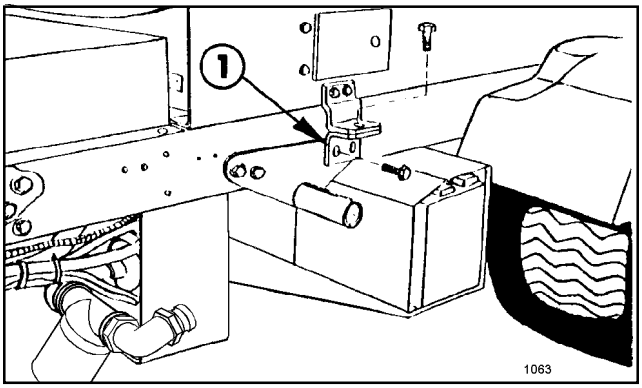

FIG. 10

1. Attachment Mounting Brkt.

13. Secure all wiring along the vehicle frame and under the dash panel with the plastic cable ties furnished.

14. Release the strut support rod and lower the tank and saddle assembly.

15. Apply sealer and install the 1" 90 degree hose barb in the rear tank tee (FIG. 16).

NOTE: If installing the "Enclosed Boom" option inplace of the standard boom, disregard "BOOM INSTALLATION" and "BOOM EXTENSION & NOZZLES INST."

BOOM INSTALLATION:

1. Attach the two boom mount upright angles onto the rear of the tank saddle extensions using (4) 1/2" x 1 1/4" hex hd cap screws and locknuts (FIG. 11)

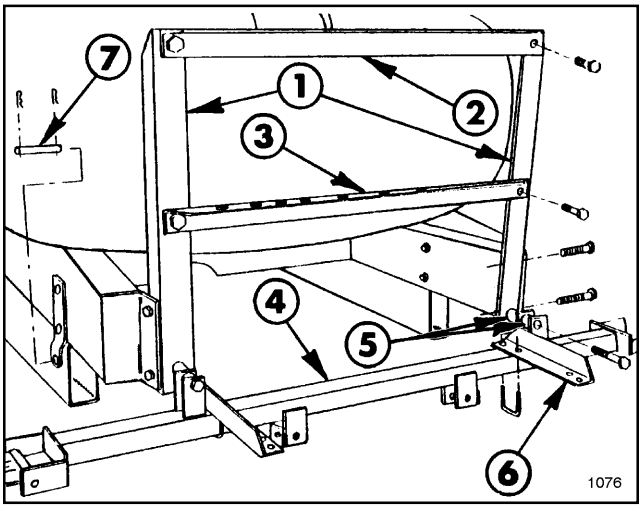

FIG. 11

1. Upright Angles
2. Upper Cross Support
3. Lower Cross Support
4. Boom Main Frame
5. Spacer Tubes
6. Center Boom Angle
7. 3/4" Clevis Pin

NOTE: Steps 2-4 apply to the assembly of the standard boom only. If the optional "Boom Pivot Kit" will be installed, see the instructions furnished with that kit. The lower cross support to be used with that kit is different than the support to be used on the standard boom.

2. Position the lower cross support angle and attach it to the boom mount upright arms with (2) 1/2" x 1 1/4" hex hd cap screws and locknuts (FIG. 11).

3. Position the upper cross support angle and attach it to the boom mount upright angles with (2) 1/2" x 1 1/4" hex hd cap screws and locknuts. (See FIG. 11)

4. Position the spacer tubes between the boom mount upright angles and the lug on the main frame tube. Use (2) 1/2" x 4" hex hd cap screws and locknuts to secure the main frame to the uprights (FIG 12).

5. Position the two center boom angles on the main frame tube and secure them to the frame tube with (2) square U-bolts, (4) flat washers, and (4) hex nuts (FIG. 11).

6. Center and attach the center boom pipe to center boom angles with two clamps, 3/8" x 1" hex hd cap screws, washers and lock nuts. See FIG. 12.

BOOM EXTENSION & NOZZLES INST:

1. Loosely attach the double barb turret assembly in the approximate center of the center boom pipe. For most uniform spray coverage, position all turret assemblies as shown in FIG 12.

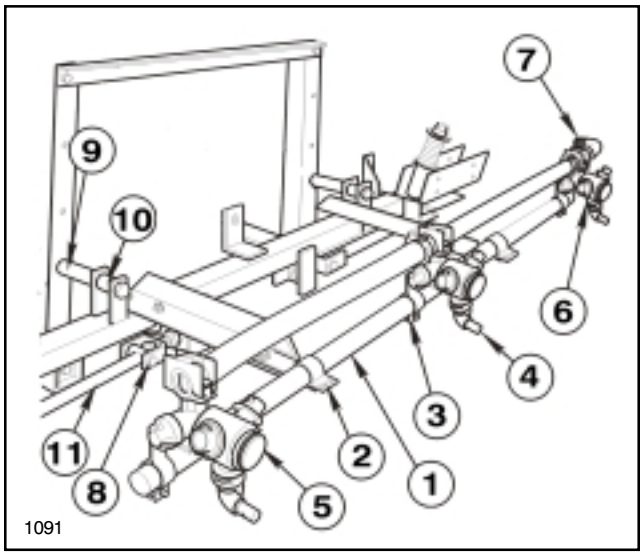

FIG. 12

1. Center Boom Pipe
2. Boom Clamp
3. Nozzle Clamp
4. Double Barb Turret
5. Single Barb Turret
6. Threaded Barb Turret
7. 90° Hose Barb
8. Adjustable Clevis Ass'y
9. 1-1/4" Spacer Tube
10. 1" Spacer Tube
11. Strut Assembly

2. Loosely attach a single barb turret assembly to LH end of the center boom pipe. Loosely attach threaded turret assembly to RH end of the center boom pipe. Place two hose clamps on the two 3/4" x 19" jumper hoses and connect the two "end" turret assemblies to the double barb turret assembly. Turret assemblies should be level and spaced on 20" centers. Install 90° 3/4" hose barb on RH turret assembly. Tighten all fasteners securely (FIG. 12).

3. Attach the strut assemblies to the adjustable clevis assemblies found on each side of the main frame tube with (2) 1/2" x 2" clevis pins and (2) 1/8" x 1" cotter pins. See FIG. 12.

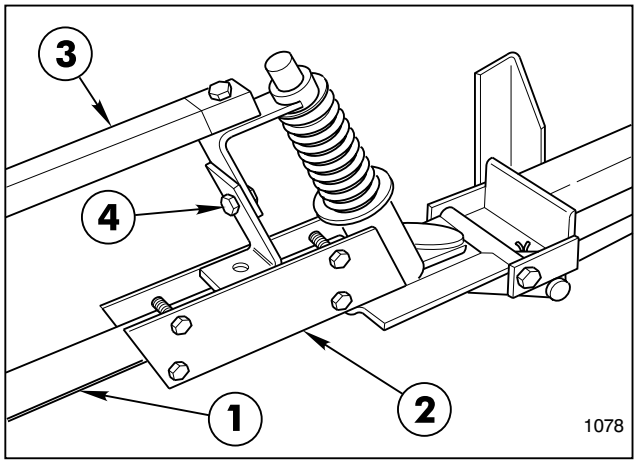

FIG. 13

1. Extension Boom Pipe
2. Pivot Ass'y
3. Boom Support Ass'y
4. Height Adjustment

4. Insert the plugged end of an extension boom pipe into the pivot assembly and secure with (4) 1/4" x 1 1/4" hex hd cap screws and lock nuts. Repeat on the opposite side to assemble the other extension boom (FIG. 13).

IMPORTANT! Do NOT over tighten nuts in steps 4 & 6. The clamping action could crush the boom pipe.

5. Attach the boom support assembly to the pivot assembly, using a 5/16" x 1 1/2" screw and locknut. See FIG. 13 & 14.

6. Secure the two plates of the boom support assembly to the extension boom pipe, using (2) 1/4" U-bolts, (4) locknuts, and (4) flat washers (FIG. 14).

7. Assemble the boom support assembly to the other extension boom pipe.

8. At the adjustable clevis assemblies (FIG. 12), adjust the booms to the level position by adjusting the jam nuts to the desired position, then tighten the end nuts against the boom frame support member.

9. Attach three double barb and one single barb turret assemblies on each extension boom pipe as shown in FIG. 14. Turret assemblies are to be level & spaced on 20" centers. Connect the turret assemblies with the 3/4" x 19" jumper hoses. Secure with hose clamps. **NOTE: Two jumper hoses provided with this kit are 21" long. They should be cut to 19" long for this set-up.**

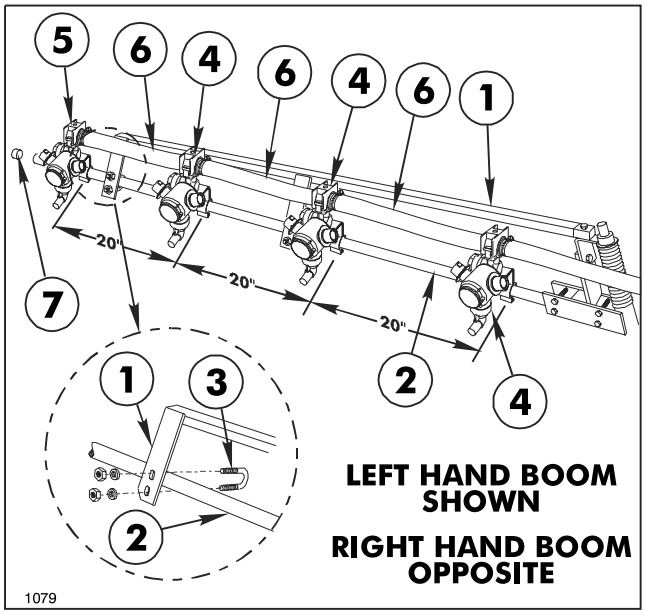

FIG. 14

1. Boom Support Assembly
2. Extension Boom Pipe
3. U-bolt
4. Double Barb Turret
5. Single Barb Turret
6. Jumper Hose 3/4 x 19"
7. Boom Cap

INSTALLING SPRAY VALVES:

1. Install three (3) 90° 3/4" Hose Barbs into the front outlet (wiring side) ports of Solenoid Valves. See FIG. 15.

2. Install Close Nipple to the Control Valve side of the Solenoid Valve Assembly. Connect Solenoid Assembly to Control Valve by screwing the two together. See FIG. 16.

3. Connect the plug on the 6' extension cable to the control valve, then make connections to the electric solenoid valves (black wire on the left solenoid, brown on the middle solenoid, blue on the right solenoid, and white jumper on all three solenoids. See FIG. 15.

4. Slide head of M6 x 16 mm hex hd. screw to the top of the mounting groove in each Solenoid Valve. Assemble Solenoid Valve Assembly to the Solenoid Mounting Bracket using three (3) M6 x 16 mm screws just installed. Secure Solenoids with three (3) M6 hex nuts and lockwashers. See FIG. 16.

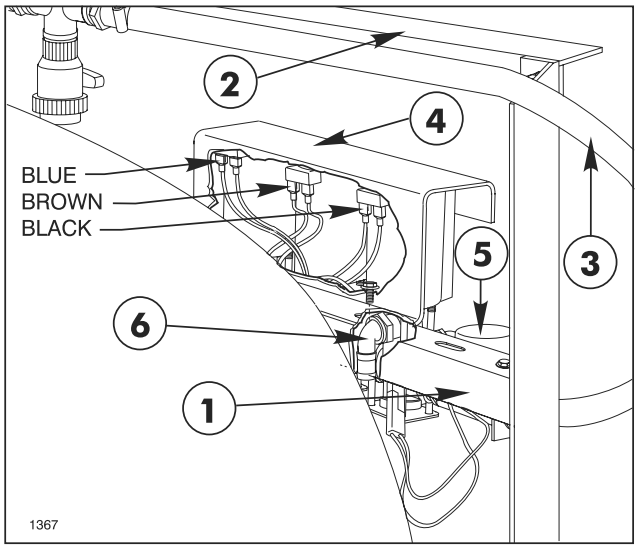

FIG. 15

1. Bottom Cross Support
2. Top Cross Support
3. Supply Hose 1" x 42"
4. Solenoid Mtg. Bracket
5. Control Valve
6. 90° 3/4" Hose Barb (3)

5. Install Solenoid Valve and Bracket Assembly to the Bottom Cross Support as shown in FIG. 15. Secure with two (2) flange cap screws and Hex Flange Nuts. NOTE: If the Hydroject 4000 kit (Model 09850) has been installed or will be installed, it is necessary to remove and discard top Cross Support Angle and put the Bottom Cross Support Angle in its place. A hole will have to be drilled to mount the Tee Assembly Bracket on the relocated Bottom Cross Support.

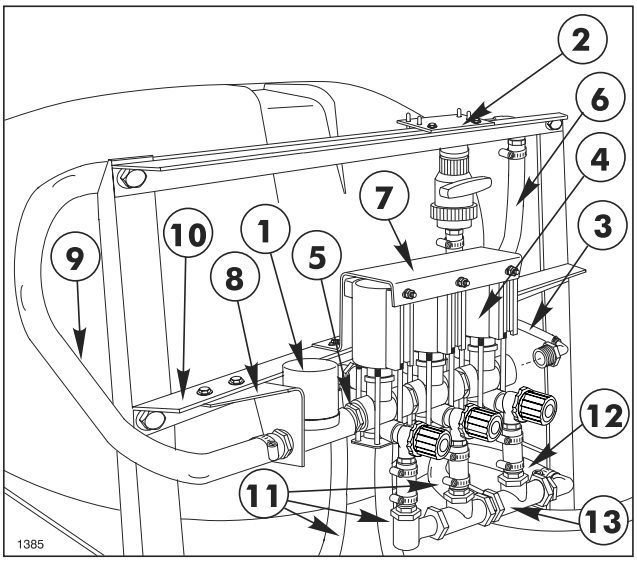

FIG. 16

1. Control Valve
2. Tee Assembly Bracket
3. Pressure Gauge Tube
4. Solenoid Valve Assy.
5. 3/4" Close Nipple
6. Supply Hose 1" x 100"
7. Solenoid Mtg. Bracket
8. Control Valve Bracket
9. Supply Hose 1" x 42"
10. Bottom Cross Support
11. Boom Feeder Hose
12. Bypass Hose 1" x 13"
13. Bypass Manifold Assy.

6. Install Control Valve Bracket to Bottom Cross Support. See FIG. 16. Secure with two (2) flange cap screws and Hex Flange Nuts. (Do not tighten).

7. Place Straight Hose Barb through circular opening in Control Valve Bracket and screw into the inlet port of the Control Valve. Tighten Control Valve Bracket fasteners securely.

8. Install Reducer Bushing/Gauge Tube Fitting to end port of Solenoid Valve Assembly. Connect Pressure Gauge Tube to Gauge Tube Fitting.

9. Install 90° hose barb to Right Hand end of Bypass Manifold Assembly. See FIG 16.

10. Connect the boom feeder hoses to the three hose barbs in the electric solenoids and secure with hose clamps. See FIG. 16.

11. Place a hose clamp on the center boom feeder hose and attach it to the 90° hose barb at the RH end of the center boom pipe.

12. Place a hose clamp on the right and left boom feeder hoses and attach them to the double barb turrets on the right and left extension boom pipes.

13. Apply sealer and install the 1" x 1" hose barb into the L.H. end of the tee assembly and a 1" x 3/4" hose barb into the ball valve at the tee assembly. See FIG. 16.

14. Mount the tee assembly and bracket to the upper cross support with (2) 5/16" x 1" hex hd cap screws, flat washers, lockwashers, and nuts (FIG. 16).

15. Install a 1" quick coupler on the end of the 1" x 100" supply hose and secure with a hose clamp. Connect the supply hose to the discharge port on the pump with the quick coupler. Route the hose along the left side of the vehicle under the tank, connect to the hose barb on the right side of the tee assembly and secure with a hose clamp (FIG. 16). Secure hose at cable mounting bracket and rear cross member with tie straps.

16. Install the protective hose loom on the 100" pressure hose as shown in FIG. 17. Secure the loom to the hose by tightening a tie strap around each end of the loom so that the loom does not shift front to rear.

17. Connect the 1" x 42" supply hose to the 1" hose barb on the tee assembly and to the 1" hose barb in the control valve. Secure with hose clamps (FIG. 16).

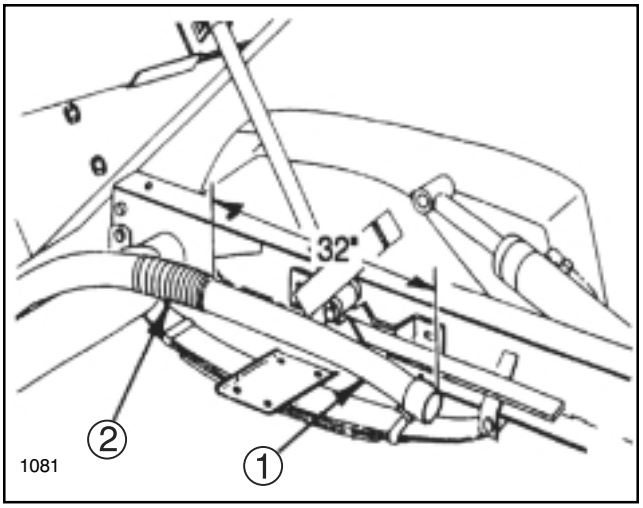

FIG. 17

1. 100" Supply Hose
2. Protective Loom

18. Connect the 3/4" x 28" agitator hose to the 3/4" hose barb in the ball valve and connect to the hose barb on the rear of the tank. Secure the hose with hose clamps (FIG. 16).

19. Connect the 1" x 13" overflow hose to the 90° hose barb in the end of the Bypass Manifold assembly and connect to the 90 degree hose barb on the left side of the rear tank tee. Secure with hose clamps (FIG.16).

20. Connect the 6' extension cable to main harness.

21. Connect the gauge tube at the 1/4" reducer bushing in the end of the solenoid valve and connect at the main console cable.

RADIATOR COVER & FINAL CHECKS:

1. Mount the radiator cover to the vehicle frame using the (4) 3/8" x 1" hex hd cap screws and (4) flat washers.

2. Secure the tank skid to the vehicle frame by installing the (2) 1/2" bolts, (4) washers, and (2) lock nuts through the attachment mounting brackets (FIG. 10). Tighten fasteners securely.

3. Attach the suction hose to the suction strainer using the quick couplers.

4. Tighten all fasteners and hose clamps securely before using sprayer.

5. Fill the tank with clean water and check for any leaks.

6. Refer to the Manual Spray Systems Owner's Manual for the proper calibration and operation of the Manual Spray System.



Part No. 75-5190: Located on Radiator Cover top, front & rear (2).



Part No. 92-2663: Located at Fuse Block (1).

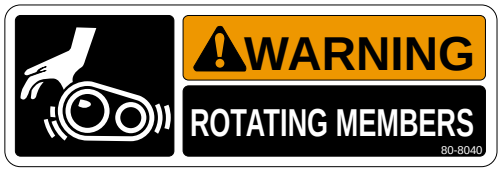

Part No. 80-8040: Located on Radiator Cover top, front & rear (2).



Part No. 87-0570: Located on rear Tank Band (2).



Part No. 36-3400: Located on Radiator Cover top sides (2).



Part No. 92-2669: Located on Tank Skid - left side @ strut (2).



Part No. 93-0688: Located on Tank Lid (1).



Part No. 62-5550: Located on Tank sides (2).

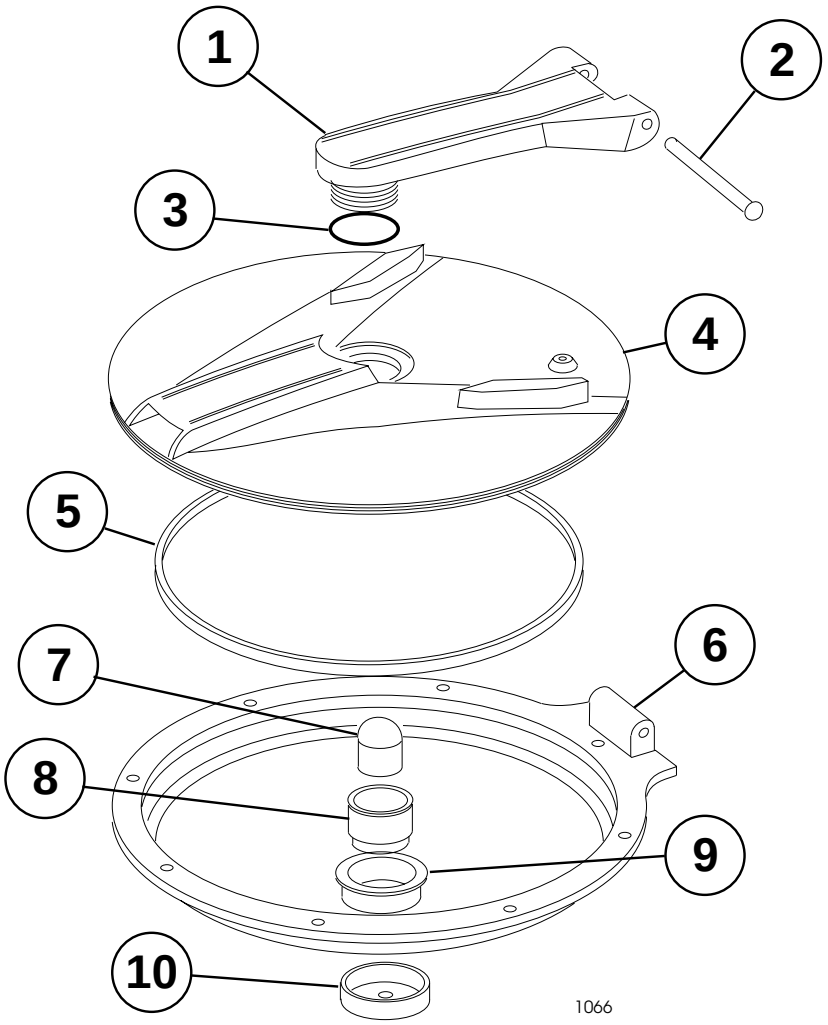

TANK LID ASM (94-7088)

Ref	Part No.	Description	Qty
1	94-7205	Swivel Arm	1
2	94-7213	Pivot Pin	1
3	94-7206	O-Ring, EPDM	1
4	94-7207	Spray Tank Lid	1
5	94-7208	Gasket EPDM	1

Ref	Part No.	Description	Qty
6	94-7211	Tank Lid Ring	1
	93-0833	Aluminum Pop-Rivet	8
7	94-7209	Breather Plunger	1
8	94-7210	Breather Body	1
9	94-7212	Breather Nut	1
10	94-7214	Breather Cap	1

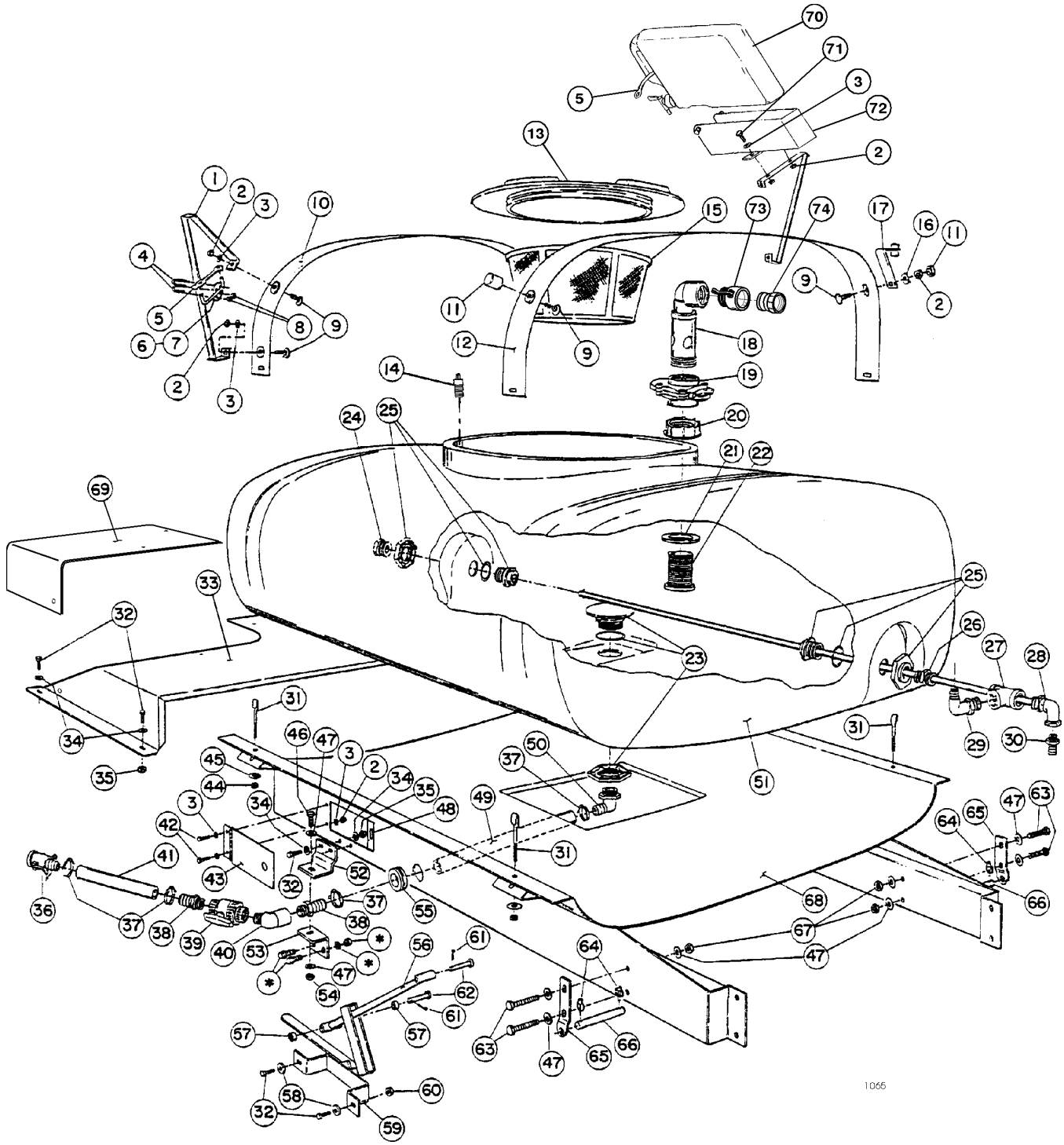

SKID & TANK (200)

* INDICATES FASTENERS INCLUDED WITH THE VEHICLE

SKID & TANK (200)

Ref	Part No.	Description	Qty
1	42983	Hold-In Brace ASM	2
2	3217-6	Hex Nut, 5/16	12
3	3256-23	Flat Washer, 5/16 S.A.E.	14
4	92-0010	U-Bolt, 1/4	4
5	42198	Rubber Hold-Down Strap	3
6	42259	Boom Hold-In - LH (shown)	1
7	42316	Boom Hold-In - RH (opposite)	1
8	3217-5	Hex Nut, 1/4	8
9	3230-9	Carriage Bolt, 5/16 x 3/4	6
10	92-3666	Tank Band - Front	1
11	42452	Protective Cap	2
12	3253-4	Lock Washer, 5/16	1
13	94-7088	Tank Lid, Hinged (f/w Tank ASM)	1
14	93-1092	Drain Plug	1
15	42323	Filler Basket - 16" (f/w Tank ASM)	1
16	92-3667	Tank Band - Rear	1
17	42277	Pressure Gauge Bracket	1
18	43069	Stand-Up ASM	1
19	43064	Knife Valve	1
20	43068	Fly Nut, 2" NPT	1
21	43067	Sealing Washer	1
22	43066	Bulk Head, 2" NPT	1
23	41798	Anti-Vortex Fitting, 1-1/4 NPT (f/w Tank ASM)	1
24	41315	Hex Plug, 1" NPT	1
25	41800	Tank Fitting, 1" NPT (f/w Tank ASM)	1
26	41304	Close Nipple, 1" NPT	1
27	41305	Tee, 1" NPT	1
28	92-3630	Agitator Tube ASM	1
29	41140	90° Elbow, 1" NPT x 1"	1
30	41257	Hose Barb, 3/4 NPT x 3/4	1
31	92-3668	"J" Bolt	4
32	323-6	HHCS, 3/8 x 1"	10
33	93-6199	Radiator Cover	1
	92-3627	Trim - 5 5/8"	1
	42657	Trim - 26"	1
34	3256-24	Flat Washer, 3/8"	12
35	32717-7	Hex Nut, 3/8	6
36	40480	Female Quick Coupler, 1"	1
37	21146	Hose Clamp	4
38	92-0012	Hose Barb, 1" NPT x 1"	2
39	40020	Ball Valve, 1" NPT	1
40	41307	90° St. Elbow, 1" NPT	1
41	94-8506	Suction Hose, 1" x 21"	1
42	322-3	HHCS, 5/16 x 3/4	4
43	92-0135	Door ASM	1
44	3217-8	Hex Nut, 7/16	4
45	3256-5	Flat Washer, 7/16	4
46	325-6	HHCS, 1/2 x 1 1/2"	2
47	3256-26	Flat Washer, 1/2 S.A.E.	12
48	92-3700	Door Magnet	2
49	92-3677	Suction Hose, 1" x 30"	1
50	42057	90° Elbow, 1 1/4" MPT x 1"	1
51	92-8172	Tank ASM - 200 Gal.	4
52	92-0159	Front Mounting Bracket	1
53	92-2667	Attach. Mounting Bracket	1
54	32153-5	Lock Nut, 1/2	2
55	40764	Grommet	1
56	92-3750	Strut ASM	1
57	92-0303	Pivot Spacer	2
58	356308	Washer, #10 ga.	2
59	92-3690	Strut Support Bracket ASM	1
60	321397	Flange Nut, 3/8	2
61	3272-11	Cotter Pin, 1 1/8 x 1"	2
62	42195	Clevis Pin, 1/2" x 2	2
63	325-11	HHCS, 1/2 NC x 2 2/4"	4
64	92-1298	Lynch Pin	4
65	92-0158	Pivot Lug	1
66	92-1233	Clevis Pin, 3/4 x 4 7/16"	2
67	3217-9	Hex Nut, 1/2 NC	4
68	92-8173	Skid ASM	1
	92-3752	Cutout Trim	1
	92-3753	Cutout Trim	1
69	93-6427	Radiator Cover - Panel	1
	32144-10	Hex WS Screw, 1/4 x 5/8	3
70	92-3976	Clean Water Wash Tank	1
71	322-5	HHCS, 5/16 x 1"	2
72	92-3969	Wash Tank Bracket	1
73	92-0238	Quick Coupler	1
74	041316	Quick Adapter	1

* Not Illustrated

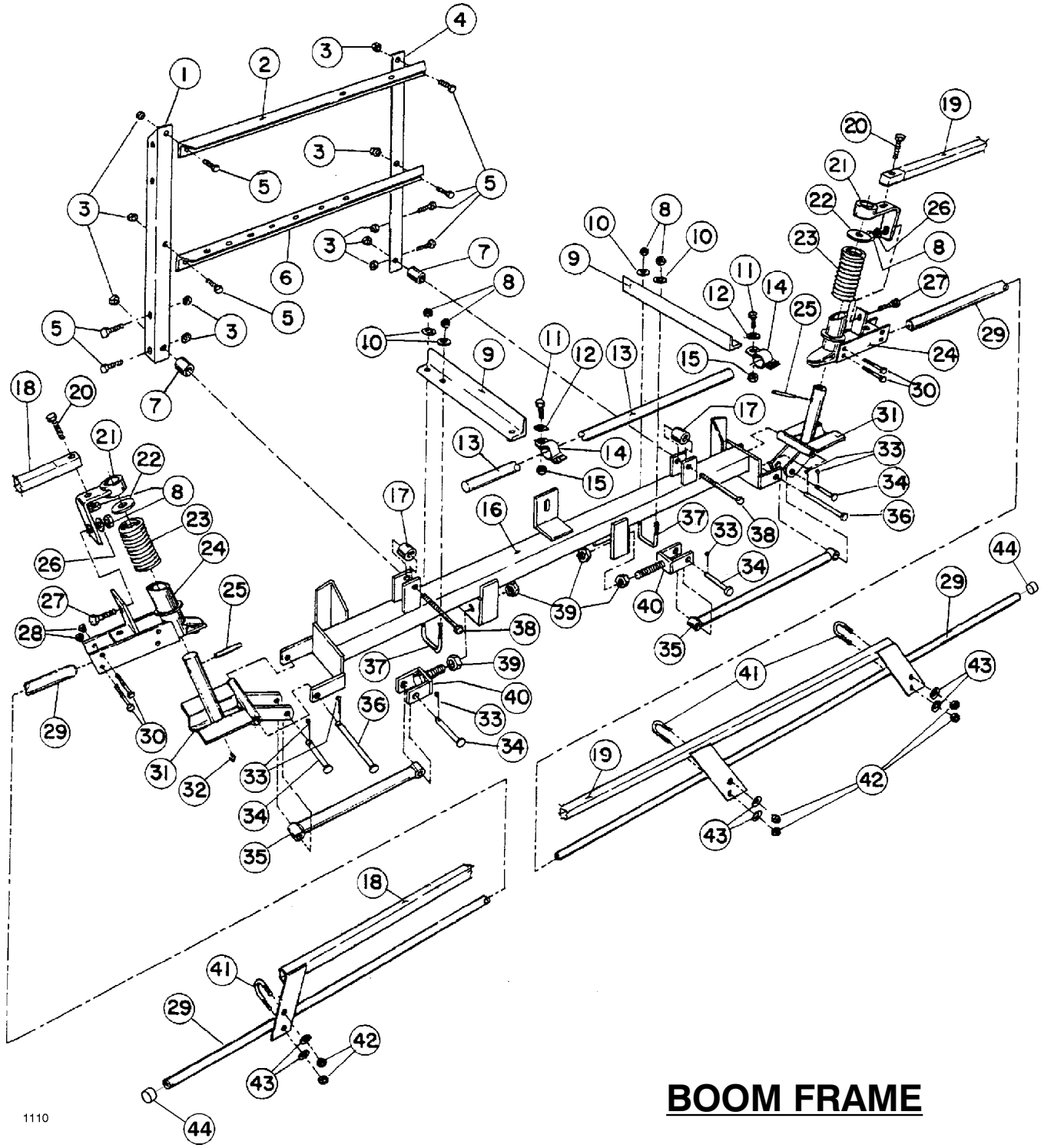

BOOM FRAME

BOOM FRAME

Ref	Part No.		Qty
1	92-3671	Boom Mtg. Angle - LH	1
2	92-3672	Cross Angle - Upper	1
3	32153-5	Lock Nut, 1/2	10
4	92-3670	Boom Mtg. Angle - RH	1
5	325-5	HHCS, 1/2 x 1-1/4	8
6	42225	Cross Supprot Angle	1
7	42258	Spacer Tube, 1-1/4" Lg.	2
8	3217-6	Hex Nut, 5/16	8
9	42234	Center Boom Angle	2
10	3256-3	Flat Washer, 5/16	4
11	323-6	HHCS, 3/8 x 1"	2
12	3256-4	Flat Washer, 3/8	2
13	40493	Center Boom Pipe	1
14	40494	Clamp ASM	2
15	32153-2	Lock Nut, 3/8	2
16	42227	Main Frame Tube-W.A.	1
17	42257	Spacer Tube, 1" Lg.	2
18	42711	Boom Support ASM, LH	1
19	42710	Boom Support ASM, RH	1
20	322-7	HHCS, 5/16 x 1-1/2"	2
21	42707	Support Bracket ASM	2
* 22	3256-62	Flat Washer, 1" S.A.E.	2

Ref	Part No.	Description	Qty
*23	42196	Compression Spring	2
*24	42706	Breakaway Pivot ASM	2
*25	32121-78	Spring Pin, 1/2 x 2"	2
26	3256-23	Flat Washer, 5/16 S.A.E.	2
27	3230-1	Carriage Bolt, 5/16 x 3/4	2
28	32146-17	Lock Nut, 1/4 NC	8
29	42282	Ext. Boom Pipe ASM	2
30	321-10	HHCS, 1/4 x 1-3/4	8
*31	42243	Hinge ASM	2
32	361011	Grease Fitting	2
33	3272-11	Cotter Pin, 1/8 x 1"	6
34	42195	Clevis Pin, 1/2 x 2"	4
35	42240	Strut ASM	2
36	42194	Clevis Pin, 1/2 x 4-1/2"	2
37	301950	U-Bolt, 5/16	2
38	325-17	HHCS, 1/2 x 4"	2
39	3217-11	Hex Nut, 5/8	4
40	42237	Adjustable Clevis ASM	2
41	92-0010	U-Bolt, 1/4	4
42	32146-17	Lock Nut, 1/4	8
43	3256-2	Flat Washer, 1/4	8
44	92-8420	Boom Cap	4

* Denotes parts that are available in an assembled unit.
Order #42840 Breakaway ASM.

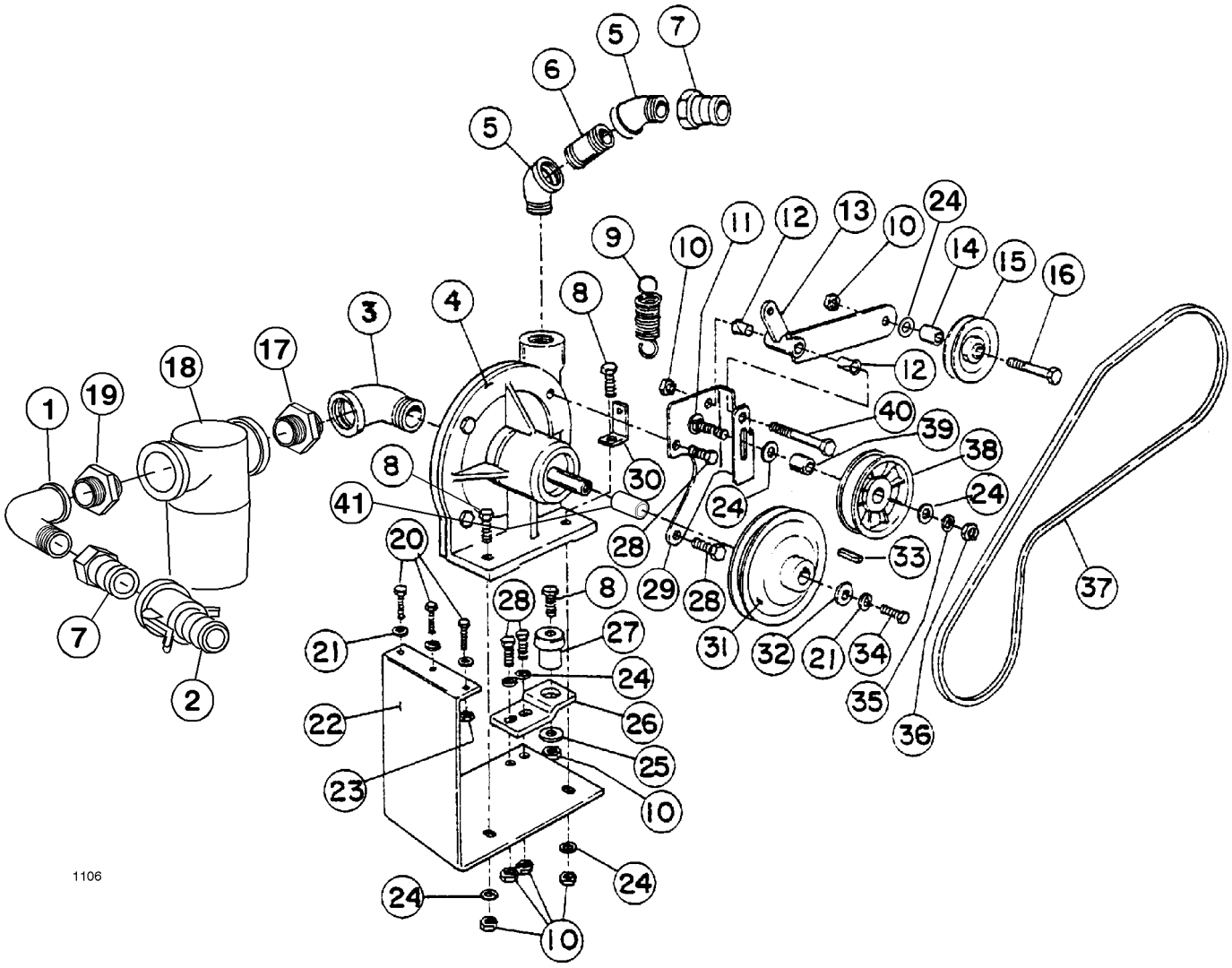

SPRAYER PUMP ASSEMBLY (3000)

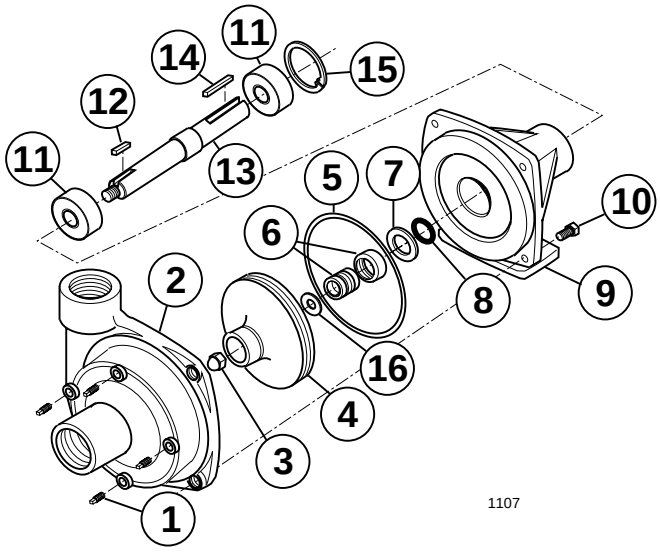

CENTRIFUGAL PUMP (93-6505)

SPRAYER PUMP ASM (3000)

Ref	Part No.	Description	Qty
1	41307	1" 90° Street Elbow	1
2	40480	Quick Coupler x 1"	1
3	93-0887	90° St. Elbow, 1-1/4"	1
4	93-6505	Centrifugal Pump	1
5	5706	45° St. Elbow, 1"	2
6	92-3731	Nipple, 1" x 3'	1
7	41316	Quick Adapter, 1"	2
	41318	Dust Cap	2
8	323-8	HHCS, 3/8 x 1-1/2"	3
9	67-1440	Tension Spring	1
10	32153-2	Lock Nut, 3/8	7
11	3231-7	Carriage Bolt, 3/8 x 2"	1
12	52-2890	Nyliner Bushing	2
13	92-3742	Idler Pivot ASM	1
14	92-3727	Idler Spacer (Inside)	1
15	68-0030	Idler Pulley (Inside)	1
16	323-13	HHCS, 3/8 x 2-3/4"	1
17	92-0050	Close Nipple, 1-1/4"	1
18	42701	Suction Strainer	1
	93-0687	Bowl	1
	94-7065	Strainer Screen 20 mesh std (f/w 42701)	1
	42702	Strainer Screen 40 mesh (optional)	AR
	42703	Strainer Gasket (f/w 42701)	AR
19	42992	Reducing Nipple, 1-1/4 x 1"	1
20	322-5	HHCS, 5/16 x 1"	3
21	3253-4	Lock Washer	4
22	93-3725	Pump Mounting Bracket	1
23	3217-6	Hex Nut, 5/16	3
24	3256-4	Flat Washer, 3/8	7
25	356308	Special Washer	1
26	92-3726	Tab Mount	1
27	63-9750	Rubber Mount	1
28	323-6	HHCS, 3/8 x 1"	4
29	92-3740	Pump Bracket	1
30	92-3741	Spring Tab	1
31	92-2629	Pump Pulley	1
32	356303	Special Washer	1
33	92-0049	Sq. Key, 3/16 x 1-1/4"	1
34	322-3	HHCS, 5/16 x 3/4	1
35	3253-11	Lock Washer, 3/8	1
36	3217-7	Hex Nut, 3/8 NC	1
37	54-1360	Drive Belt	1
38	41353	Idler Pulley (Backside)	1
39	92-3746	Idler Spacer (Backside)	1
40	323-14	HHCS, 3/8 NC x 3"	1
41	94-8502	Pulley Spacer	1

CENTRIFUGAL PUMP (93-6505)

Ref	Part No.	Description	Qty
1	42084	Drain Plug	4
2	94-8503	Pump Casting	1
3	42086	Impeller Nut	1
4	94-8504	Impeller	1
*5	42089	O-Ring	1
*6	42088	Mechanical Seal (Viton)	1
7	93-0924	Seal Retainer	1
8	42092	Singer Ring	1
9	93-0925	Mounting Flange	1
10	323-6	Bolt	4
11	93-0927	Ball Bearing	2
12	93-0928	Key	1
13	94-8505	Pump Shaft	1
14	93-0930	Key	1
15	42093	Bearing Retainer	1
*16	93-0931	Gasket	1

*Denotes parts included in Seal/O-Ring Repair Kit.
Order Part No. 94-8520

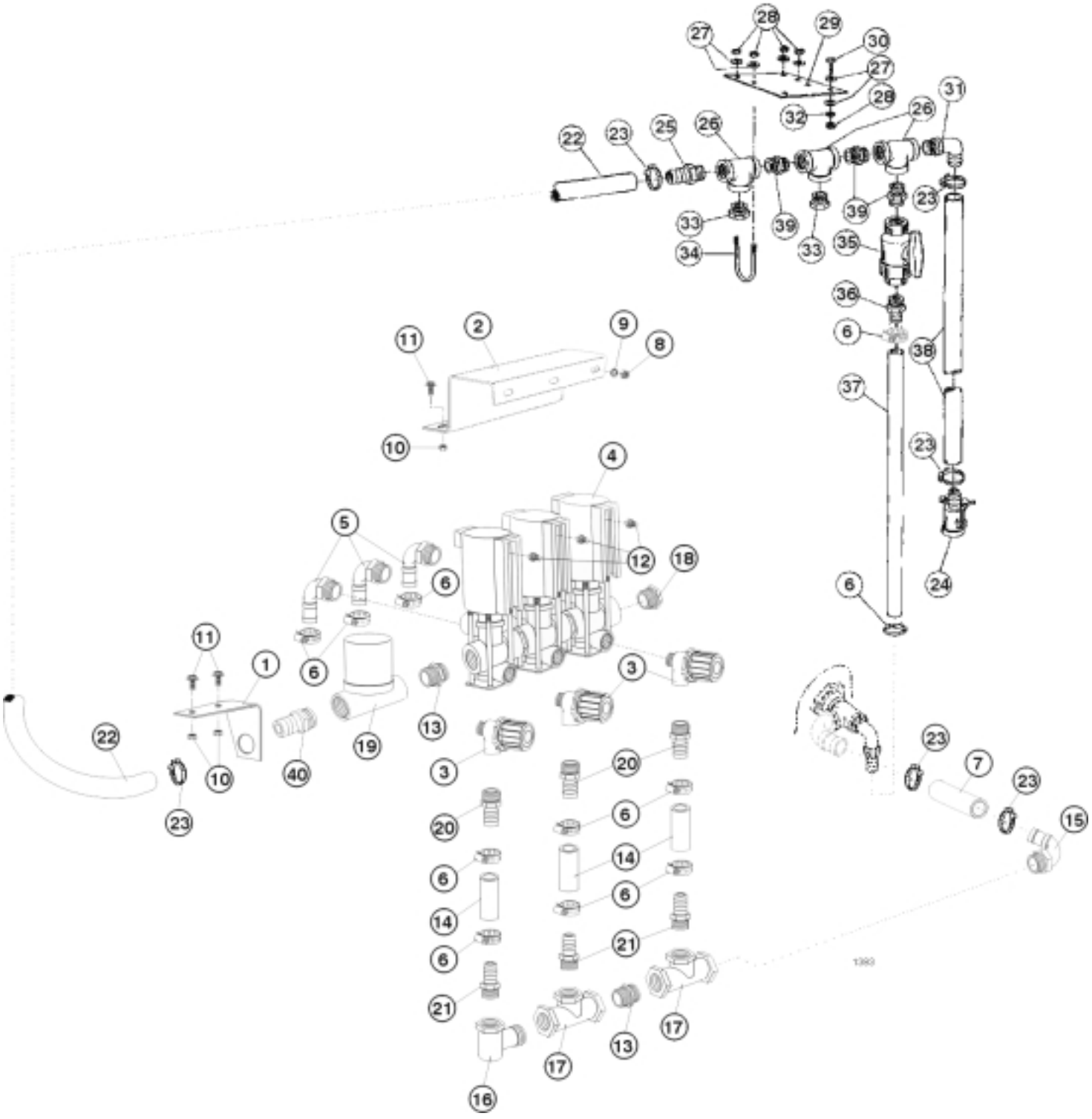

27
28
29
30
27
28
32
31
26
22
23
25
26
23
39
39
33
33
34
35
36
6
38
37
23
24
6
11
2
9
8
10
4
5
12
18
6
6
11
1
6
3
13
19
40
22
10
23
3
20
20
6
14
6
14
6
21
6
21
17
13
17
16
23
7
23
15

MANUAL SPRAY SYSTEM (3000)

Ref	Part No.	Description	Qty
1	99-0529	Control Valve Bracket	1
2	99-0528	Solenoid Valve Bracket	1
3	42872	Throttling Valve	3
4	99-0530	Bypass Solenoid Valve ASM	1
	99-0536	Single Solenoid	AR
5	92-8557	Hose Barb, 90° 1/2" x 3/4" H.B.	3
6	92-0045	Hose Clamp	11
7	99-0539	Hose Bypass, 3/4" x 13"	1
8	43-2830	Hex Nut, M6-1	3
9	48-8020	Lock Washer	3
10	32128-20	Hex Flange Nut	4
11	3234-5	HHCS	4
12	48-7620	HHCS, M6 x 16mm	3
13	41294	Close Nipple, 3/4" NPT	2
14	42944	Connector Hose, 3/4" x 2-1/2"	3
15	99-0531	90° Hose Barb, 3/4" x 1" H.B.	1
16	42940	St. Elbow, 3/4" NPT	1
17	42941	Tee, 3/4" NPT	2
18	41310	Reduer Bushing, 3/4" x 1/4"	1
19	42936	Control Valve	1
20	41313	Hose Barb, 1/2 x 3/4" H.B.	3

Ref	Part No.	Description	Qty
21	41257	Hose Barb, 3/4" x 3/4" H. B.	3
22	92-3696	Supply Hose, 1" x 42"	1
23	21146	Hose Clamp	6
24	40480	Quick Adapter	1
25	92-0012	Hose Barb, 1" x 1" H.B.	1
26	41305	Tee, 1" NPT	3
27	3256-23	Flat Washer	8
28	3217-6	Hex Nut	6
29	92-3675	Manifold Mount Plate	1
30	322-5	HHCS	7
31	41140	90° Elbow, 1" x 1" H.B.	1
32	3253-4	Lock Washer	2
33	41315	Hex Plug, 1" MPT	2
34	92-3723	U-Bolt, 5/16	2
35	40020	Ball Valve, 1" NPT	1
36	92-0236	Hose Barb, 1" x 3/4" H.B.	1
37	92-3721	Agitator Hose, 3/4" x 28"	1
38	92-3707	Supply Hose 1" x 100"	1
39	41304	Close Nipple, 1" NPT	3
40	41730	Hose Barb, 3/4" x 1" H.B.	1

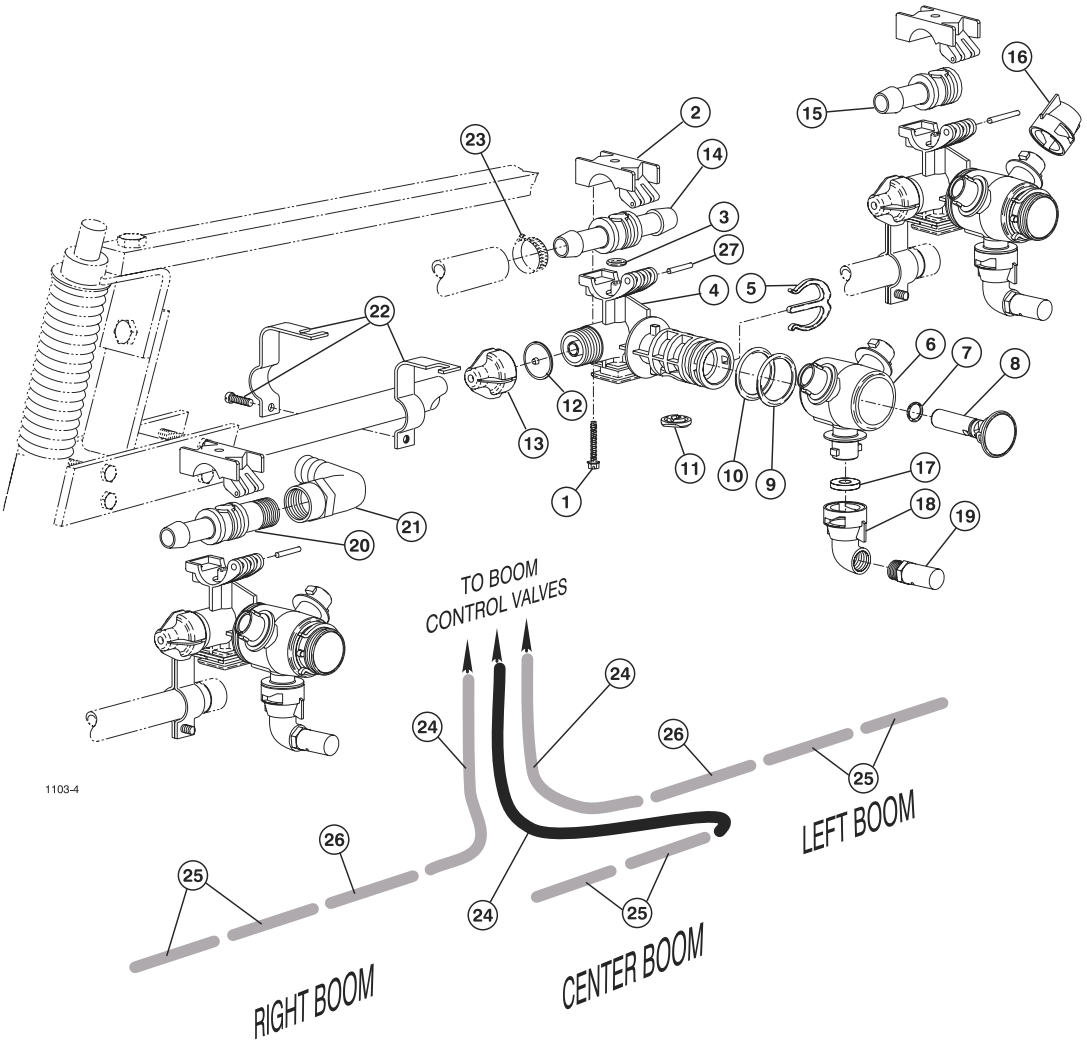

TURRET BODIES & BOOM HOSES

Ref	Part No.	Description	Qty
*	95-9183	Turret Body - Doubvle Barb (Incl. Ref. #'s 1-14)	7
*	95-9181	Turret Body - Single Barb (Incl. Ref #'s 1-13 & 15)	3
*	95-9184	Turret Body - Barb x 1/2 NPT (Incl. Ref. #'s 1-13 & 20)	1
1	99-0811	Screw	1
2	99-0812	Upper Clamp	1
† 3	95-9191	O-Ring	1
4	95-9192	Split-Eyelet Body	1
5	95-9197	E-Clip	1
6	95-9196	Turret	1
† 7	95-9198	O-Ring	1
8	95-9200	Plug	1
† 9	95-9199	O-Ring	1
†10	99-0815	O-Ring Dust Seal	1
†11	99-0813	Seal	1
†12	41003	Diaphragm	1
13	95-9193	End Cap ASM	1
14	95-9202	Double Hose Barb	1

Ref	Part No.	Description	Qty
15	95-9201	Single Hose Barb	4
16	95-9187	Nozzle Dust Cap (Incl. Ref. #16)	22
17	40998	Seat Gasket	33
18	95-9186	Nozzle Cap, 90° (Incl. Ref. #16)	11
19	95-9188	TTJ10 Turbo TurfJet (Std.)	11
	95-9221	TTJ2 Turbo TurfJet (Optional)	11
	95-9222	TTJ4 Turbo TurfJet (Optional)	11
	95-9223	TTJ5 Turbo TurfJet (Optinal)	11
	95-9224	TTJ6 Turbo TurfJet (Optional)	11
	95-9225	TTJ8 Turbo TurfJet (Optional)	11
	95-9226	TTJ15 Turbo TurfJet (Optional)	11
20	95-9203	Hose Barb x 1/2" NPT	1
21	95-9314	90° Elbow, 1/2" FPT x 3/4" H.B.	1
22	95-9185	Turret Body Clamp	11
23	92-0045	Hose Clamp, 3/4" Hose	22
24	41340	Boom Hose, 3/4" x 50"	3
25	40506	Jumper Hose, 3/4" x 19"	6
26	95-2229	Jumper Hose, 3/4 " x 1"	2
27	99-0814	Pivot Pin, 303 SS	1

† Denotes parts in Seal Kit #99-0816
* Not Illustrated

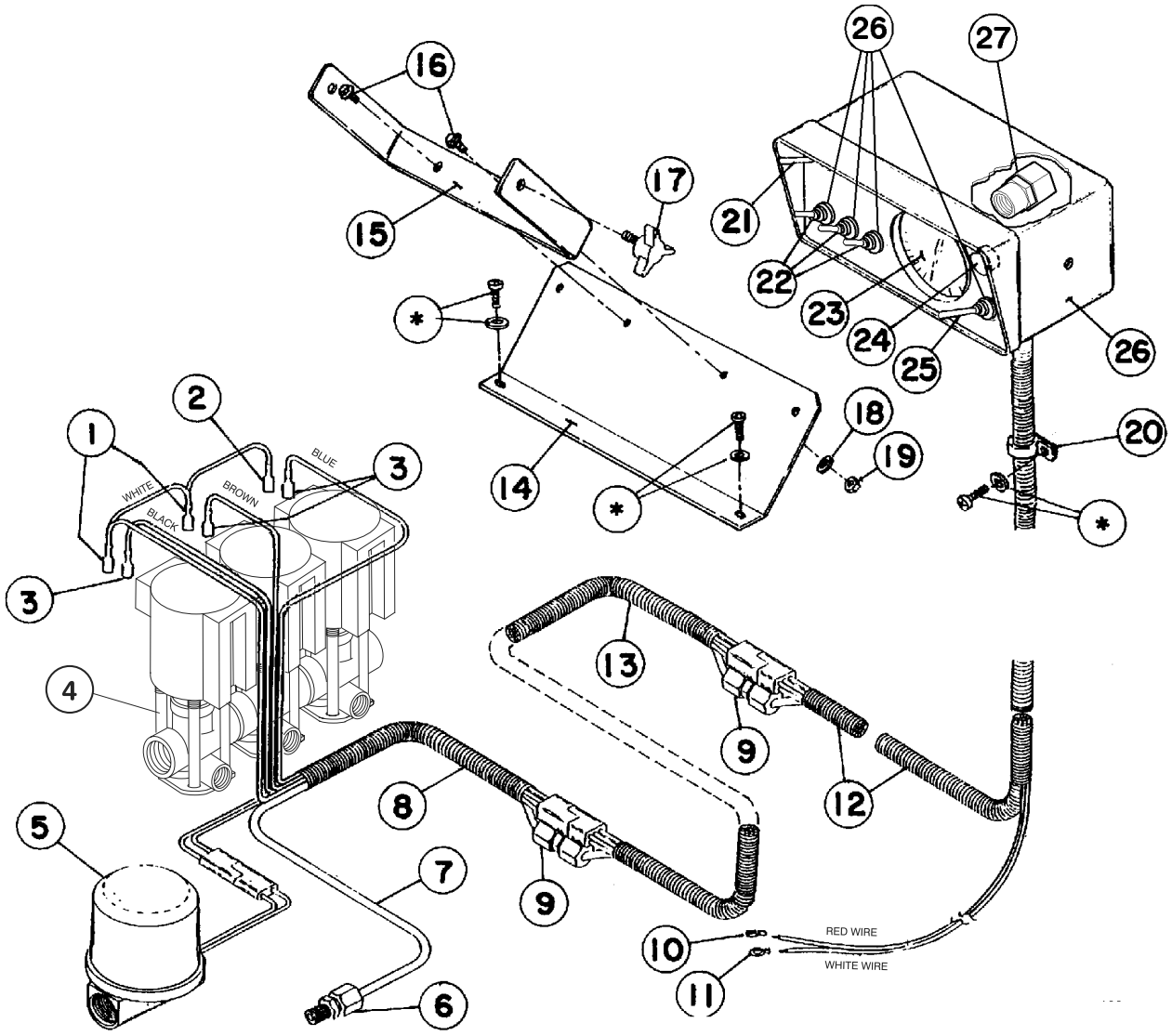

1381

CONTROL CONSOLE (3000)

Ref	Part No.	Description	Qty
1	42933	12-10 AWG Female Terminal	2
2	42934	16-14 AWG Female Terminal	1
3	42932	Insulated Female Terminal	3
4	99-0530	Solenoid Valve ASM	1
	99-0536	Single Solenoid	3
5	42936	Control Valve	1
6	42931	Male Fitting	1
7	42930	Tubing	1
8	42935	72" Cable ASM (Valve Hook-up)	1
9	42929	Union Fitting	2
10	41276	Push-On Terminal, 5/16	1
11	92-3716	Ring Terminal, 5/16	1
12	42928	96" Cable ASM (Encl. Hook-up)	1
13	92-3733	72" Extension Cable ASM	1
14	92-3679	Console Mount Bracket	1

Ref	Part No.	Description	Qty
15	42920	Mounting Bracket	1
16	32144-10	Washer Hd. Screw, 1/4 x 5/8	2
17	42922	Knob	2
18	3256-2	Flat Washer, 1/4	2
19	3217-5	Hex Nut, 1/4	2
20	41230	Hose Clamp	1
21	42923	Master Switch	1
22	42921	Boom Switch	3
23	42924	Pressure Gauge (PSI)	1
24	42925	Fuse Holder	1
	42926	15-AMP Fuse	1
25	42927	Pressure Adjust Switch	1
26	42937	Console	1
	42764	20-AMP Fuse (For Fuse Block)	1
27	93-1042	Female Gauge Fitting	1

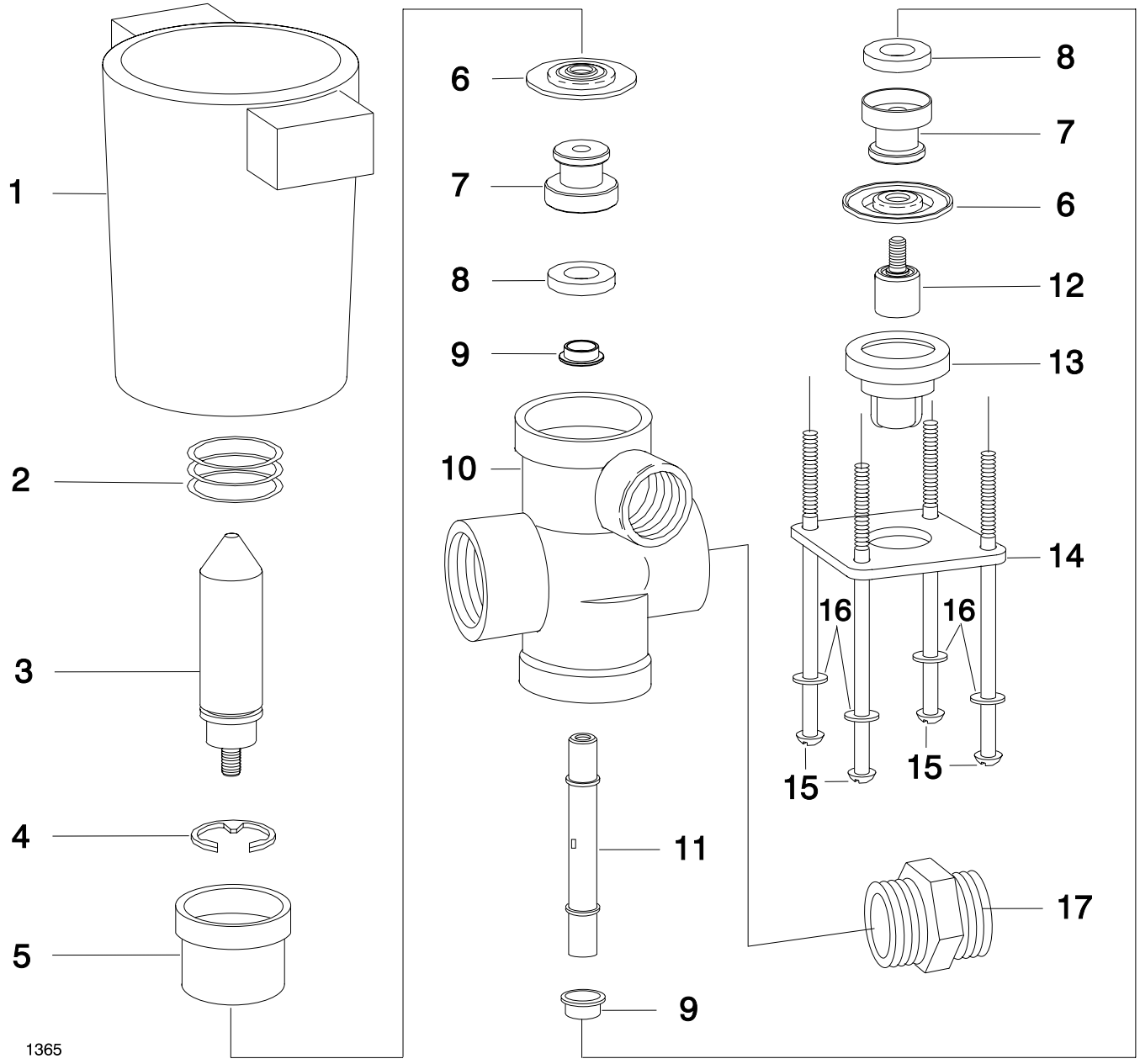

SOLENOID VALVE (99-0536)

Ref	Part No.	Description	Qty
1	95-9317	Coil ASM-Nylon Encapsulated	1
2	†	Spring - Stainless Steel	1
3	95-9318	Armature - Stainless Steel	1
4	95-9319	Retaining Ring - Steel, Plated	1
5	93-1031	Upper Diaphragm House (blk)	1
6	†	Diaphragm - Viton	2
7	93-1034	Seal Washer - Retainer, SS	2
8	†	Seal Washer - Viton	2

Ref	Part No.	Description	Qty
9	42136	Spacer - Stainless Steel	2
10	93-1035	Body - Polypropylene (black)	1
11	92-1036	Stem - SS	1
12	92-0367	Lower Diaphragm Piston - SS	1
13	93-1037	Lower Diaphragm Housing (blk)	1
14	93-1038	Bottom Plate, Steel (blk)	1
15	93-1039	Screw - SS	4
16	99-0545	Lock Washer - Type 18-B, SS	4
17	42884	Connecting Nipple	2

† Indicates parts included in Viton Seal Kit.
Order Part No. 99-0546