FORM NO. 99-0552 REV. B

TORO®

MODEL NO. 41411-90101 & UP
MODEL NO. 41020-90101 & UP
MODEL NO. 41120-90101 & UP
MODEL NO. 41021-90101 & UP

SET-UP AND PARTS LIST

SKID SPRAYER

Refer to the illustrated Parts List for the details of parts used in assembling the SKID SPRAYER.

Note: "Right" and "Left" as used in the following instructions, refer to the operator's right and left when seated in the normal operating position.

Remove the Sprayer Skid from it's shipping skid. For ease of handling, while connecting the Hoses to the Tank, disconnect the 1" x 53" Suction Hose and the 1/2" x 45" Agitator Hose at their respective Quick Couplers. See FIG. 1.

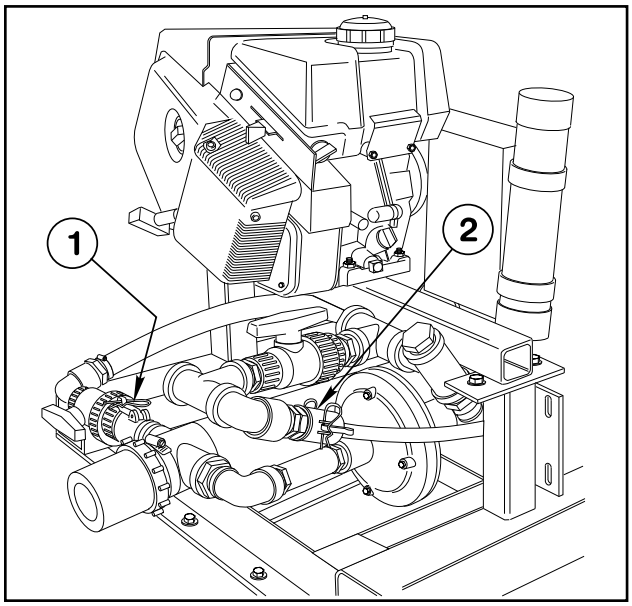

FIG. 1

1. Suction Hose Quick Coupler
2. Agitator Hose Quick Coupler

TANK ASSEMBLY:

1. Cut the shipping straps and remove the Spray Tank and Saddle Assembly from the shipping skid.

2. Remove the two screws holding the Heat Shield to the Tank Saddle and discard the Heat Shield.

NOTE: In the following instructions, "thread sealer" refers to Teflon thread tape.

3. Apply thread sealer and install the 90° barbed elbow into the bottom of the Tank. See FIG. 2.

NOTE: Position the barbed elbow as shown, so that it will angle toward the muffler on the Skid Sprayer engine after the Tank is installed on the Skid Frame.

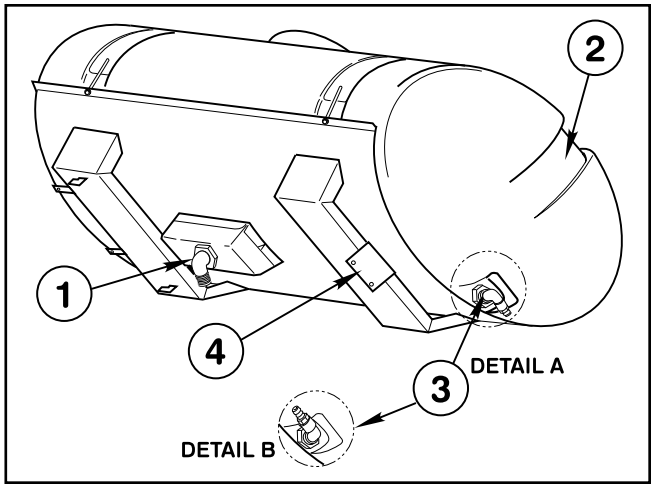

FIG. 2

1. Barbed Elbow (Suction Line)
2. Spill-way
3. Elbow & Quick Coupler (Overflow)
4. Mounting Member

4. Apply thread sealer and assemble the 90° St. elbow to the male Quick Coupler. Install the elbow into the fitting at the spill-way end of the Tank, so that it angles toward the outside of the Tank as shown in FIG. 2.

NOTE: If the Skid Sprayer is to be installed on a Trailer, (as shown in FIG. 4), install the Elbow and Quick Coupler in the Tank as shown in Detail "A" of FIG. 2. If the Skid Sprayer is to be installed on a Transport Vehicle (as shown in FIG. 5), install the Elbow and Quick Coupler as shown in Detail "B" of FIG. 2.

5. Loosen the hose clamp on the Suction Hose and use it to secure the Hose to the barbed elbow in the bottom of the Tank.

©The TORO Company - 2000
All Rights Reserved

6. Loosen the hose clamp on the Agitator Hose and use it to secure the Agitator Hose to the barbed elbow in the end of the Tank. (Opposite the spill-way.)

7. Place the Tank and Saddle Assembly on the Sprayer Skid. Secure it to the Skid frame with two 5/8" x 1-1/2" hex hd cap screws and hex nuts through the mounting member of the Saddle Assembly.

8. Re-connect the Suction and Agitator Hoses at their respective Quick Couplers. Re-connect Boom Hold-ins & Clean Water Wash tank anti-siphon.

BOOM HOLD-IN ASSEMBLY:

1. Mount right Hold-In Brace assembly to the two (2) 5/16" carriage bolts in the front Tank Band using two (2) 5/16" flat washers and hex nuts. Tighten securely. See FIG. 3.

2. Attach right Boom Hold-In assembly to Hold-In Brace assembly using two (2) 1/4" U-bolts and four (4) 1/4" lock nuts. Attach Rubber Hold-Down to Hold-In Brace assembly. Repeat steps 1 and 2 for left side.

3. Mount Wash Tank Bracket (open end forward) to right-hand Hold-In Brace assembly using two (2) 5/16" x 1" hex hd. cap screws, flat washers, and hex nuts. Place Clean Water Wash Tank into Wash Tank Bracket and secure with Rubber Hold-Down, as shown in FIG. 3.

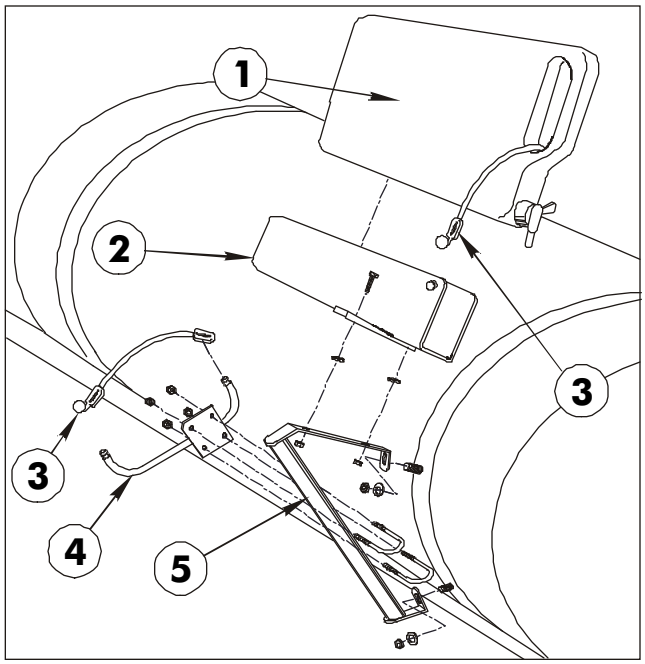

FIG. 3

1. Clean Water Wash Tank
2. Wash Tank Bracket
3. Rubber Hold-Down
4. Boom Hold-In Ass'y
5. Hold-In Brace Ass'y

BOOM ASSEMBLY (TRAILER PACKAGE):

If the Skid Sprayer is to be equipped with the optional Trailer Package (Model No. 41415), mount the Boom as shown in FIG. 4.

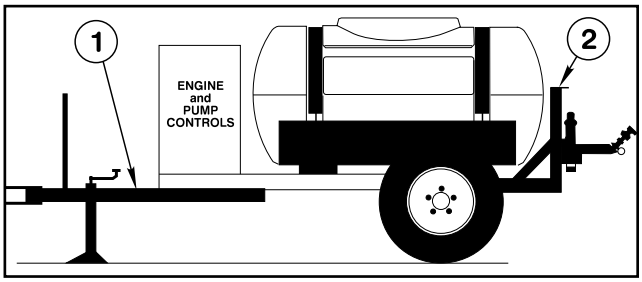

FIG. 4

1. Trailer Package
2. Boom Mount

BOOM ASSEMBLY (TRANSPORT VEHICLE):

The distance between the vehicle bed's mounting surface and the ground level (Nozzle height) will vary with each transport vehicle.

a. If this distance is measured at 24" or less on your vehicle, install the Boom Mounts in the **upright** position. See FIG. 5.

b. If this distance is measured at more than 24" on your vehicle, install the Boom Mounts in the **inverted** position.

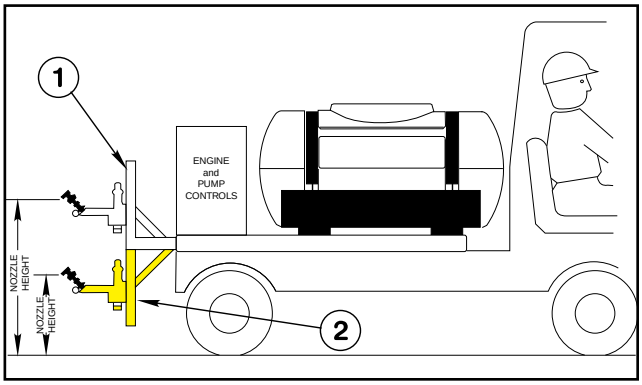

FIG. 5

1. Boom Mount (Upright)
2. Boom Mount (Inverted)

NOTE: Note the position of the angle member of the Boom Mount Assemblies, in relation to the tube member. They must be positioned as shown, for the mounting of the Cross Support Angle. See FIG. 6.

Install the Main Frame Tube at the height that positions the nozzles 20 to 30 inches above the ground.

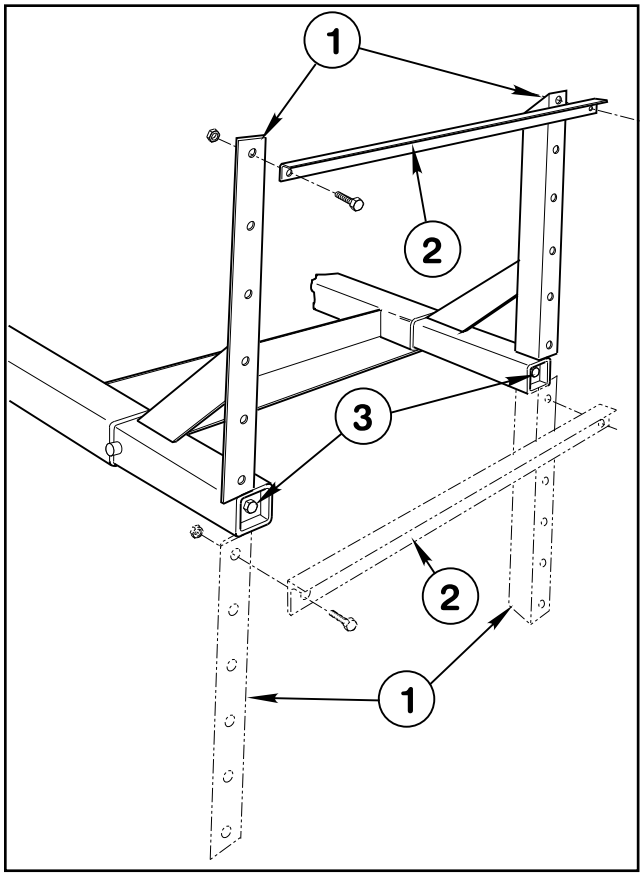

FIG. 6

1. Boom Support Assy.
2. Cross Support Angle
3. Wedge Screw

1. Apply a heavy coating of grease to the tubes of the two Boom Mount Assemblies and insert them into the Vehicle Frame as shown in FIG. 6.

2. Position the Cross Support Angle and attach it to the Boom Mount Assemblies with two 1/2" x 1-1/4" hex hd cap screws, and lock nuts.

NOTE: Steps 1 and 2 apply to the assembly of the Standard Boom only. If the optional "Boom Pivot Kit" is to be installed, see the instructions furnished with that kit. The Cross Support to be used with that kit is different than the Support used on the Standard Boom.

3. Position the Spacer Tubes between the Boom Mount uprights and the lugs on the Main Frame Tube. Use two 1/2" x 4" hex hd cap screws and lock nuts to secure the Main Frame Tube to the uprights. See FIG. 7.

4. Use a torque wrench to tighten the long (1/2" x 18") wedge screws which join the Wedges to the tubes. Tighten to 50 ft. lbs.

IMPORTANT! FAILURE TO TIGHTEN THE WEDGE SCREWS AT 50 FT. LBS. COULD RESULT IN THE BOOM FRAME FALLING OFF THE SPRAYER!

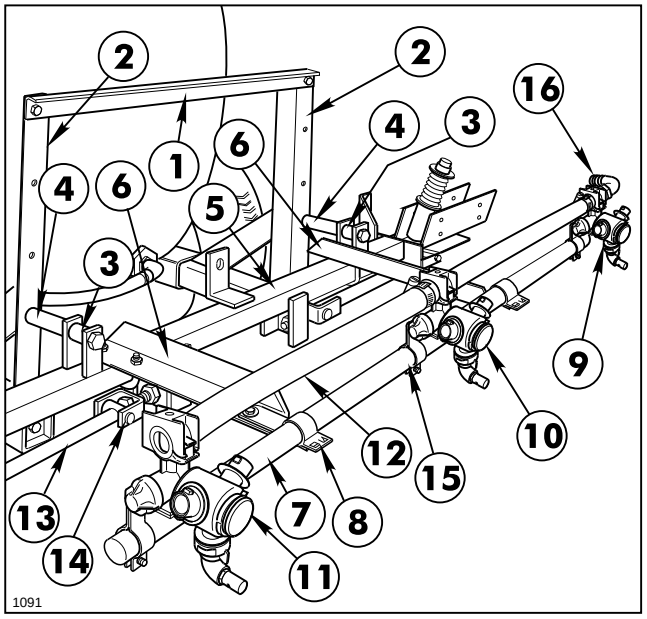

FIG. 7

1. Cross Support Angle
2. Boom Mount Assy.
3. Spacer Tube, 1" lg.
4. Spacer Tube, 1-1/4" lg.
5. Main Frame Tube
6. Center Boom Angle
7. Center Boom Pipe
8. Boom Clamp
9. Threaded Turret Body
10. Double Barb Turret Body
11. Single Barb Turret Body
12. Jumper Hose
13. Strut Assembly
14. Adjustable Clevis
15. Nozzle Body Bracket
16. 90° 3/4" Hose Barb

5. Position the two Center Boom Angles on the Main Frame Tube as shown in FIG. 7 and secure them to the Frame Tube with 2 square “U”-bolts, flat washers, and lock nuts.

6. Center and attach the Center Boom Pipe to the Center Boom Angles with two clamps, 3/8" x 1" hex hd cap screws, flat washers and lock nuts.

7. Loosely attach the Double Barb Turret Assembly in the approximate center of the Center Boom Pipe. For the most uniform spray coverage, position all Assemblies as shown in FIG. 7. Tighten clamp screw to secure the Nozzle to the Boom Pipe.

8. Loosely attach a Single Barb Turret Assembly to the left end of the Center Boom Pipes. Loosely attach the threaded Turret Assembly to right end of Center Boom Pipe. Place two hose clamps on the two 3/4" x 19" Jumper Hoses and connect the Turret Assemblies to the Double Barb Turret. Tighten all fasteners securely. Install 90 3/4" Hose Barb on threaded end of right Turret Assembly.

9. Attach the two Strut Assemblies to the two adjustable clevises found on each side of the Main Frame tube with two (2) 1/2" x 2" clevis pins and two (2) 1/8" x 1" cotter pins. See FIG. 7.

IMPORTANT: DO NOT OVER-TIGHTEN THE NUTS IN STEPS 10 & 11. THE CLAMPING ACTION COULD CRUSH THE BOOM PIPE.

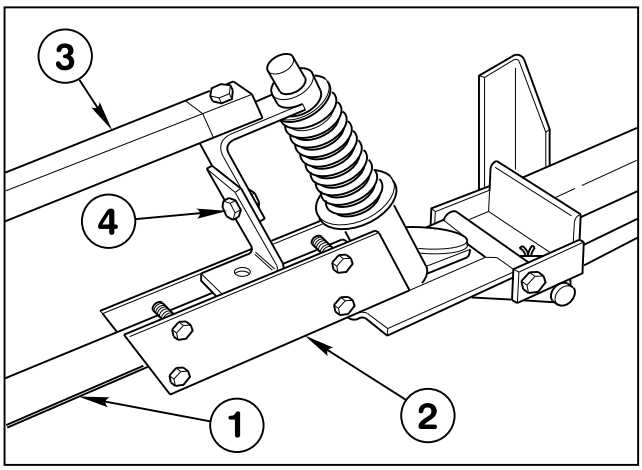

FIG. 8

1. Extension Boom Pipe
2. Pivot Assy.
3. Boom Support Assy.
4. Height Adjustment

10. Insert the plugged end of an Extension Boom Pipe into the Pivot Assembly and secure with four (4) 1/4" x 1-1/4" cap screws and lock nuts. See FIG. 8. Repeat on the opposite side to assemble the other Extension Boom.

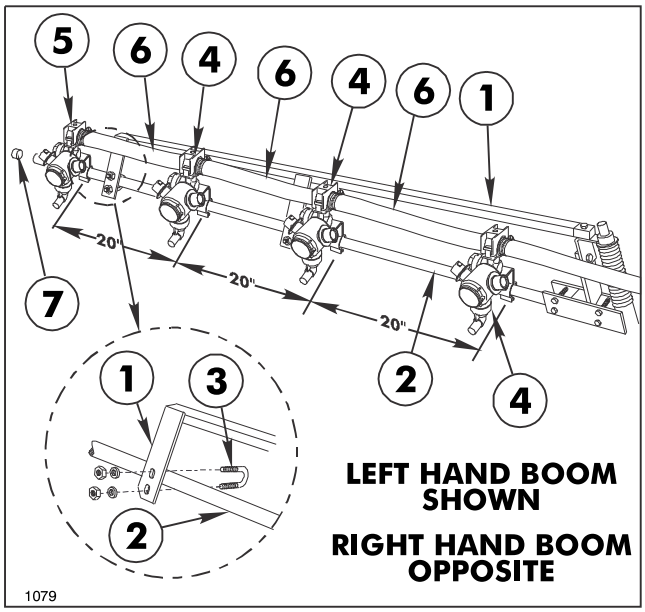

FIG. 9

1. Boom Support Assembly
2. Extension Boom Pipe
3. U-bolt
4. Double Barb Turret Body
5. Single Barb Turret Body
6. Jumper Hose 3/4 x 19"
7. Boom Cap

11. Attach the left Boom Support Assembly to the Pivot Assembly, using a 5/16" x 1-1/2" screw and hex nut. Secure the two plates of the Boom Support Assembly to the Extension Boom Pipe, using two 1/4" U-bolts, four flat washers, and four lock nuts. See FIG. 9.

12. Repeat steps 10 and 11 on the opposite side to assemble the right Boom Support Assembly.

13. Adjust the Booms to a level position by adjusting the jam nuts on the adjustable clevis assemblies (see FIG. 7) to the desired position, then tighten the jam nuts against the Main Frame plate.

14. Attach the three Double Barb and one Single Barb Turret Assemblies on each Extension Boom Pipe. Nozzles are to be level and spaced on 20 inch centers. Connect the Turret Assemblies with the 3/4" x 19" Jumper Hoses. Secure with hose clamps(FIG. 9). NOTE: The two jumper hoses provided with this kit, which are 21", should be cut to 19" for this setup.

15. Install the plastic Boom Caps over the ends of the Boom Pipes.

CONTROL VALVE/SOLENOID ASSEMBLY:

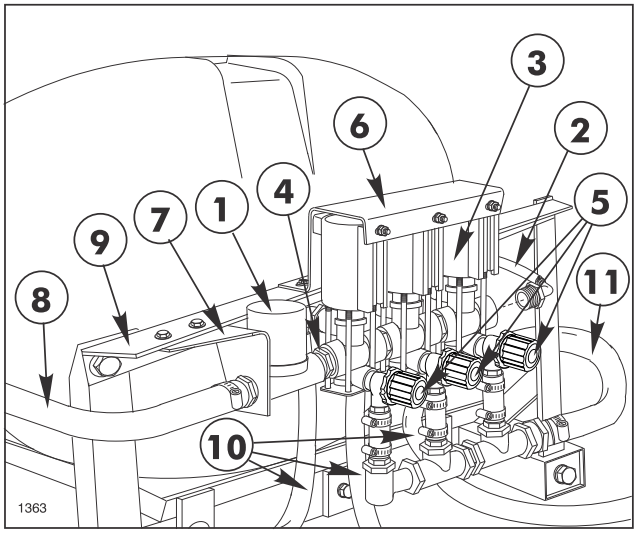

FIG.10

1. Control Valve
2. Pressure Gauge Tube
3. Solenoid Valve Assy.
4. 3/4" Close Nipple
5. Throttling Valve
6. Solenoid Mtg. Brkt.
7. Control Valve Brkt.
8. Supply Hose
9. Cross Support Angle
10. Boom Feeder Hose
11. Return Line

1. Apply thread sealer and assemble all components of the Valve and Solenoid Assemblies, including the Supply and Overflow Hoses, as shown in FIG. 10.

2. On the Solenoid Assembly, connect the black wire on left solenoid, brown on middle solenoid, blue on right solenoid and a white jumper on all three solenoids.

3. Slide head of M6 x 16 mm hex hd. screw to the top of the mounting groove in each Solenoid Valve. Assemble Solenoid Valve Assembly to the Solenoid Mounting Bracket using three (3) M6 x 16 mm screws just installed. Secure Solenoids with three (3) M6 hex nuts and lockwashers. See FIG. 10.

4. Install Solenoid Valve and Bracket Assembly to the Cross Support. Secure with two (2) flange cap screws and Hex Flange Nuts.

5. Install Control Valve Bracket to Cross Support. Secure with two (2) flange cap screws and Hex Flange Nuts. (Do not tighten). See FIG. 10.

6. Place Straight Hose Barb through circular opening in Control Valve Bracket and screw into the inlet port of the Control Valve. Tighten Control Valve Bracket fasteners securely.

7. Connect the Overflow Hose to the Quick Coupler in the spill-way end of the Tank.

Note: If the Boom Frame is installed at the "Tank" end of the Sprayer Skid, the 100" long Overflow Hose will have to be cut to the length required to connect it to the Quick Coupler in the spill-way end of the Tank. Measure very carefully, being sure to allow plenty of Hose for the Quick Coupler connection.

If the Boom Frame is installed at the "Pump" end of the Sprayer Skid, the Overflow Hose will need to be the full 100" length to reach Quick Coupler in the spill-way end of the Tank.

8. Connect the Supply Hose to the male Quick Coupler at the Centrifugal Pump.

9. Connect the Boom Feeder Hoses to the barbs in the Solenoid valve with hose clamps.

10. Place a hose clamp on the Center Boom Feeder Hose and attach it to the 90°hose Barb at the end of the Center Boom Pipe.

11. Place a hose clamp on the right and left Boom Feeder Hoses and attach them to the Double Barb Turrets on the right and left Extension Boom Pipes.

FILL THE TANK WITH CLEAN WATER AND CHECK FOR ANY LEAKS.

CONTROLS:

1. Attach the two Magnets to the bottom of the Sprayer Control Box's Mounting Bracket with two 1/4" x 5/8" hex hd. cap screws, lock washers and hex nuts.

The Magnets used to mount the Sprayer and the optional Sprayer Accessory Control Boxes must be attached to a metal surface. If such a surface is not available, a metal mounting bracket will have to be fabricated.

The optionalSprayer Accessory Control Box is used only when the Foam Marker and/or the Electric Boom Lift Kits are added to the Skid Sprayer. Both of these accessories have their own Set-Up Instructions, which are included with the unit.

2. Determine the most convenient location for mounting the Sprayer Control Box, as that will effect the point where the red and black wires of the Wiring Harness will be connected to the power source. If necessary, the red and black battery wires can be pulled from the split conduit to bring them closer to your Battery. Measure very carefully, being sure to allow plenty of wire for the connections, and cut off any excess wire.

3. Crimp the ring terminals to the stripped ends of the red and black wires. Connect the red wire to the Battery's positive (+) post. Connect the black wire to the negative (-) post.

4. Connect the plugs on the 12 ft. Extension Cable to the cables from the Control Box and the Control Valve. Route the Cables along the Skid Frame and secure with the plastic Sta-Straps provided.

5. Assemble the 1/4" male fitting to the reducer bushing in the end of the Solenoid Valve and connect the Gauge Tube.

PUMP SYSTEM:

WARNING

- **OPERATING THE SKID SPRAYER WITHOUT SAFETY SHIELDS IN PLACE CAN CAUSE PERSONAL INJURY.**
- **DO NOT OPERATE SKID SPRAYER WITHOUT SAFETY SHIELDS IN PLACE!**

Install the Drive Belt on the Engine and Centrifugal Pump Pulleys as shown in FIG. 11.

NOTE: For the sake of clarity, the safety shields have been removed in this illustration. NEVER operate the Sprayer with the Belt Cover or the Belt Shield removed!

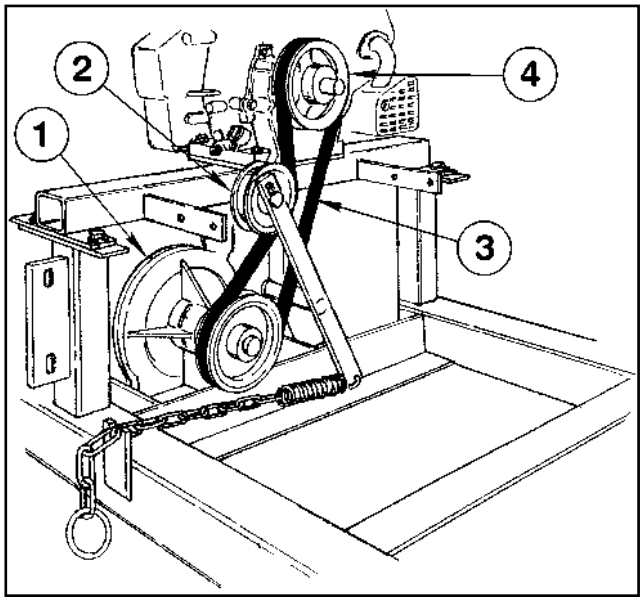

FIG. 10

1. Centrifugal Pump (High Volume)
2. Idler Pulley
3. Drive Belt
4. Engine Pulley

INSTALLING THE SKID SPRAYER ON A TRANSPORT VEHICLE:

Make sure that the weight of the Skid Sprayer and any optional equipment that may be added is within the weight capacity of your transport vehicle. See the chart below for the weights of this unit and it's optional equipment.

Skid Sprayer (Full Tank)	1,973 lbs.
Foam Marker	30 lbs.
Electric Boom	23 lbs.
Manual Hose Reel	150 lbs.
Hi PSI Pump Kit	39 lbs.

1. Position the Skid Sprayer with its Tank as far forward toward the operator's position as possible.

2. Make sure the weight load is centered from side to side within the vehicle bed.

3. Remove one of the bolts which hold the three square tube spacers to the Skid.

4. Using the bolt hole as a template, center punch the vehicle bed and replace the bolt. Repeat the procedure at all six hole locations.

5. Drill six over-size holes in the vehicle bed and secure the Skid to the vehicle bed with 3/8" NC bolts of a length determined by the material thickness of the vehicle bed.

NOTES:

NOTES:

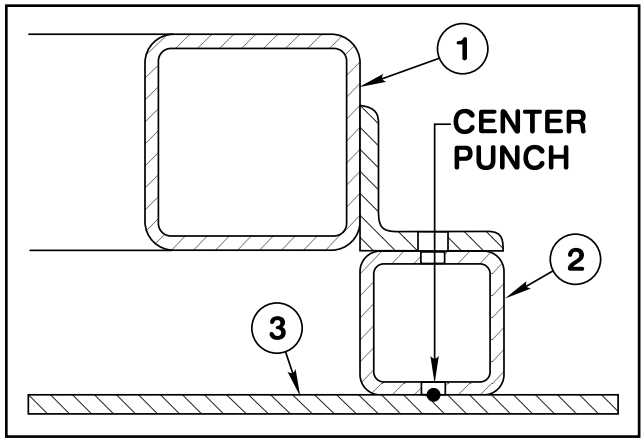

FIG. 11

1. Sprayer Skid
2. Spacer Tube
3. Transport Vehicle Bed

SKID FRAME

Ref.	Part No.	Description	Qty
1	92-0213	Belt Guard ASM	1
2	92-0218	Belt Shield	1
3	32104-95	Hex Washer Hd Self-Tap Screw, 1/4 NC x 5/8"	11
4	42559	Manual Storage Tube	1
5	42560	Storage Tube Bracket	2
6	323-6	HHCS, 3/8 NC x 1"	10
7	3256-4	Flat Washer, 3/8	16
8	323-9	HHCS, 3/8 NC x 1-3/4"	4
9	92-0049	Square Key, 3/16 x 1-1/4"	1
10	41390	Engine Pulley	1
11	3217-7	Hex Nut, 3/8 NC	9
12	356308	Special Washer	2
13	358042	Special Washer	2

Ref.	Part No.	Description	Qty
14	41347	Flange Bearing (f/w Engine Frame ASM	2
15	3272-12	Cotter Pin, 1/8 x 1-1/4"	1
16	92-0208	Idler Arm ASM	1
17	3231-4	Carriage Bolt, 3/8 NC x 1-3/4"	1
18	41353	Idler Pulley	1
19	41721	Spring	1
20	92-0216	Spacer - Front	1
21	92-0200	Engine Frame ASM	1
22	92-0211	Chain ASM	1
23	92-0217	Spacer - Rear	2
24	65-3090	Decal - Instruction	1
25	92-3518	Decal - Application	1
26	87-0450	Decal - Personal Injury	1

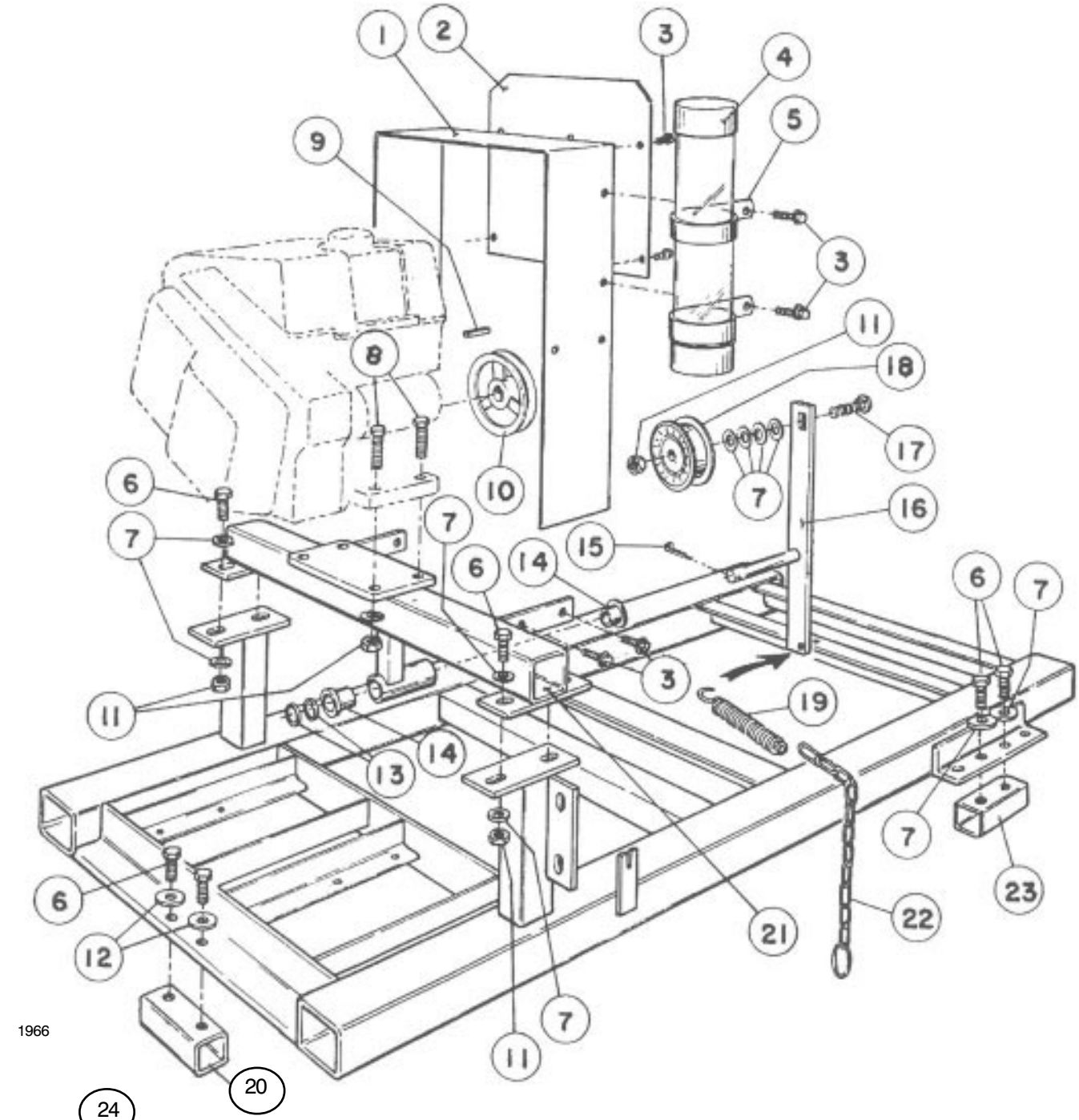

1966

24

READ YOUR OPERATOR'S MANUAL FOR OPERATING AND SAFETY INSTRUCTIONS. TO GET A REPLACEMENT MANUAL, SEND MODEL AND SERIAL NUMBERS TO : THE TORO CO., 8111 LYNDALE AVE. S., MPLS., MN 55420

65-3090

25

DANGER

USE EXTREME CAUTION ON HILLS AND SLOPES

TIP OVER CAN CAUSE SERIOUS INJURY OR DEATH

- Never exceed towing or hauling vehicle's payload capacity.
- Never exceed 20 MPH towing speed. Not for use on highway.
- Place load forward of hauling vehicle's rear axle.
- Never operate on steep slopes.
- Move up and down hills, never across the face.
- Never stop or start suddenly or make sharp turns, especially on hills.
- Never drive close to a ditch, creek or drop-off; stay alert for holes in the terrain and other hidden hazards.
- Read and understand the operator's manual before operating this machine.
- Replacement manual available by sending complete model number to THE TORO COMPANY 811 Lyndale Avenue Minneapolis, MN 55420

92-3518

26

CAUTION

- TO AVOID PERSONAL INJURY KEEP ALL SHIELDS IN PLACE.
- DISENGAGE AND SHUT OFF ENGINE BEFORE SERVICING OR UNCLOGGING MACHINE.
- KEEP HANDS, FEET AND CLOTHING AWAY FROM POWER-DRIVEN PARTS.

87-0450

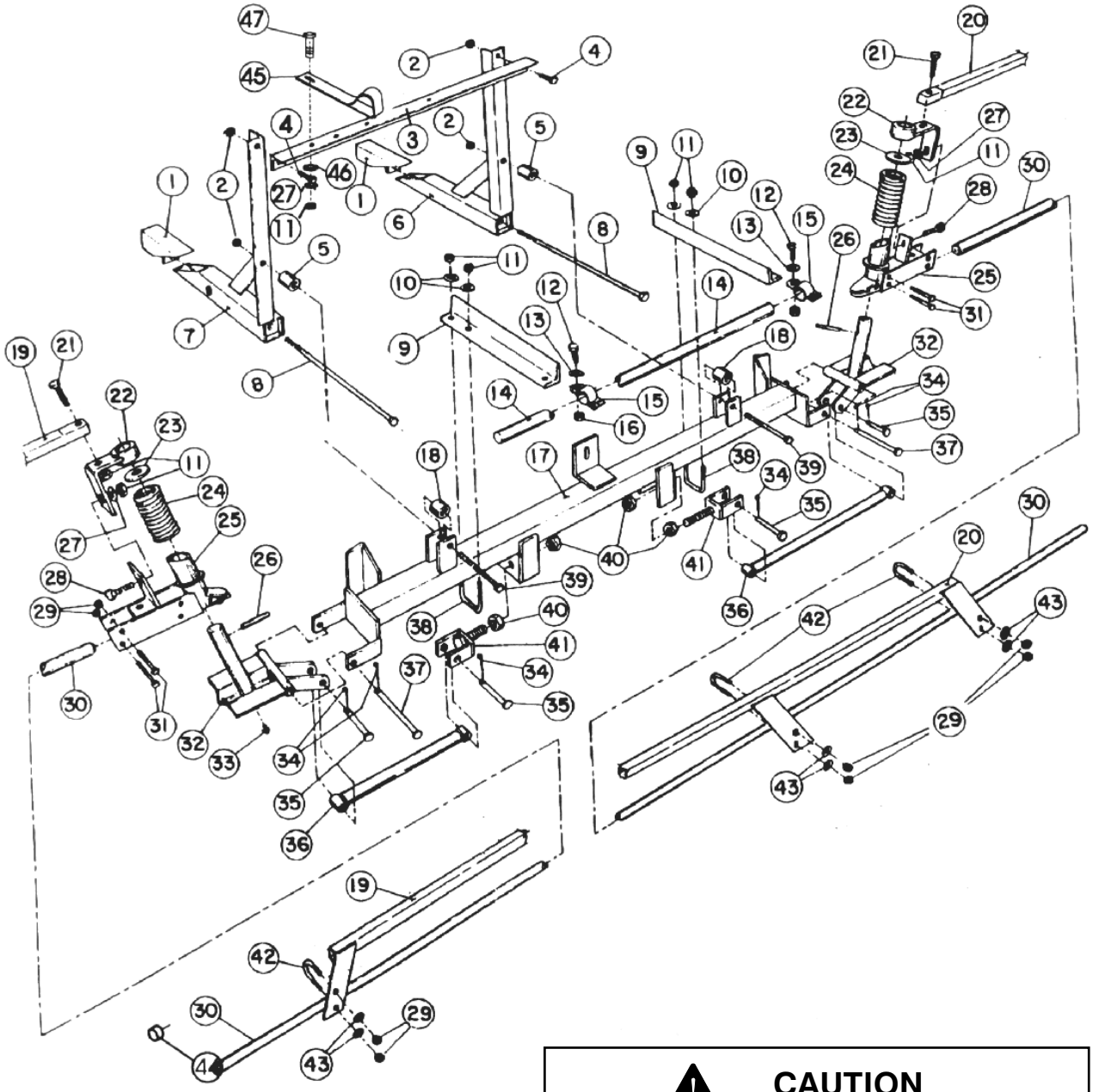

1480

CAUTION

THE TWO SPRINGS (REF. #24) ARE UNDER APPROX. 150 LBS OF PRESSURE. BE VERY CAUTIOUS WHEN REMOVING THE SPRING PINS (REF. #26) FOR REMOVAL OF THE SPRINGS.

IMPORTANT! THE TWO BOLTS (REF. #6) MUST BE TORQUED TO 50' LBS.

BOOM FRAME

Ref.	Part No.	Description	Qty
1	42223	Tube Wedge ASM	2
2	32153-5	Lock Nut, 1/2 NC	4
3	42225	Cross Support Angle	1
4	325-5	HHCS, 1/2 NC x 1-1/4"	2
5	42258	Spacer Tube, 1-1/4" Lg.	2
6	42222	Boom Mount ASM	1
7	42217	Boom Mount ASM	1
8	42199	HHCS, 1/2 NC X 18"	2
9	42234	Center Boom Angle	2
10	3256-3	Flat Washer, 5/16	4
11	3217-6	Hex Nut, 5/16 NC	8
12	323-6	HHCS, 3/8 NC x 1"	2
13	3256-4	Flat Washer, 3/8	2
14	40493	Center Boom Pipe	1
15	40494	Clamp ASM	2
16	32153-2	Lock Nut, 3/8 NC	2
17	42227	Main Frame Tube - Welded ASM	1
18	42257	Spacer Tube, 1" Long	2
19	42711	Boom Support ASM - LH	1
20	42710	Boom Support ASM - RH	1
21	322-17	HHCS, 5/16 NC x 1-1/2"	2
22	42707	Support Bracket ASM	2

Ref.	Part No.	Description	Qty
23*	3256-62	Flat Washer, 1" S. A. E.	2
24*	42196	Compression Spring	2
25*	42706	Breakaway Pivot ASM	2
26*	32121-78	Spring Pin, 1/4 x 2"	2
27	3256-23	Flat Washer, 5/16 S. A. E.	2
28	3230-1	Carriage Bolt, 5/16 NC x 3/4	2
29	32153-4	Lock Nut, 1/4 NC	16
30	42282	Extension Boom Pipe ASM	2
31	321-10	HHCS, 1/4 NC x 1-3.4"	8
32*	42243	Hinge ASM	2
33*	361011	Grease Fitting	2
34	3272-11	Cotter Pin, 1/8 x 1"	6
35	42195	Clevis Pin, 1/2 x 2"	4
36	42240	Strut ASM	2
37	42194	Clevis Pin, 1/2 x 4-1/2"	2
38	301950	U-Bolt, 5/16 NC	2
39	325-17	HHCS, 1/2 NC x 4"	2
40	3217-11	Hex Nut, 5/8 NC	4
41	42237	Adjustable Clevis ASM	2
42	92-0010	U-Bolt, 1/4 NC	4
43	3256-2	Flat Washer, 1/4	8

*Denotes parts that are available in an assembled unit.
Order #42840 Breakaway ASM.

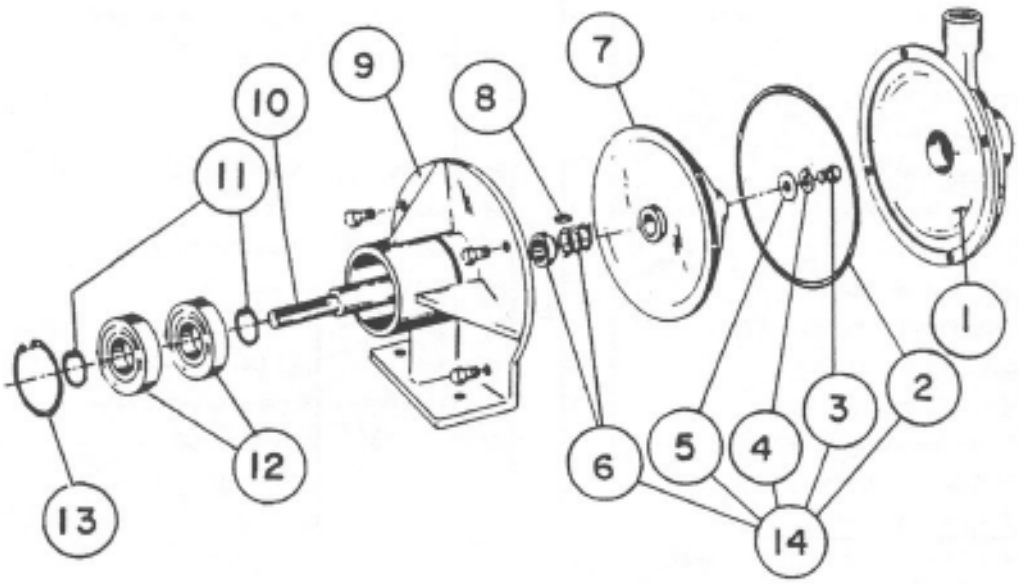

1968

CENTRIFUGAL PUMP (97802)

Ref.	Part No.	Description	Qty
1	27474	Volute	1
2	92-0018	O-Ring	1
3	27484	Cap Screw, 5/16 x 1/2 SS	1
4	27485	Lock Washer, 5/16 SS	1
5	27487	Flat Washer, 5/16 SS	1
6	27478	Shaft Seal	1
	41740	Optional Heavy-Duty Seal	1
7	27481	Impeller	1

Ref.	Part No.	Description	Qty
8	91-0017	Square Key, 3/16 x 1/2 SS	1
9	27476	Frame	1
10	27477	Shaft, SS	1
11	27483	Lock Ring	1
12	27479	Bearing	1
13	27480	Lock Ring	2
14	27490	Repair Kit	1
			AR

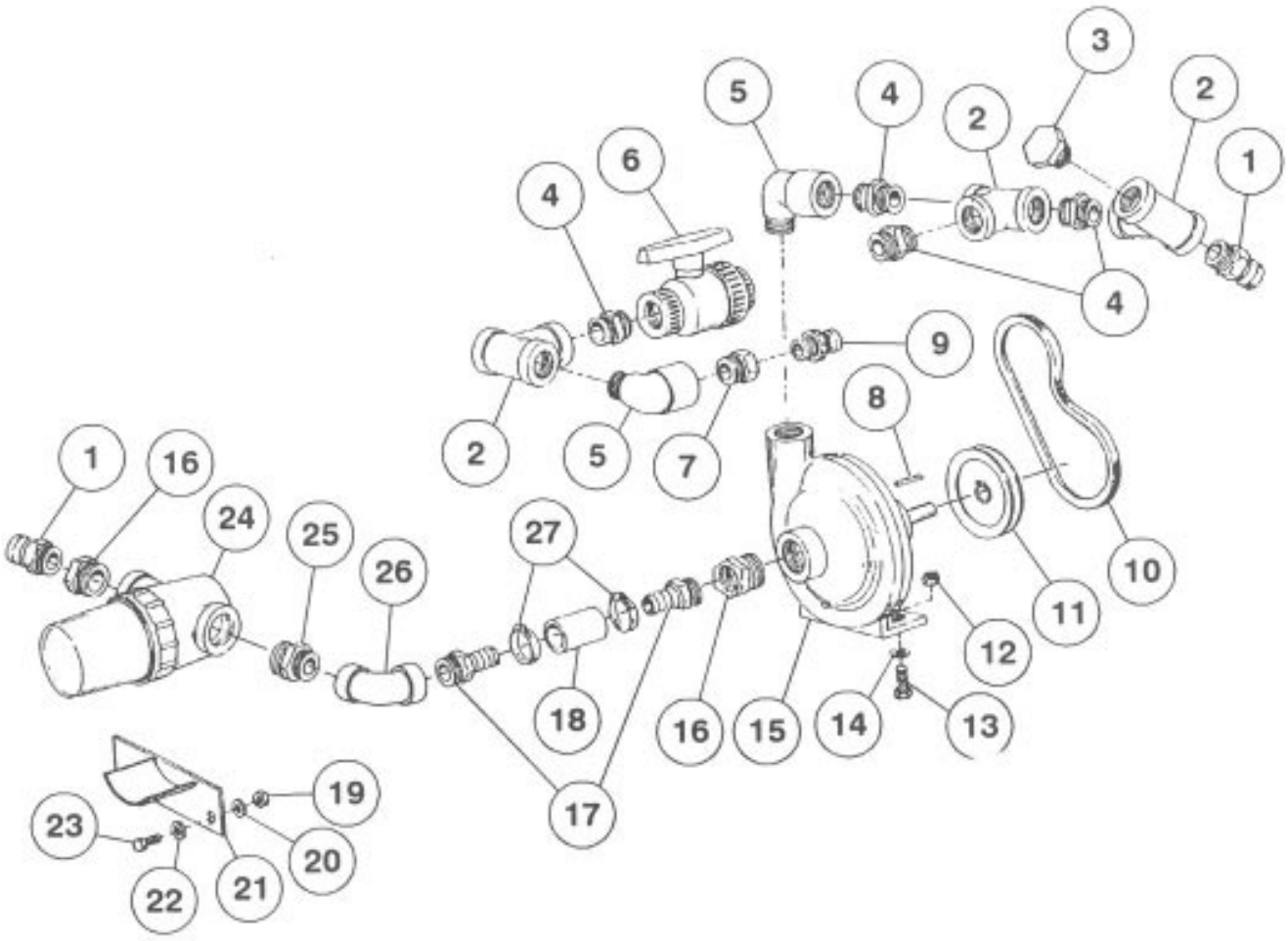

1969

PUMP SYSTEM

Ref.	Part No.	Description	Qty
1	40479	Male Quick Barb, 1" MPT	2
	41318	Dust Cap	2
2	41305	Tee, 1" NPT	3
3	41315	Hex Plug, 1" MPT	2
4	41304	Close Nipple, 1" NPT	4
5	41307	90° St. Elbow, 1" NPT	2
6	40020	Ball valve, 1" NPT	1
7	41306	Red. Bushing, 1" MPT X 1/2" FPT	1
8	92-0049	Square Key, 3/16 x 1-1/4"	1
9	40486	Male Quick Adapter, 1/2" MPT	1
	41317	Dust Cap	1
10	41711	Drive Belt	1
11	40198	Pump Pulley	1
12	3217-6	Hex Nut, 3/8" NC	2
13	323-7	HHCS 3/8" NC x 1-1/4"	2
14	3253-11	Lock Washer, 3/8"	2

Ref.	Part No.	Description	Qty
15	97802	Centrifugal Pump	1
16	92-0052	Red. Bushing, 1-1/4" MPT X 1" FPT	2
17	92-0012	Hose Barb, 1" MPT x 1" HB	2
18	92-0240	Suction Jumper Hose, 1" I.D. x 3"	1
19	3217-6	Hex Nut, 5/16" NC	2
20	3253-4	Lock Washer, 5/16"	2
21	92-0233	Strainer Bracket ASM	1
22	3256-23	Flat Washer, 5/16" SAE	2
23	322-5	Cap Screw, 5/16 x 1"	2
24	42701	Suction Strainer	1
	93-0687	Strainer Bowl (f/w 42701)	1
	42702	Strainer Screen (f/w 42701)	1
	42703	Strainer Gasket (f/w 42701)	1
25	42992	Red. Nipple, 1-1/4" MPT x 1" MPT	1
26	93-6267	90° Elbow, 1" NPT	1
27	21146	Hose Clamp	2

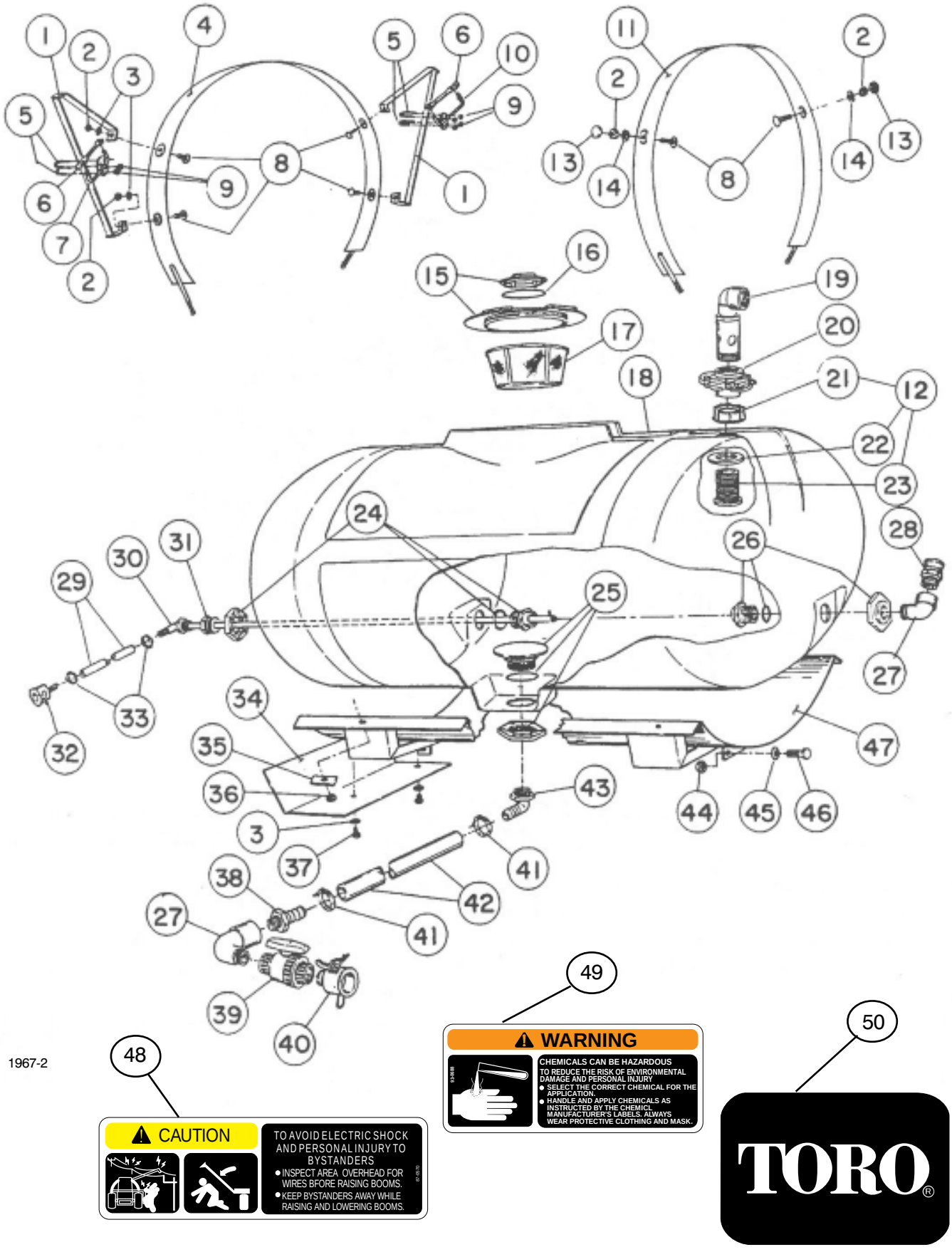
1
2
3
4
5
6
7
8
9
10
11
12
13
14
15
16
17
18
19
20
21
22
23
24
25
26
27
28
29
30
31
32
33
34
35
36
37
38
39
40
41
42
43
44
45
46
47
48
49
50
CAUTION
TO AVOID ELECTRIC SHOCK AND PERSONAL INJURY TO BYSTANDERS
• INSPECT AREA OVERHEAD FOR WIRES BFORE RAISING BOOMS.
• KEEP BYSTANDERS AWAY WHILE RAISING AND LOWERING BOOMS.
WARNING
CHEMICALS CAN BE HAZARDOUS
TO REDUCE THE RISK OF ENVIRONMENTAL DAMAGE AND PERSONAL INJURY
• SELECT THE CORRECT CHEMICAL FOR THE APPLICATION.
• HANDLE AND APPLY CHEMICALS AS INSTRUCTED BY THE CHEMICL MANUFACTURER'S LABELS. ALWAYS WEAR PROTECTIVE CLOTHING AND MASK.
TORO

1967-2

TANK

Ref.	Part No.	Description	Qty
1	42983	Hold-In Brace ASM	2
2	3217-6	Hex Nut, 5/16 NC	6
3	3256-23	Flat Washer, 5/16	6
4	42880	Mounting Band (Front)	2
5	92-0010	U-Bolt, 1/4 NC	4
6	42198	Rubber Hold Down Strap	2
7	42259	Boom Hold-In ASM - LH	1
8	3230-1	Carriage Bolt, 5/16 NC x 3/4	6
9	32153-4	Lock Nut, 1/4 NC	8
10	42316	Boom Hold-In ASM, RH	1
11	43013	Mounting Band (Rear)	2
12	43065	Tank Fitting ASM, 2"	1
13	42452	Protective Cap	2
14	3253-4	Lock Washer, 5/16	2
15	42322	Tank Lid (f/w Tank ASM)	1
	92-3765	Vent Cap	1
16	42959	Breather Gasket (f/w Tank ASM)	1
17	42323	Filler Basker - 16" (f/w Tank ASM)	1
18	42879	Tank ASM - 160 Gals.	1
19	43069	Stand Up ASM	1
20	43064	Knife Valve	1
21	43068	Fly Nut, 2" NPT	1
22	43067	Sealing Washer	1
23	43066	Bulk Head, 2" NPT	1
24	41801	Tank Fitting, 3/4" NPT (f/w Tank ASM)	1
25	41798	Tank Fitting, 1-1/4" NPT (f/w Tank ASM)	1

Ref.	Part No.	Description	Qty
26	41800	Tank Fitting, 1" NPT - f/w Tank ASM	1
27	41307	90° St Elbow, 1" NPT	2
28	40479	Male Quick Adapter, 1" MPT	1
	41318	Dust Cap	1
29	92-0245	Agitator Hose, 1/2 I.D. x 45"	1
30	42981	Agitator Tube ASM	1
	42842	Elbow - Agitator Tube (Barbed)	1
31	41969	Reducer Bushing, 3/4" MPT x 1/2" FPT	1
32	40487	Female Quick Coupler, 1/2" HB	1
33	96609	Hose Clamp	2
34	92-3525*	Heat Shield	1
35	43014	Backing Strap	4
36	3217-7	Hex Nut, 3/8 NC	4
37	322-3	HHCS, 5/16 NC x 3/4"	2
38	92-0012	Hose Barb, 1" MPT x 1" HB	1
39	40020	Ball Valve, 1" MPT	1
40	92-0238	Female Quick Coupler, 1" MPT	1
41	21146	Hose Clamp	2
42	92-0241	Suction Hose, 1" I.D. x 53"	1
43	42057	90° Elbow, 1-1/4 MPT x 1" HB	1
44	3217-9	Hex Nut, 1/2 HC	2
45	3253-7	Lock Washer, 1/2 Med	2
46	425-5	HHCS, 1/2 NC x 1-1/4	2
47	42878	Tank Saddle ASM	1
48	87-0570	Decal - "Electric Shock"	2
49	93-0688	Decal - "CAUTION - Chemicals"	1
50	62-5550	Decal - "TORO"	2

* These parts will not be used in Skid Sprayer set-up.

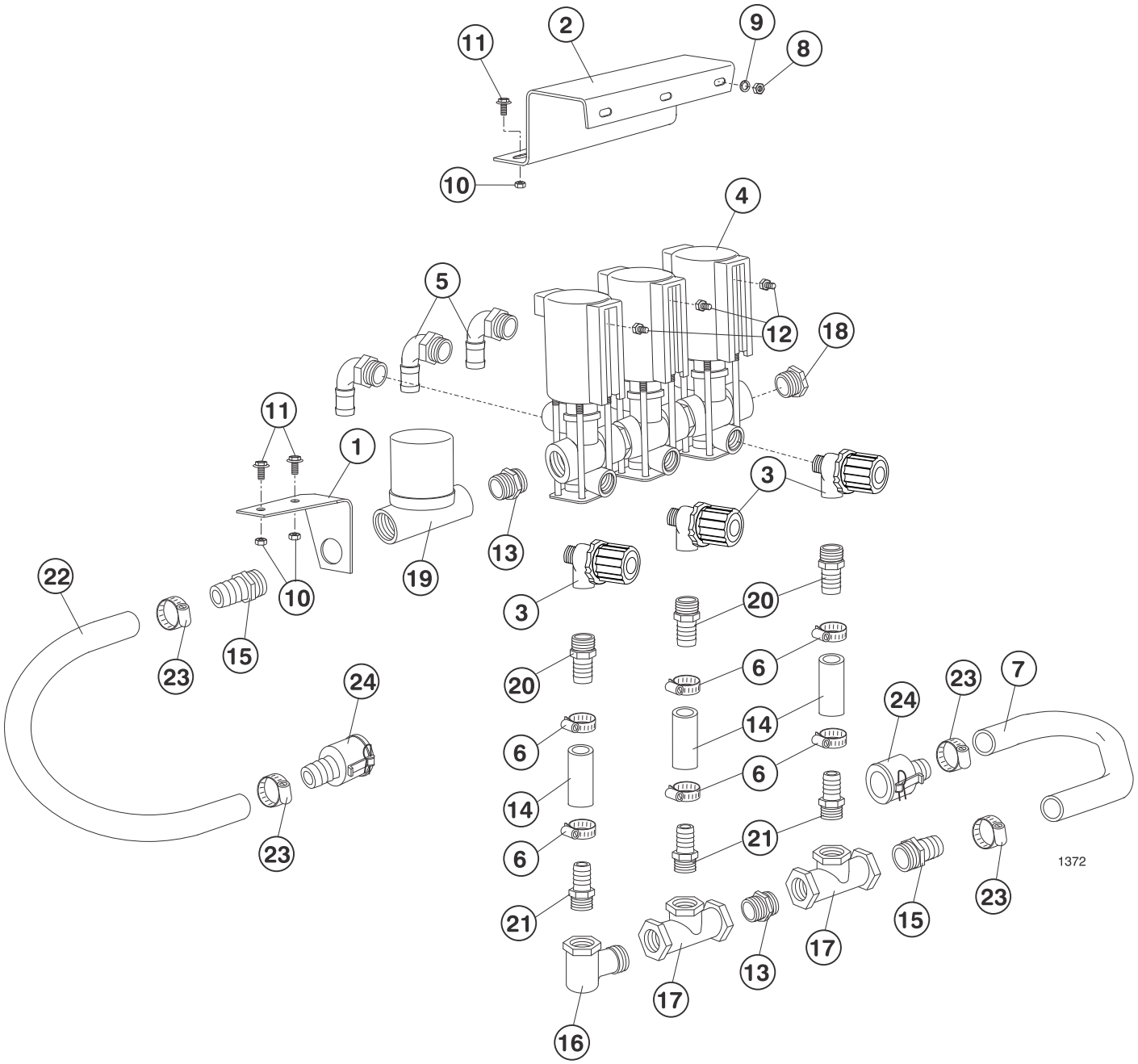

CONTROL VALVE

Ref	Part No.	Description	Qty
1	99-0529	Control Valve Bracket	1
2	99-0528	Solenoid Valve Bracket	1
3	42872	Throttling Valve	3
4	99-0530	Bypass Solenoid Valve Assembly	1
	99-0536	Single Solenoid	AR
5	92-8557	Hose Barb, 90° 1/2" x 3/4" HB	3
6	92-0045	Hose Clamp	6
7	92-3707	Hose Bypass, 1" x 100"	1
8	43-2830	Hex Nut, M6-1	3
9	48-8020	Lock Washer	3
10	32128-20	Hex Flange Nut	4
11	3234-5	HHCS	4

Ref	Part No.	Description	Qty
12	48-7620	HHCS, M6 x 16mm	3
13	41294	Close Nipple, 3/4"	2
14	42944	Connector Hose, 3/4" x 2-1/2"	3
15	41730	Hose Barb, 3/4" MPT x 1" H.B.	2
16	42940	St. Elbow, 3/4" NPT	1
17	42941	Tee, 3/4" NPT	2
18	41310	Reducer Bushing, 3/4" x 1/4"	1
19	42936	Control Valve	1
20	41313	Hose Barb, 1/2" MPT x 3/4" H.B.	3
21	41257	Hose Barb, 3/4" MPT x 3/4" H.B.	3
22	92-0244	Supply Hose, 1" x 80"	1
23	21146	Hose Clamp	4
24	40480	Quick Adapter	2

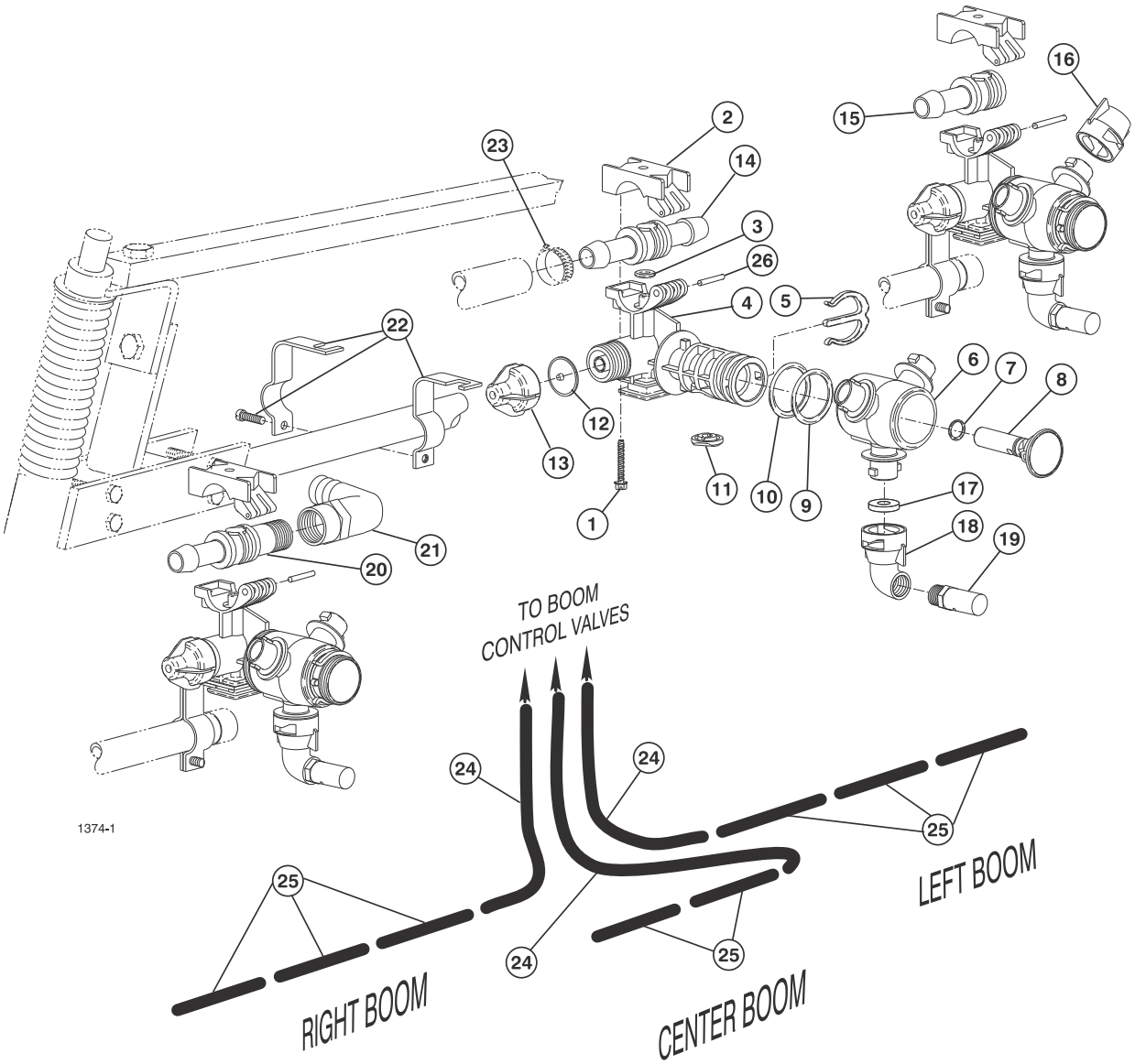

TURRET BODIES & BOOM HOSES

Ref	Part No.	Description	Qty
*	95-9183	Turret Body - Double Barb (Incl. Ref. #'s 1-14)	7
*	95-9181	Turret Body - Single Barb (Incl. Ref. #'s 1-13 & 15)	3
*	95-9184	Turret Body - Barb x 1/2 NPT (Incl. Ref. #'s 1-13 & 20)	1
1	99-0811	Screw	1
2	99-0812	Upper Clamp	1
†3	95-9191	O-Ring	1
4	95-9192	Split-Eyelet Body	1
5	95-9197	E-Clip	1
6	95-9196	Turret	1
7†	95-9198	O-Ring	1
8	95-9200	Plug	1
9†	95-9199	O-Ring	1
10†	99-0815	O-Ring Duat Seal	1
11†	99-0813	Seal	1
12†	41003	Diaphragm	1
13	95-9193	End Cap Assembly	1
14	95-9202	Double Hose Barb	1

Ref	Part No.	Description	Qty
15	95-9201	Single Hose Barb	1
16	95-9187	Nozzle Dust Cap (Incl. Ref. # 17)	22
17	40998	Seat Gasket	33
18	95-9186	Nozzle Cap, 90° (Incl. Ref. # 17)	11
19	95-9188	TTJ10 Turbo TurfJet (Std.)	11
	95-9221	TTJ2 Turbo TurfJet (Optional)	11
	95-9222	TTJ4 Turbo TurfJet (Optional)	11
	95-9223	TTJ5 Turbo TurfJet (Optional)	11
	95-9224	TTJ6 Turbo TurfJet (Optional)	11
	95-9225	TTJ8 Turbo TurfJet (Optional)	11
	95-9226	TTJ15 Turbo TurfJet (Optional)	11
20	95-9203	Hose Barb x 1/2" NPT	1
21	95-9314	90° Elbow, 1/2" FPT x 3/4" H.B.	1
22	95-9185	Turret Body Clamp	11
23	92-0045	Hose Clamp, 3/4" Hose	22
24	41340	Boom Hose, 3/4" x 50"	3
25	40506	Jumper Hose, 3/4 x 19"	8
26	99-0814	Pivot Pin, 303 S.S.	1

† Denotes parts in Seal Kit # 99-0816

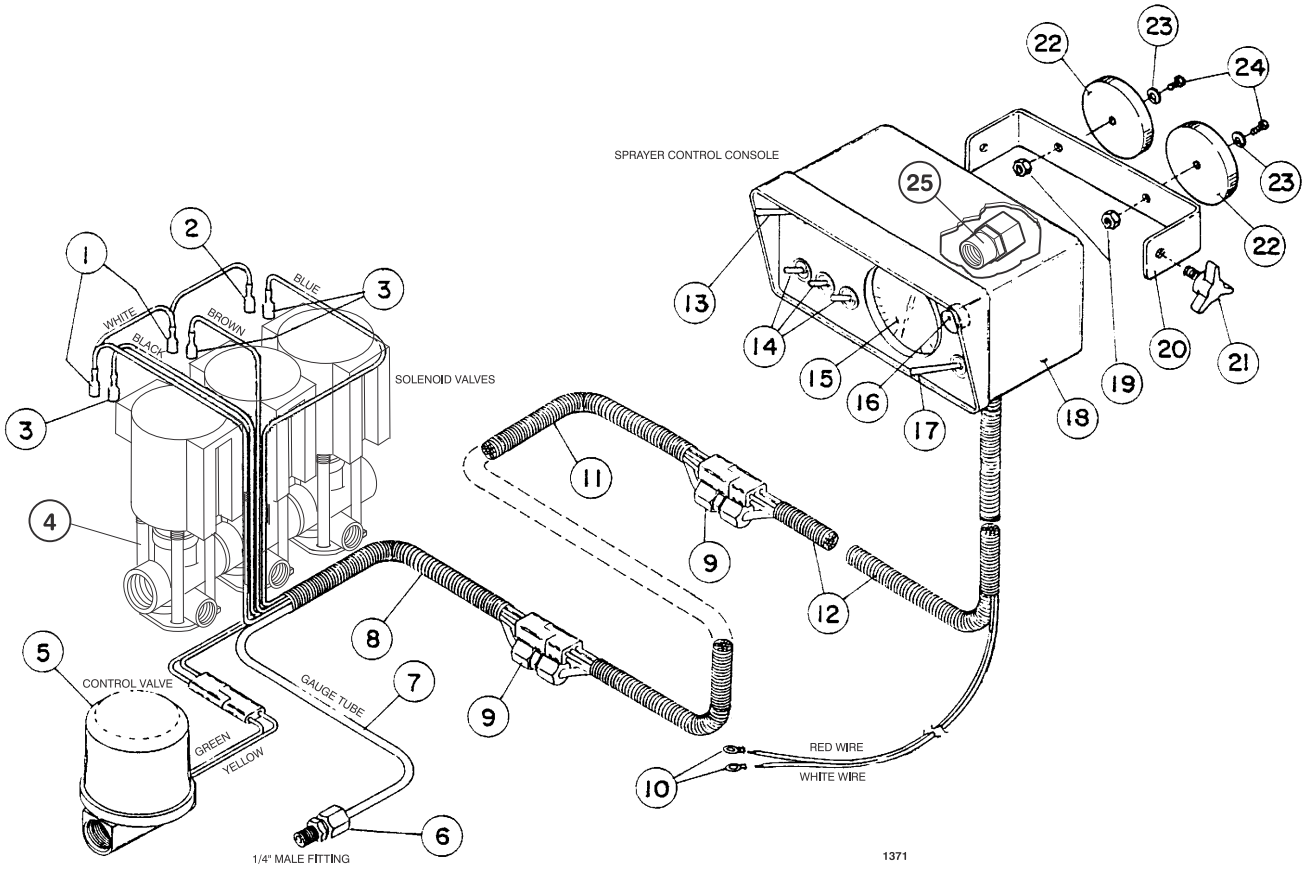

SPRAYER CONTROL

Ref.	Part No.	Description	Qty
1	42933	12-10 AWG Female Terminal	2
2	42934	16-14 AWG Female Terminal	1
3	42932	Insulated Female Terminal	3
4	99-0530	Solenoid Valve ASM	1
	99-0536	Single Solenoid	A/R
	99-0546	Seal Kit	A/R
5	42936	Control Valve	1
6	42931	Male Fitting	1
7	42930	Tubing	1
8	42935	72" Cable ASM (Solnd. Hook-Up)	1
9	42929	Union Fitting	2
10	42313	Ring Terminal, 3/8	2
11	92-0257	144" Extension Cable ASM	1
12	42928	96" Cable ASM (Enclos. Hook-Up)	1

Ref.	Part No.	Description	Qty
13	42923	Master Switch	1
14	42921	Boom Switch	3
15	42924	Pressure Gauge (PS)	1
16	42925	Fuse Holder	1
	42926	15 - AMP Fuse	1
17	42927	Pressure Adjust Switch	1
18	93-1035	Console	1
19	92-1036	Hex Nut, 1/4 NC	2
20	92-0367	Mounting Bracket	1
21	93-1037	Knob	2
22	93-1038	Magnet	2
23	93-1039	Lock Washer, 1/4	2
24	99-0545	HHCS, 1/4 NC x 5/8"	2
25	93-1042	Female Gauge Fitting	1

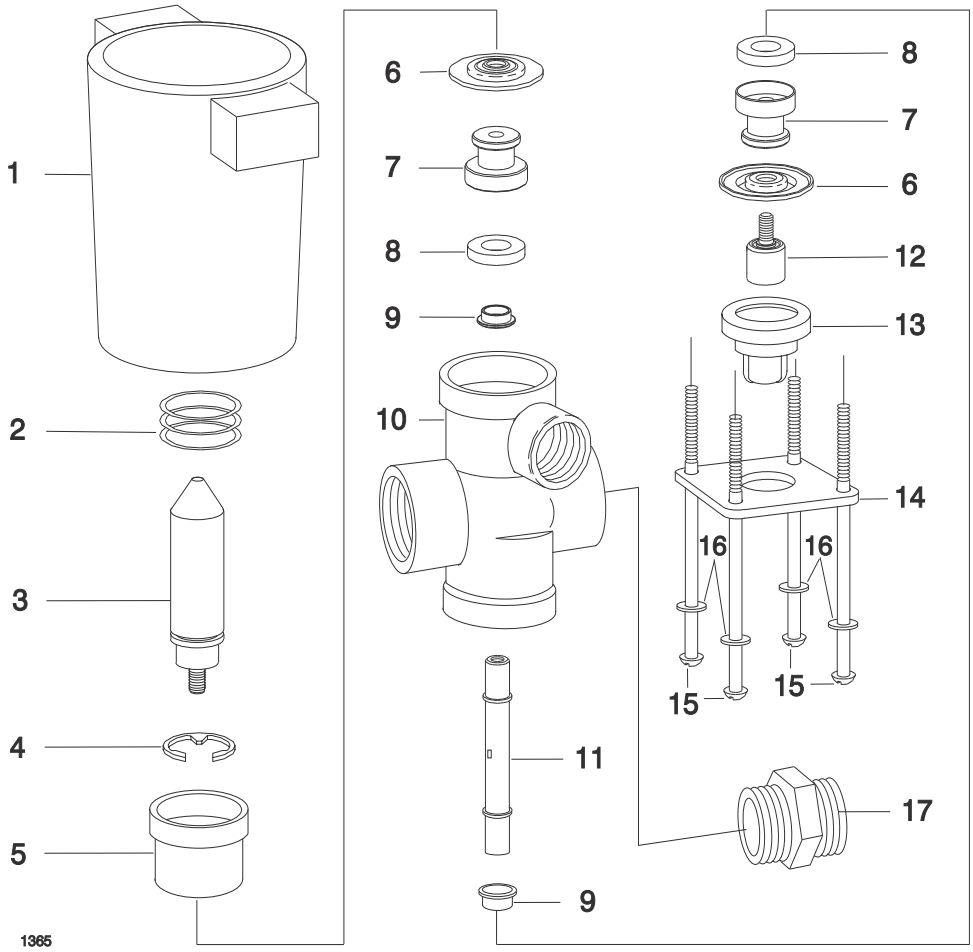

SOLENOID VALVE (99-0536)

Ref.	Part No.	Description	Qty
1	95-9317	Coil ASM - Nylon Encapsulated	1
2	†	Spring - SS	1
3	95-9318	Armature - SS	1
4	95-9319	Retaining Ring - Steel, Plated	1
5	93-1031	Upper Diaphragm Housing (blk)	1
6	†	Diaphragm - Viton	2
7	93-1034	Seat Washer Retainer - SS	2
8	†	Seat Washer - Viton	2

Ref.	Part No.	Description	Qty
9	42136	Spacer - SS	2
10	93-1035	Body - Polypropylene (black)	1
11	92-1036	Stem - SS	1
12	92-0367	Lower Diaphragm Piston - SS	1
13	93-1037	Lower Diaphragm Housing (blk)	1
14	93-1038	Bottom Plate, Steel (blk)	1
15	93-1039	Screw - SS	4
16	99-0545	Lock Washer - Type 18-B, SS	4

† Indicates parts included in Viton Seal Kit.
Order Part No. 99-0546.



Helping you put quality into play.™

WARNING

The engine exhaust from this product contains chemicals known to the State of California to cause cancer, birth defects, or other reproductive harm.