Form No. 3471-575 Rev A

TORO®

Count on it.

Parts Catalog

Workman® UTX

2 Passenger Utility Vehicle

Model No. 08100TC—Serial No. 418000000 and Up

Register at www.Toro.com.
Original Instructions (EN)

CE

3471-575 A

Ordering Replacement Parts

To order replacement parts, please supply the part number, the quantity, and the description of each part desired.

Understanding Reference Numbers

Each identified part in an illustration has a reference number. The reference number for a part also appears in the parts list, along with other information about the part.

This catalog uses two special reference number formats, one to indicate parts in a service assembly and another to indicate the quantity of a given part in an illustration.

Service Assembly Reference Numbers

Parts in service assemblies have reference numbers in the form a:b. The a represents the reference number of the entire service assembly and the b represents a sequential number unique to each part within the service assembly.

For example, a wheel assembly might be identified by reference number 6, the tire by 6:1, the valve by 6:2, and the wheel by 6:3. When you order the assembly identified by reference number 6, you receive all parts identified by reference numbers 6:1,6:2, and 6:3. However, you may also order any part individually. Reference numbers of this type appear in illustration and in parts lists.

Reference Numbers Indicating Quantity

In an illustration, if a reference number indicates more than one part, the reference number has the form nX y. The n represents the quantity of the part, the X is the multiplication symbol, and the y represents the reference number.

For example, in an illustration, the reference number 2X 37 means that two of the parts identified by reference number 37 are indicated.

Contents

Frame and ROPS Assembly . . . 4
Front Suspension Assembly . . . 6
Front Control Arm Assembly No. 145-7771 . . . 7
Rear Suspension and Subframe Assembly . . . 8
Pedals and Controls Assembly . . . 10
Steering Assembly . . . 11
Brake Assembly . . . 12
Master Cylinder Assembly No. 104-6782 . . . 13
Brake Caliper Assembly No. 127-7424 . . . 14
Hood and Front Fender Assembly . . . 15
Dash Assembly . . . 16
Seat Base Assembly . . . 17
Cargo Bed Assembly . . . 18
Cargo Bed Kit Assembly . . . 19
Electrical Assembly . . . 20
Battery Assembly . . . 22
Engine Drivetrain and Exhaust Assembly . . . 23
Engine, Transaxle and Clutch Assembly . . . 24
Transaxle Assembly No. 140-2611 . . . 25
Secondary Clutch Assembly No. 147-8173 . . . 26
Primary Clutch Assembly No. 147-8172 . . . 27
Front Differential and Driveshaft Assembly . . . 28
Front Differentail Assembly No. 140-4752 . . . 29
Intermediate Driveshaft Assembly No. 140-4771 . . . 31
Driveshaft Assembly No. 140-2647 . . . 32
Cooling System Assembly . . . 33
Radiator Assembly No. 161-5206 . . . 34
Fuel System Assembly . . . 35
Air Cleaner Assembly . . . 36
Air Cleaner Assembly No. 106-5277 . . . 38
Hose Intake Assembly No. 145-2118 . . . 40
Cylinder Block Assembly . . . 41
Crankshaft and Piston Assembly . . . 42
Camshaft and Rocker Arm Assembly . . . 43
Cylinder Head Assembly . . . 44
Timing Cover Assembly . . . 45
Intake Manifold Assembly . . . 46
Exhaust Manifold Assembly . . . 47
Oil Pan Assembly . . . 48
Oil Pump Assembly . . . 49
Water Pump Assembly . . . 50
Starter Assembly . . . 51
Alternator Assembly . . . 52
Rear Plate Assembly . . . 53
Ignition Assembly . . . 54
Throttle Body Assembly . . . 55
Coolant Plug Assembly . . . 56
Coolant Inlet Assembly . . . 57
Electrical Assembly . . . 58
Flywheel Assembly . . . 59
Attachments and Accessories . . . 60

© 2026—The Toro® Company
8111 Lyndale Avenue South
Bloomington, MN 55420

Contact us at www.Toro.com.
Printed in the USA.
All Rights Reserved

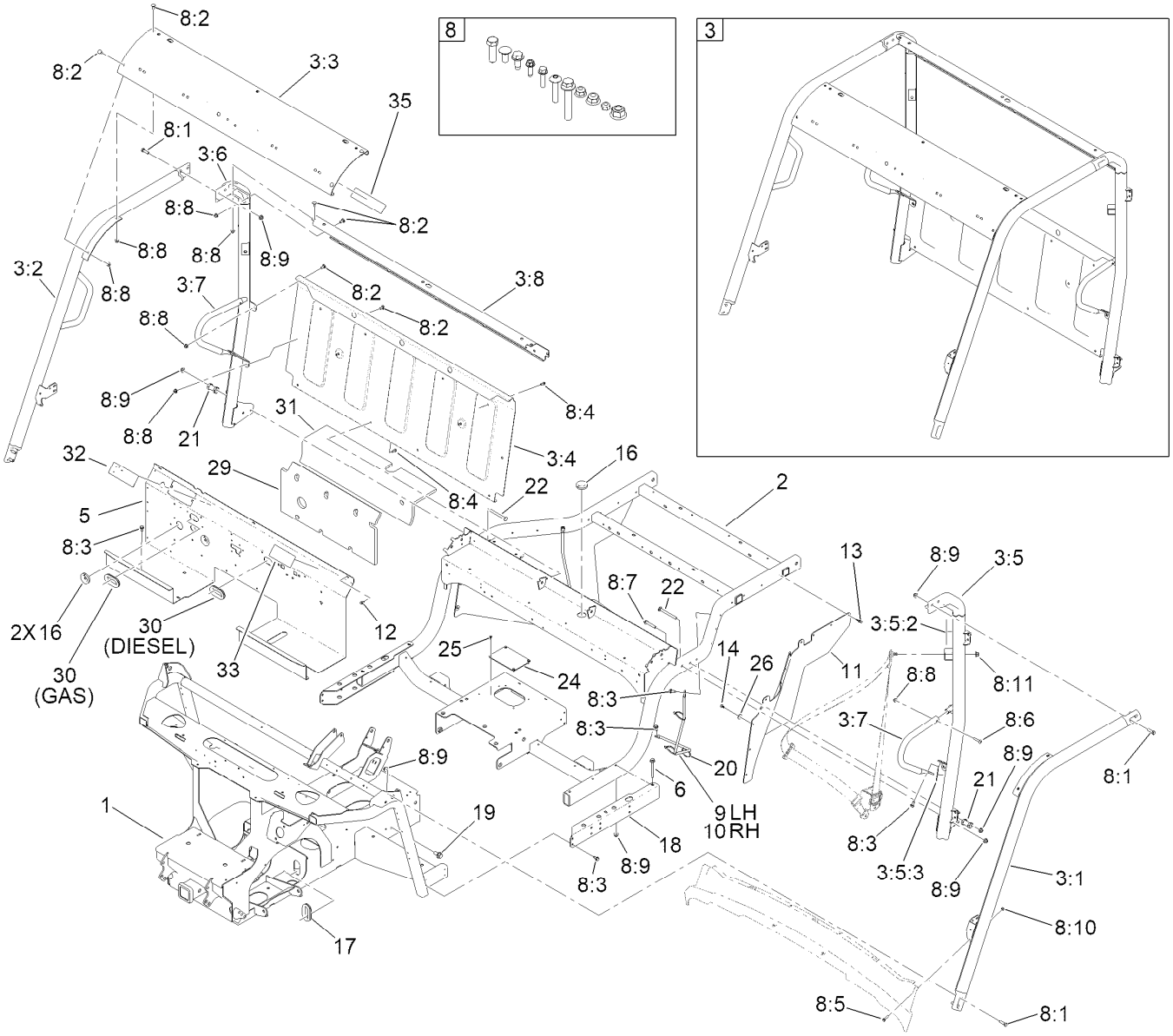

Frame and ROPS Assembly

Ref.	Part Number	Qty.	Description
1	147-8107	1	Front Frame ASM (2 Passenger)
2	161-5386	1	Rear Frame ASM
3		1	Standard ROPS Kit ●
3:1	137-2737	1	Front ROPS ASM-LH
3:2	137-2738	1	Front ROPS ASM-RH
3:3	140-2583	1	ROPS Front Crosslink ASM
3:4	138-9438	1	Panel-Back, Seat
3:5	140-2597	1	LH ROPS Rear Tube ASM
3:5:2	145-2215	1	Decal-ROPS Safety, Utx
3:5:3	144-2267	1	Decal-Compliance, ROPS
3:6	137-2726	1	ROPS Rear Tube ASM-RH
3:7	138-5787	2	Tube-Restraint, Shoulder
3:8	137-6892	1	Crosslink-Rear, ROPS
5	163-4936-03	1	Panel-Underseat
6	116-4701	4	Screw-HHF
8	144-2286	1	Standard ROPS Hardware Kit

Ref.	Part Number	Qty.	Description
8:1	144-2258	8	Screw-HH
8:2	144-2265	12	Bolt-CARR
8:3	32144-70	4	Screw-HWHTF
8:4	49-2040	10	Screw-HWHTF
8:5	32144-86	2	Screw-HWHTF
8:6	126-7439	2	Screw-Torx
8:7	144-2409	2	Screw-HHF
8:8	119-4041	14	Nut-HF
8:9	119-4042	10	Nut-HF, NI
8:10	3296-73	2	Nut-Lock, NI
8:11	144-2269	2	Nut-Nylk,HF
9	139-3432	1	Support-Skirt, LH Side
10	139-3433	1	Support-Skirt, RH Side
11	147-2825	2	Skirt-Side
12	32144-4	3	Screw-HWH
13	125-9622	16	Rivet-Blind
14	138-5775	6	Screw-Delta Point
16	163-4938	3	Grommet

● Not serviced separately

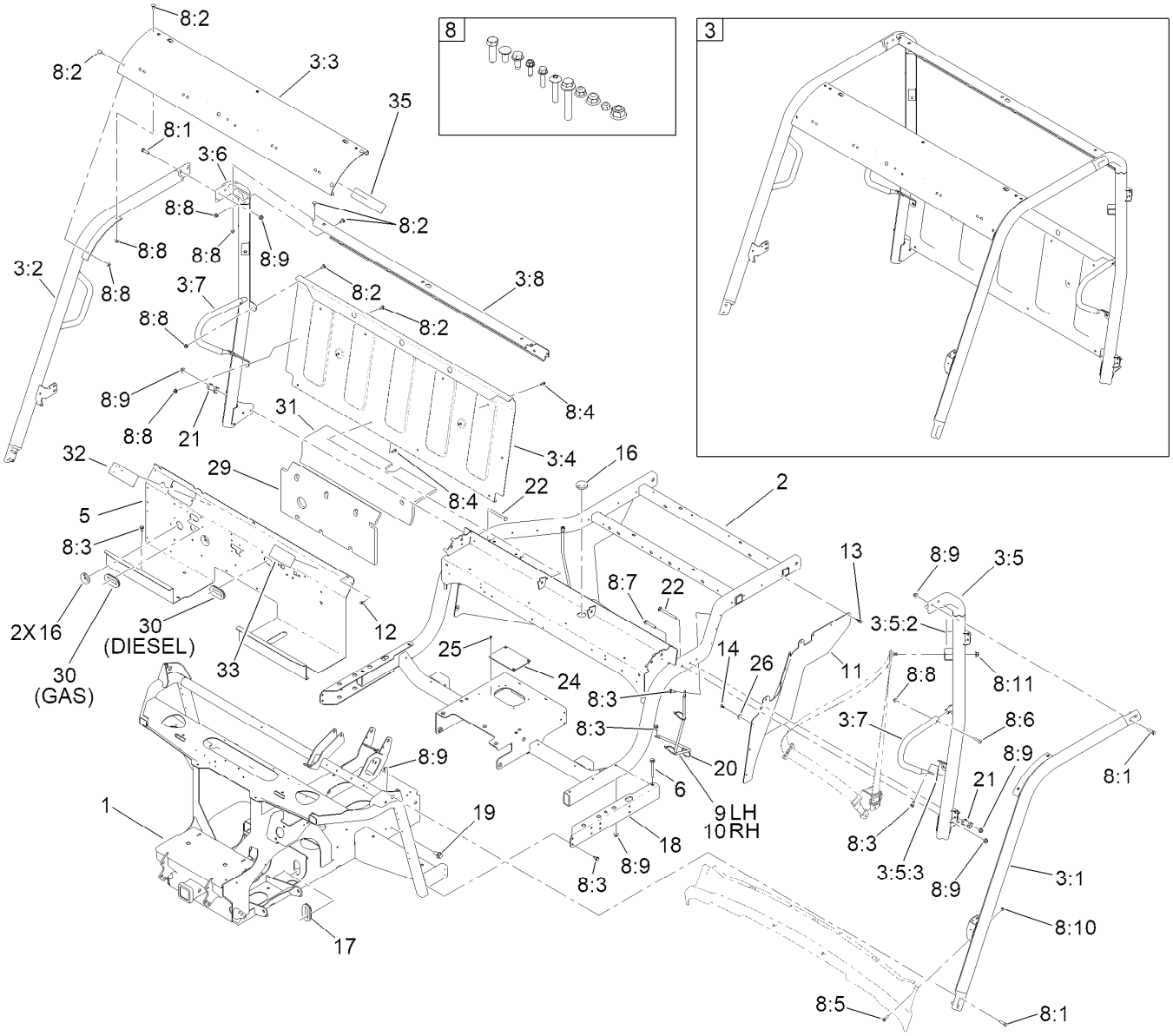

Frame and ROPS Assembly (continued)

Ref.	Part Number	Qty.	Description
17	240-12	1	Grommet-Rubber
18	161-5385-0P	2	Rail-Frame
19	3234-6	7	Screw-HHF
20	3290-378	6	Tie-Cable
21	140-4775	2	Pin-Latch
22	3231-37	2	Screw-CARR
24	144-2245	1	Cover-Access
25	139-1692	4	Screw-PTH

Ref.	Part Number	Qty.	Description
26	3256-67	6	Washer
29	145-7990	1	Foam-Barrier, Heat
30	110-5090	1	Grommet
31	145-7998	1	Foam-Barrier, Heat
32	161-5445	1	Decal-Fuse, Vehicle
33	161-5435	1	Decal- Maintenance, Gas
35	161-5426	1	Decal-Safety, Vehicle

● Not serviced separately

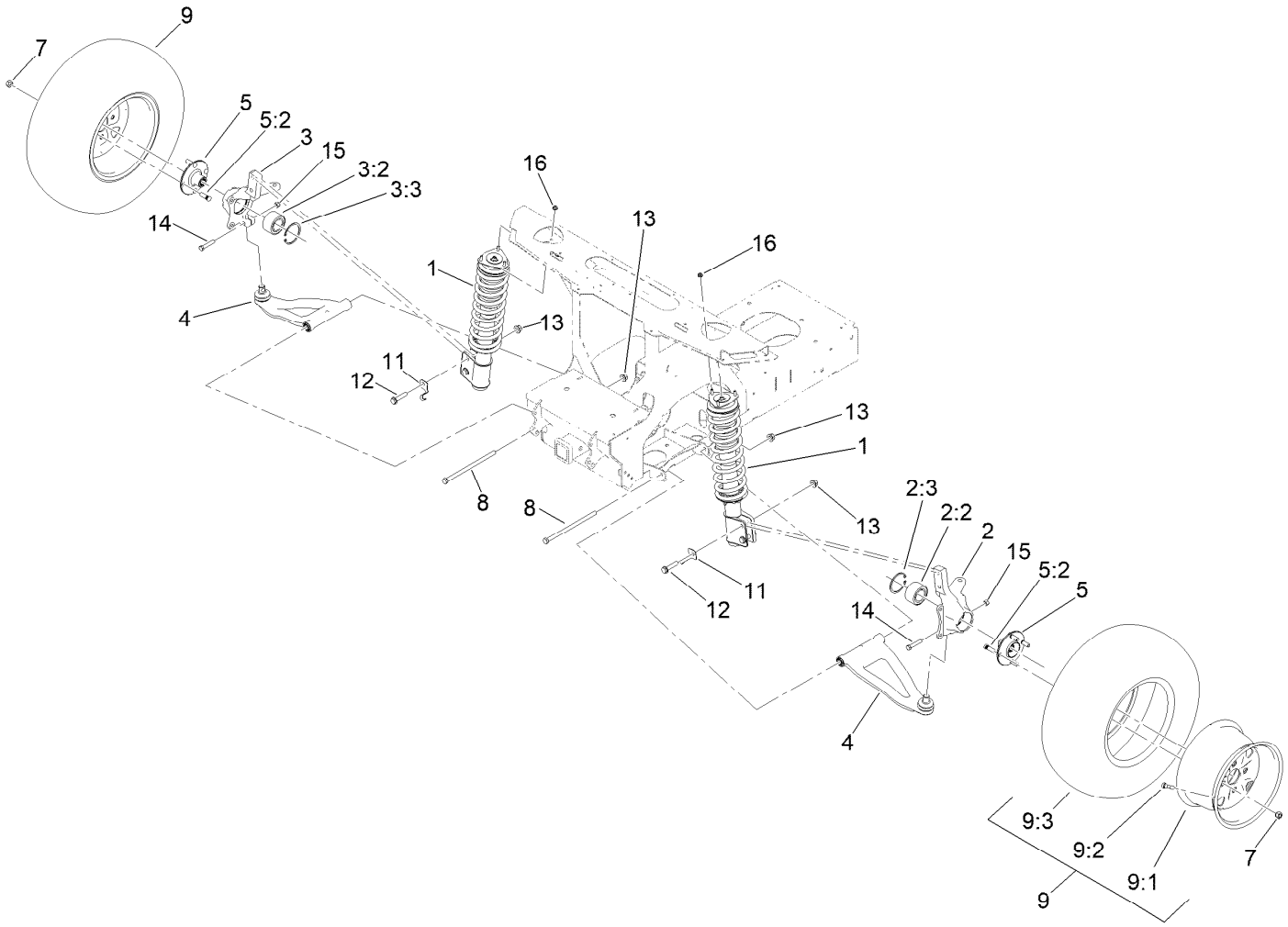

Front Suspension Assembly

Ref.	Part Number	Qty.	Description
1	147-2706	2	Strut ASM
2	138-9319	1	Knuckle ASM-Front, LH
2:2	133-7272	1	Bearing-Ball
2:3	144-2207	1	Ring-Retaining
3	138-9320	1	Knuckle ASM-Front, RH
3:2	133-7272	1	Bearing-Ball
3:3	144-2207	1	Ring-Retaining
4	145-7771	2	Control Arm ASM-Front
5	137-6754	2	Hub ASM
5:2	137-6760	4	Stud-Wheel
7	139-2564	8	Nut-Lug

Ref.	Part Number	Qty.	Description
8	325-39	2	Screw-HH
9	136-9419	2	Tire/Wheel ASM
9:1	136-9418	1	Wheel-12X7-12
9:2	232-27	1	Stem-Valve
9:3	137-2689	1	Tire
11	137-6766	2	Bracket-Hose, Brake
12	3234-46	4	Screw-HHF
13	139-1689	6	Nut-HF
14	115-2398	2	Bolt-HH
15	3296-48	2	Nut-Hex
16	112-2844	6	Nut-HF

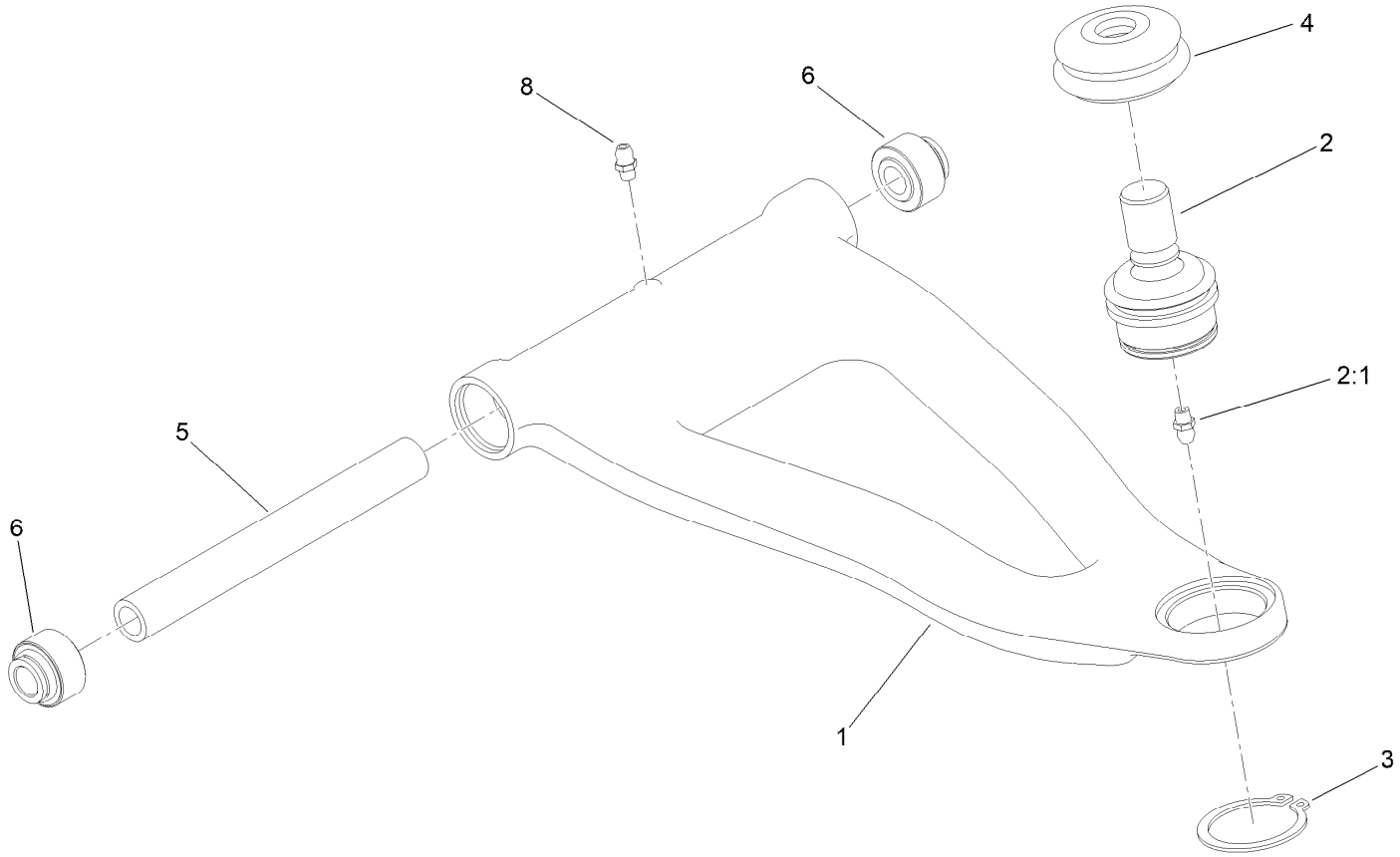

Front Control Arm Assembly No. 145-7771

Ref.	*Part Number*	*Qty.*	*Description*
1	145-7762	1	Control Arm-Front
2	115-2165	1	Ball Joint
2:1	302-5	1	Fitting-Grease
3	32151-104	1	Ring-Retaining, External
4	87-2420	1	Seal-Joint, Ball
5	145-7757	1	Spacer
6	145-7756	2	Bushing-Ball
8	302-60	1	Fitting-Grease

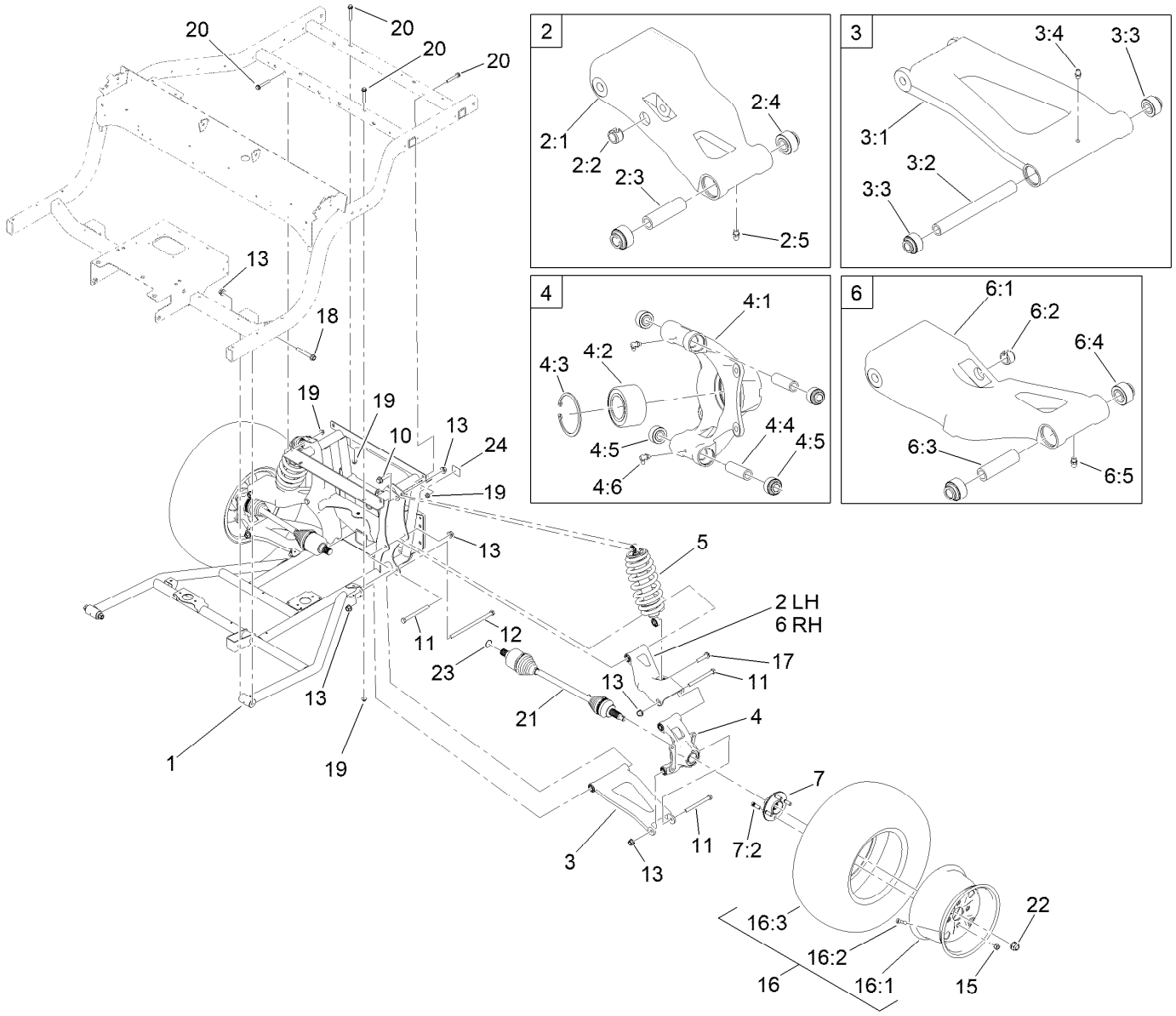

Rear Suspension and Subframe Assembly

Ref.	Part Number	Qty.	Description
1	147-8109	1	Engine Cradle ASM
2	145-7775	1	Control Arm ASM-Rear, LH Upper
2:1	145-7765	1	Control Arm-Rear Upr, LH
2:2	137-2659	1	Bushing-Tension
2:3	145-7770	1	Spacer
2:4	145-7756	2	Bushing-Ball
2:5	302-5	1	Fitting-Grease
3	145-7772	2	Control Arm ASM-Rear
3:1	145-7763	1	Control Arm-Rear, Lower
3:2	145-7757	1	Spacer
3:3	145-7756	2	Bushing-Ball
3:4	302-5	1	Fitting-Grease
4	145-7773	2	Knuckle ASM-Rear
4:1	145-7764	1	Knuckle-Rear
4:2	133-7272	1	Bearing-Ball
4:3	144-2207	1	Ring-Retaining
4:4	145-7770	2	Spacer
4:5	145-7756	4	Bushing-Ball
4:6	302-60	2	Fitting-Grease
5	145-7758	2	Shock/Spring ASM

Ref.	Part Number	Qty.	Description
6	145-7774	1	Control Arm ASM-Rear, RH Upper
6:1	145-7766	1	Control Arm-Rear Upr, RH
6:2	137-2659	1	Bushing-Tension
6:3	145-7770	1	Spacer
6:4	145-7756	2	Bushing-Ball
6:5	302-5	1	Fitting-Grease
7	137-6754	2	Hub ASM
7:2	137-6760	4	Stud-Wheel
10	3234-27	2	Screw-HHF
11	325-22	6	Screw-HH
12	325-39	2	Screw-HH
13	139-1689	12	Nut-HF
15	139-2564	8	Nut-Lug
16	136-9420	2	Tire/Wheel ASM
16:1	136-9418	1	Wheel-12X7-12
16:2	232-27	1	Stem-Valve
16:3	137-2690	1	Tire
17	3234-46	2	Screw-HHF
18	114-8419	2	Screw-HHF
19	119-4042	8	Nut-HF, NI

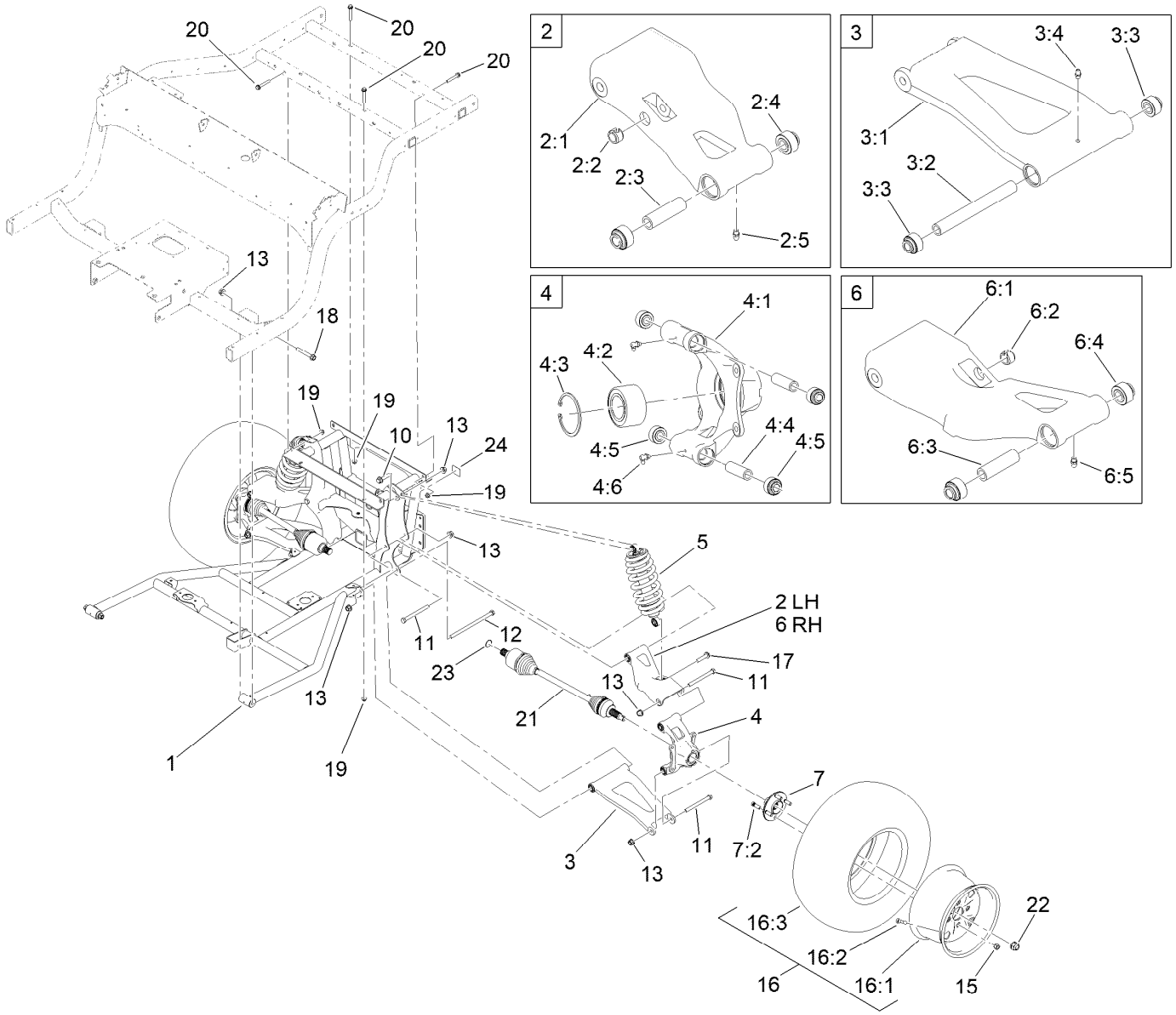

Rear Suspension and Subframe Assembly (continued)

Ref.	Part Number	Qty.	Description
20	3234-39	8	Screw-HHF
21	140-2608	2	Cv Axle ASM
22	115-2164	2	Nut-Spindle
23	119-1156	2	O-Ring
24	145-2205	1	Decal-Load, Towing

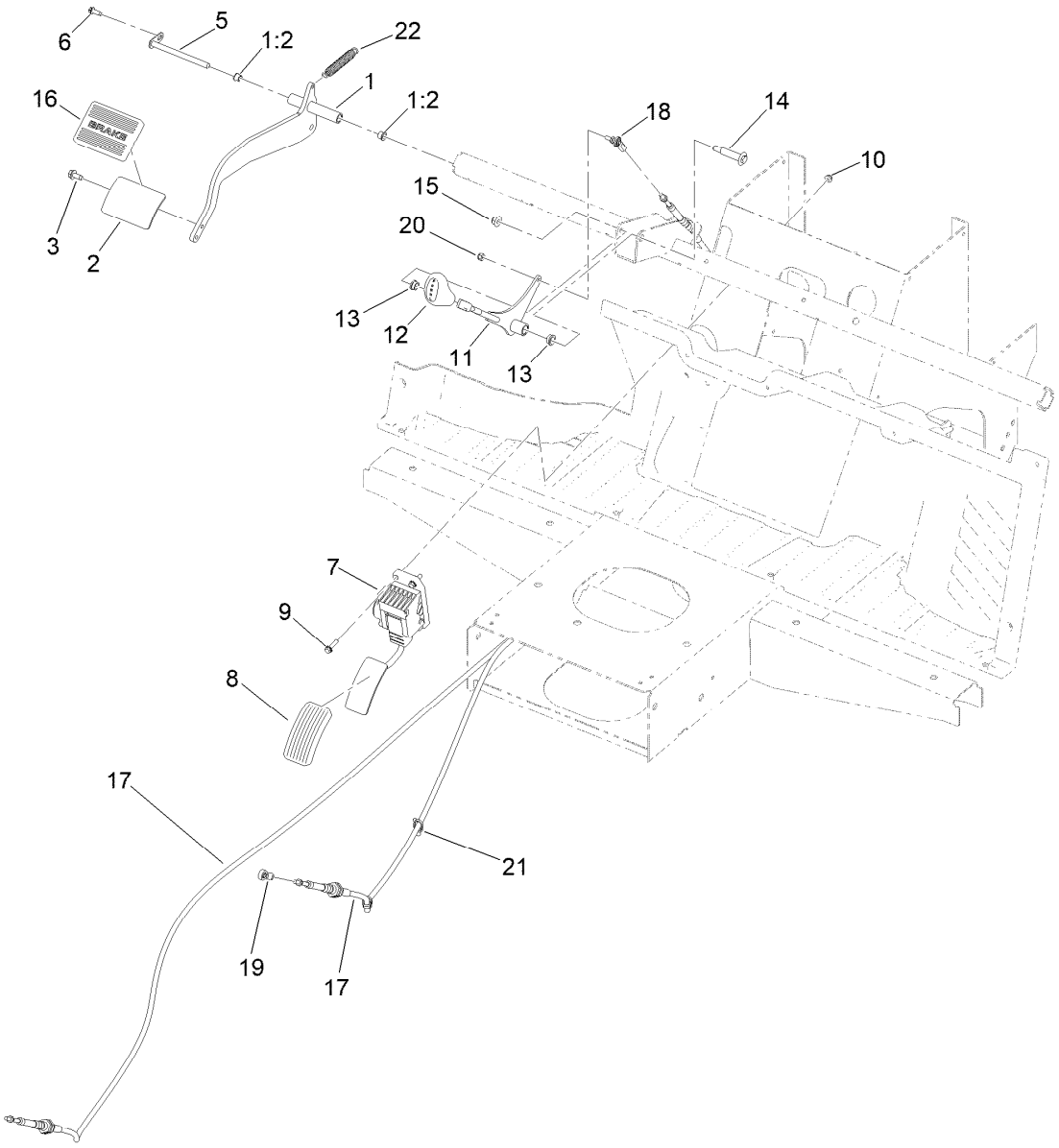

Pedals and Controls Assembly

Ref.	Part Number	Qty.	Description
1	163-4935	1	Brake Pedal ASM
1:2	256-116	2	Bushing-Flange
2	161-5256	1	Brake Pedal Pad ASM [black]
3	32144-70	2	Screw-HWHTF
5	136-9306	1	Pivot Shaft ASM
6	49-2040	1	Screw-HWHTF
7	144-2740	1	Pedal ASM-Accelerator
8	140-4572	1	Pedal Pad-Throttle
9	120-4654	3	Screw-HHF
10	104-7201	3	Nut-HF, NI
11	161-5472	1	Shifter ASM

Ref.	Part Number	Qty.	Description
12	139-4655	1	Knob-Shifter
13	256-156	2	Bushing-Flange
14	92-1057	1	Bolt-Shoulder
15	119-4042	1	Nut-HF, NI
16	161-5253	1	Footpad-Pedal
17	140-2649	1	Cable-Shift
18	110-2554	1	Rod End-Spherical
19	147-2705	1	Rod End-Spherical
20	3296-3	1	Nut-Lock
21	32180-030	2	Clip-Tie
22	132-6915	1	Spring-Extension

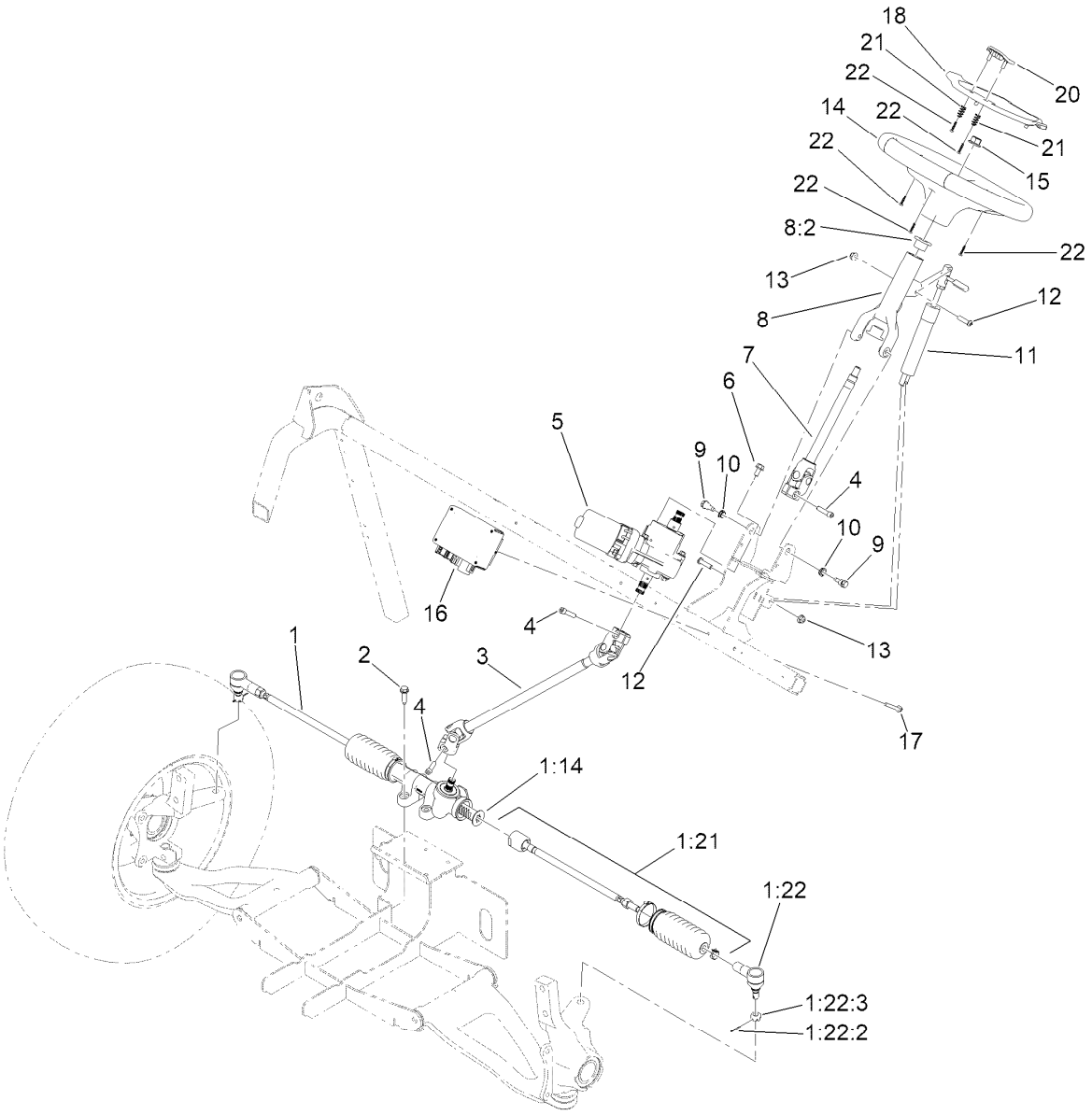

Steering Assembly

Ref.	Part Number	Qty.	Description
1	138-9322	1	Steering Rack ASM
1:14	138-0134	2	Lock-Rod, Tie
1:21	140-4823	1	Kit-Tie Rod ASM, Utx
1:22	140-4592	1	Kit-Rod End ASM
1:22:2	3272-42	1	Pin-Cotter
1:22:3	140-2493	1	Nut-Hex, Slotted
2	32144-49	4	Screw-HWHTF
3	138-3347	1	Steering Shaft ASM
4	145-7145	3	Screw-HSH,Lock
5	138-3348	1	Motor-Power Steering
6	33104-016	3	Screw-HHF
7	138-3344	1	Upper Steering Shaft ASM
8	139-4439	1	Tilt Steering Column ASM
8:2	133-0594	2	Bushing-Flange

Ref.	Part Number	Qty.	Description
9	115-1958	2	Bolt-Shoulder
10	256-156	2	Bushing-Flange
11	137-2827	1	Spring-Gas, Adjustable Stop
12	3290-511	2	Screw-HSBH
13	138-8401	2	Nut-HF
14	144-5570	1	Steering Wheel ASM
15	139-1689	1	Nut-HF
16	138-3349	1	Controller-Power Steering
17	33103-050	2	Screw-HHF
18	144-5567	1	Cover-Wheel, Steering
20	144-5566	1	Clip-Wheel, Steering
21	144-5537	2	Spring-Compression
22	94-4496	5	Screw-PPH

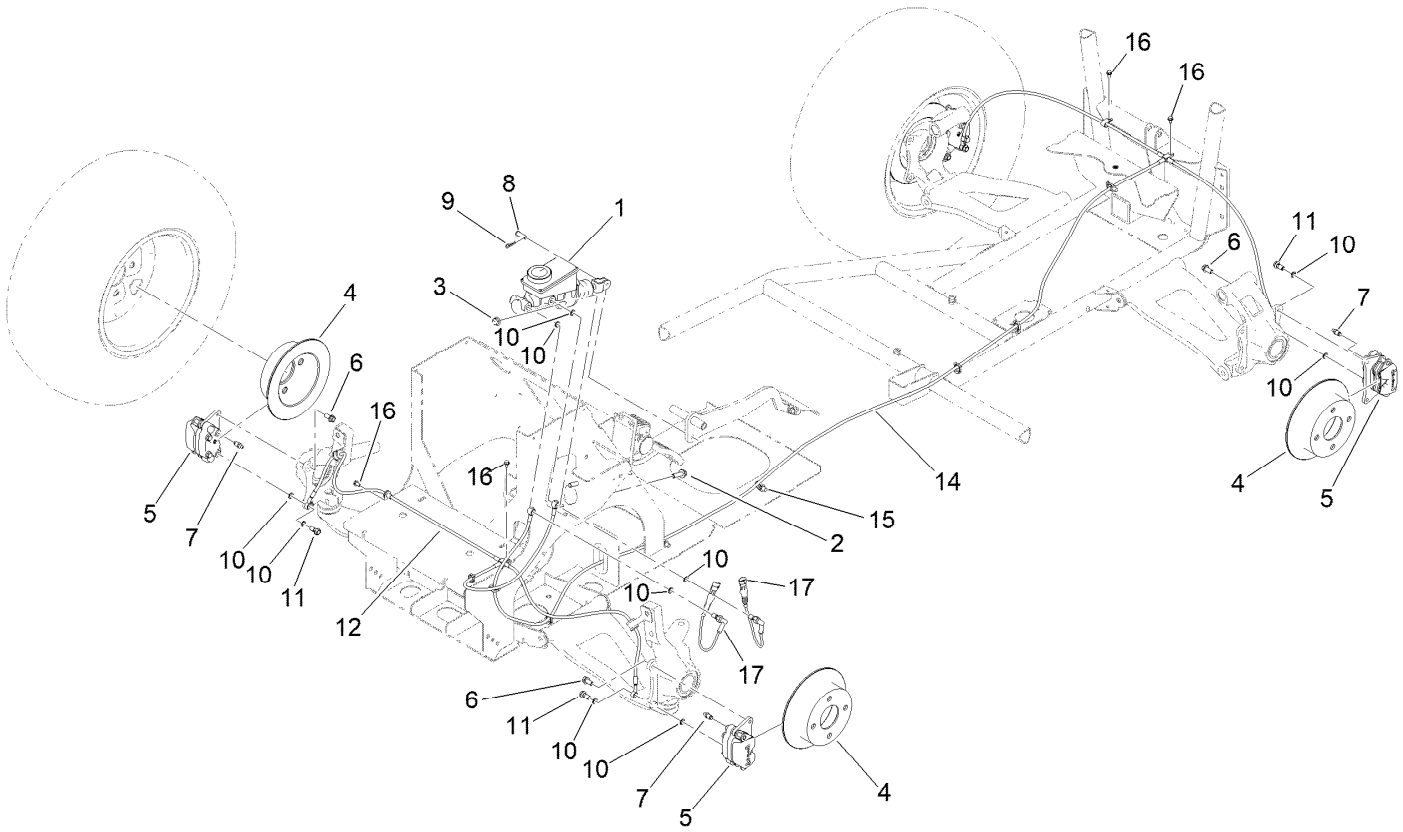

Brake Assembly

Ref.	Part Number	Qty.	Description
1	104-6782	1	Master Cylinder ASM
2	119-4061	2	Screw-HHF
3	119-4042	2	Nut-HF, NI
4	133-7273	4	Rotor-Brake
5	127-7424	4	Brake Caliper ASM
6	144-5550	8	Screw-Spl
7	119-9509	4	Screw-Bleed
8	283-2	1	Pin-Clevis

Ref.	Part Number	Qty.	Description
9	1-806003	1	Pin-Cotter
10	115-2341	12	Washer-Banjo
11	120-4875	4	Bolt-Flange, Banjo
12	137-6768	1	Hose ASM-Brake, Front
14	137-6769	1	Hose ASM-Brake, Rear
15	32180-030	8	Clip-Tie
16	32144-4	4	Screw-HWH
17	144-2227	2	Switch-Brake, Pressure

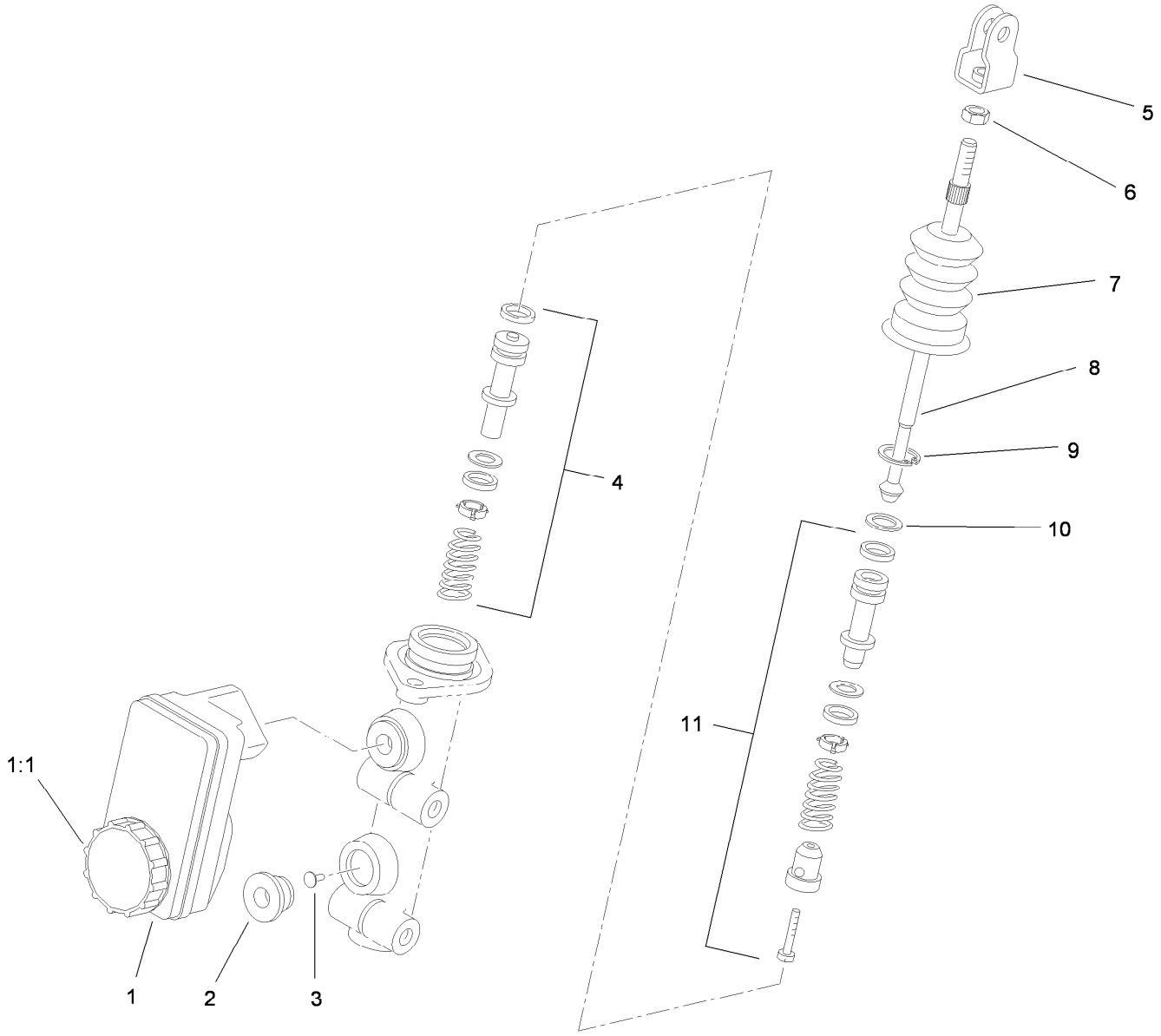

Master Cylinder Assembly No. 104-6782

Ref.	*Part Number*	*Qty.*	*Description*
1	104-6845	1	Reservoir ASM
1:1	92-4112	1	Cap ASM
2	93-8971	2	Seal-Port, Flange
3	92-4103	1	Pin-Stop
4	92-4102	1	Secondary Piston ASM
5	92-4110	1	Clevis
6	21-0360	1	Nut-Hex
7	94-5209	1	Cover-Dust
8	94-5210	1	Rod-Push
9	92-4109	1	Ring-Snap
10	92-4108	1	Retainer-Washer
11	92-4101	1	Primary Piston ASM

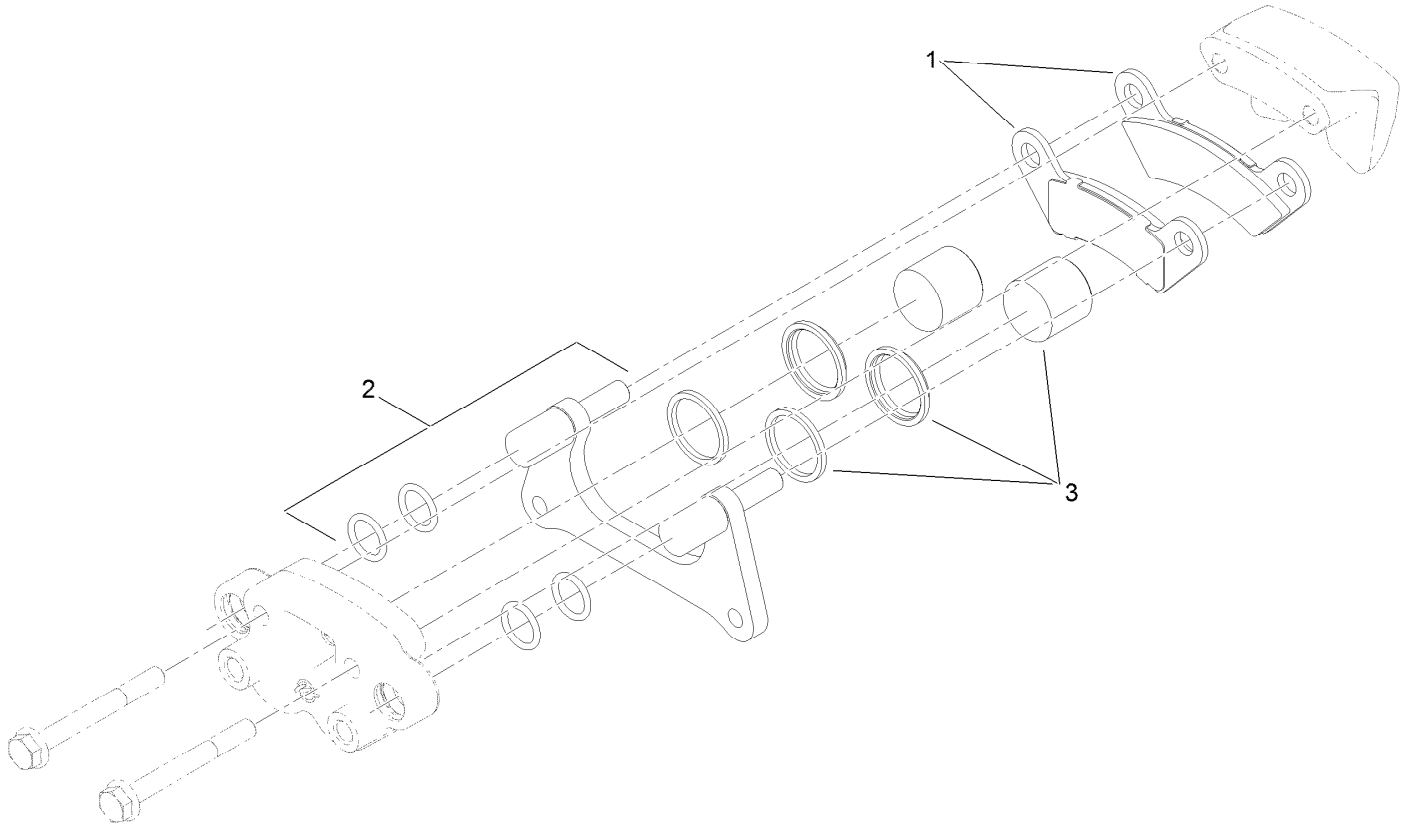

Brake Caliper Assembly No. 127-7424

Ref.	*Part Number*	*Qty.*	*Description*
1	140-2580	1	Brake Pad Service Kit (Front, Qty 4)
2	119-9511	1	Bracket Kit
3	133-0614	1	Piston Kit

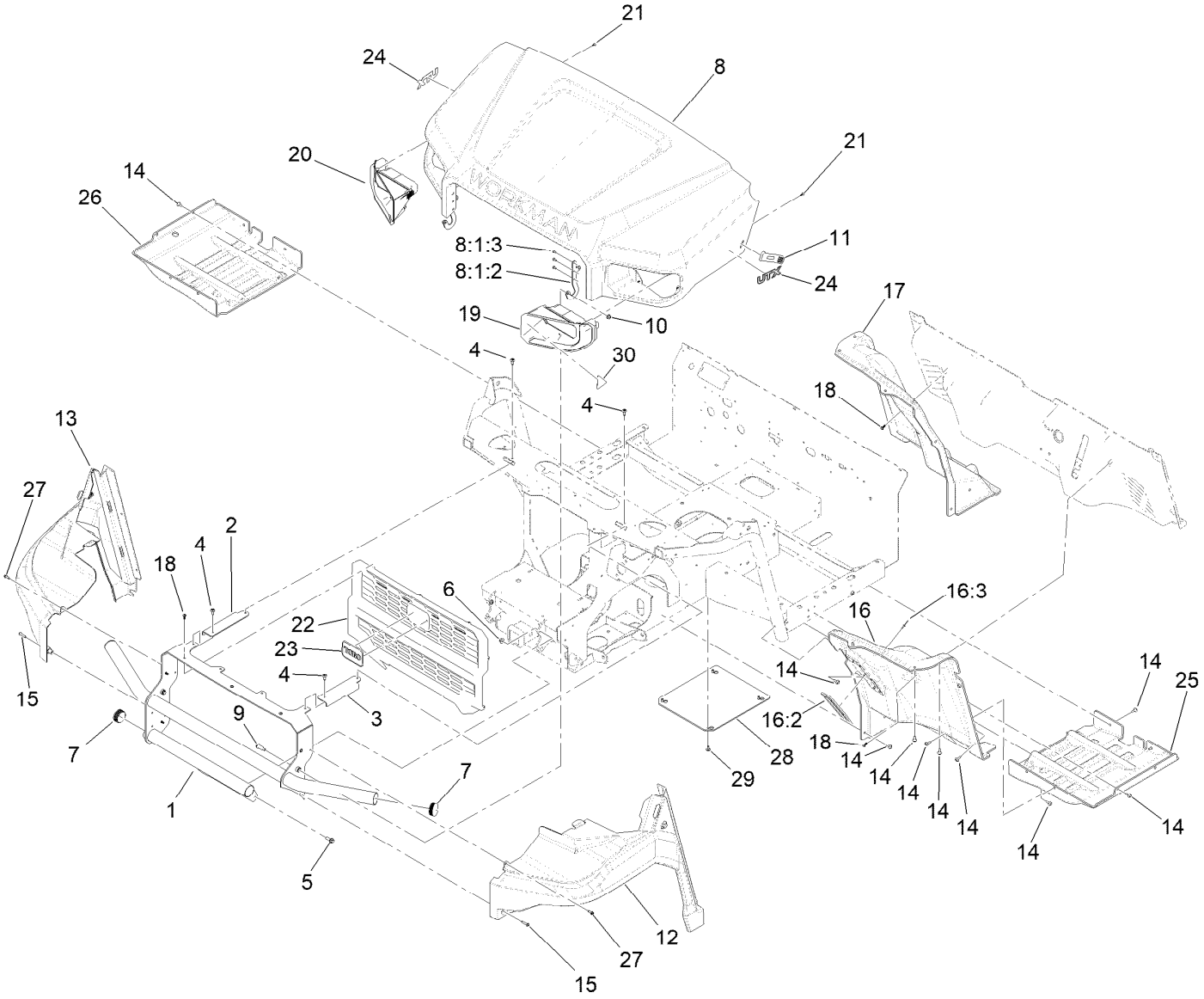

Hood and Front Fender Assembly

Ref.	Part Number	Qty.	Description
1	136-9540	1	UTV Bumper ASM
2	144-2423-05	1	Bracket-Mount, Bumper (RH)
3	144-2421-05	1	Bracket-Mount, Bumper (LH)
4	138-9753	4	Screw
5	3234-42	2	Screw-HHF
6	119-4042	2	Nut-HF, NI
7	137-6827	4	Plug-Plastic
8	137-6820SP	1	UTV Hood ASM
8:1:2	137-6817	2	Bracket-Pivot, Hood
8:1:3	114439	6	Rivet-Blind
9	136-7192	2	Bolt-Shoulder, HHF
10	119-4041	2	Nut-HF
11	137-6856	2	Strap-Hood
12	137-2816SP	1	Fender-Front, LH
13	137-2817SP	1	Fender-Front, RH
14	119-4012	30	Screw-HWHTF
15	132-6777	2	Screw-Twh Thd Roll

Ref.	Part Number	Qty.	Description
16	161-5471	1	Fender ASM-Inner, LH
16:2	161-5383	1	Plate-Reinforcement, Fender
16:3	3269-24	6	Rivet
17	161-5306	1	Fender-Inner, RH
18	138-5775	9	Screw-Delta Point
19	138-5778	1	Headlight ASM, LH
20	138-5779	1	Headlight ASM, RH
21	139-3430	8	Screw-Bhf
22	140-4646	1	Grill-Utx
23	144-2294	1	Emblem-Toro
24	144-1145	2	Decal-Utx, Emblem
25	161-5307	1	Plate-Skid, LH
26	161-5308	1	Plate-Skid, RH
27	49-2040	2	Screw-HWHTF
28	163-4942	1	Plate-Cover, Center
29	126-6266	4	Screw-Tph
30	161-5222	2	Decal-Reflector, Fender

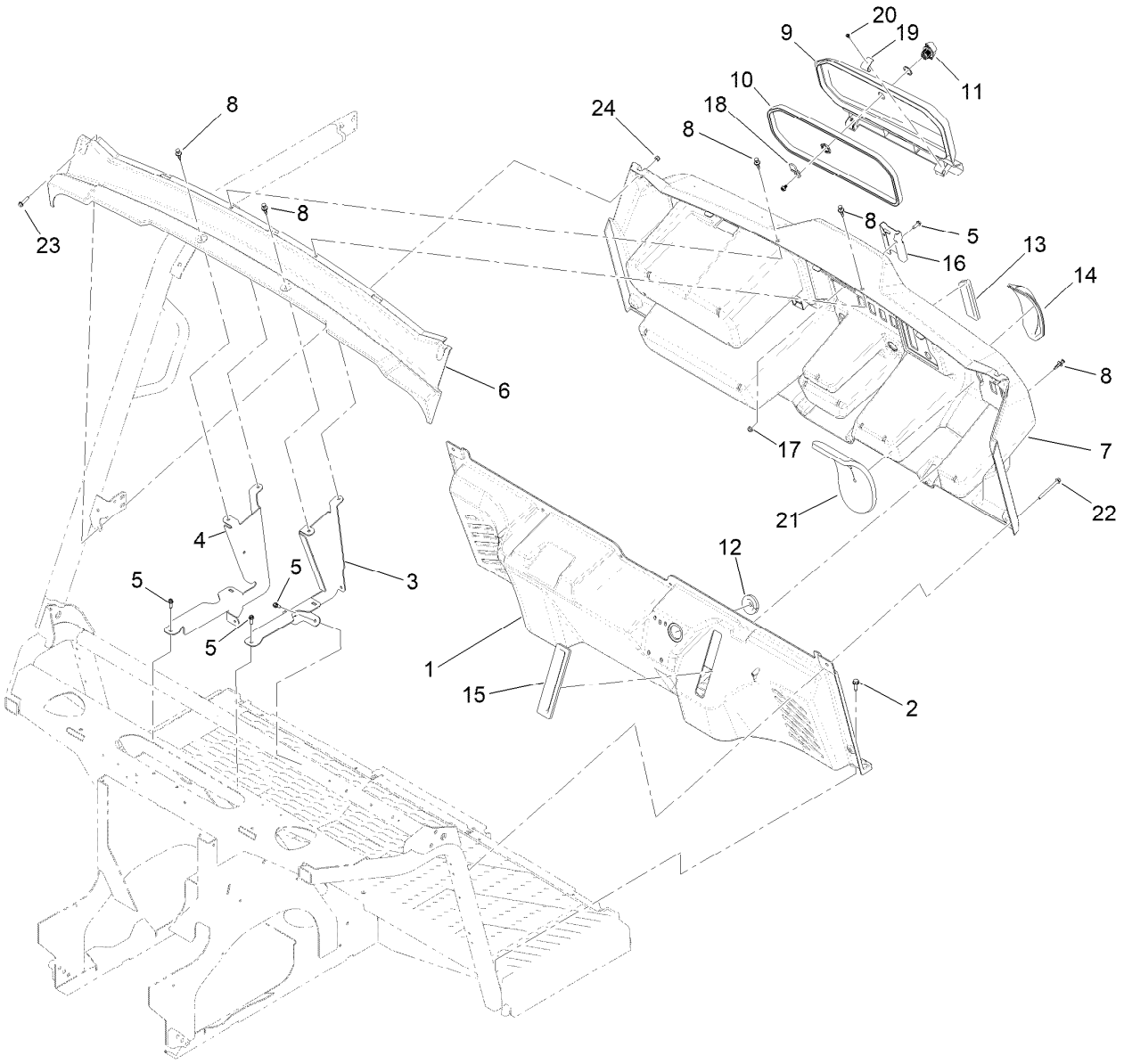

Dash Assembly

Ref.	Part Number	Qty.	Description
1	137-2749SP	1	Footboard
2	701243	4	Screw-Thd Roll, HWH
3	145-2174-03	1	Bracket-Dash, LH
4	145-2178-03	1	Bracket-Dash, RH
5	49-2040	8	Screw-HWHTF
6	138-0041SP	1	Panel-Windshield, Dash
7	138-0040SP	1	Dash
8	125-9622	8	Rivet-Blind
9	138-0039SP	1	Door-Glove Box
10	139-3462	1	Seal-Door, Glove Box
11	140-4679	1	Latch-Quarter Turn
12	163-4938	1	Grommet
13	161-5260	1	Grommet-Shifter
14	161-5261	1	Grommet-Steering Column
15	161-5262	1	Grommet-Brake Pedal
16	139-3449-05	1	Bracket-Mount, Radio
17	104-7201	4	Nut-HF, NI
18	140-4680	1	Cam-Latch, Quarter Turn
19	145-0840	2	Bracket-Glove Box
20	32144-42	2	Screw-Thd Form, HWH
21	147-2822	1	Seal-Foam, Steering Column
22	138-3653	2	Screw-HHF
23	32144-86	2	Screw-HWHTF
24	3296-73	2	Nut-Lock, NI

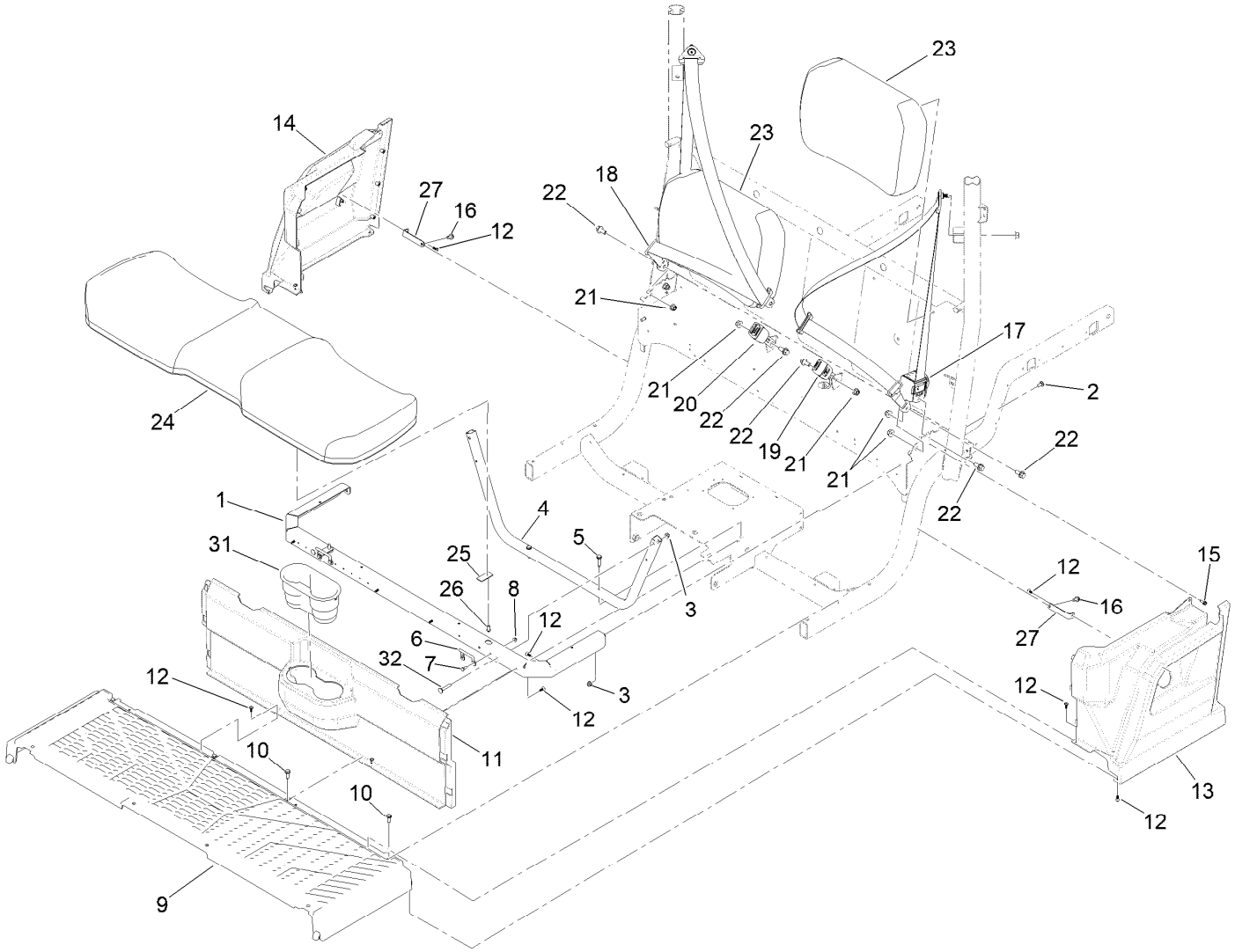

Seat Base Assembly

Ref.	Part Number	Qty.	Description
1	137-6896-03	1	Frame-Seat, Bottom
2	137-3061	2	Bolt-CARR
3	119-4041	4	Nut-HF
4	137-2746-0P	1	Tube-Support, Seat
5	32144-57	2	Screw-Thd Roll
6	137-6888	2	Wire-Hinge
7	321-3	4	Screw-HH
8	104-7201	4	Nut-HF, NI
9	137-6874SP	1	Plate-Floor
10	701243	4	Screw-Thd Roll, HWH
11	137-6875SP	1	Panel-Seat Base
12	138-5775	14	Screw-Delta Point
13	137-2813SP	1	Panel-Seat Base, LH
14	137-2814SP	1	Panel-Seat Base, RH
15	49-2040	8	Screw-HWHTF

Ref.	Part Number	Qty.	Description
16	32144-70	2	Screw-HWHTF
17	140-2676	1	Retractor-Seat Belt, LH
18	140-2677	1	Retractor-Seat Belt, RH
19	140-2678	1	Buckle-Seat Belt, W/Switch
20	140-2679	1	Buckle-Seat Belt
21	144-2269	8	Nut-Nylk,HF
22	144-2289	6	Screw-HHF
23	145-2211	2	Seat Backrest ASM
24	145-2207	1	Bench Seat Bottom ASM
25	145-7954	2	Bracket-Hinge, Seat
26	3274-55	2	Screw-HSBH
27	138-9411	2	Support-Panel-Side
31	139-3454	1	Cup Holder
32	3230-5	2	Bolt-CARR

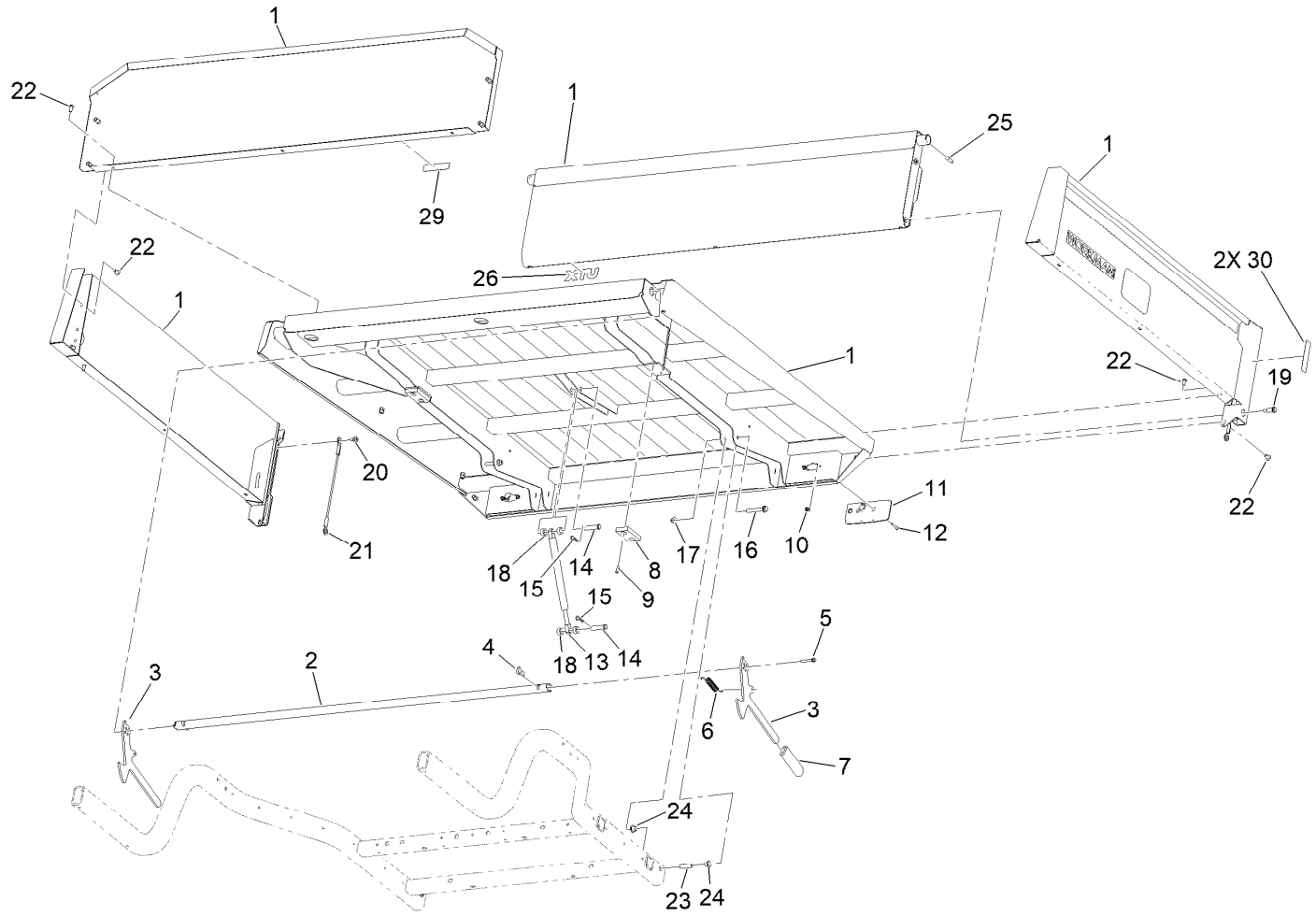

Cargo Bed Assembly

Ref.	Part Number	Qty.	Description
1		1	Cargo Bed Kit ●
2	139-4421-03	1	Tube-Latch
3	147-2709	2	Latch-Bed
4	139-4422	2	Plate-Threaded
5	147-2746	2	Screw-HHF,Lock
6	140-2663	2	Spring-Extension
7	1-633268	2	Grip-Lever
8	93-9719	2	Block-Wear
9	3274-69	4	Screw-HSBH
10	120-4578	4	Nut-HF
11	139-2071	2	Light-Rear Tail/Stop/Turn
12	3250-52	4	Screw-PPH
13	139-4417	1	Spring-Gas
14	283-5	2	Pin-Clevis
15	3290-467	2	Pin-Hair
16	3234-39	2	Screw-HHF
17	119-4042	2	Nut-HF, NI
18	66-6500	4	Spacer-Wheel
19	147-2747	2	Screw-Shoulder,HHF,Lock
20	120-9471	4	Bolt-Shoulder
21	130-5726	2	Lanyard
22	138-9753	15	Screw
23	144-2211	2	Sleeve-Pivot, Bed
24	125-5239	4	Bushing-Flange
25	133-7146	2	Plug-Tailgate, Anti-Rattle
26	144-1145	1	Decal-Utx, Emblem
29	144-1144	1	Decal-Cargo Bed Safety
30	161-5428	2	Decal-Reflector, Rear

● Not serviced separately

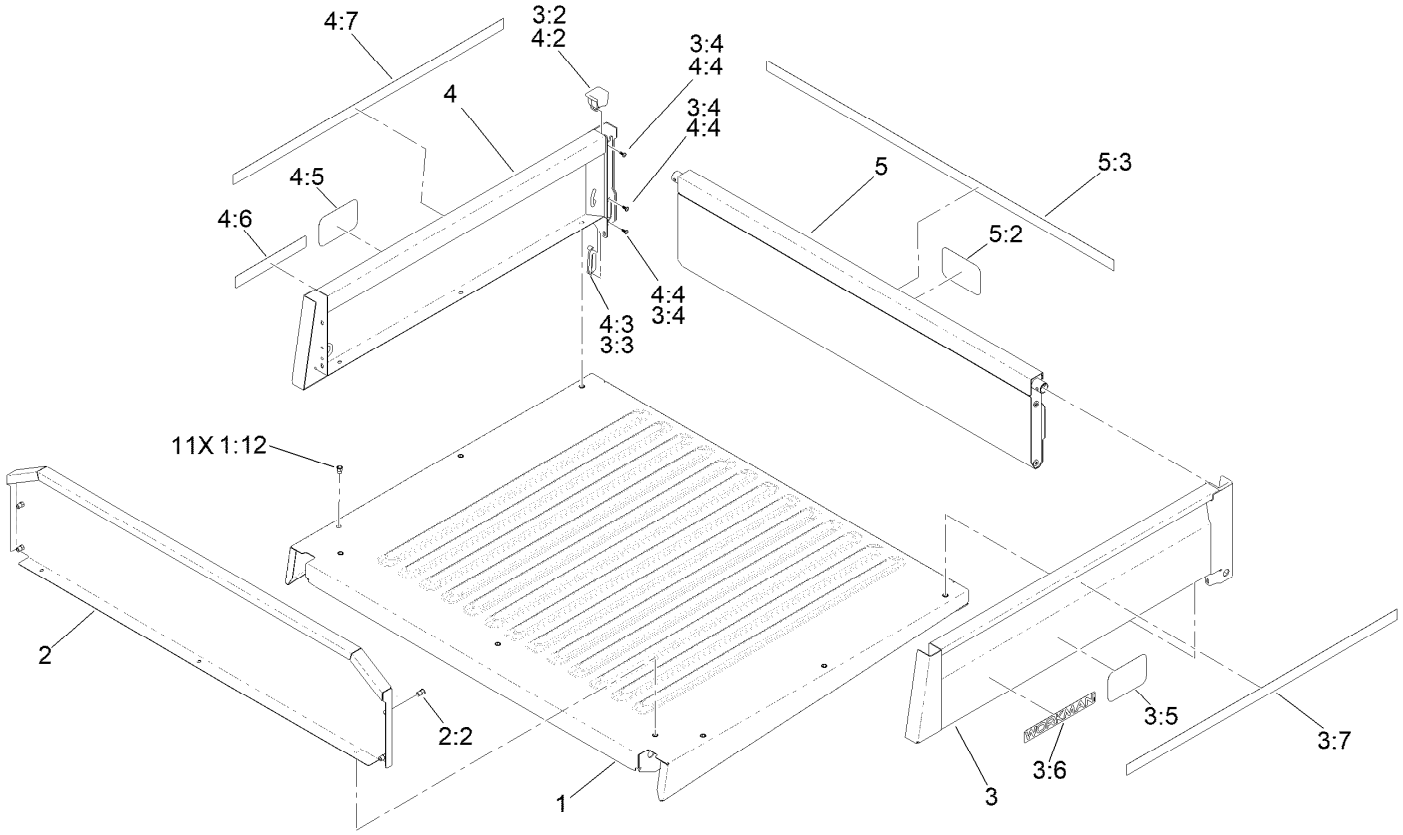

Cargo Bed Kit Assembly

Ref.	Part Number	Qty.	Description
1	147-2750	1	Flat Bed ASM
1:12	138-2899	15	Nut-Clinch
2	140-4675	1	Panel ASM-Front, Bed
2:2	138-2899	4	Nut-Clinch
3	147-8103	1	Bed Side ASM, LH
3:2	140-2690	1	Retainer-Tailgate
3:3	139-4690	1	Bushing-Tailgate
3:4	138-5775	3	Screw-Delta Point
3:5	105-1217	1	Decal
3:6	140-4835	1	Decal-Workman, Gray
3:7	144-2277	1	Decal-Red Stripe, 43"

Ref.	Part Number	Qty.	Description
4	147-8104	1	Bed Side ASM, RH
4:2	140-2690	1	Retainer-Tailgate
4:3	139-4690	1	Bushing-Tailgate
4:4	138-5775	3	Screw-Delta Point
4:5	105-1217	1	Decal
4:6	140-4835	1	Decal-Workman, Gray
4:7	144-2277	1	Decal-Red Stripe, 43"
5	147-8102	1	Tailgate ASM
5:2	105-1217	1	Decal
5:3	144-2281	1	Decal-Red Stripe, 55.25"

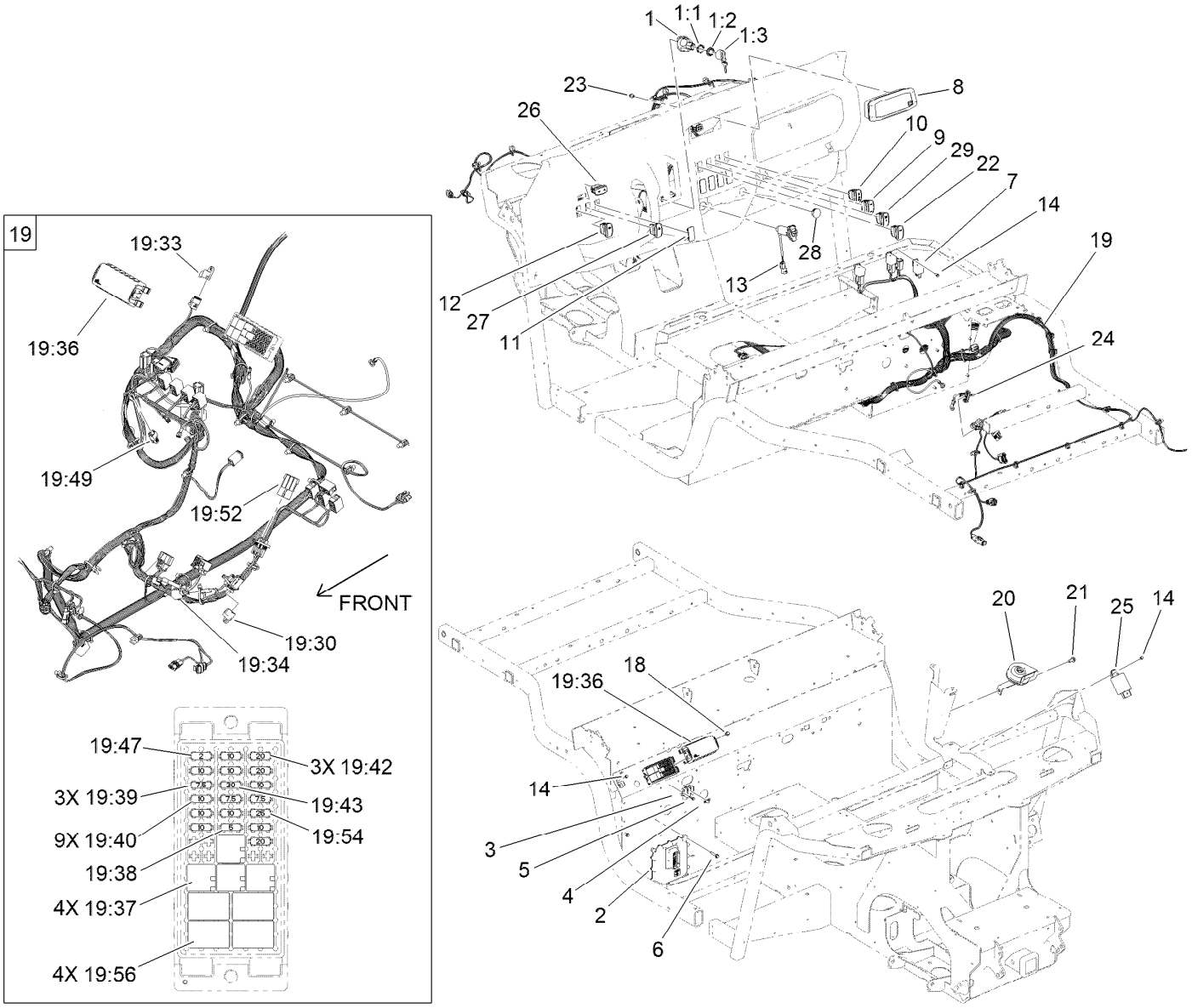

Electrical Assembly

Ref.	Part Number	Qty.	Description
1	161-4693	1	Switch-Ignition
1:1	121-5160	1	Nut-Hex
1:2	122-2704	1	Nut-Face, M22 (Plastic)
1:3	121-5162	1	Set-Key, Ignition
2	127-2770	1	Controller
3	42862	1	Block-Terminal, Ground
4	42863	1	Strip-Jumper
5	100-4351	2	Screw-HWH
6	32144-110	4	Screw-HWH
7	99-7435	3	Relay
8	147-8095	1	Cluster-Instrument
9	144-2440	1	Switch-Rocker, On-None-On
10	144-2445	1	Switch-Rocker, On-On-On
11	99-7420	5	Plug-Hole
12	144-2405	1	Switch-Rocker, On-None-On
13	139-3420	1	Port-USB
14	32144-112	5	Screw-HWH
18	33103-012	2	Screw-HHF

Ref.	Part Number	Qty.	Description
19	122-2315	1	Harness-Wire, Utx Gas 2 Passenger
19:30	32180-156	1	Cap-Plug, 6 Way
19:33	32180-089	1	Cap-Plug, 3 Way
19:34	100-4918	1	Diode
19:36	32180-393	1	Cover-Chief, Bric
19:37	126-3991	4	Relay-Micro
19:38	121-8864	1	Fuse-Mini Blade, 5 Amp
19:39	121-8865	3	Fuse-Mini Blade, 7.5 Amp
19:40	121-8866	9	Fuse-Mini Blade, 10 Amp
19:42	121-8868	3	Fuse-Mini Blade, 20 Amp
19:43	121-8870	1	Fuse-Mini Blade, 30 Amp
19:47	121-8861	1	Fuse-Mini Blade, 2 Amp
19:49	32180-282	1	Conn, Res, 120 Ohm
19:52	32160-128	1	Connector-Mp280, 3M (Sealed)
19:54	121-8869	1	Fuse-Mini Blade, 25 Amp
19:56	126-6157	4	Relay-Micro 280, Spdt
20	139-4557	1	Horn-ASM
21	32144-70	1	Screw-HWHTF

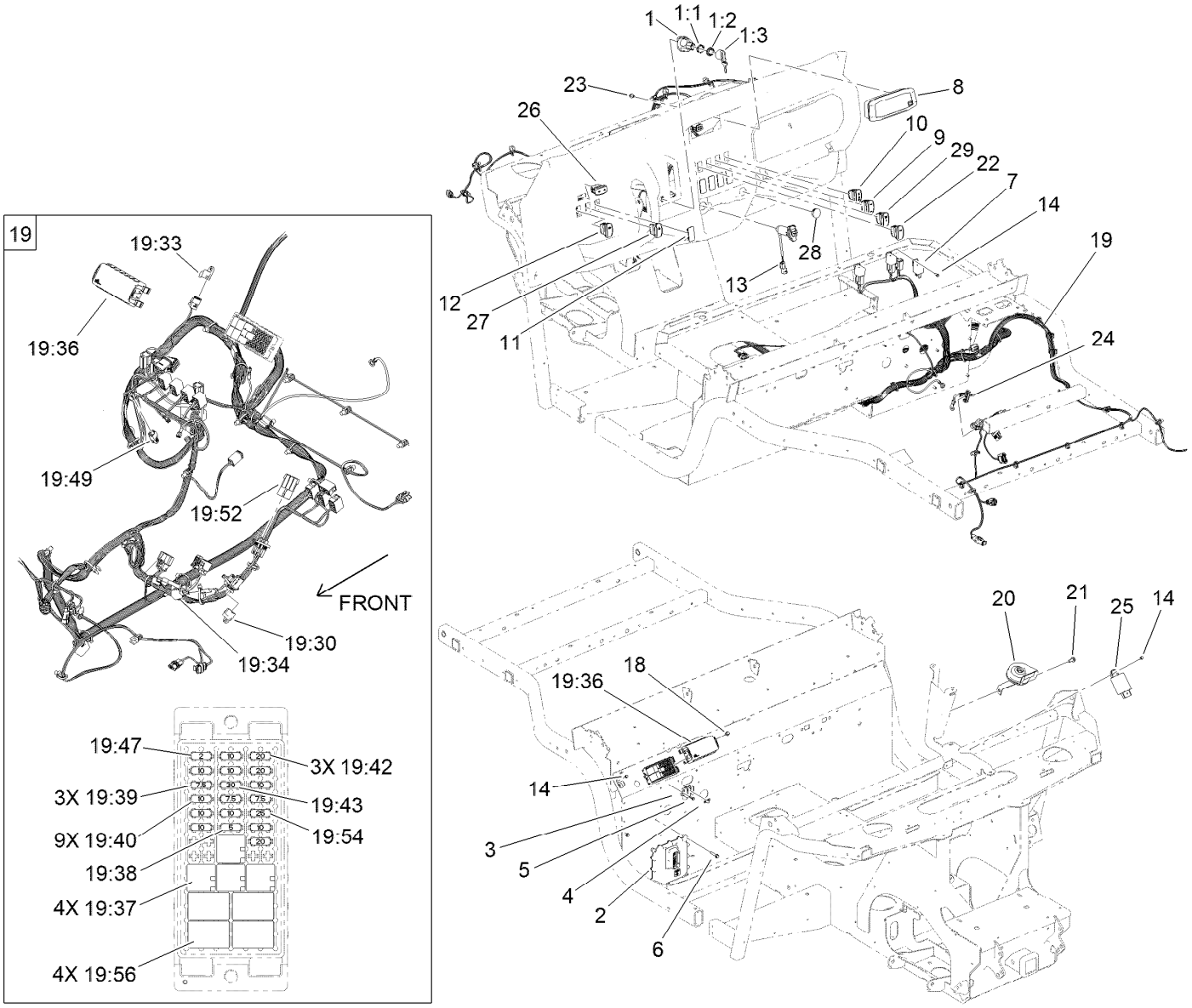

Electrical Assembly (continued)

Ref.	Part Number	Qty.	Description
22	144-2415	1	Switch-Rocker, (On)-None-Off
23	3234-13	2	Screw-HHF
24	99-3441	1	Harness-Wire, Fusible Link
25	139-2080	1	Flasher-Dual Rate
26	144-2425	1	Switch-Rocker, On-Off-On
27	144-2400	1	Switch-Rocker, On-None-On
28	145-2160	1	Plug-Panel
29	145-2200	1	Switch-Rocker, (On)-On-Off

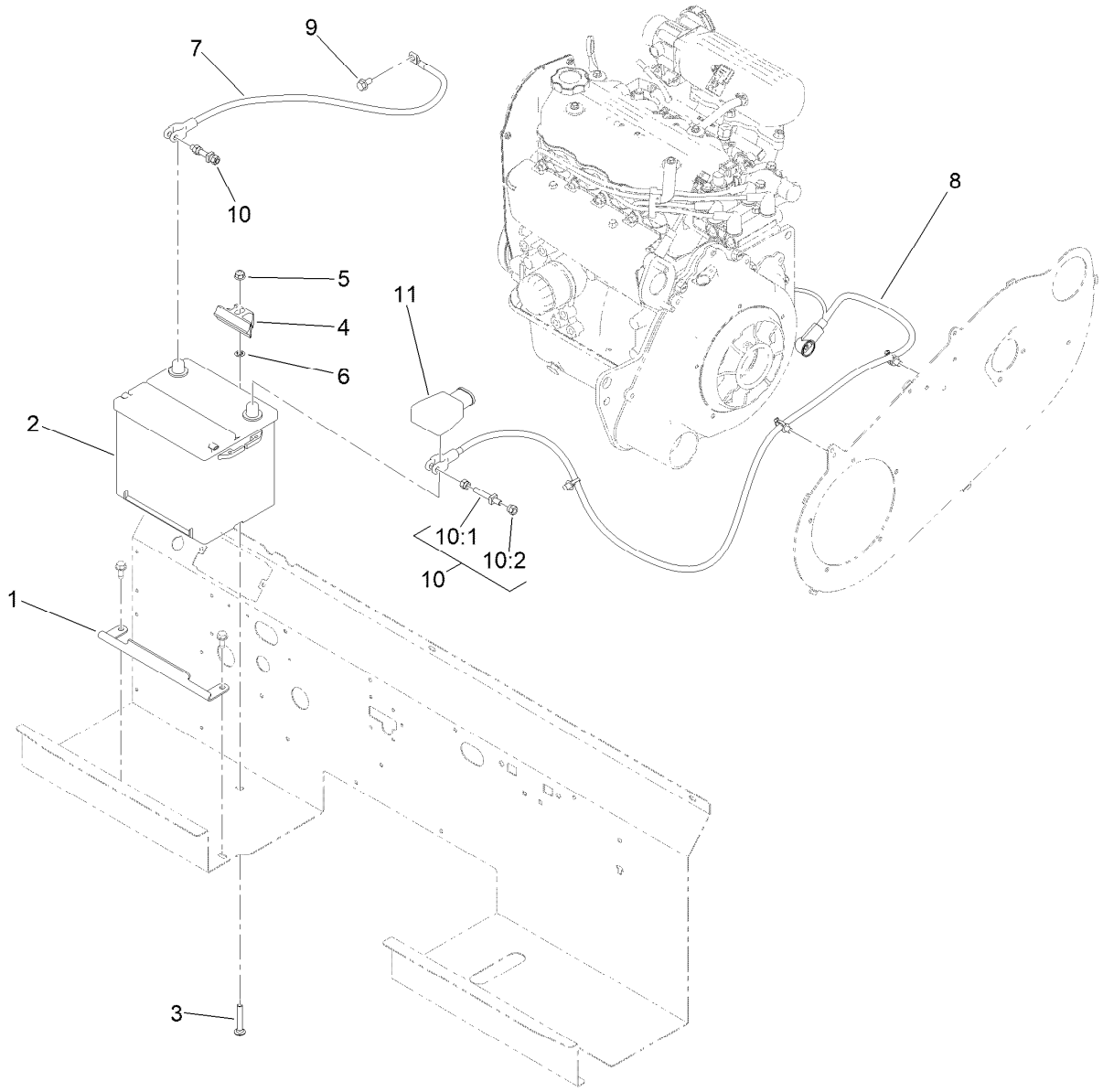

Battery Assembly

Ref.	*Part Number*	*Qty.*	*Description*
1	147-8051	1	Hold Down-Battery
2	106-5187	1	Battery- Dry, 12V, 525 CCA
3	3230-6	1	Bolt-CARR
4	138-6335	1	Retainer-Battery
5	119-4041	1	Nut-HF
6	109-5667	1	Nut-Push
7	122-1781	1	Cable-Battery, Bk ASM
8	122-1780	1	Cable-Battery, Rd ASM
9	33104-016	1	Screw-HHF
10	112-9921	2	Bolt ASM
10:1	32180-107	1	Bolt-Clamp, Battery
10:2	32180-108	2	Nut-Hex Shoulder
11	32180-110	1	Insulator-Lead Cast

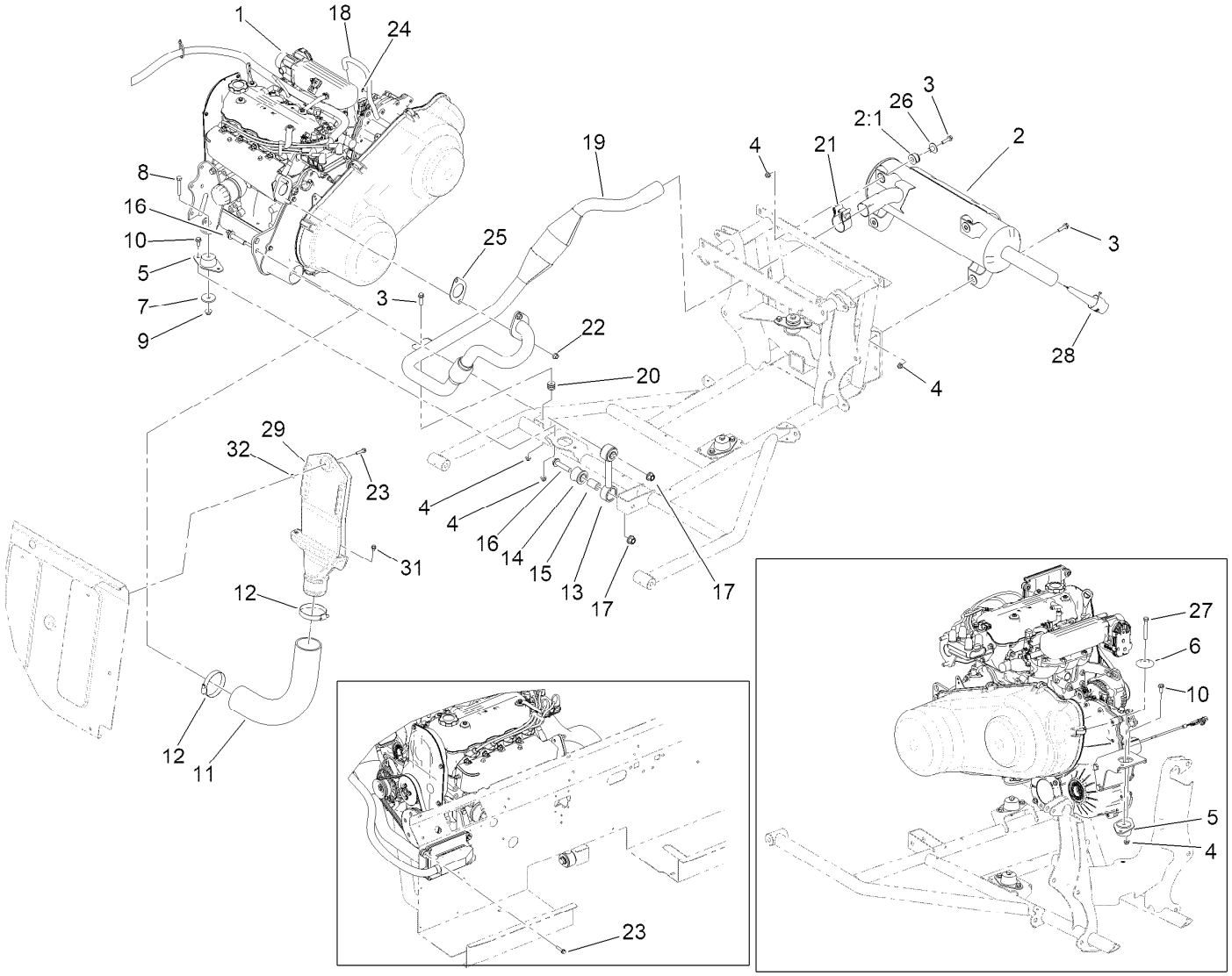

Engine Drivetrain and Exhaust Assembly

Ref.	Part Number	Qty.	Description
1		1	Engine/Drivetrain ASM ●
2	138-9335	1	Muffler ASM (With Mounts)
2:1	138-9300	4	Isolator-Mount, Muffler
3	3234-36	5	Screw-HHF
4	119-4041	11	Nut-HF
5	139-0856	3	Mount-Engine
6	138-6462	1	Support-Isolator
7	80-8560	2	Washer-Hardened
8	323-11	2	Screw-HH
9	119-4042	2	Nut-HF, NI
10	3234-47	6	Screw-HHF
11	147-2704	1	Duct-Inlet, Cvt
12	2412-125	2	Clamp-Hose
13	140-4685	1	Link Rod ASM
14	140-4697	2	Bushing, Rubber
15	109-5010	2	Spacer

Ref.	Part Number	Qty.	Description
16	3234-46	2	Screw-HHF
17	139-1689	2	Nut-HF
18	110-4110	1	Hose-Fuel
19	140-2617	1	Pipe-Exhaust
20	131-5945	1	Isolator-Engine
21	144-2413	1	Clamp-Manifold (1.87" DIA)
22	136-8683	2	Nut-Lock
23	32144-110	5	Screw-HWH
24	32151-86	1	E-Ring
25	145-2119	1	Gasket-Exhaust
26	138-9301	4	Mount-Top Hat, Muffler
27	323-12	1	Screw-HH
28	144-2433	1	Arrester- Spark, 1.75"
29	147-2700	1	Hood-Cvt Intake
31	3234-26	2	Screw-HHF
32	1-803037	1	Nut-Retaining

● Not serviced separately

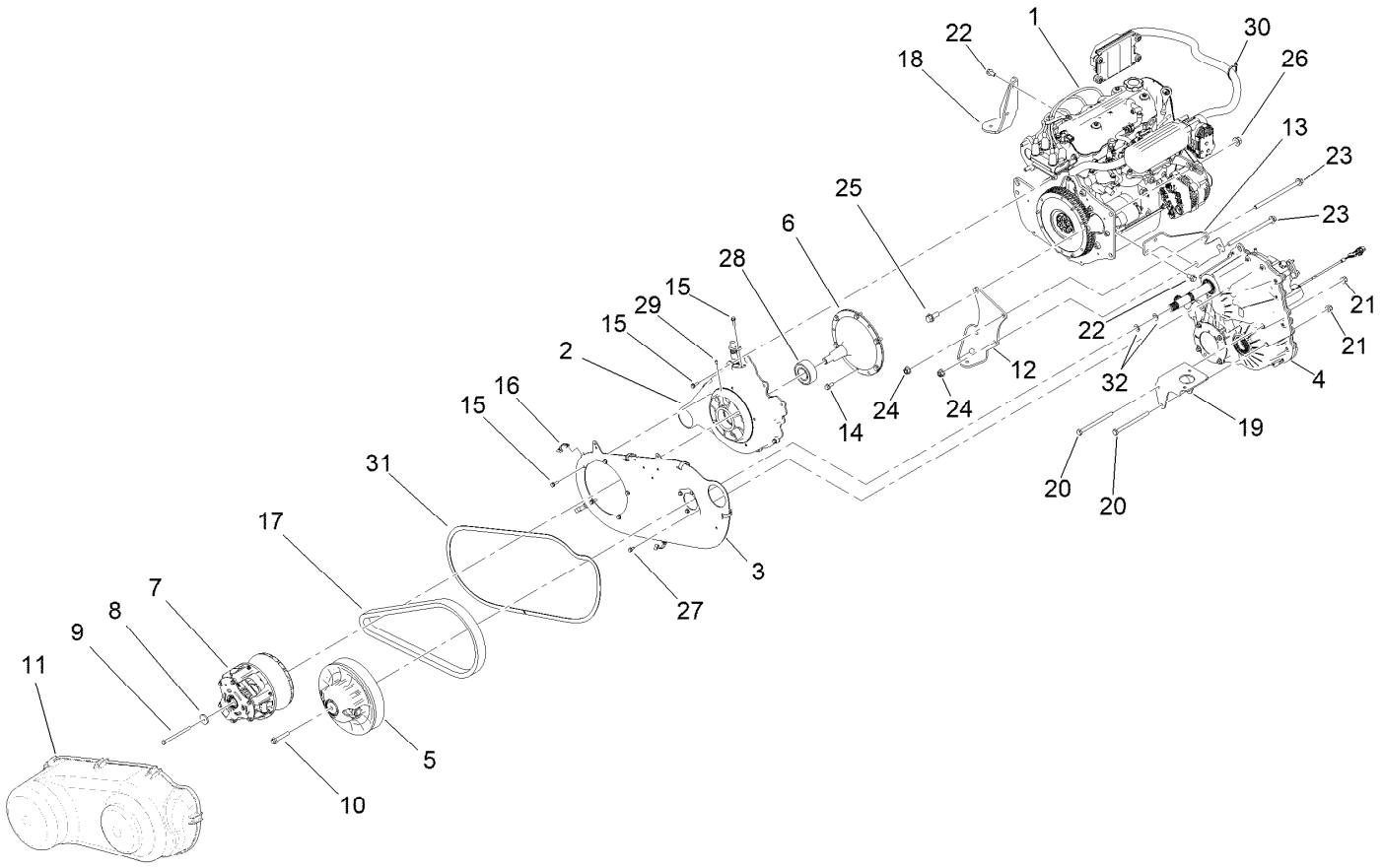

Engine, Transaxle and Clutch Assembly

Ref.	Part Number	Qty.	Description
1	144-2216	1	Engine (Gas, 40 HP)
2	145-2143	1	Housing-Flywheel, Gas
3	161-5254	1	Plate-Spanner
4	140-2611	1	Transaxle ASM
5	147-8173	1	Clutch-Secondary
6	145-2145	1	Adapter-Clutch
7	147-8172	1	Clutch-Primary
8	104-6550	1	Washer-Clutch
9	99-7201	1	Screw-HH
10	140-4777	1	Screw-HHF
11	140-2603	1	Enclosure-Cvt
12	147-8071	1	Bracket-Transmission, LH
13	145-7785-0P	1	Bracket-Trans, RH (Gas)
14	33104-020	6	Screw-HHF
15	110-3986	14	Screw
16	140-4669	6	Clip-Spring
17	145-7789	1	Belt-Variable

Ref.	Part Number	Qty.	Description
18	147-8093	1	PSI Front Engine Mount ASM
19	140-2624-0P	1	Bracket-Drivetrain, Rear
20	33115-140	2	Screw-HH
21	103-9511	2	Nut-Flg
22	120-4839	4	Screw-HHF
23	140-2689	2	Screw-HH
24	114-8417	2	Nut-HF, NI
25	3234-38	2	Screw-HHF
26	139-1689	2	Nut-HF
27	104-2628	4	Screw
28	145-2146	1	Bearing-Ball
29	133-1717	1	Screw-Set
30	3290-378	1	Tie-Cable
31	145-7799	1	Gasket-Cover, Cvt
32	36-4780	2	Washer-Plain

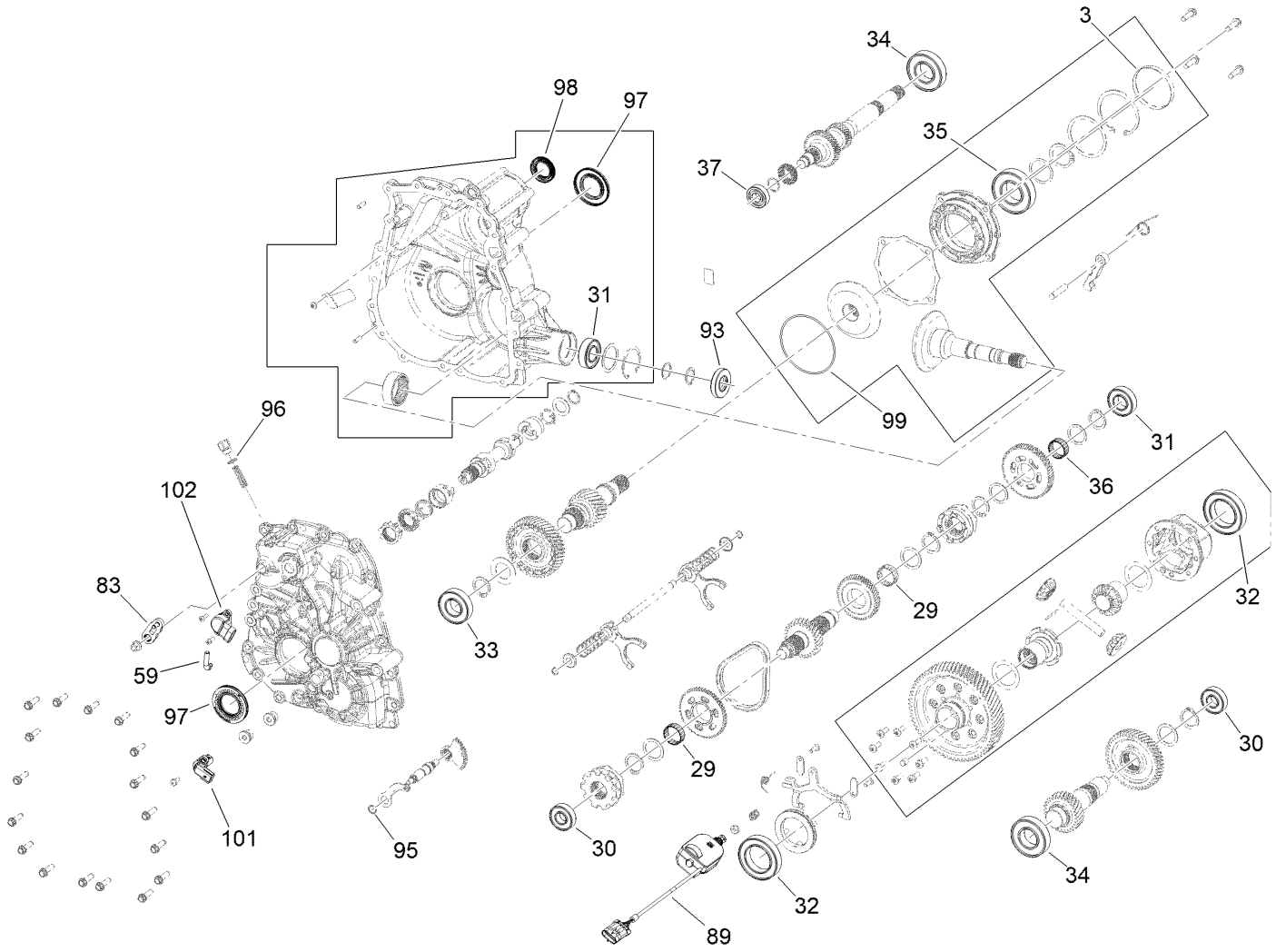

Transaxle Assembly No. 140-2611

Ref.	Part Number	Qty.	Description
3	145-2030	1	Plug-Expansion 80MM X 10MM
29	130-4616	2	Bearing-Needle
30	145-2031	2	Bearing, Ball 6204 C3
31	145-2032	2	Bearing, Ball 6205 C3
32	130-4666	2	Bearing-Ball
33	145-2033	1	Bearing, Ball 6206 C3
34	145-2034	2	Bearing, Ball 6207 C3
35	145-2035	1	Bearing, Ball 6208 C3
36	130-4618	1	Bearing-Needle
37	145-2036	1	Bearing, Ball 6203 C3
59	145-2037	1	Tube,Vent, 90-1/4" Hose
83	145-2038	1	Subassembly, Bellcrank
89	145-2041	1	Shift Actuator, 2 Position
93	145-2042	1	Seal, Triple Lip, 0.984 X 2.047 X 0.394
95	145-2043	1	O-Ring
96	145-2044	1	O-Ring, 0.530 ID X .082 Wide
97	145-2045	2	Seal, Triple Lip, Viton, 40 X 70 X 7
98	145-2046	1	Seal, Triple Lip, 1.180 X 1.8520 X 0.315
99	145-2047	1	O-Ring, Nitrile
101	145-2039	1	Sensor,Speed, Transaxle
102	145-2040	1	Sensor, Assembly, Rotary Position
103	145-2048	1	Toro Premium Synthetic Transaxle Fluid ●

● Not illustrated

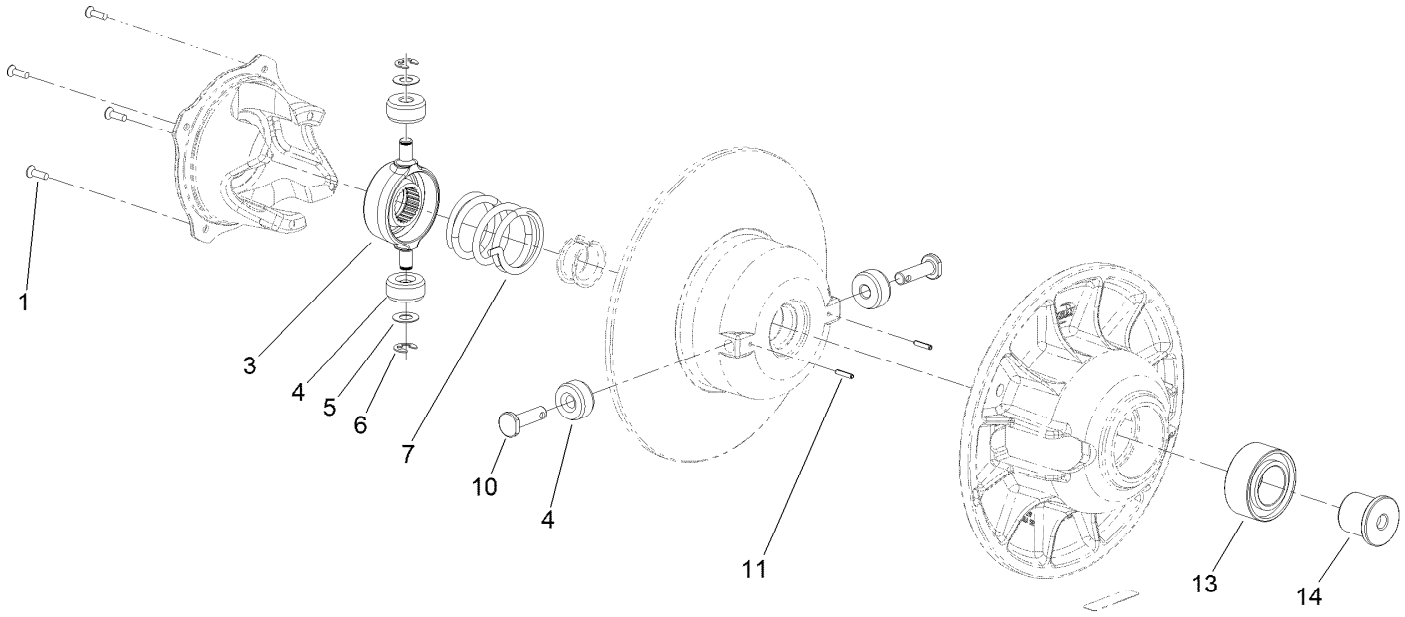

Secondary Clutch Assembly No. 147-8173

Ref.	*Part Number*	*Qty.*	*Description*
1	145-2104	4	Screw, Machine Torx Sfch 10-32 X .625
3	145-2025	1	Spider 9.5 25T Mach
4	145-2026	4	Roller-Clutch 1.135 X .550
5	130-4059	2	Washer-Thrust
6	130-4058	2	E-Ring
7	145-2027	1	Spring-Comp 2.00 OD Secondary 175-320
10	130-4063	2	Pin-Roller
11	130-4065	2	Pin-Spring, Slotted
13	145-2028	1	Bearing-Ball
14	147-8180	1	Sleeve-Shoulder

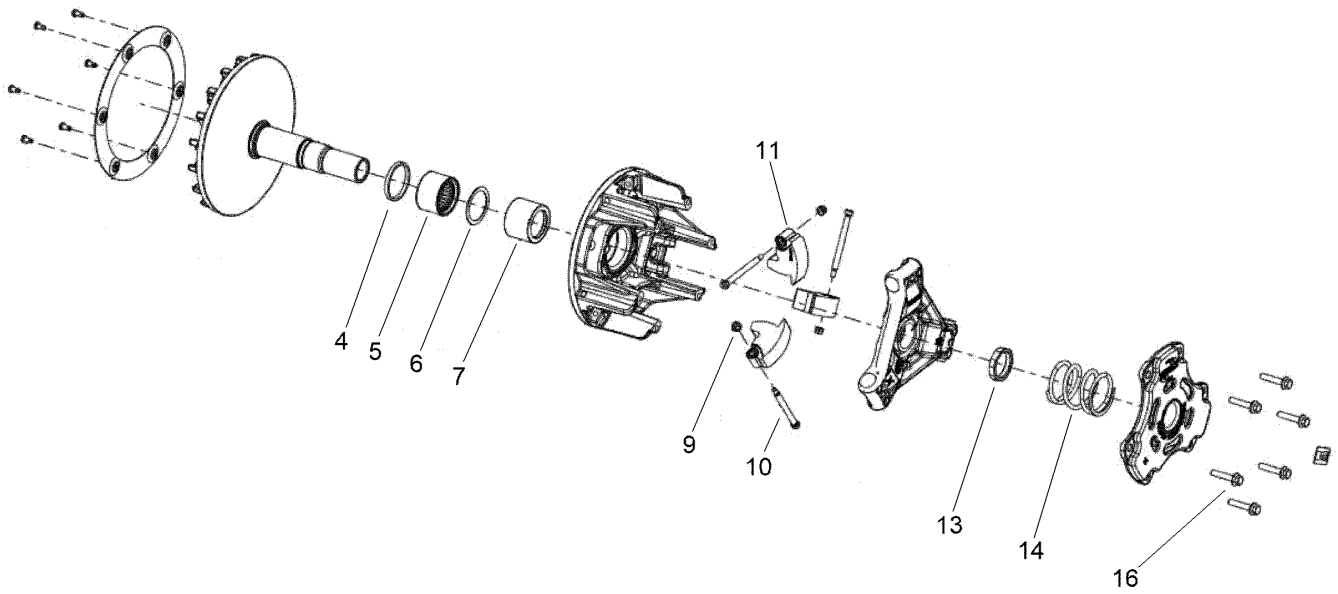

Primary Clutch Assembly No. 147-8172

Ref.	*Part Number*	*Qty.*	*Description*
4	145-2018	1	Washer-Thrust
5	147-8178	1	Subassembly, Idler Primary
6	130-4069	1	Washer-Thrust
7	147-8177	1	Cap-Idler Sleeve
9	145-2103	3	Nut, Lock Hex 10-24 Flexloc
10	119-6016	3	Screw-Shoulder
11	145-2021	3	Weight-Clutch M17-198
13	161-5255	1	Nut-Jam
14	145-2022	1	Spring-Compression 2.00 OD Primary 70-13
16	145-2024	6	Screw-Hex Flange 1/4-20 X 1.25

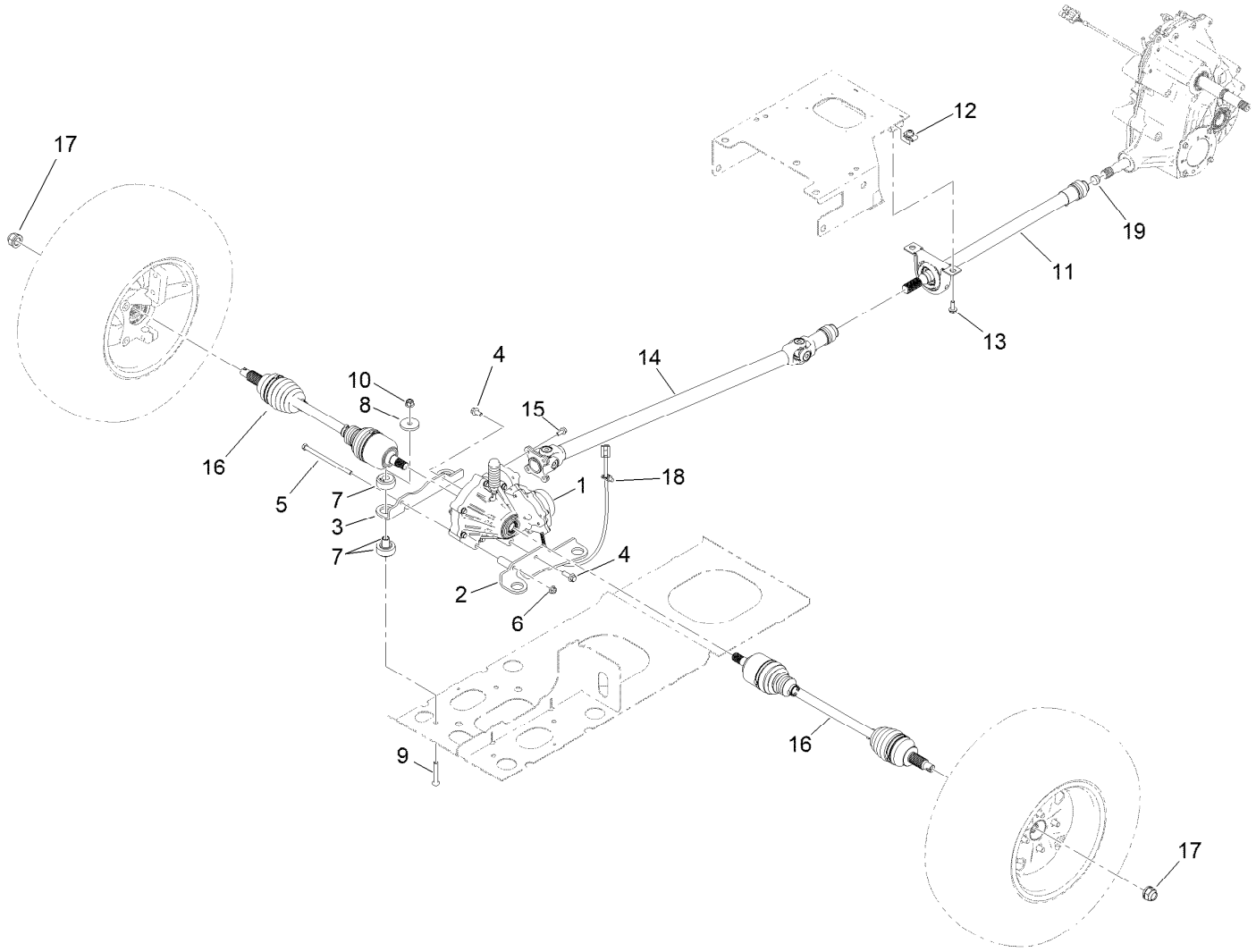

Front Differential and Driveshaft Assembly

Ref.	*Part Number*	*Qty.*	*Description*
1	140-4752	1	Differential-Front
2	147-8083	1	Mount ASM-Differential, LH
3	161-5242	1	Mount-Differential, RH
4	145-7778	2	Screw-HHF
5	323-26	1	Screw-HH
6	119-4042	1	Nut-HF, NI
7	147-2708	4	Mount-Isolator
8	109-6919	4	Washer-Plain
9	144-2215	4	Screw-Bht
10	114-8417	4	Nut-HF, NI

Ref.	*Part Number*	*Qty.*	*Description*
11	140-4771	1	Driveshaft ASM-Intermediate
12	105-4886	2	Nut-Tinnerman
13	3234-42	2	Screw-HHF
14	140-2647	1	Driveshaft ASM
15	139-3392	4	Screw-Lock
16	140-2644	2	Cv Axle ASM, Front
17	115-2164	2	Nut-Spindle
18	32180-030	1	Clip-Tie
19	145-7787	1	Bumper-Drive Shaft

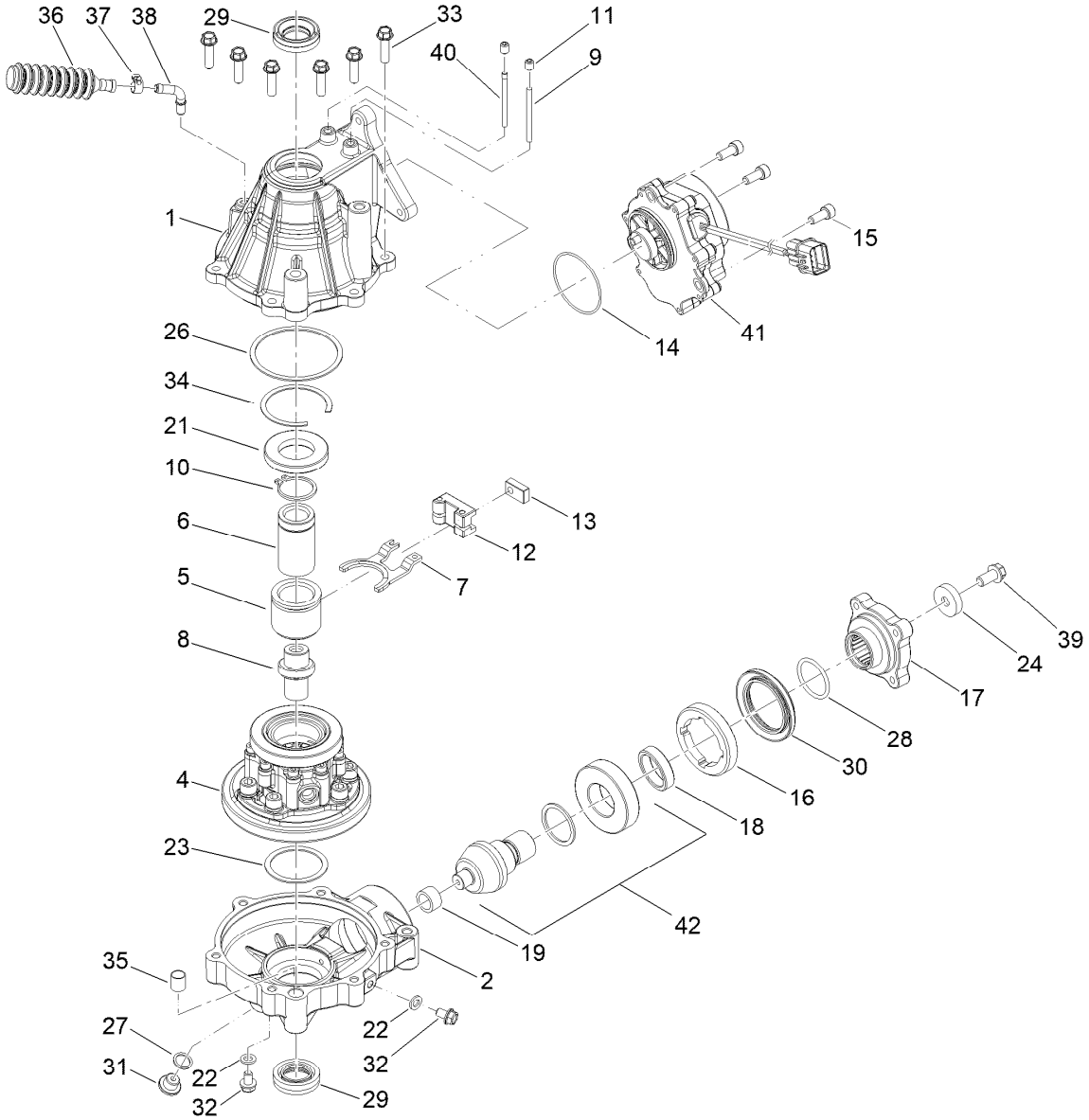

Front Differentail Assembly No. 140-4752

Ref.	Part Number	Qty.	Description
1	145-7895	1	Cover
2	145-7896	1	Housing
4	145-7898	1	Planet Carrier Sub-ASM
5	145-7899	1	Clutch
6	145-7900	1	Support Ring
7	145-7901	1	Fork
8	145-7902	1	Gear A
9	145-7903	1	Pin, 5 X 62L
10	145-7904	1	Retaining Ring, External 34
11	145-7905	2	Bolt, M10 X 10L
12	145-7906	1	Slider A
13	145-7907	1	Slider B
14	145-7908	1	O-Ring, 62 I.D. X 2 Wide
15	145-7909	3	Screw, Socket Head, M8X20L
16	145-7910	1	Nut, M74
17	145-7911	1	Flange
18	145-7912	1	Bushing
19	145-7913	1	Needle Bearing, Hk1612
21	145-7915	1	Ball Bearing, 16007
22	145-7916	2	Washer, 8.2 X 16 X 2T

Ref.	Part Number	Qty.	Description
23	145-7917	1	Shim, 50.5 X 61
24	145-7918	1	Lock Washer
26	145-7920	1	Shim, 79 X 89
27	145-7921	1	Washer, 14.5 X 22 X 1T
28	145-7922	1	O-Ring, P26
29	145-7923	2	Seal, 25 X 45 X 7T X 11T
30	145-7924	1	Seal, 40 X 75 X 8T X 12T
31	145-7925	1	Plug, M14 X 9.5L
32	145-7926	2	Screw, Hex Head, M8 X Pi.25 X 12L
33	145-7927	6	Screw, Hex Head, M8 X P1.25 X 30L
34	145-7928	1	Retaining Ring, Internal 62
35	145-7929	1	Location Pin
36	145-7930	1	Breathing Tube
37	145-7931	1	Ring
38	145-7932	1	Tube, Vent, 90 DEG
39	145-7933	1	Screw, Hex Head, M10 X P1.25 X 20L
40	145-7934	1	Pin, 5 X 4.63 X 62L

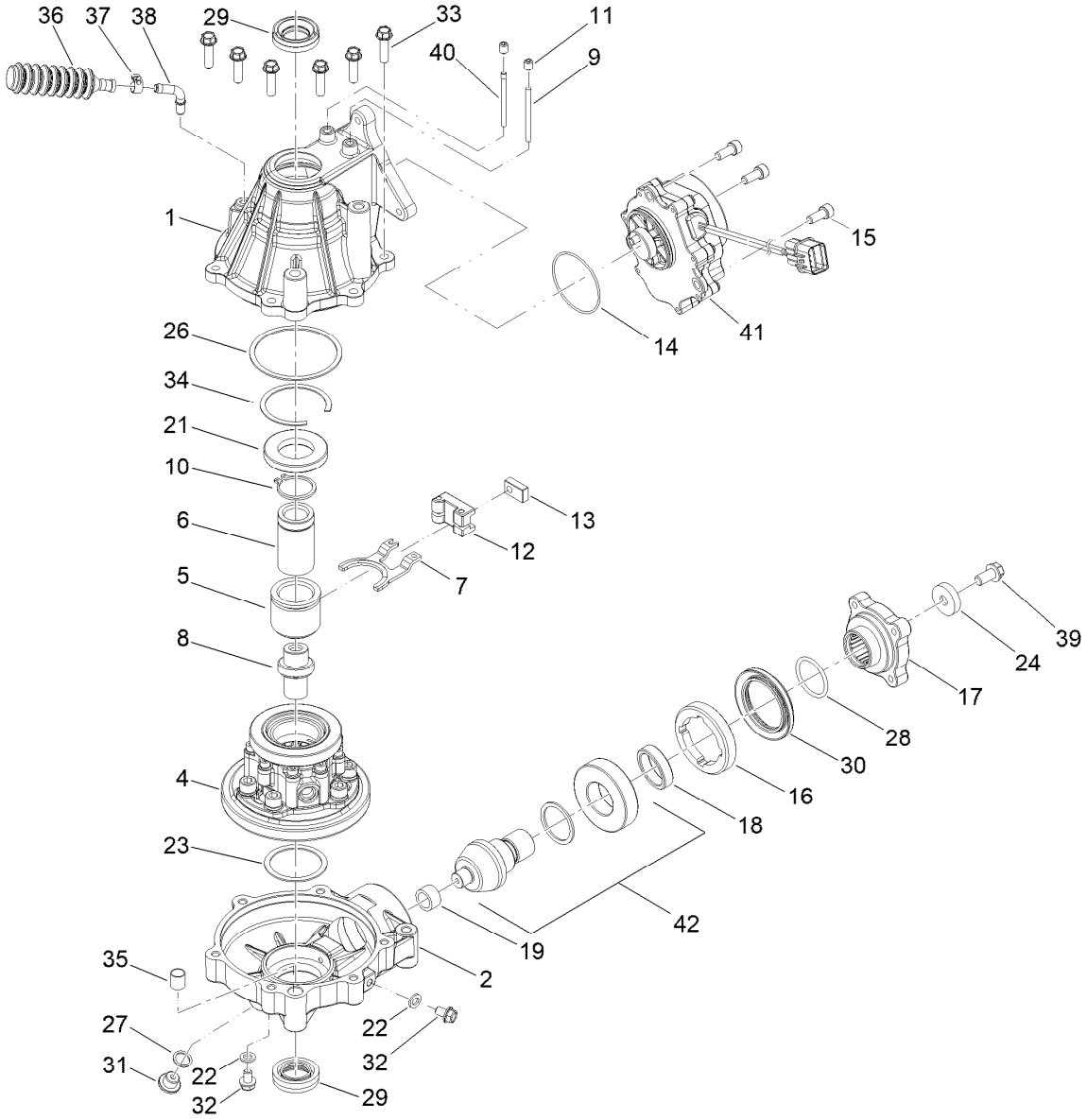

Front Differentail Assembly No. 140-4752 (continued)

Ref.	*Part Number*	*Qty.*	*Description*
41	145-7935	1	Actuator
42	163-4939	1	Pinion Service ASM

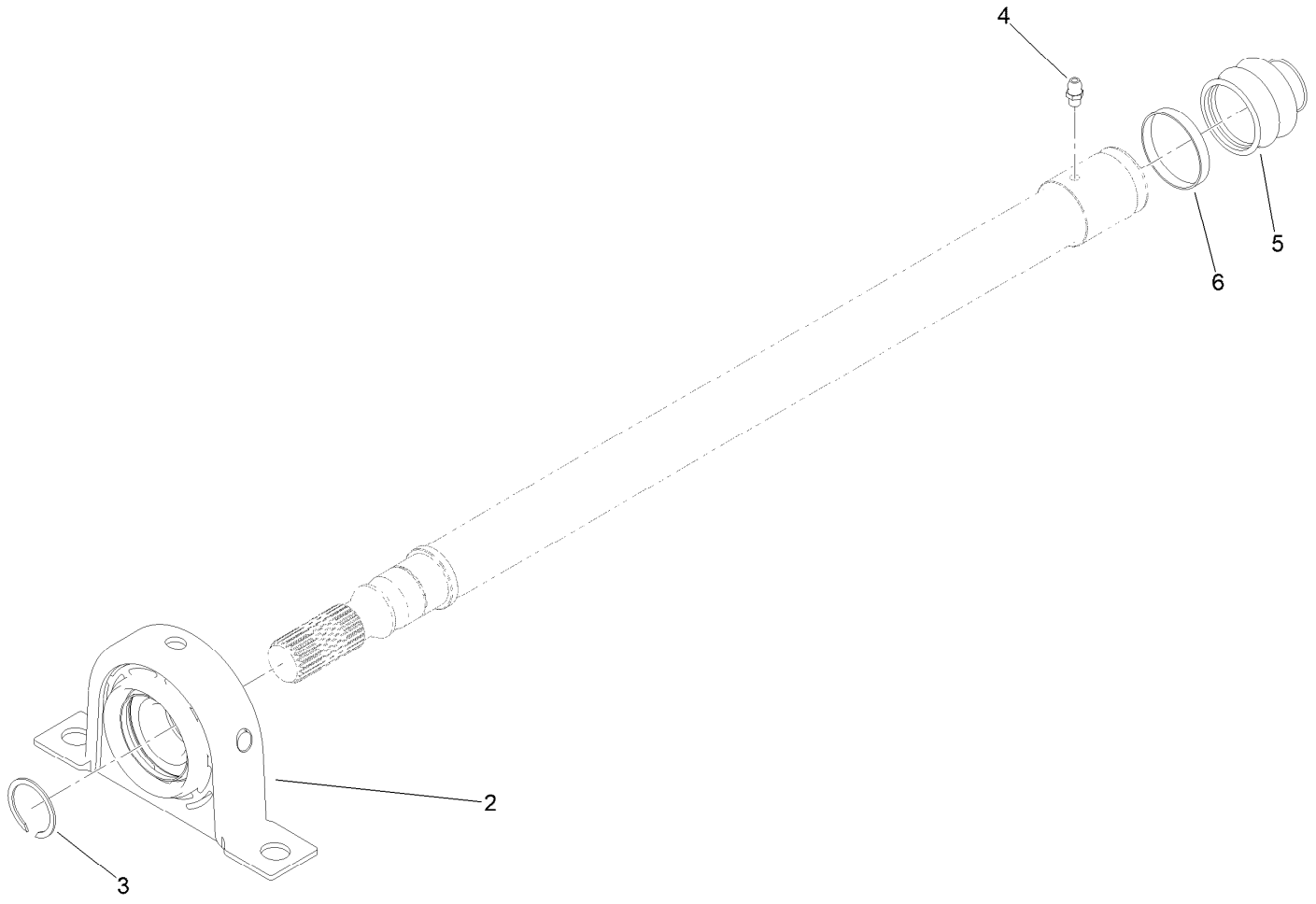

Intermediate Driveshaft Assembly No. 140-4771

Ref.	*Part Number*	*Qty.*	*Description*
2	139-4442	1	Bearing-Hanger
3	144-2208	1	Retainer-Bearing
4	302-5	1	Fitting-Grease
5	140-4772	1	Boot-Joint, Slip
6	140-4760	1	Band

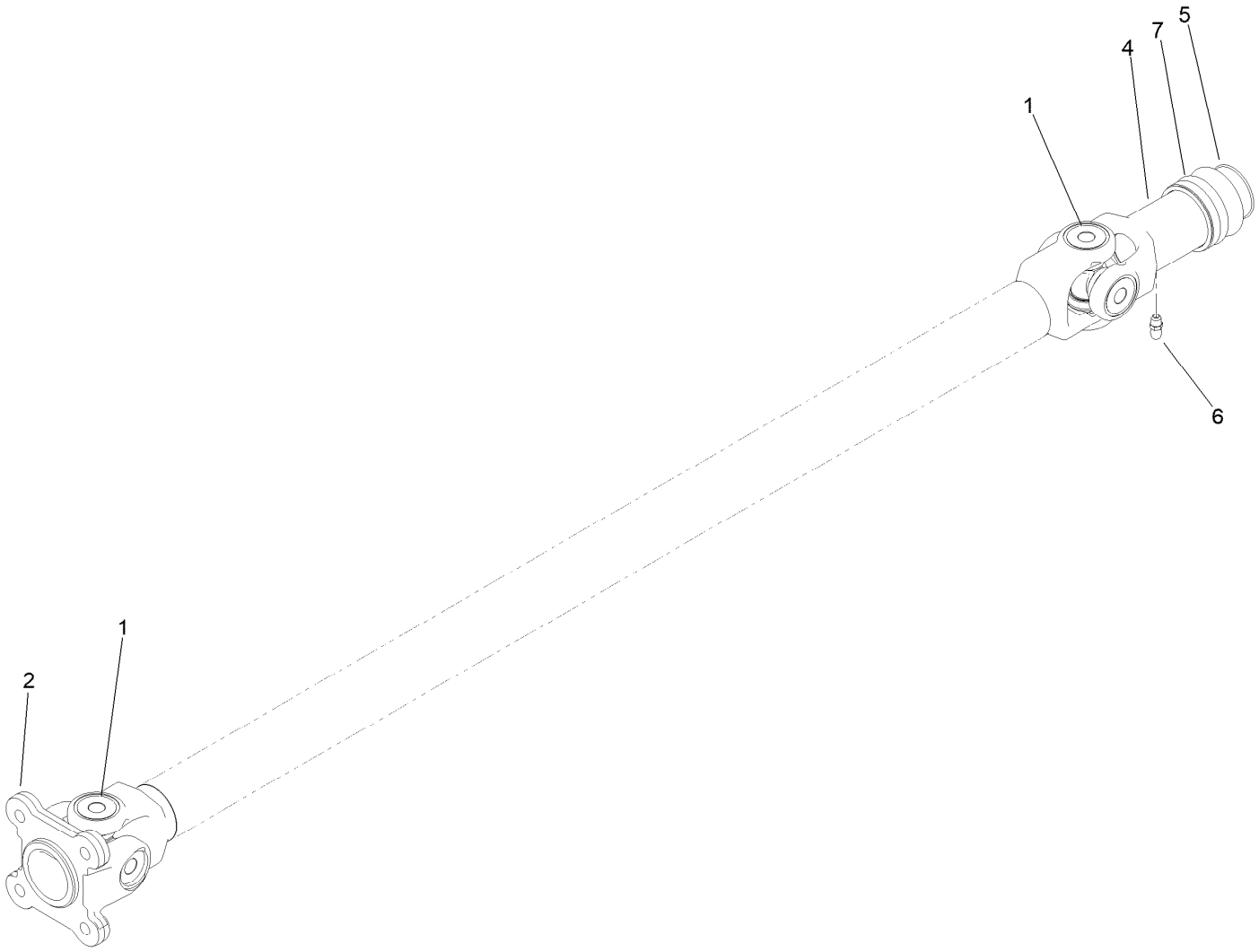

Driveshaft Assembly No. 140-2647

Ref.	*Part Number*	*Qty.*	*Description*
1	138-9162	2	U-Joint Kit
2	138-9178	1	Yoke-Flange
4	140-4753	1	Yoke-Slip, Female
5	140-4754	1	Boot-Joint, Slip
6	110-4755	1	Fitting-Grease
7	140-4760	1	Band

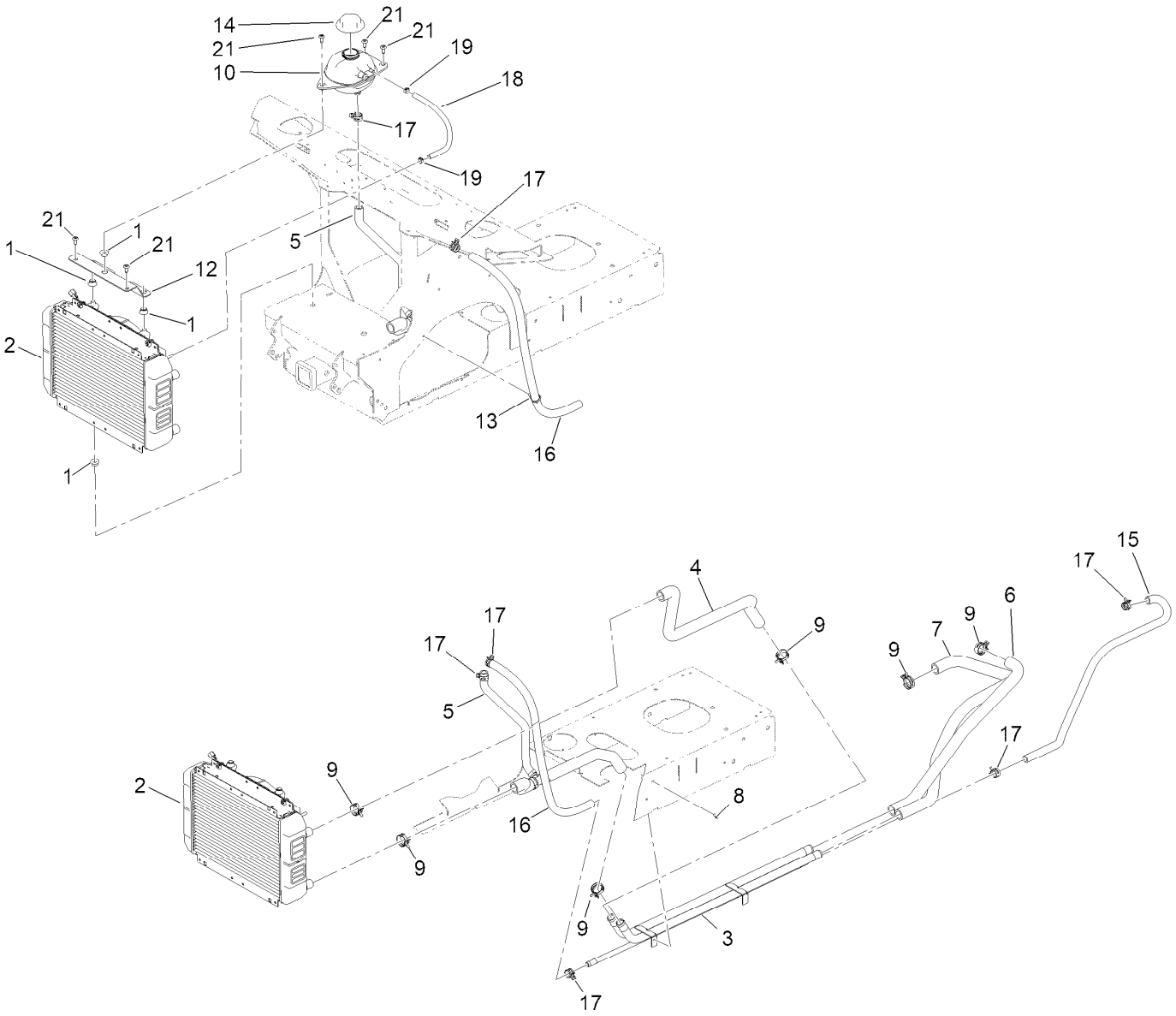

Cooling System Assembly

Ref.	Part Number	Qty.	Description
1	137-6828	4	Bushing-Flange
2	161-5206	1	Radiator ASM
3	137-2681	1	Tube ASM-Coolant
4	140-2628	1	Hose-Radiator, Upper
5	140-4751	1	Hose ASM-Coolant
6	140-2634	1	Hose-Coolant, Upper
7	144-2242	1	Hose-Coolant, Lower
8	32144-4	2	Screw-HWH
9	144-2246	8	Clamp-Sc Band
10	147-8086	1	Coolant Tank ASM

Ref.	Part Number	Qty.	Description
12	147-8056-05	1	Bracket-Mount, Radiator
13	32180-030	2	Clip-Tie
14	161-5218	1	Ratcheting Coolant Cap ASM
15	144-2220	1	Hose-Coolant, Minor
16	140-4757	1	Hose-Coolant
17	144-2248	5	Clamp-Sc Band
18	120-5019	1	Hose-Coolant
19	92-2379	2	Clamp-Hose
21	138-9753	5	Screw

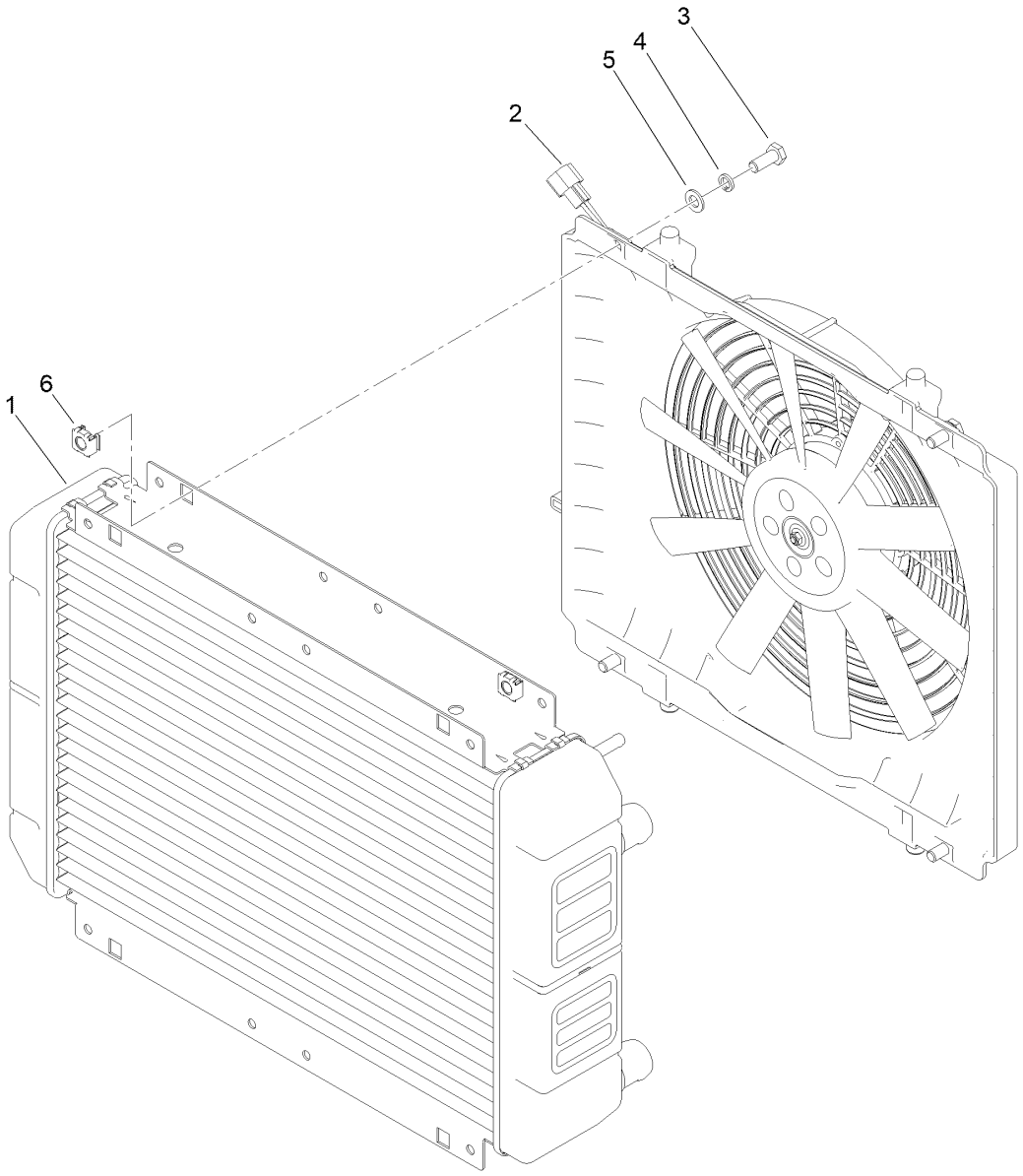

Radiator Assembly No. 161-5206

Ref.	*Part Number*	*Qty.*	*Description*
1	161-5219	1	Radiator
2	161-5239	1	Fan Shroud ASM
3	33114-020	4	Screw-HH
4	03469	4	Washer-Spring
5	115-7370	4	Washer-Plain
6	161-5247	4	Nut-Square, Caged

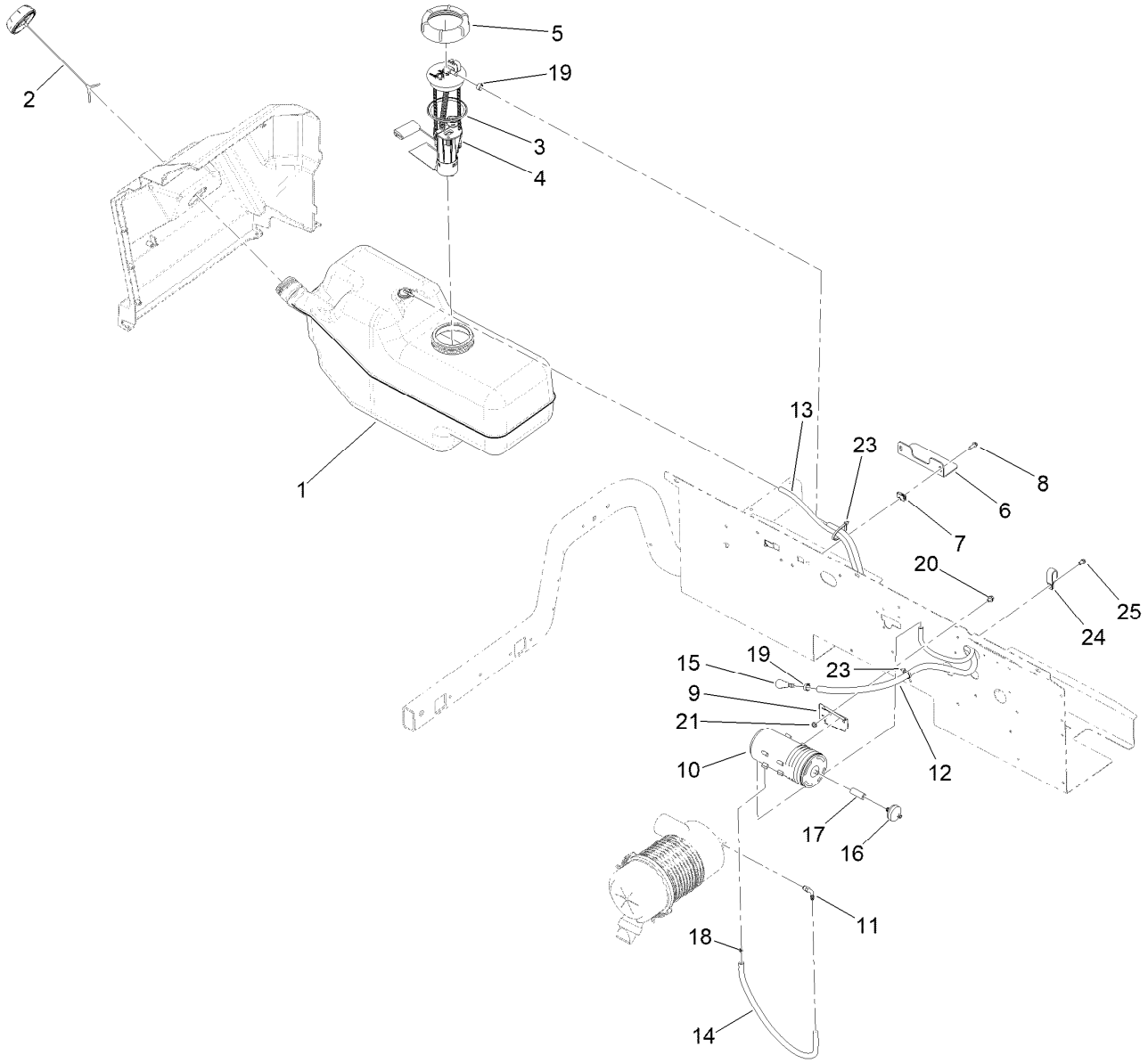

Fuel System Assembly

Ref.	Part Number	Qty.	Description
1	137-2711	1	Fuel Tank ASM (8 Gallon Gas)
2	126-1789	1	Cap-Fuel, Ratcheting
3	138-9333	1	Gasket-Fuel Sender
4	138-9330	1	Fuel Pump ASM
5	138-9332	1	Cap-Fuel Sender
6	163-4937	1	Bracket-Mount, Fuel Tank (Mty)
7	107069	2	Clip
8	49-2040	2	Screw-HWHTF
9	114-0292	1	Bracket-Canister, Carbon
10	117-1221	1	Canister-Carbon, 800Cc
11	94-7222	1	Barb-Hose

Ref.	Part Number	Qty.	Description
12	144-2247	1	Hose-Fuel
13	119-3517	1	Hose-Fuel
14	109-0298	1	Line-Fuel
15	125-2921	1	Fitting-Fuel
16	115-7854	1	Filter-Fuel, Inline
17	106-5317	1	Hose-Fuel
18	120-2038	1	Cartridge-Valve, Check
19	92-2379	2	Clamp-Hose
20	3234-26	2	Screw-HHF
21	3296-56	2	Nut-Lock, NI
23	3290-378	3	Tie-Cable
24	92-5753	2	Clamp-Hose
25	32144-4	2	Screw-HWH

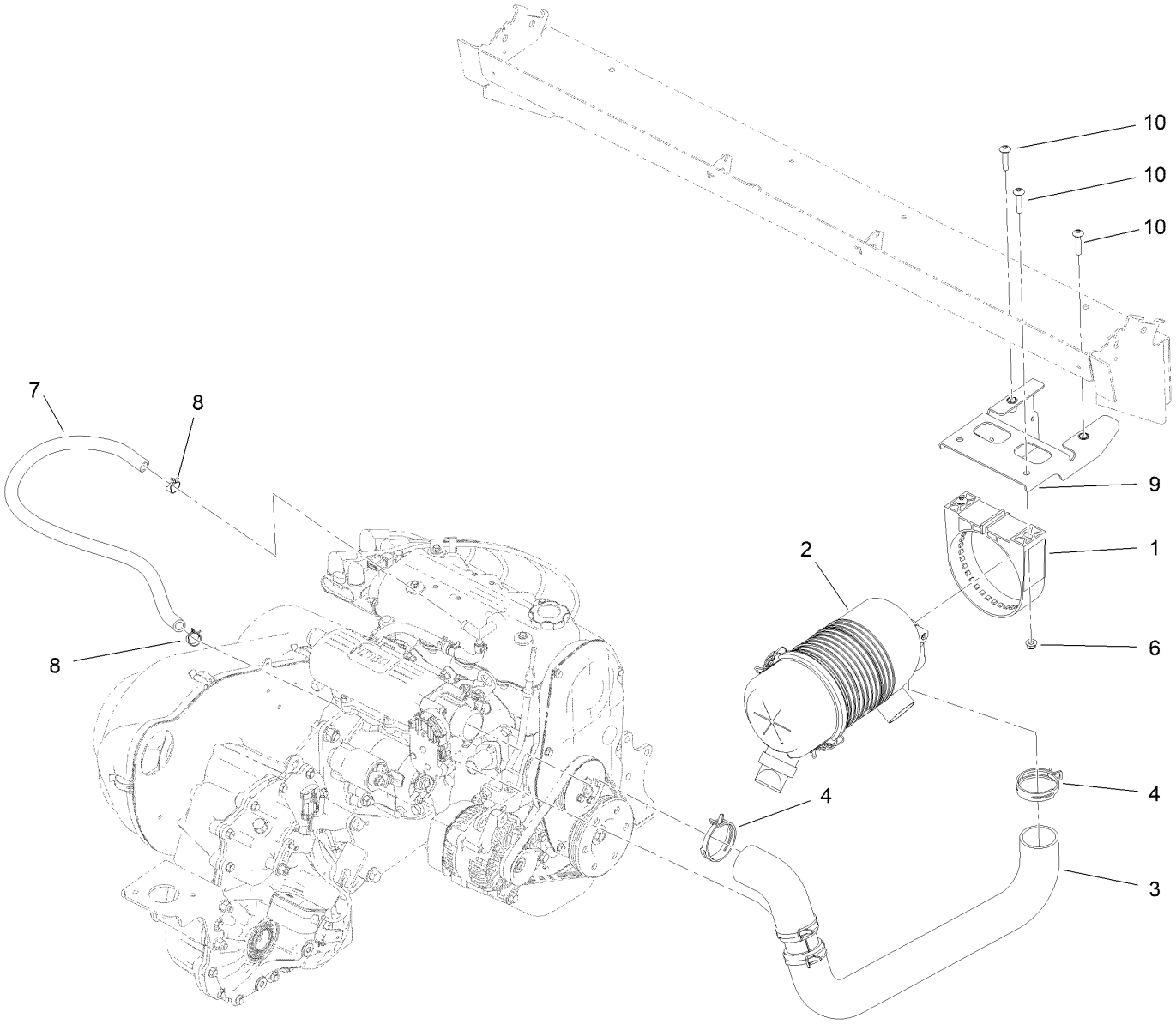

Air Cleaner Assembly

Ref.	*Part Number*	*Qty.*	*Description*
1	98-4525	1	Bracket-Cleaner, Air
2	106-5277	1	Air Cleaner ASM
3	145-2118	1	Hose ASM-Intake
4	144-2200	2	Clamp-Sc Band
6	119-4041	2	Nut-HF
7	127-1777	1	Hose-Fuel
8	2412-143	2	Clamp-Hose
9	147-8105	1	Air Cleaner Bracket ASM
10	126-7439	4	Screw-Torx

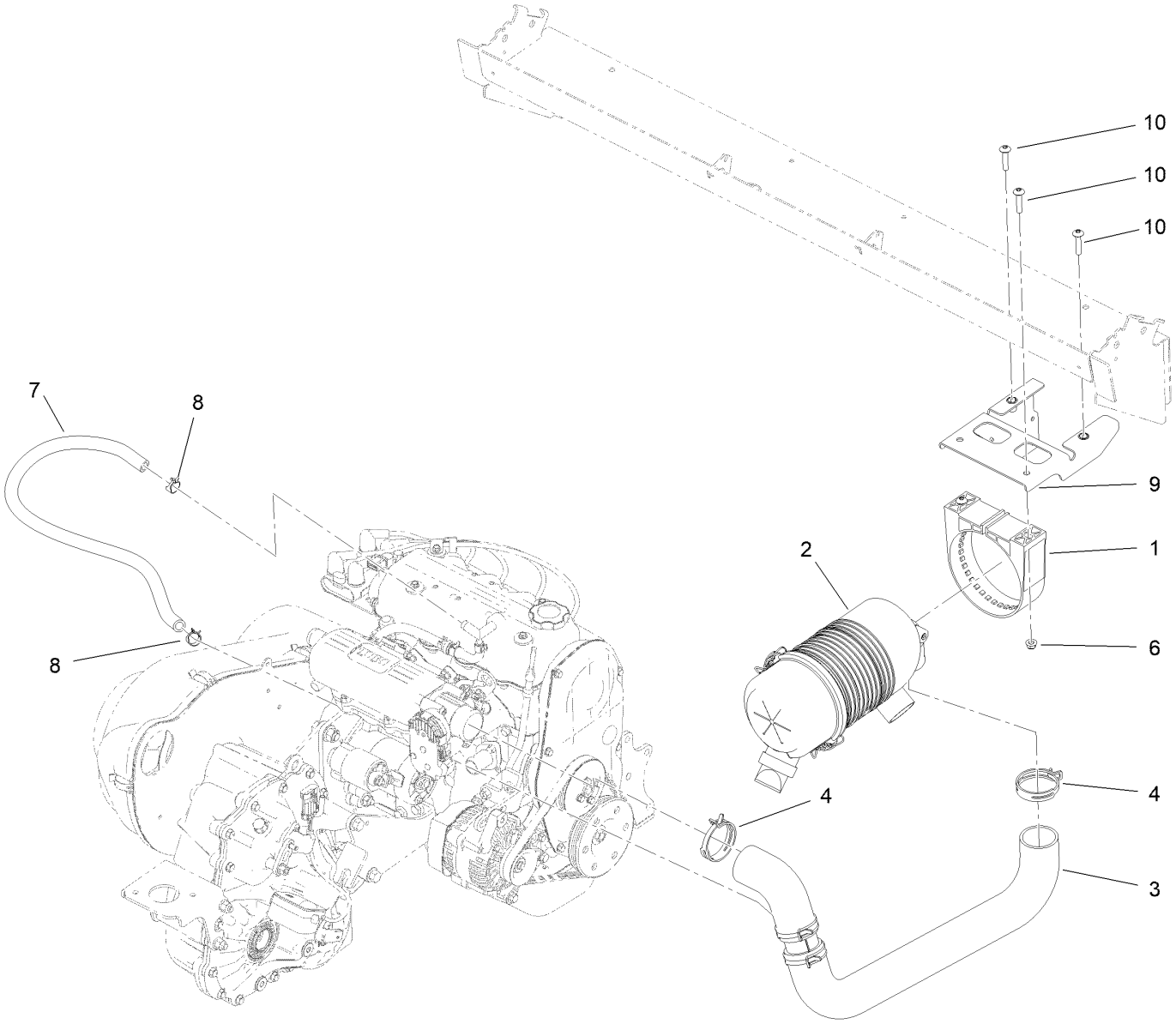

Air Cleaner Assembly (continued)

Air Cleaner Assembly No. 106-5277

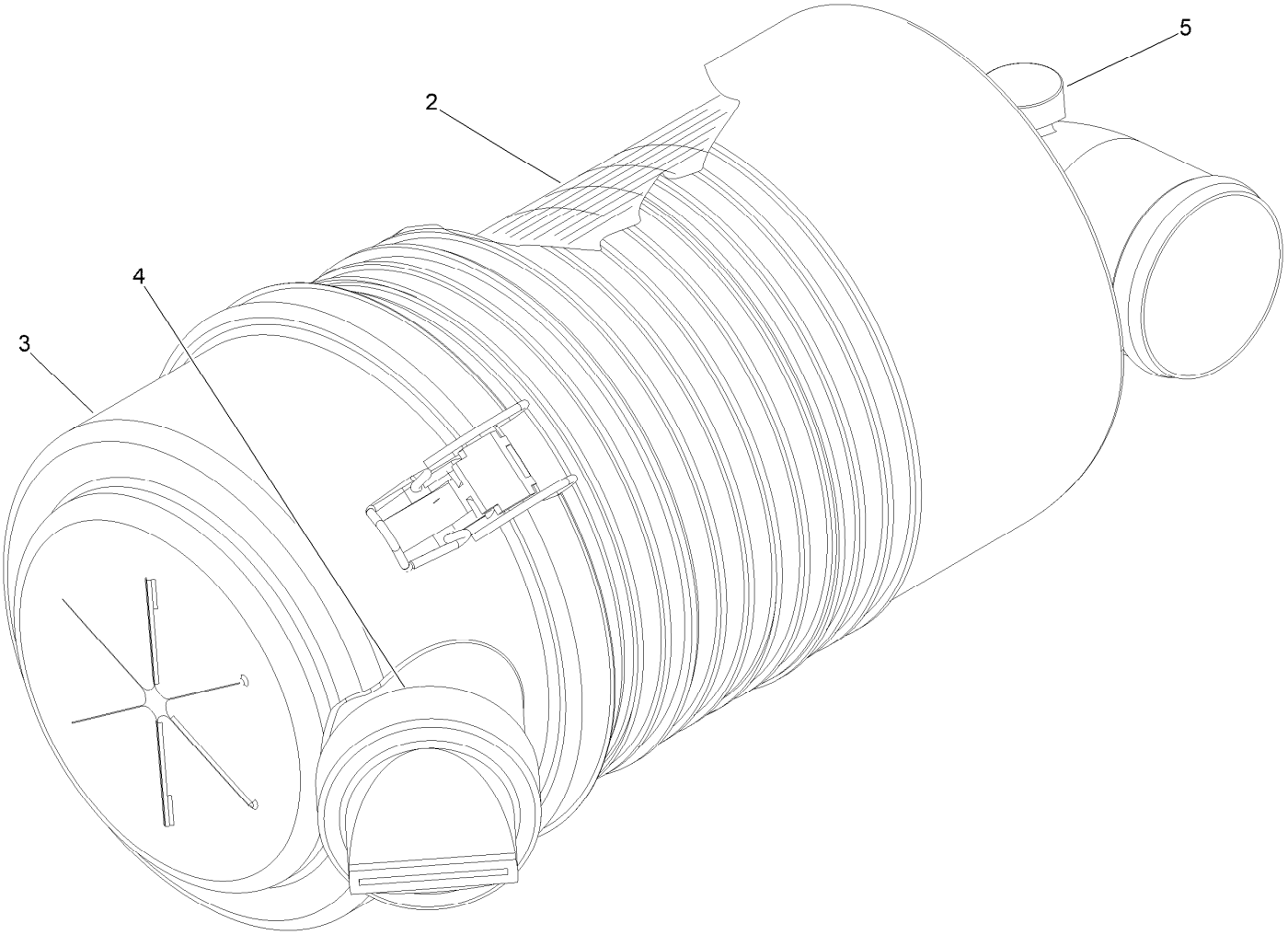

Air Cleaner Assembly No. 106-5277 (continued)

Ref.	Part Number	Qty.	Description
2	108-3810	1	Filter-Air
3	98-9771	1	Cover ASM
4	87-9400	1	Valve-Vacuator
5	285-17	1	Plug-Pipe

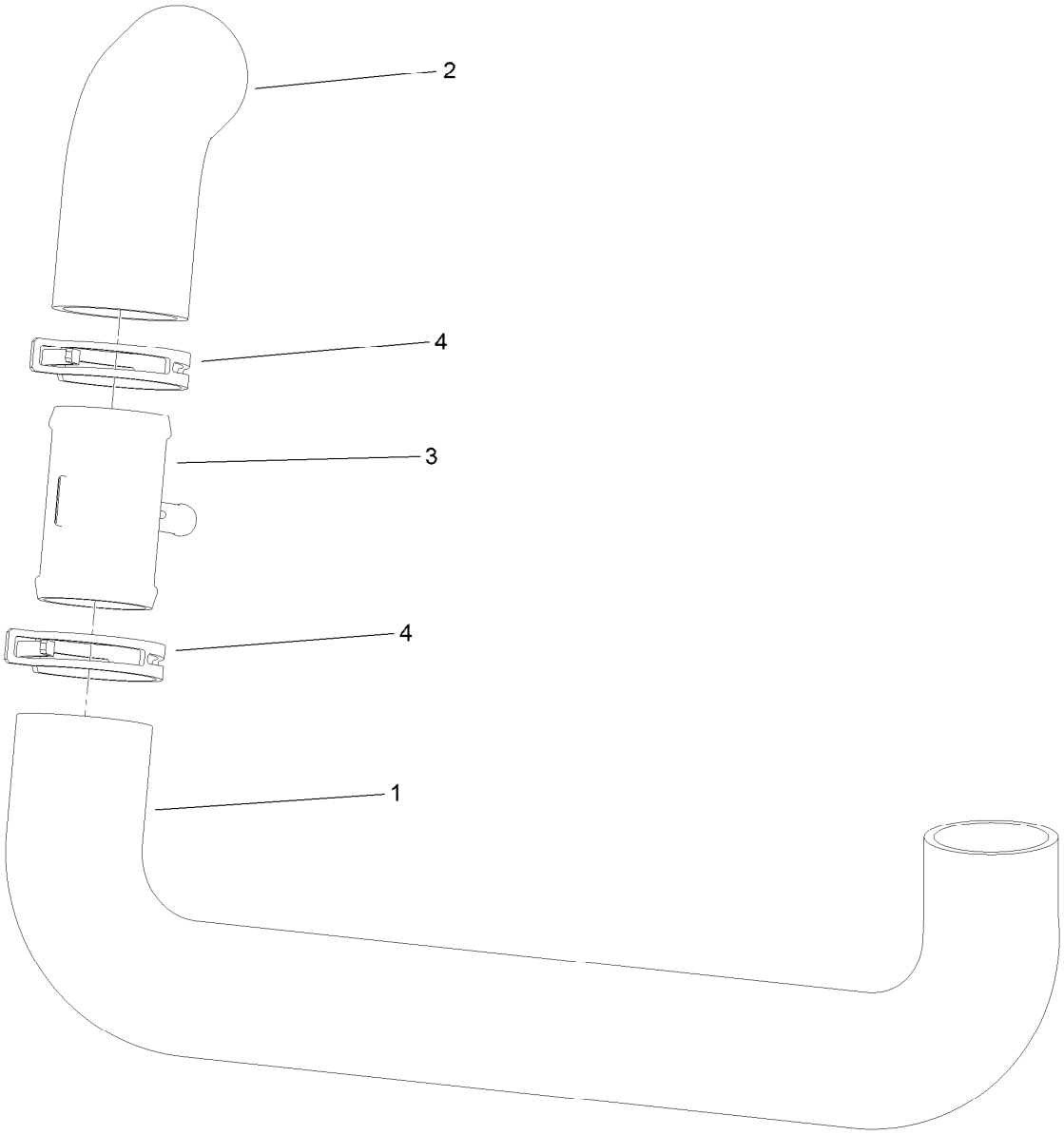

Hose Intake Assembly No. 145-2118

Ref.	*Part Number*	*Qty.*	*Description*
1	145-2116	1	Hose-Air Intake, A
2	145-2117	1	Hose-Air Intake, B
3	145-2112	1	Fitting-Tee
4	144-2200	2	Clamp-Sc Band

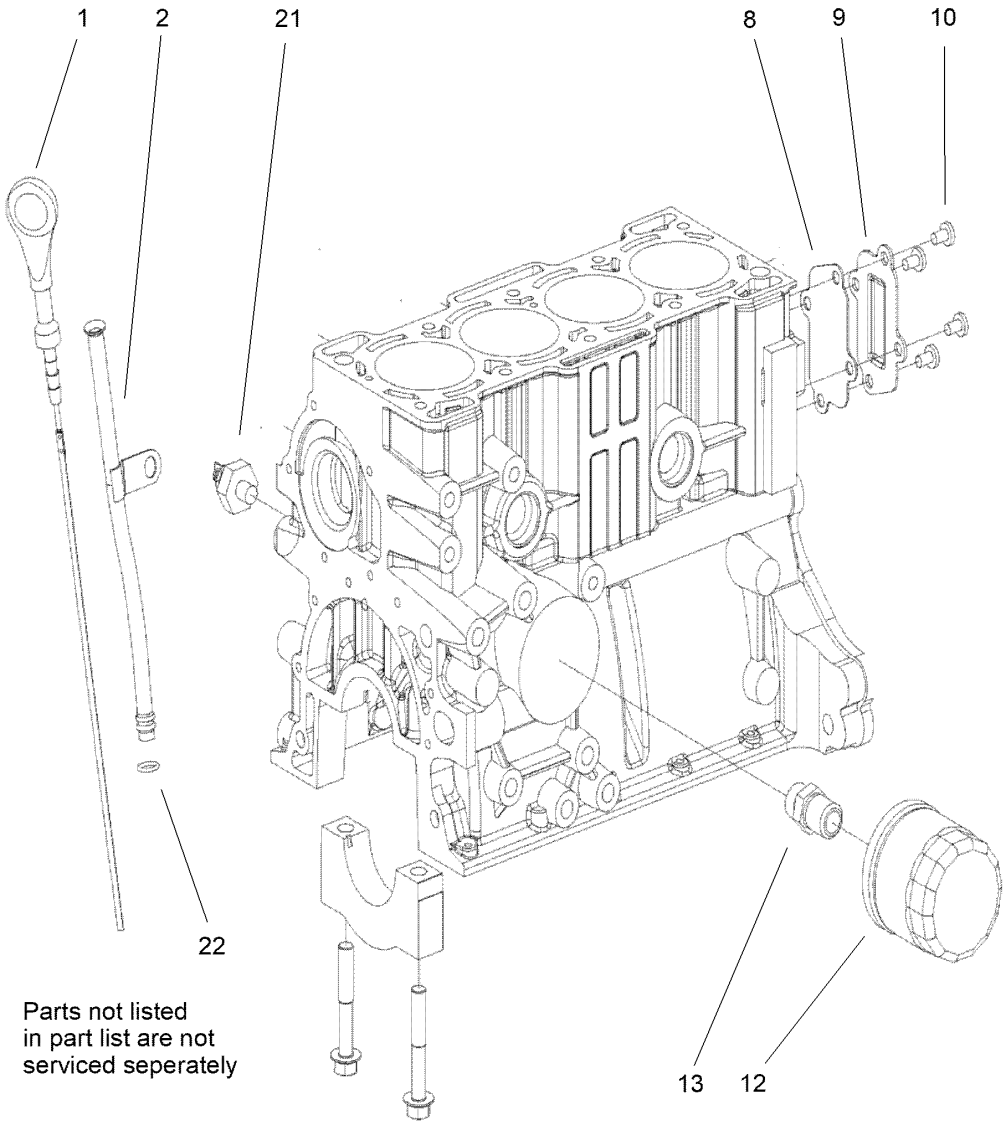

Cylinder Block Assembly

Ref.	*Part Number*	*Qty.*	*Description*
1	145-7937	1	Dip Stick, Oil
2	145-7938	1	Tube, Dipstick
8	145-7939	1	Gasket, Water Sealing Cover
9	145-7940	1	Cover, Water Sealing
10	145-7941	4	Bolt
12	145-7942	1	Filter, Oil
13	145-7943	1	Fitting, Oil Filter
21	145-7944	1	Switch, Oil Pressure
22	145-7945	1	Seal, Dipstick Tube

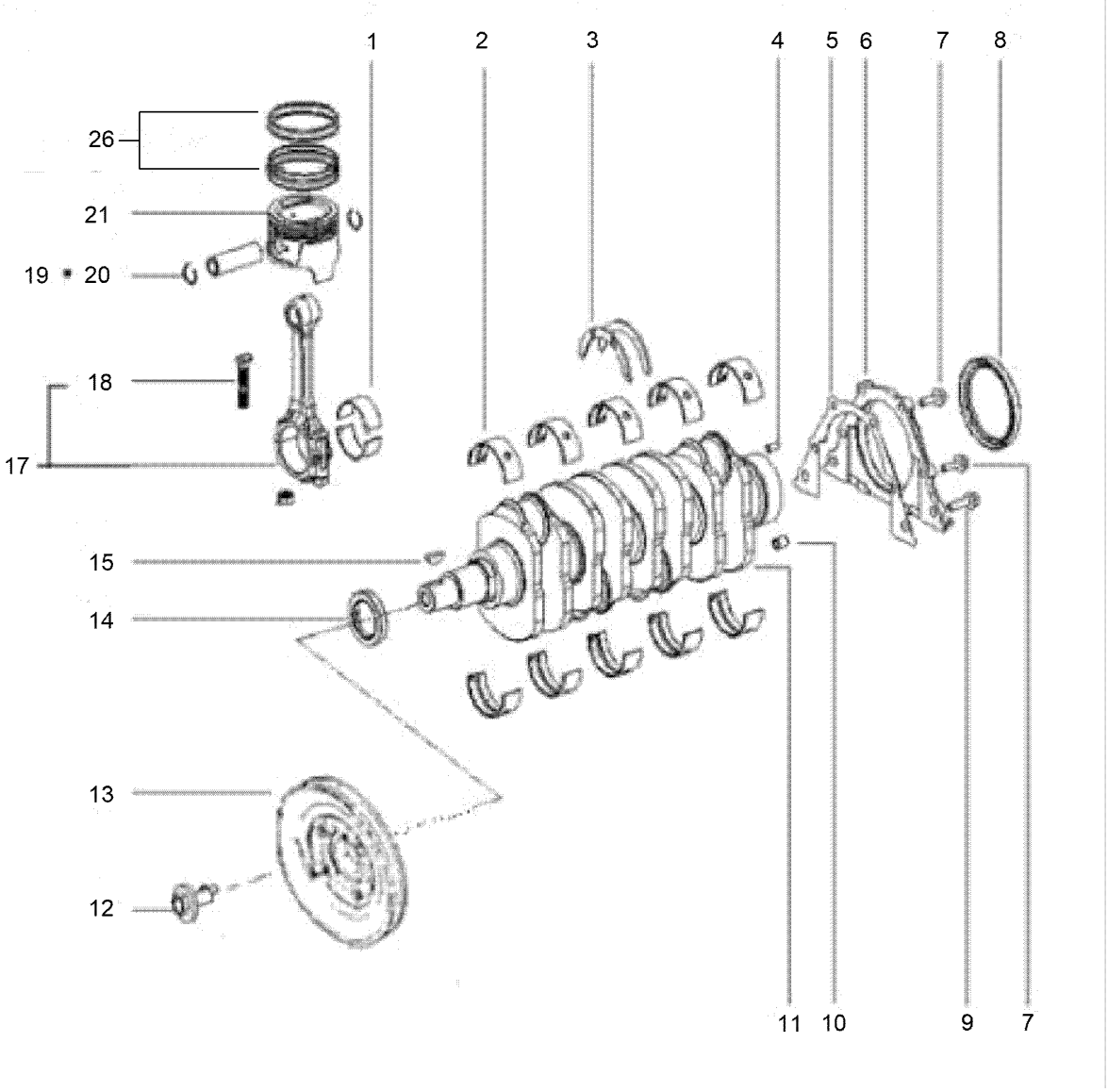

Crankshaft and Piston Assembly

Ref.	Part Number	Qty.	Description
1	145-7947	1	Bearing, Connecting Rod
2	145-7946	1	Bearing, Main (Set Of 10)
3	145-7948	1	Bearing, Thrust
4	145-7949	1	Pin, Locating
5	147-2550	1	Gasket, Oil Seal Housing
6	147-2551	1	Housing, Oil Seal
7	147-2552	4	Bolt, Oil Seal Housing
8	147-2553	1	Seal, Oil (Rear)
9	147-2554	2	Bolt, Oil Seal Housing
10	147-2555	3	Bushing
11	147-2556	1	Crankshaft

Ref.	Part Number	Qty.	Description
12	147-2557	1	Bolt, Crankshaft Pulley
13	147-2558	1	Pulley, Crankshaft
14	147-2559	2	Seal-Oil (Front)
15	147-2560	2	Key, Woodruff
17	147-2561	4	Connecting Rod
18	147-2562	8	Bolt-Rod, Connecting
19	147-2563	8	Clip, Piston Pin
20	147-2564	4	Pin, Piston
21	147-2565	4	Piston
26	147-2566	4	Piston Ring Set - Complete

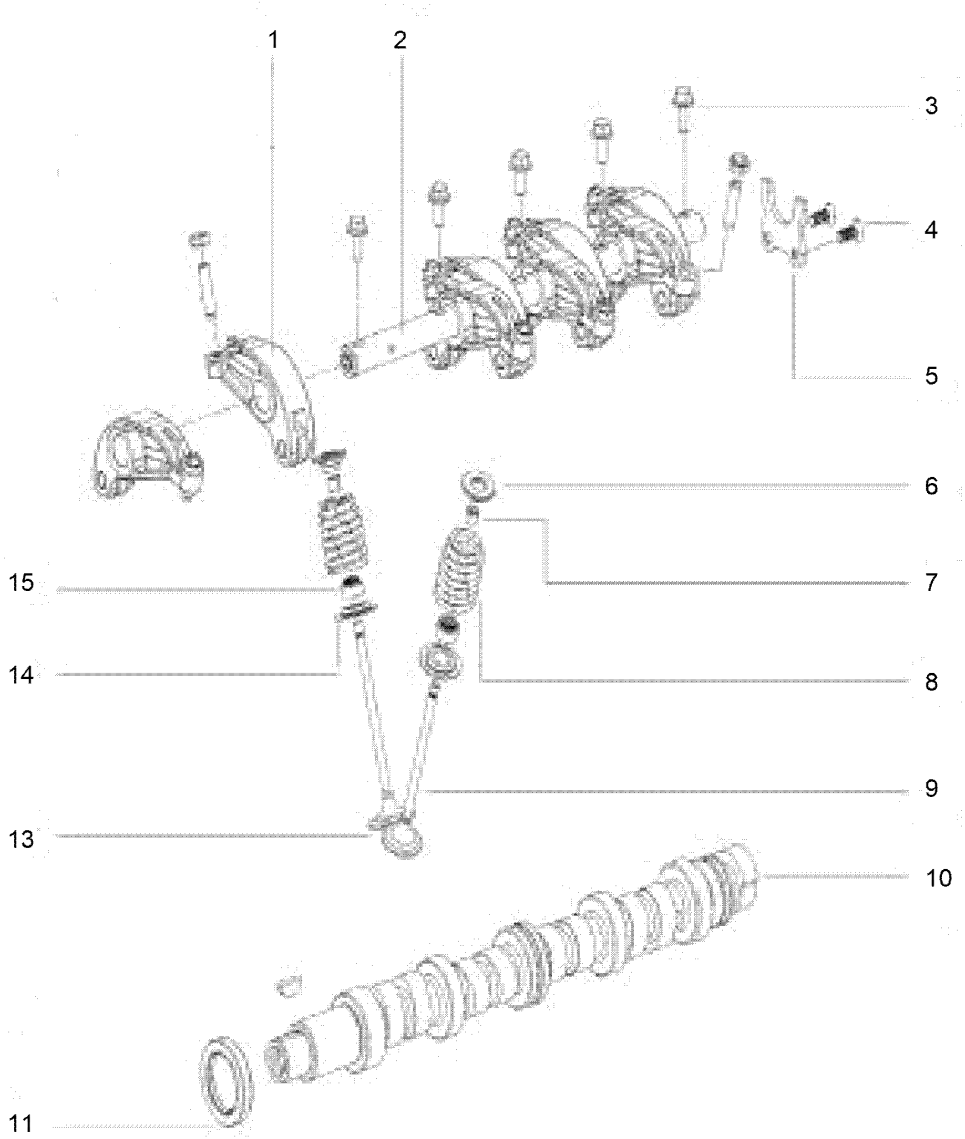

Camshaft and Rocker Arm Assembly

Ref.	*Part Number*	*Qty.*	*Description*
1	147-2567	8	Arm, Rocker
2	147-2568	1	Shaft, Rocker Arm
3	147-2569	5	Bolt
4	147-2570	2	Bolt
5	147-2571	1	Plate, Camshaft Thrust
6	147-2572	8	Seat, Valve Spring
7	147-2573	16	Rotaton, Valve
8	147-2574	8	Valve, Spring
9	147-2575	4	Valve, Exhaust
10	147-2576	1	Camshaft
11	147-2577	1	Seal, Camshaft
13	147-2578	4	Valve, Intake
14	147-2580	8	Seat, Valve Spring
15	147-2579	8	Seal, Valve Stem

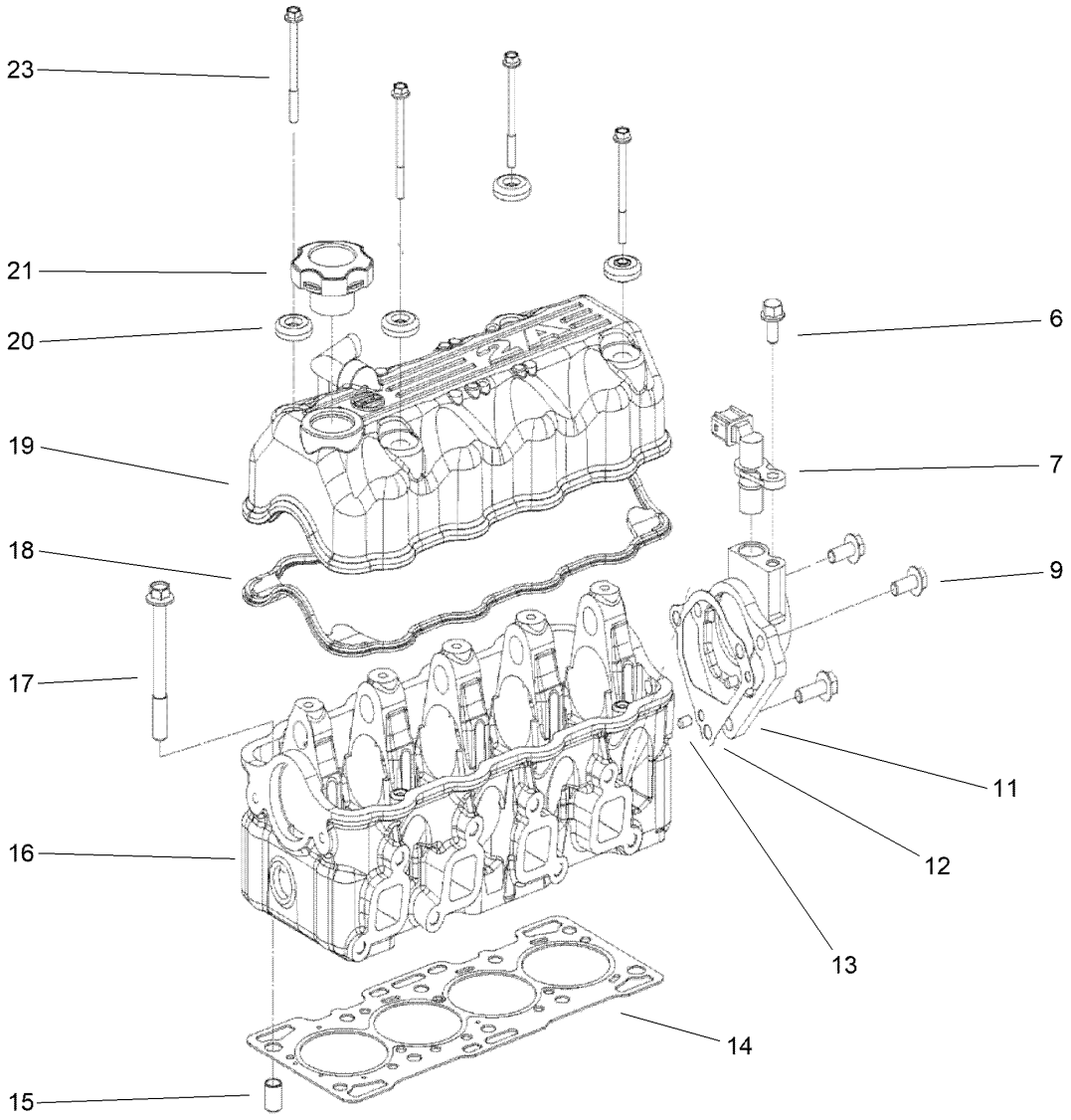

Cylinder Head Assembly

Ref.	*Part Number*	*Qty.*	*Description*
6	147-2581	1	Bolt
7	147-2582	1	Sensor, Camshaft
9	147-2583	4	Bolt, Intake Manifold
11	147-2584	1	Housing, Camshaft Sensor
12	147-2585	1	Gasket, Camshaft Sensor Housing
13	147-2586	2	Pin, Locating
14	147-2587	1	Gasket, Cylinder Head
15	147-2588	4	Pin, Locating
16	147-2589	1	Head, Cylinder
17	147-2590	10	Bolt, Cylinder Head
18	147-2591	1	Gasket, Rocker Cover
19	147-2592	1	Cover, Rocker
20	147-2593	4	Spacer
21	147-2594	1	Cap, Oil
23	147-2595	4	Bolt, Rocker Cover

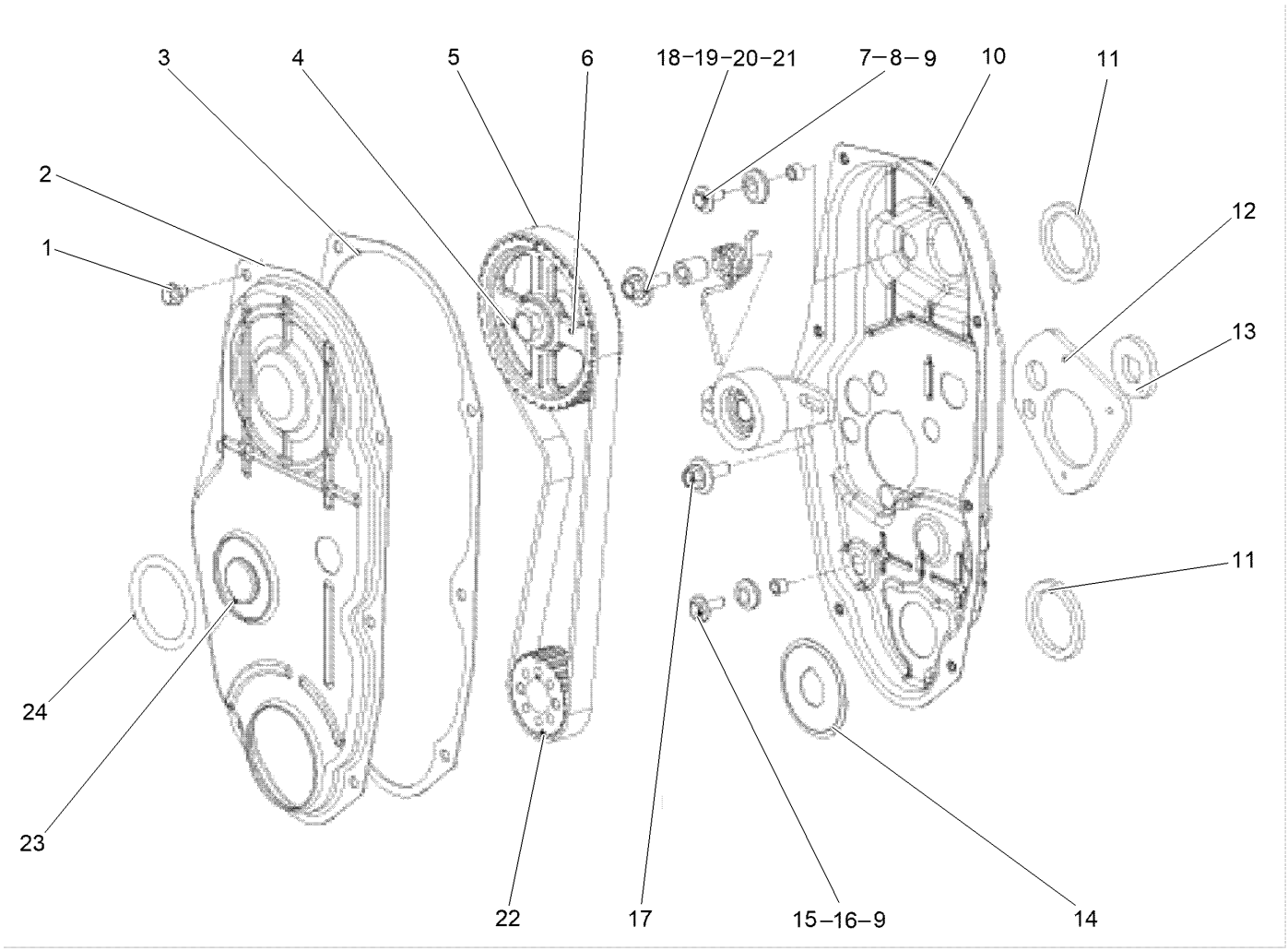

Timing Cover Assembly

Ref.	Part Number	Qty.	Description
1	147-2596	6	Bolt
2	147-2597	1	Front Cover
3	147-2598	1	Gasket, Front Cover
4	147-2599	1	Bolt
5	147-2600	1	Belt, Timing (90 Teeth)
6	147-2601	1	Sprocket, Camshaft
7	147-2602	2	Bolt, Front Cover
8	147-2603	2	Washer
9	147-2604	4	Spacer
10	147-2605	1	Rear Cover
11	147-2606	2	Seal, Oil Cover
12	147-2607	1	Gasket-Cover
13	147-2608	1	Washer

Ref.	Part Number	Qty.	Description
14	147-2609	1	Cover
15	147-2610	2	Bolt, Front Cover
16	147-2611	2	Gasket, Rear Cover
17	147-2612	1	Bolt-Tensioner (Incls Washer)
18	147-2613	1	Bolt, Tensioner
19	147-2614	1	Bushing, Torsion Spring
20	147-2615	1	Spring, Torsion
21	147-2616	1	Tensioner
22	147-2617	1	Sprocket, Crankshaft
23	147-2618	1	Cover
24	147-2619	1	Seal, Front Cover

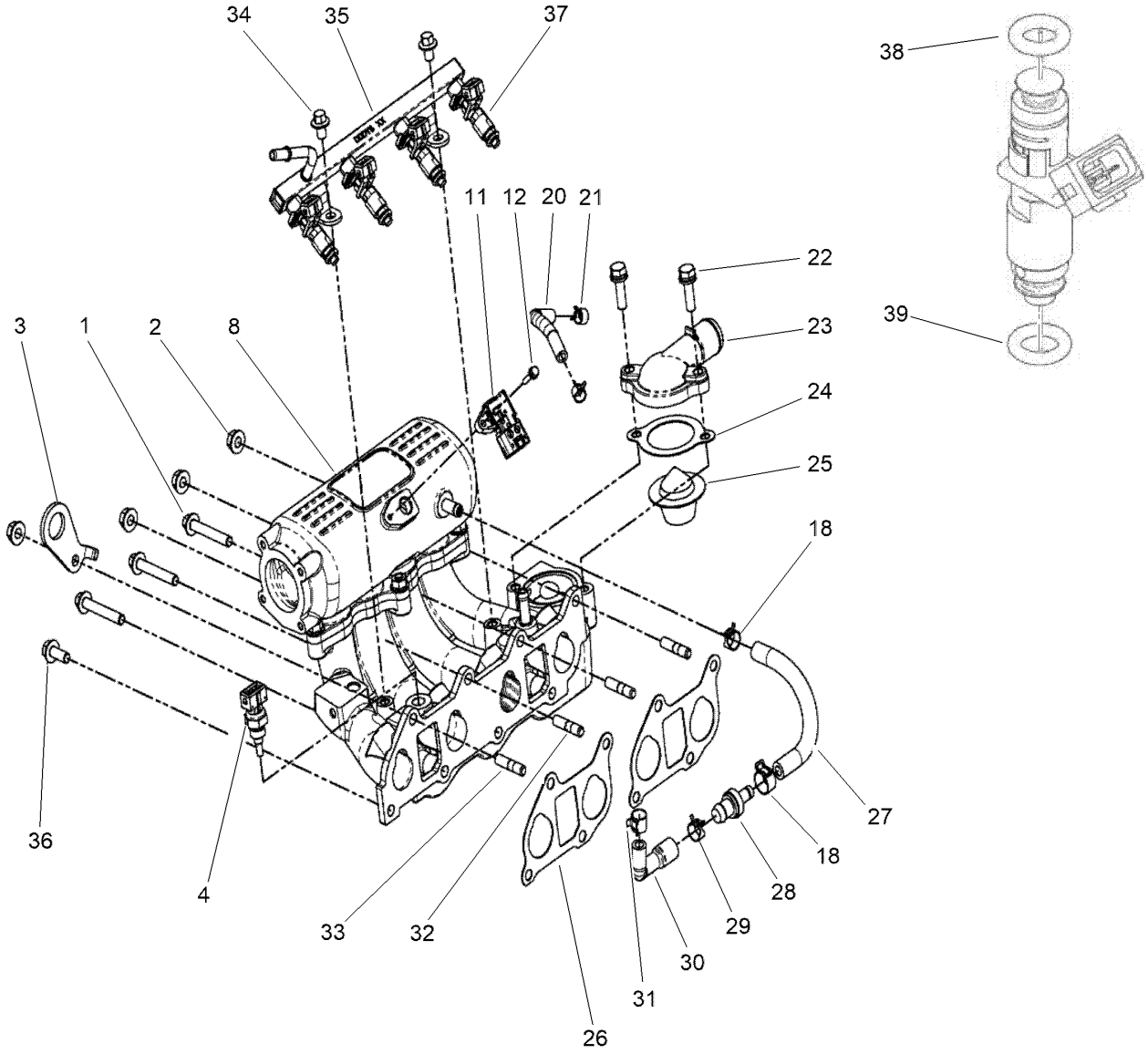

Intake Manifold Assembly

Ref.	Part Number	Qty.	Description
1	147-2620	3	Bolt, Intake Manifold
2	147-2621	4	Nut, Intake Manifold
3	147-2622	1	Lifting Eye
4	147-2623	1	Sensor, Water Temp
8	147-2624	1	Manifold, Intake
11	147-2625	1	Sensor, Air
12	147-2626	1	Bolt
18	147-2627	2	Clamp
20	147-2628	1	Hose, Coolant
21	147-2629	2	Clamp
22	147-2630	2	Bolt
23	147-2631	1	Outlet, Water
24	147-2632	1	Gasket, Thermostat Cover
25	147-2633	1	Thermostat

Ref.	Part Number	Qty.	Description
26	147-2634	2	Gasket, Intake Manifold
27	147-2635	1	Hose, Pvc Vent
28	147-2636	1	Pcv
29	147-2637	1	Clamp
30	147-2638	1	Hose, Pcv
31	147-2639	1	Clamp
32	147-2640	3	Stud, Intake Manifold
33	147-2641	1	Stud, Exhaust Manifold
34	147-2642	2	Bolt, Fuel Rail
35	147-2643	1	Rail, Fuel
36	147-2583	1	Bolt, Intake Manifold
37	145-7936	4	Injector W/Clip
38	163-5077	4	O-Ring
39	163-5078	4	O-Ring

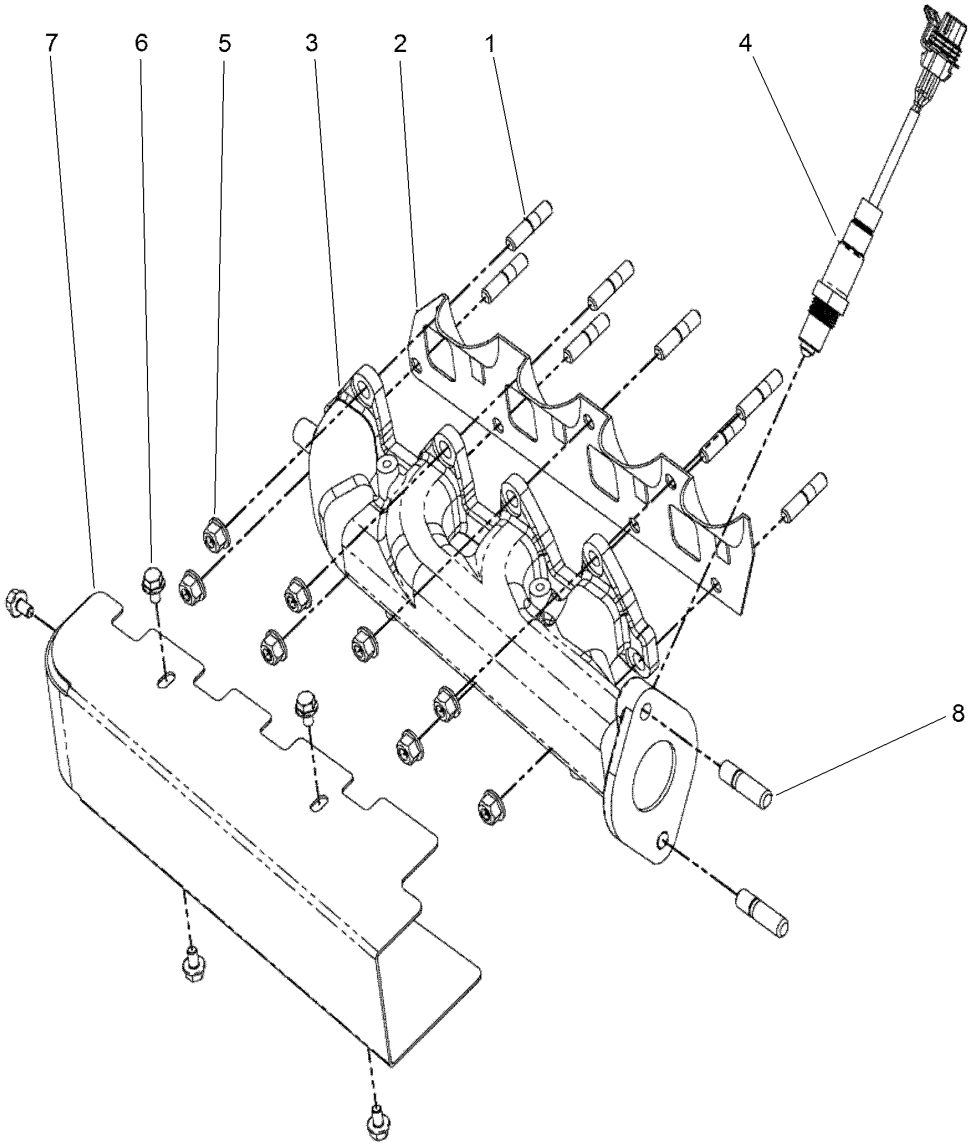

Exhaust Manifold Assembly

Ref.	*Part Number*	*Qty.*	*Description*
1	147-2644	8	Stud
2	147-2645	1	Gasket, Exhaust Manifold
3	147-2646	1	Manifold, Exhaust
4	147-2647	1	Sensor, O2
5	147-2648	8	Nut
6	147-2649	5	Screw
7	147-2650	1	Shield, Exhaust
8	147-2651	2	Stud

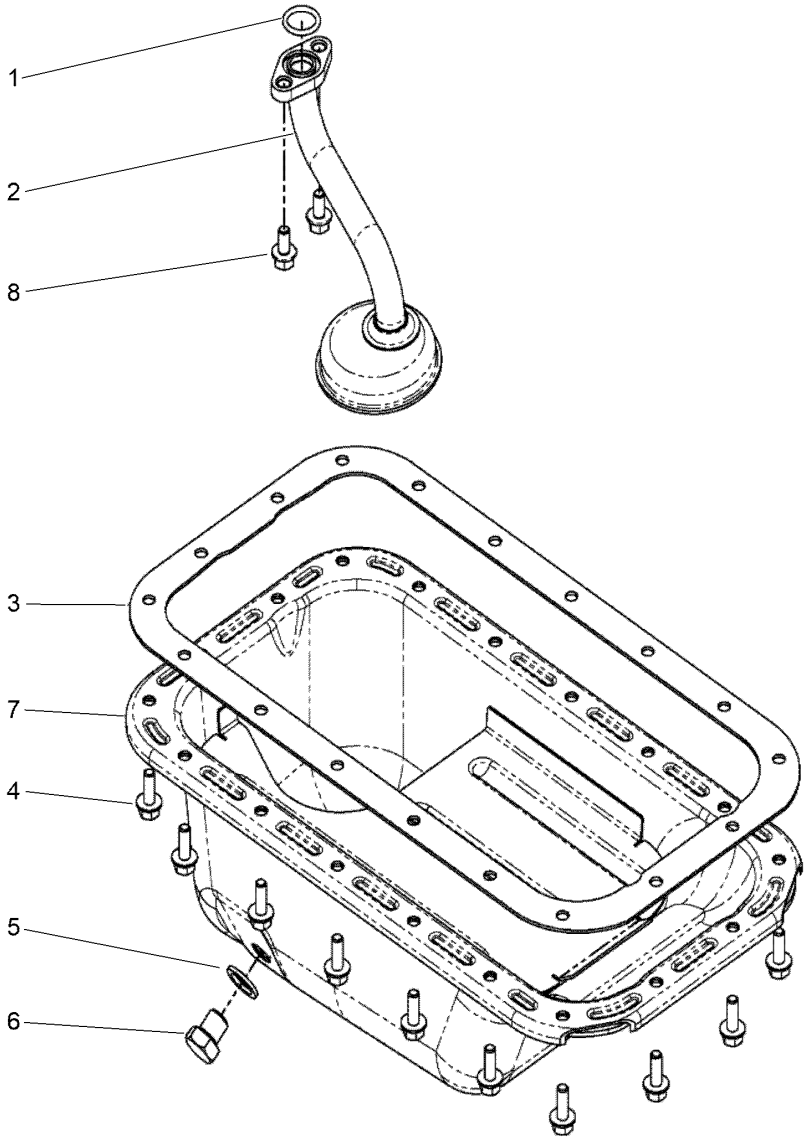

Oil Pan Assembly

Ref.	*Part Number*	*Qty.*	*Description*
1	147-2652	1	Seal, Oil Strainer
2	147-2653	1	Tube, Oil Pick Up
3	147-2654	1	Gasket, Oil Pan
4	147-2569	18	Bolt
5	147-2655	1	Seal, Drain Plug
6	147-2656	1	Plug, Drain
7	147-2657	1	Pan, Oil
8	147-2658	2	Bolt

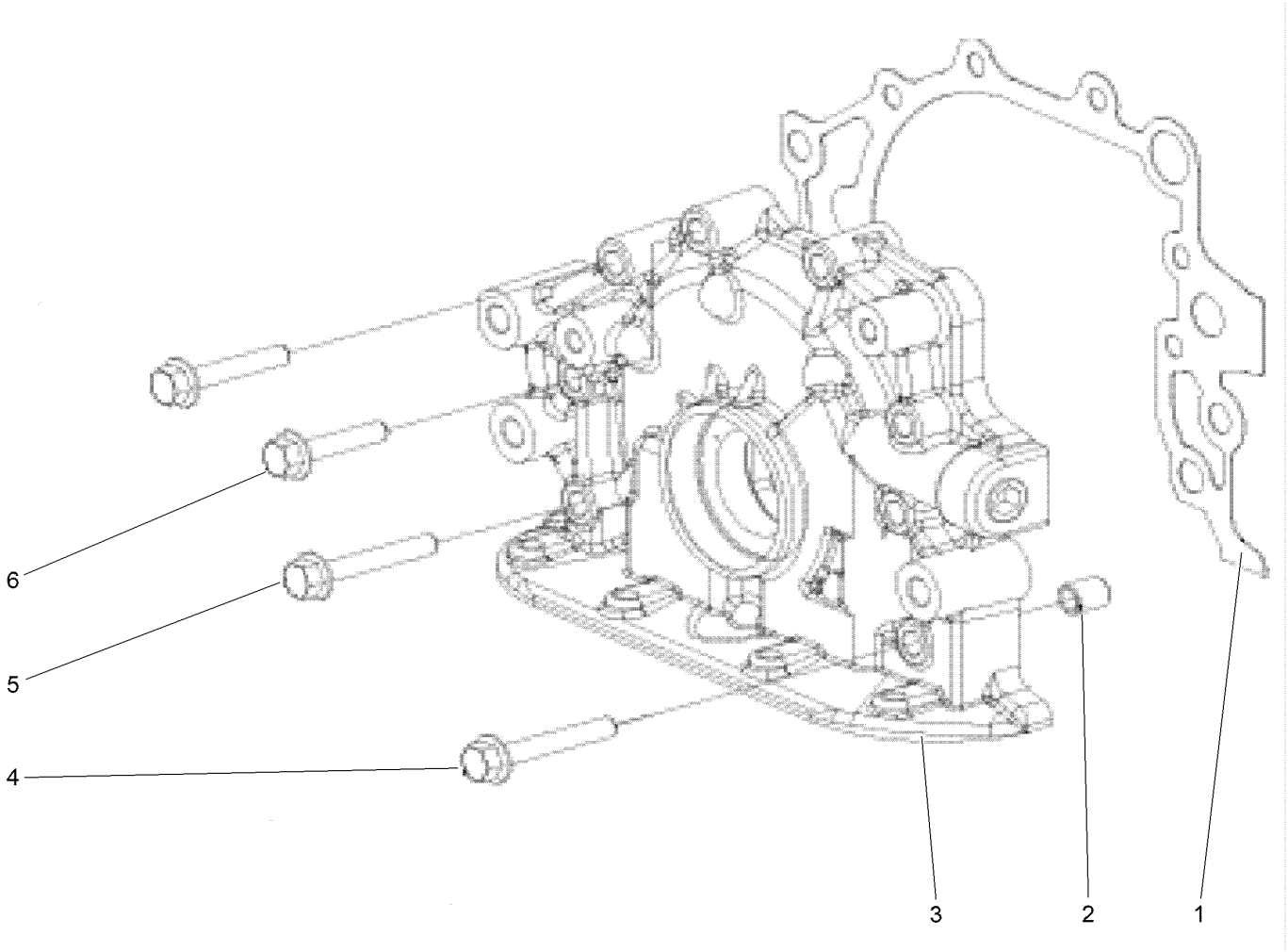

Oil Pump Assembly

Ref.	*Part Number*	*Qty.*	*Description*
1	147-2659	1	Gasket, Oil Pump
2	147-2555	4	Bushing
3	147-2660	1	Pump, Oil
4	147-2661	3	Bolt
5	147-2662	3	Bolt
6	147-2663	5	Bolt, Oil Pump

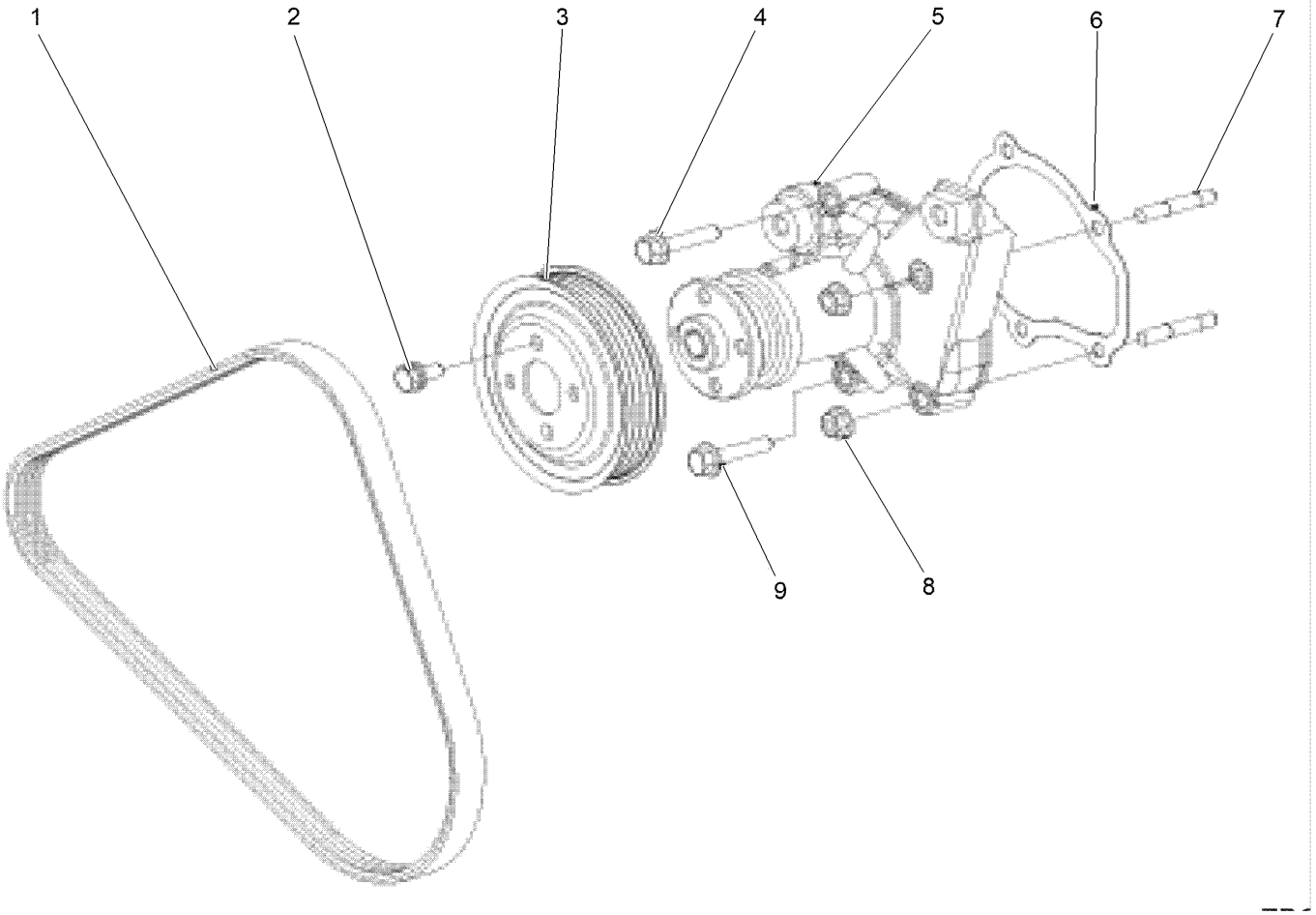

Water Pump Assembly

Ref.	*Part Number*	*Qty.*	*Description*
1	147-2664	1	Belt
2	147-2665	4	Bolt
3	147-2666	1	Pulley, Water Pump
4	147-2661	1	Bolt
5	147-2667	1	Pump, Water
6	147-2668	1	Gasket, Water Pump
7	147-2669	2	Stud, Water Pump
8	147-2670	2	Nut
9	147-2662	1	Bolt

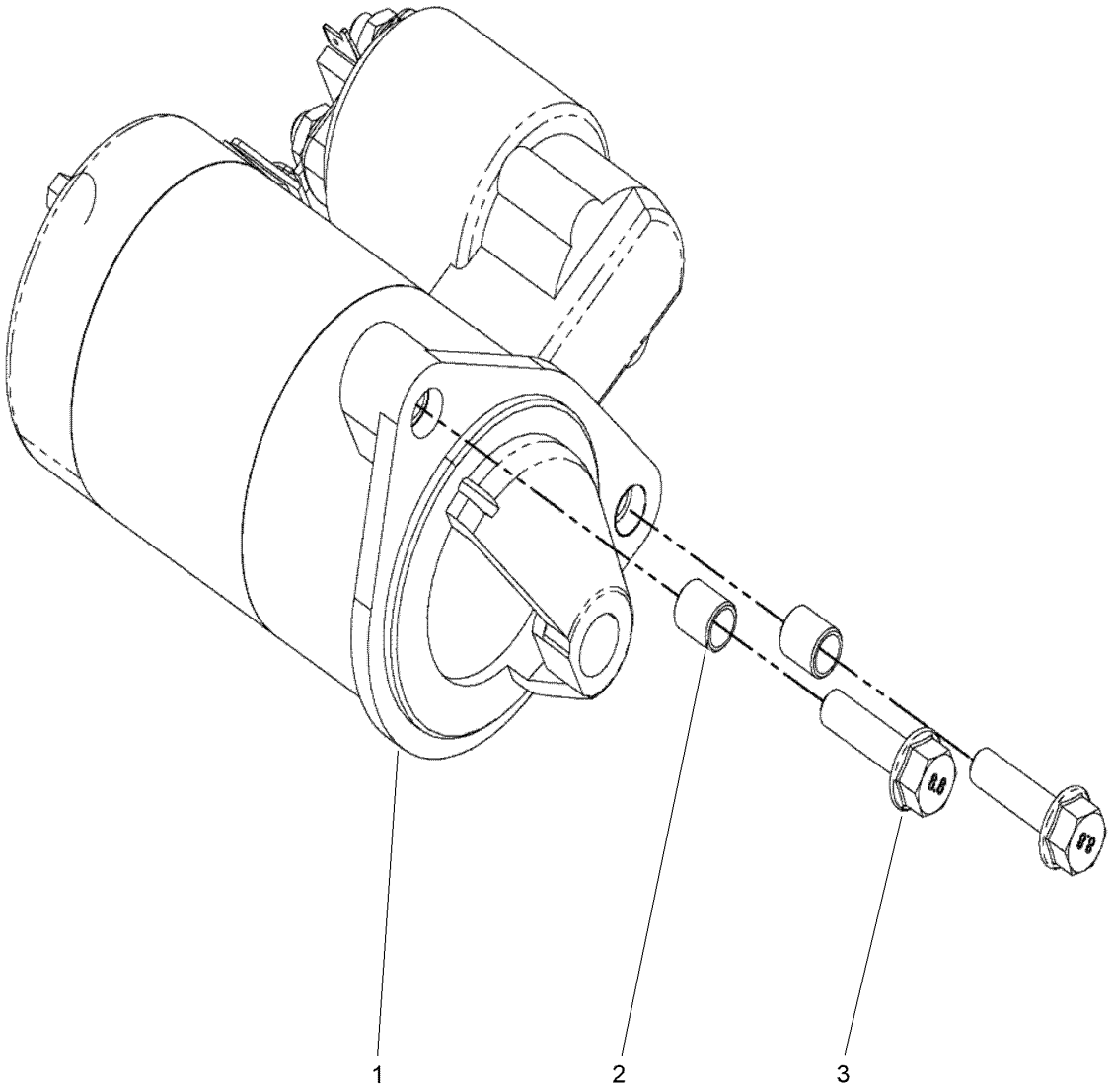

Starter Assembly

Ref.	*Part Number*	*Qty.*	*Description*
1	147-2671	1	Starter
2	147-2672	2	Dowel
3	147-2673	2	Bolt

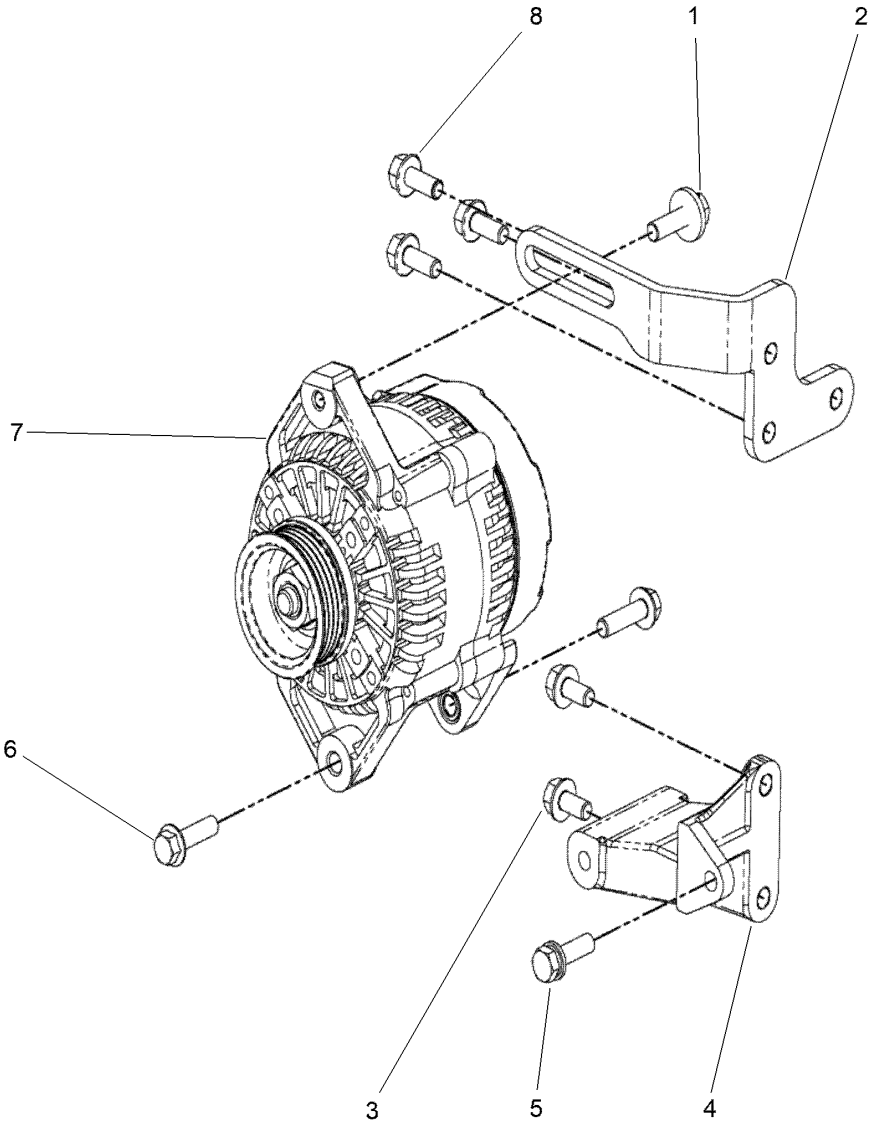

Alternator Assembly

Ref.	*Part Number*	*Qty.*	*Description*
1	147-2674	1	Bolt, Alternator
2	147-2675	1	Bracket, Alternator
3	147-2676	2	Bolt, Alt Support
4	147-2677	1	Support, Alternator
5	147-2678	1	Bolt, Alt Support
6	147-2679	1	Bolt
7	147-2680	1	Alternator
8	147-2681	3	Bolt

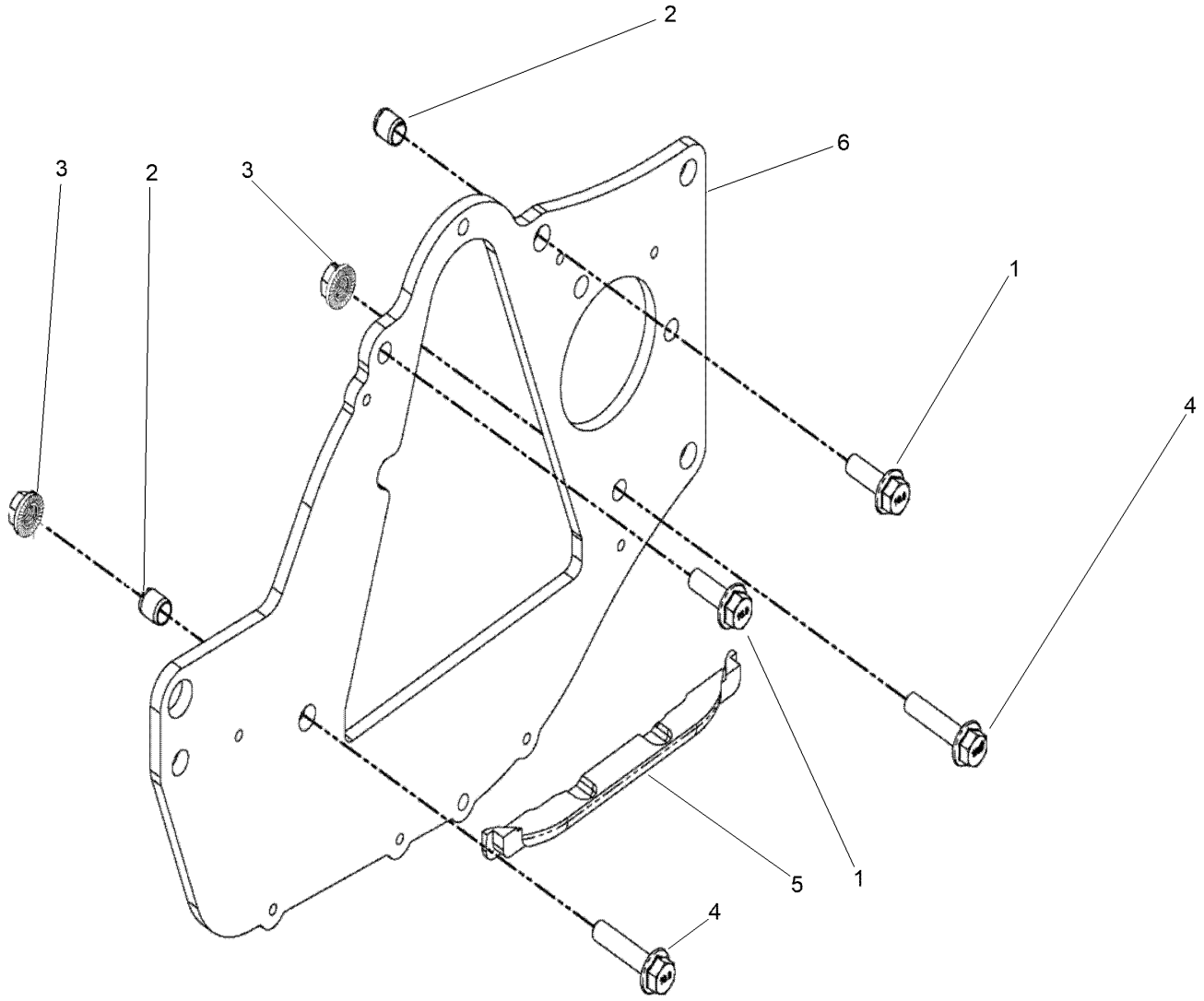

Rear Plate Assembly

Ref.	*Part Number*	*Qty.*	*Description*
1	147-2682	2	Bolt
2	147-2683	2	Spacer
3	147-2684	2	Nut
4	147-2685	2	Bolt
5	145-2003	1	Seal-Plate, Rear
6	144-2201	1	Plate-Engine

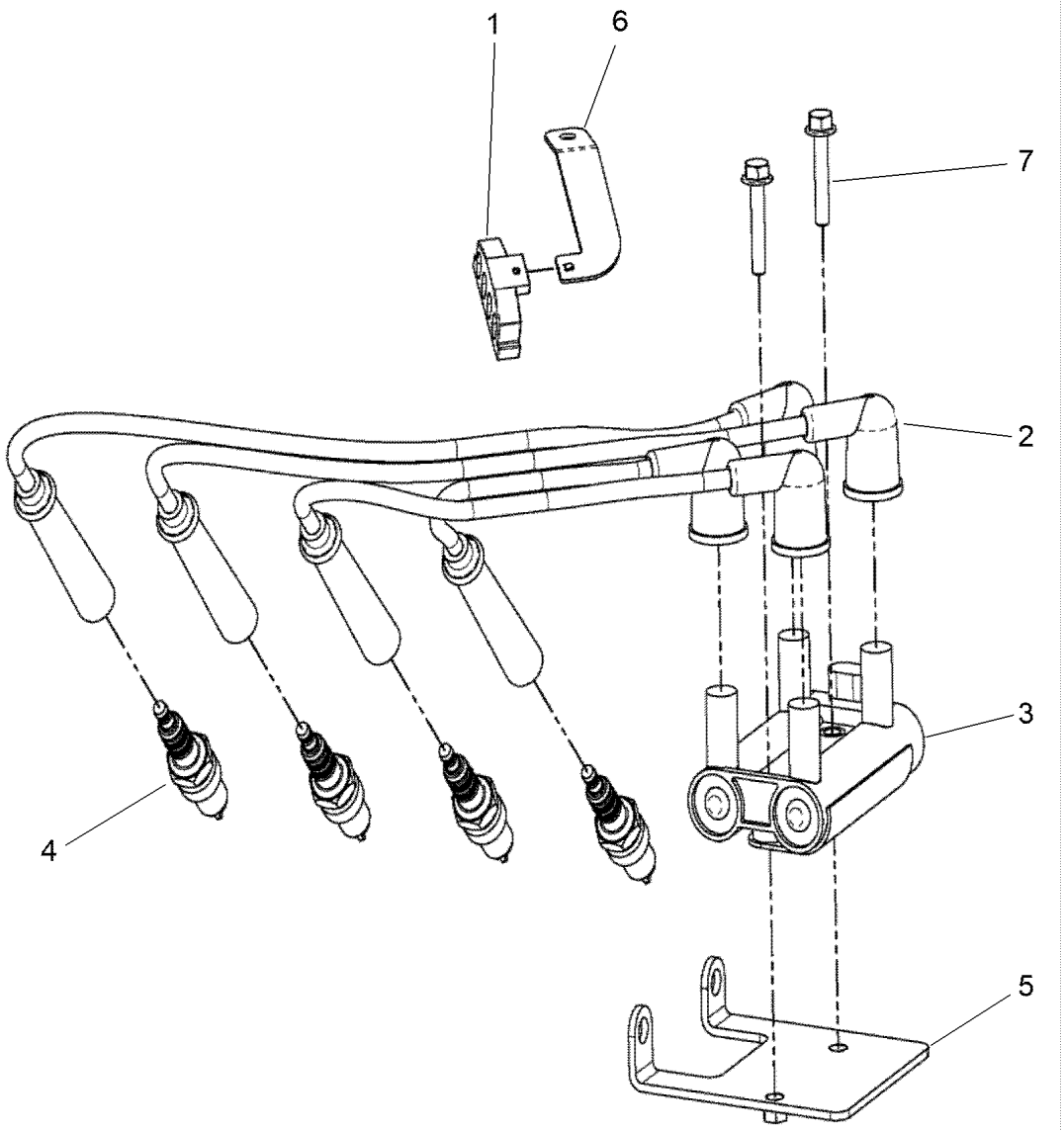

Ignition Assembly

Ref.	*Part Number*	*Qty.*	*Description*
1	147-2688	1	Retainer, Wire#4
2	147-2689	1	Wires, Spark Plug
3	147-2690	1	Coil, Ignition
4	145-2128	4	Spark Plug
5	147-2691	1	Bracket, Coil Rear
6	147-2692	1	Bracket, Ignition Wires
7	147-2693	2	Bolt

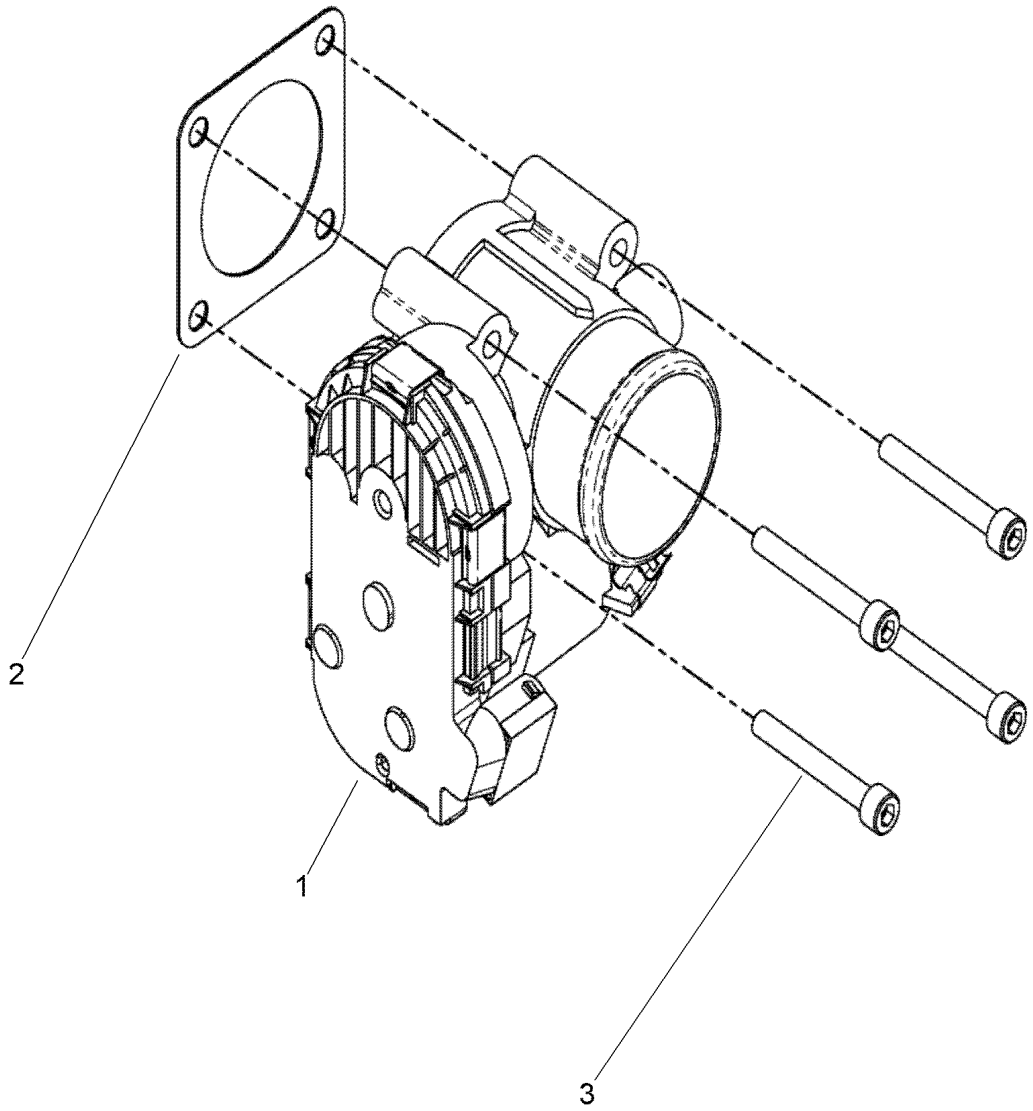

Throttle Body Assembly

Ref.	*Part Number*	*Qty.*	*Description*
1	147-2694	1	Body, Throttle
2	147-2695	1	Gasket
3	147-2696	4	Screw

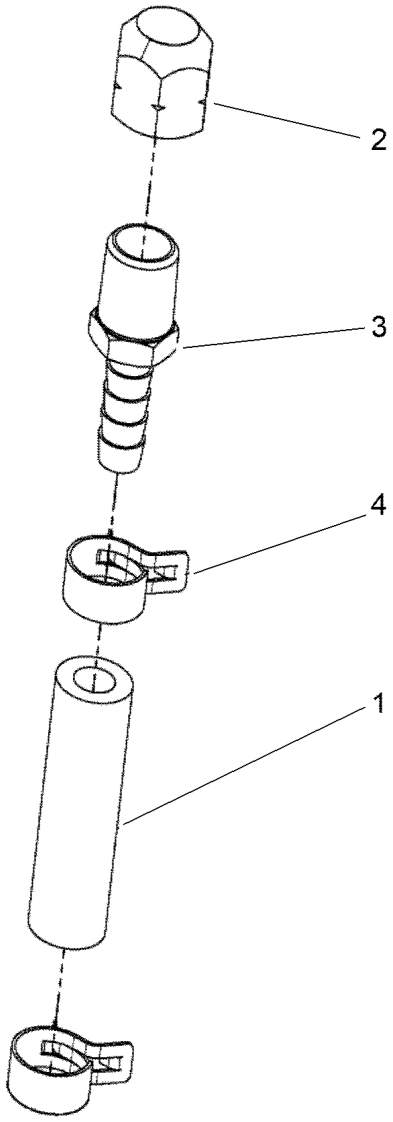

Coolant Plug Assembly

Ref.	*Part Number*	*Qty.*	*Description*
1	147-2697	1	Hose, Heater (2 Inches)
2	147-2698	1	Fitting
3	147-2699	1	Fitting
4	145-2660	2	Clamp, Tension

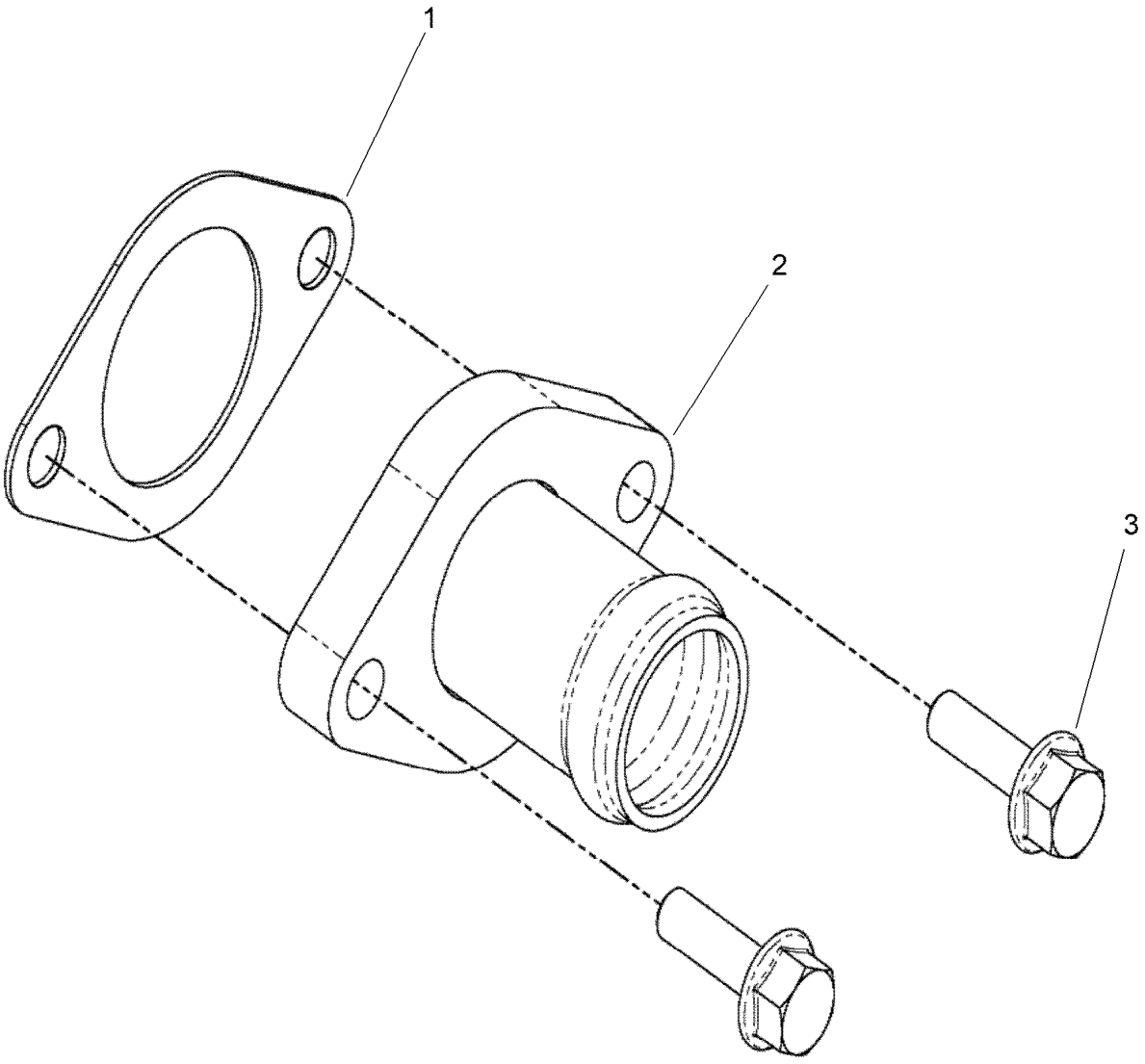

Coolant Inlet Assembly

Ref.	*Part Number*	*Qty.*	*Description*
1	145-2661	1	Gasket, Water Inlet
2	145-2662	1	Inlet, Coolant Straight
3	145-2663	2	Bolt, Flange

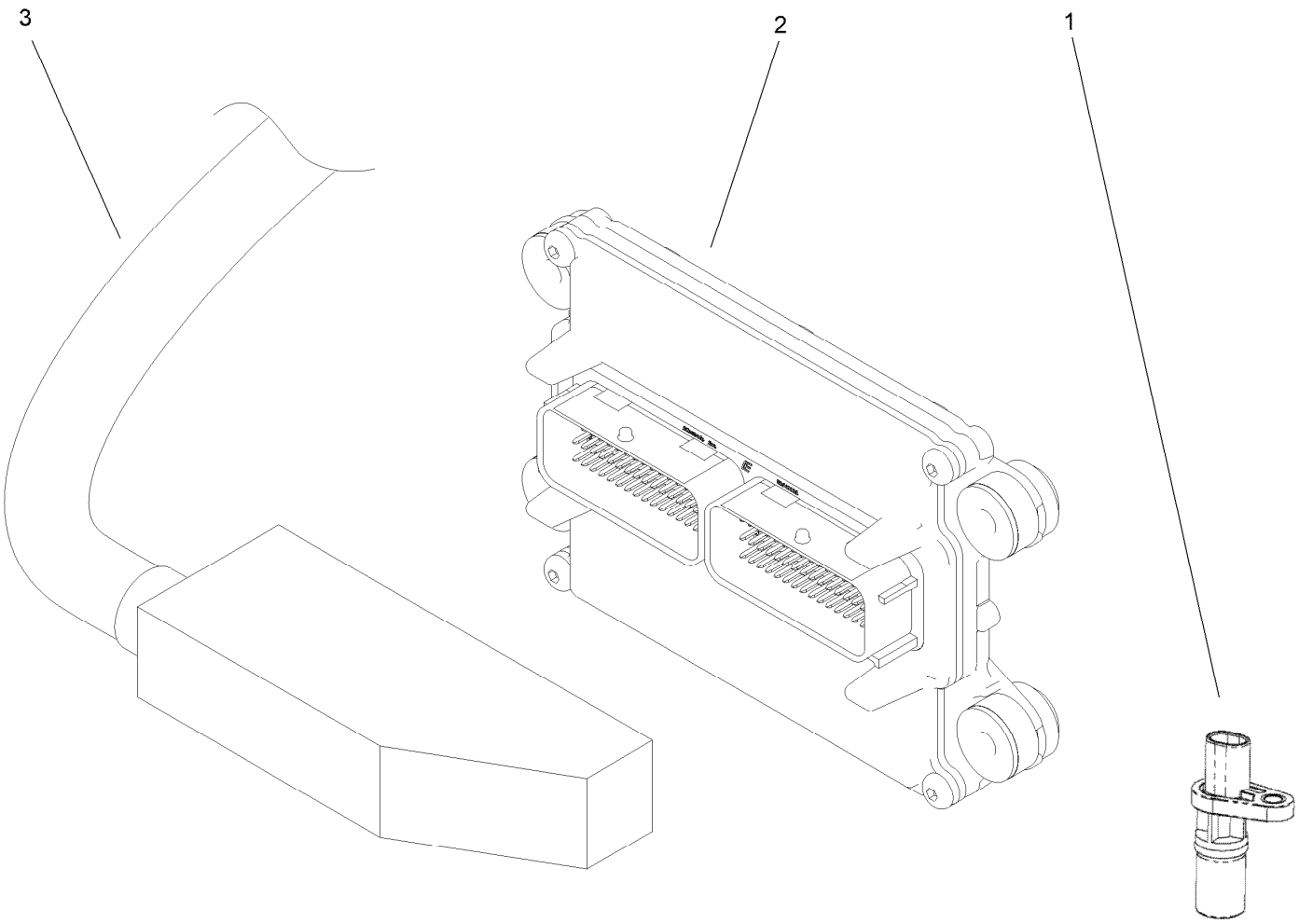

Electrical Assembly

Ref.	*Part Number*	*Qty.*	*Description*
1	145-2010	1	Sensor-Position, Crankshaft
2	144-2232	1	Ecu
3	145-2666	1	Harness

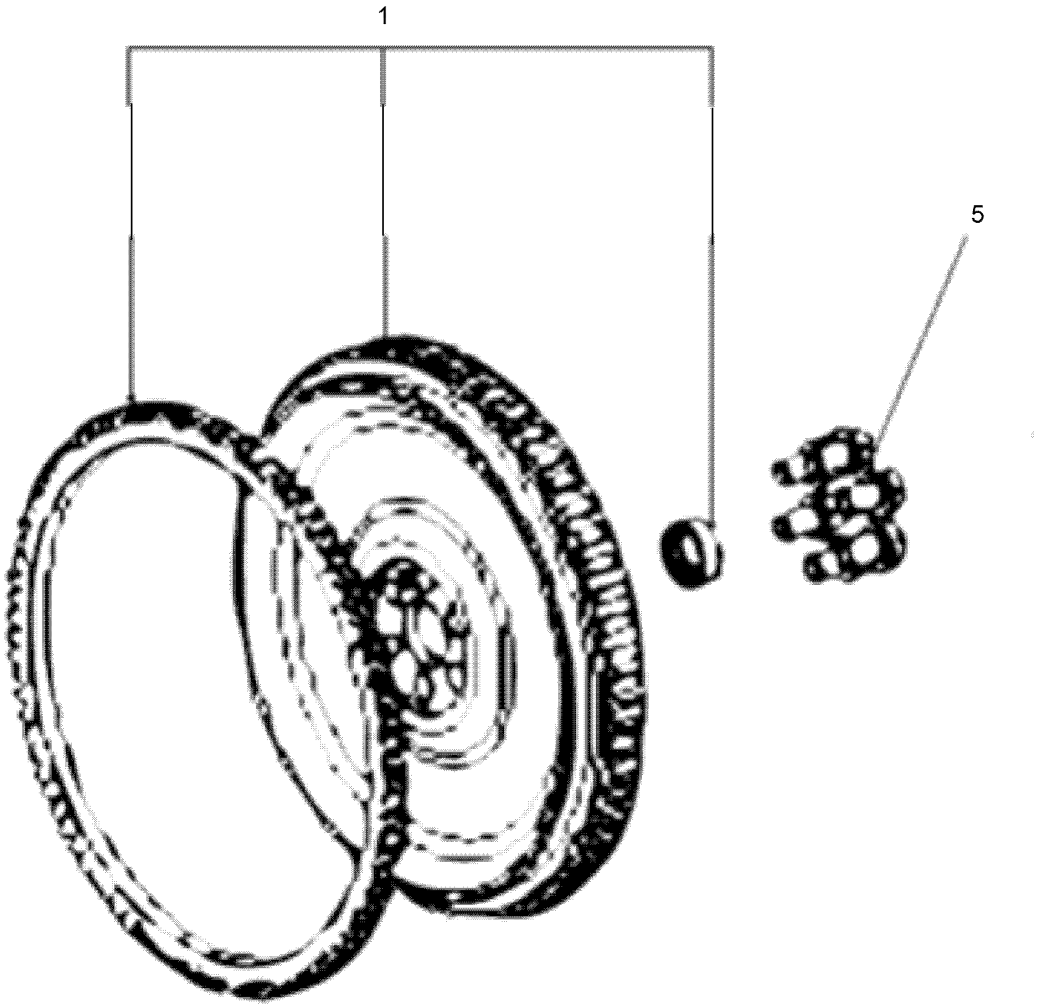

Flywheel Assembly

Ref.	*Part Number*	*Qty.*	*Description*
1	163-4948	1	Flywheel Assy
5	163-4949	6	Bolt,Flywheel

Attachments and Accessories

For 08100TC — Workman UTX 2 Passenger Utility Vehicle

Product Name	Model/Part
Canopy-Standard	08110
Glass Windshield and Wiper	08112
Polycarbonate Windshield	08113
Polycarbonate Doors - Standard	08114
Polycarbonate Rear Windshield	08116
Half Doors - Standard/Front (WM UTX)	08117
Half Doors - Crew/Rear (WM UTX)	08118
Heater Only (WM UTX)	08120
HVAC - Crew Hose Kit (WM UTX)	08124
HVAC - GAS (WM UTX)	08126
Overhead Console and Wire Harness	08130
Work Lights	08131
Beacon	08132
Electric Bed Lift	08134
Homologation Kit, WM UTX	08135
Supervisor Key	08136
Side View Mirror Kit	08140
Rear View Mirror Kit	08141
Center Bed Racking, Workman UTX/MDX	08142
Under Seat Storage	08143
27in Alloy Wheels and Tires	08144
Draw Bar	08146
Side Bed Racking, Workman UTX/MDX/GTX	08148
Reverse Alarm Kit	131-8549
Mount-Ball	133-7116
Small Bedrack Mount Grip Kit	136-6311
Large Bedrack Mount Grip Kit	136-6312
Wrench-Adjuster, Spring	139-4678
Puller-Clutch, UTX	140-4672
Universal Wireless Hourmeter Kit	144-2436
Universal 12V Power Point Kit	144-2438
Spark Arrester Kit	144-2443

Notes:

Notes:

Notes:



Count on it.