Form No. 3471-761 Rev A

TORO®

Count on it.

Parts Catalog

# Reelmaster® 5010-H

## Traction Unit

**Model No. 03950—Serial No. 417460636 and Up**

Register at www.Toro.com.
Original Instructions (EN)

CE

*3471-761* A

# Ordering Replacement Parts

To order replacement parts, please supply the part number, the quantity, and the description of each part desired.

**Understanding Reference Numbers**

Each identified part in an illustration has a reference number. The reference number for a part also appears in the parts list, along with other information about the part.

This catalog uses two special reference number formats, one to indicate parts in a service assembly and another to indicate the quantity of a given part in an illustration.

**Service Assembly Reference Numbers**

Parts in service assemblies have reference numbers in the form a:b. The a represents the reference number of the entire service assembly and the b represents a sequential number unique to each part within the service assembly.

For example, a wheel assembly might be identified by reference number 6, the tire by 6:1, the valve by 6:2, and the wheel by 6:3. When you order the assembly identified by reference number 6, you receive all parts identified by reference numbers 6:1,6:2, and 6:3. However, you may also order any part individually. Reference numbers of this type appear in illustration and in parts lists.

**Reference Numbers Indicating Quantity**

In an illustration, if a reference number indicates more than one part, the reference number has the form nX y. The n represents the quantity of the part, the X is the multiplication symbol, and the y represents the reference number.

For example, in an illustration, the reference number 2X 37 means that two of the parts identified by reference number 37 are indicated.

# Contents


Frame Assembly . . . 5
Platform and Shroud Assembly . . . 6
Pedal Assembly . . . 7
Steering Assembly . . . 8
Steering Tilt Column Assembly No. 106-3622 . . . 9
Steering Valve Assembly No. 106-3621 . . . 10
Control Panel Assembly . . . 11
Joystick Bracket Assembly No. 120-5280 . . . 13
Front Axle Assembly . . . 14
Rear Axle Assembly . . . 15
Tie Rod Assembly No. 139-6029 . . . 16
Hub and Spindle Assembly No. 117-8961 . . . 17
No. 1, 4 and 5 Lift Arm Assembly . . . 18
No. 2 and 3 Lift Arm Assembly . . . 20
Seat and Control Arm Wiring Harness Assembly . . . 21
Battery Electrical Assembly . . . 22
Electrical Assembly . . . 23
Wire Harness Assembly No. 122-2913 . . . 24
Gear Pump Assembly . . . 25
Tandem Gear Pump Assembly No. 125-1530 . . . 26
Seat Base Assembly . . . 27
Hood Assembly . . . 28
Radiator Assembly . . . 29
Fuel System Assembly . . . 31
Hydraulic Tank Assembly . . . 32
Seat and Roll-Over Protection System Assembly . . . 33
Seat Assembly No. 139-2700 . . . 34
Mechanical Seat Suspension Assembly No. 145-5295 . . . 35
Traction Pump Mounting Assembly . . . 36
Hydraulic Pump Assembly No. 144-2060 . . . 37
Traction Hydraulic Assembly . . . 39
Hydraulic Motor Assembly No. 139-6038 . . . 40
Hydraulic Motor Assembly No. 139-6039 . . . 41
Hydraulic Brake Assembly . . . 42
Brake Release Manifold Assembly No. 139-6046 . . . 43
Front Lift Hydraulic Assembly . . . 44
Hydraulic Cylinder Assembly No. 138-6999 . . . 45
Hydraulic Cylinder Assembly No. 163-3534 . . . 46
Hydraulic Manifold Block Assembly No. 105-7577 . . . 47
Rear Lift Hydraulic Assembly . . . 48
Steering Hydraulic Assembly . . . 49
Hydraulic Cylinder Assembly No. 110-9035 . . . 51
Engine, Air Cleaner and MufflerAssembly . . . 52
Air Cleaner Assembly No. 106-5277 . . . 54
48 Volt Battery Assembly . . . 55
48 Volt Contactor Assembly . . . 56
Reel Motor Plumbing Assembly . . . 57
Generator And Drive Shaft Assembly . . . 58
Generator/Controller Assembly No. 127-2655 . . . 59
Generator Assembly No. 127-2653 . . . 60
Driveshaft Assembly No. 139-6044 . . . 61
Crankcase Assembly . . . 62
Oil Pan and Dipstick Assembly . . . 63
Cylinder Head Assembly . . . 64



**© 2024—The Toro® Company**


**8111 Lyndale Avenue South**
**Bloomington, MN 55420**





**Contact us at www.Toro.com.**
**Printed in the USA.**
**All Rights Reserved**

# Contents (continued)

Gear Case and Oil Filter Cartridge Assembly . . . . . 65
Cylinder Head Cover Assembly . . . . . 66
Main Bearing Case Assembly . . . . . 67
Camshaft and Idle Gear Shaft Assembly . . . . . 68
Piston and Crankshaft Assembly . . . . . 69
Fuel Camshaft and Governor Shaft Assembly . . . . . 70
Idle Apparatus Assembly . . . . . 71
Injection Pump Assembly . . . . . 72
Governor Assembly . . . . . 73
Speed Control Plate Assembly . . . . . 74
Nozzle Holder and Glow Plug Assembly . . . . . 75
Nozzle Holder Assembly . . . . . 76
Cover Assembly . . . . . 77
Alternator, Pulley and Fan Assembly . . . . . 78
Alternator Assembly No. 131-6557 . . . . . 79
Starter and Flywheel Assembly . . . . . 80
Starter Assembly No. 131-6561 . . . . . 81
Water Flange and Thermostat Assembly . . . . . 82
Water Pump Assembly . . . . . 83
Valve and Rocker Arm Assembly . . . . . 84
Inlet and Exhaust Manifold Assembly . . . . . 85
Miscellaneous Engine Parts . . . . . 86
Attachments and Accessories . . . . . 87

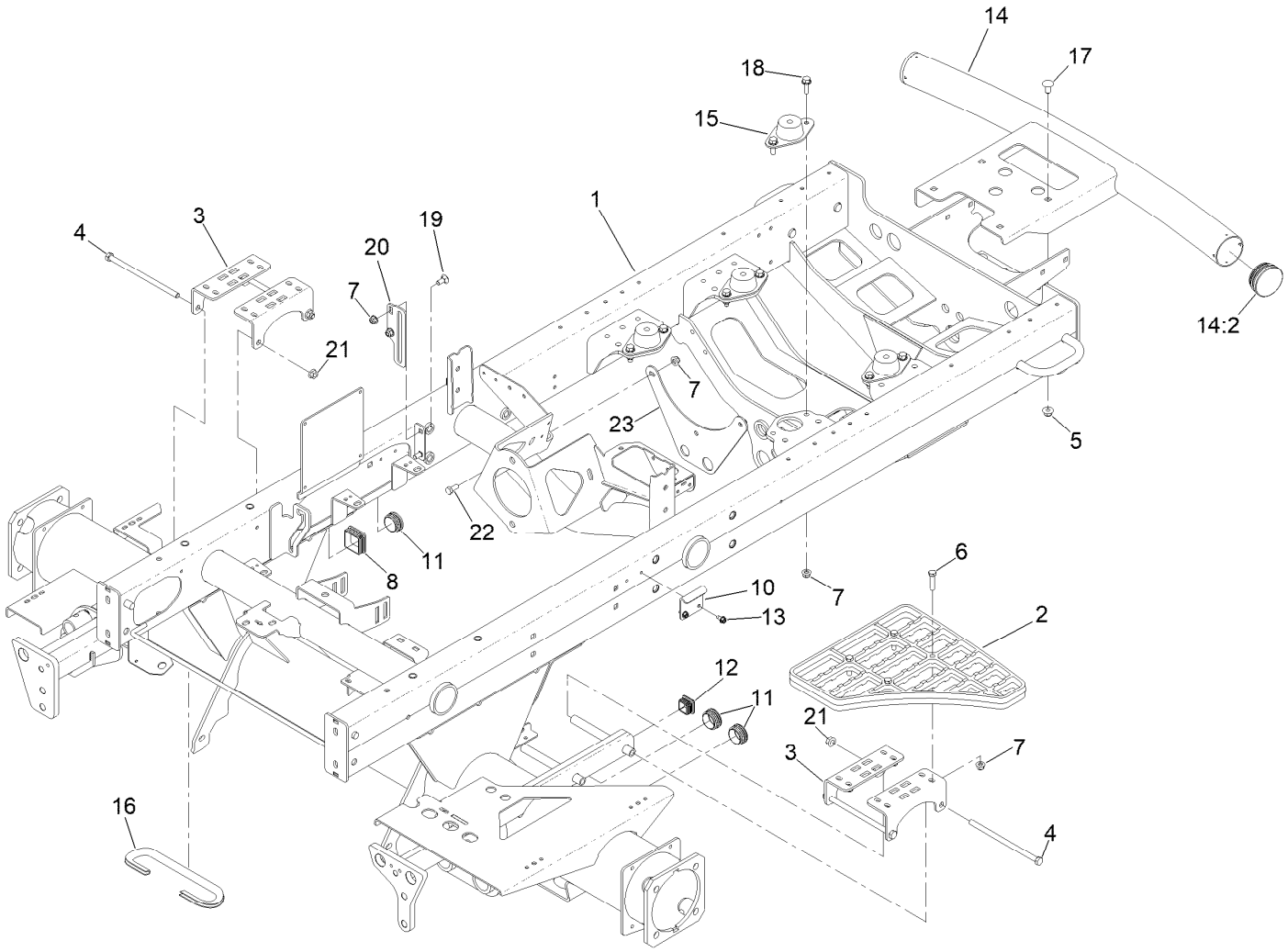


# Frame Assembly

| Ref. | Part Number | Qty. | Description |
|---|---|---|---|
| 1 | 145-2467 | 1 | Frame ASM-Hybrid |
| 2 | 110-9041 | 1 | Step-Aluminum |
| 3 | 127-2697-01 | 4 | Bracket-Step |
| 4 | 323-36 | 4 | Screw-HH |
| 5 | 104-8301 | 4 | Nut-HF, NI |
| 6 | 322-17 | 4 | Screw-HH |
| 7 | 104-8300 | 16 | Nut-HF, NI |
| 8 | 95-9495 | 1 | Cap |
| 10 | 110-8972 | 1 | Hook-Latch |
| 11 | 110-9012 | 3 | Caplug |
| 12 | 110-9013 | 1 | Caplug |
| 13 | 32104-17 | 2 | Screw-HWH |

| Ref. | Part Number | Qty. | Description |
|---|---|---|---|
| 14 | 147-3550 | 1 | Bumper ASM |
| 14:2 | 2410-42 | 2 | Cap-End |
| 15 | 120-6274 | 4 | Mount-Engine |
| 16 | 145-2520 | 1 | Trim-Brake Hose |
| 17 | 3231-21 | 4 | Screw-CARR |
| 18 | 3234-29 | 8 | Screw-HHF |
| 19 | 3230-1 | 2 | Bolt-CARR |
| 20 | 108-7584-01 | 1 | Plate-Guide, Rod |
| 21 | 32128-21 | 4 | Nut-HF Lock |
| 22 | 322-3 | 2 | Screw-HH |
| 23 | 145-2559-01 | 1 | Bracket-Bulkhead |

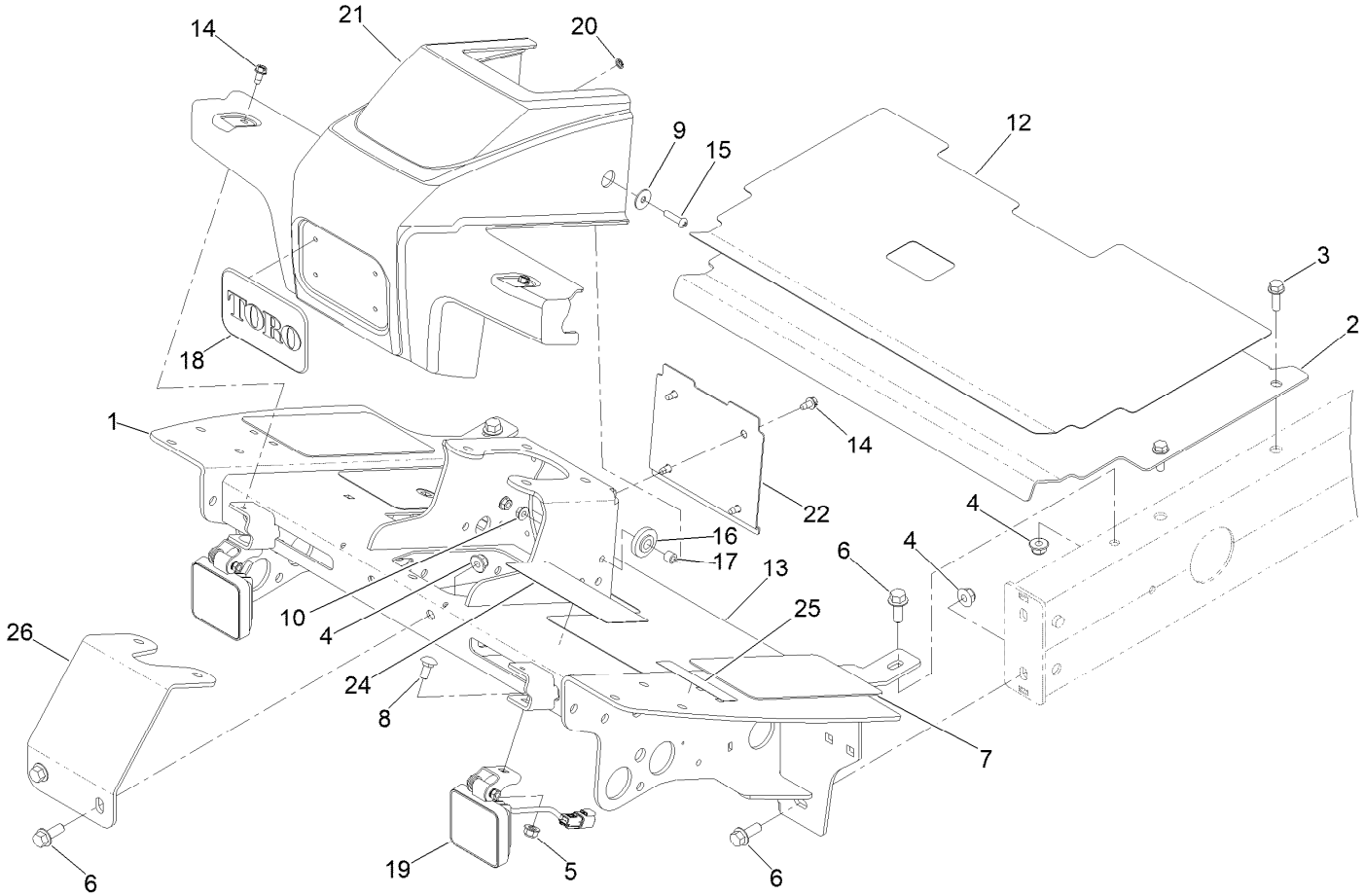


# Platform and Shroud Assembly

| Ref. | Part Number | Qty. | Description |
|---|---|---|---|
| 1 | 145-2490-01 | 1 | Platform ASM |
| 2 | 115-8064-01 | 1 | Plate-Floor |
| 3 | 3234-17 | 4 | Screw-HHF |
| 4 | 104-8301 | 6 | Nut-HF, NI |
| 5 | 104-8300 | 2 | Nut-HF, NI |
| 6 | 3234-11 | 6 | Screw-HHF |
| 7 | 125-2910 | 2 | Tread-Floor, Side |
| 8 | 3230-1 | 2 | Bolt-CARR |
| 9 | 87-6630 | 2 | Washer-Plain |
| 10 | 32128-33 | 2 | Nut-HF |
| 12 | 125-2911 | 1 | Tread-Panel, Service |
| 13 | 145-2510 | 1 | Tread-Floor Board |
| 14 | 32104-17 | 6 | Screw-HWH |
| 15 | 106-9518 | 2 | Screw-PRH |
| 16 | 240-11 | 2 | Bushing-Flange |
| 17 | 66-8010 | 2 | Spacer |
| 18 | 93-6028 | 1 | Plate-Logo |
| 19 | 145-2598 | 2 | Light-Work, LED |
| 20 | 138-6996 | 4 | Nut-Push |
| 21 | 110-0944 | 1 | Shroud-Platform |
| 22 | 110-0947-03 | 1 | Plate-Cover |
| 24 | 133-2930 | 1 | Decal-Danger |
| 24 | 133-2931 | 1 | Decal-Danger (CE) |
| 25 | 133-8062 | 1 | Decal-Spark Arrestor |
| 26 | 110-8876-0P | 1 | Brace-Column |

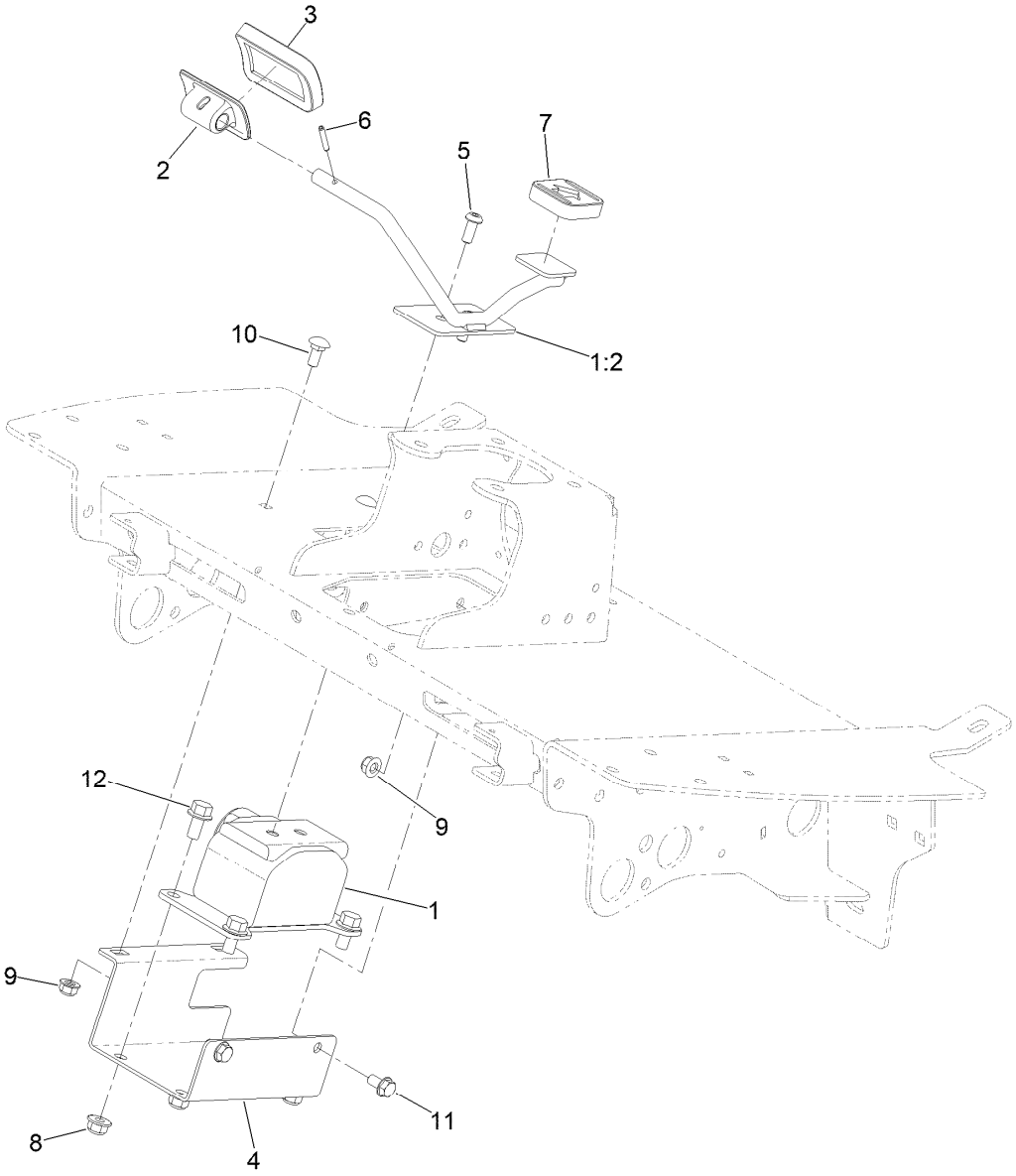


# Pedal Assembly

| *Ref.* | *Part Number* | *Qty.* | *Description* |
|---|---|---|---|
| 1 | 145-2545 | 1 | E-Pedal ASM |
| 1:2 | 145-2521 | 1 | Pedal ASM |
| 2 | 117-9507 | 1 | Pedal-Accelerator |
| 3 | 74-9100 | 1 | Pad-Pedal, Forward |
| 4 | 145-2489-0P | 1 | Bracket-Pedal, Mount |
| 5 | 3274-96 | 2 | Screw-HSBH |
| 6 | 32121-45 | 1 | Pin-Spring |
| 7 | 74-9110 | 1 | Pad-Pedal, Reverse |
| 8 | 104-8301 | 4 | Nut-HF, NI |
| 9 | 104-8300 | 4 | Nut-HF, NI |
| 10 | 3230-1 | 2 | Bolt-CARR |
| 11 | 3234-7 | 2 | Screw-HHF |
| 12 | 3234-1 | 4 | Screw-HHF |

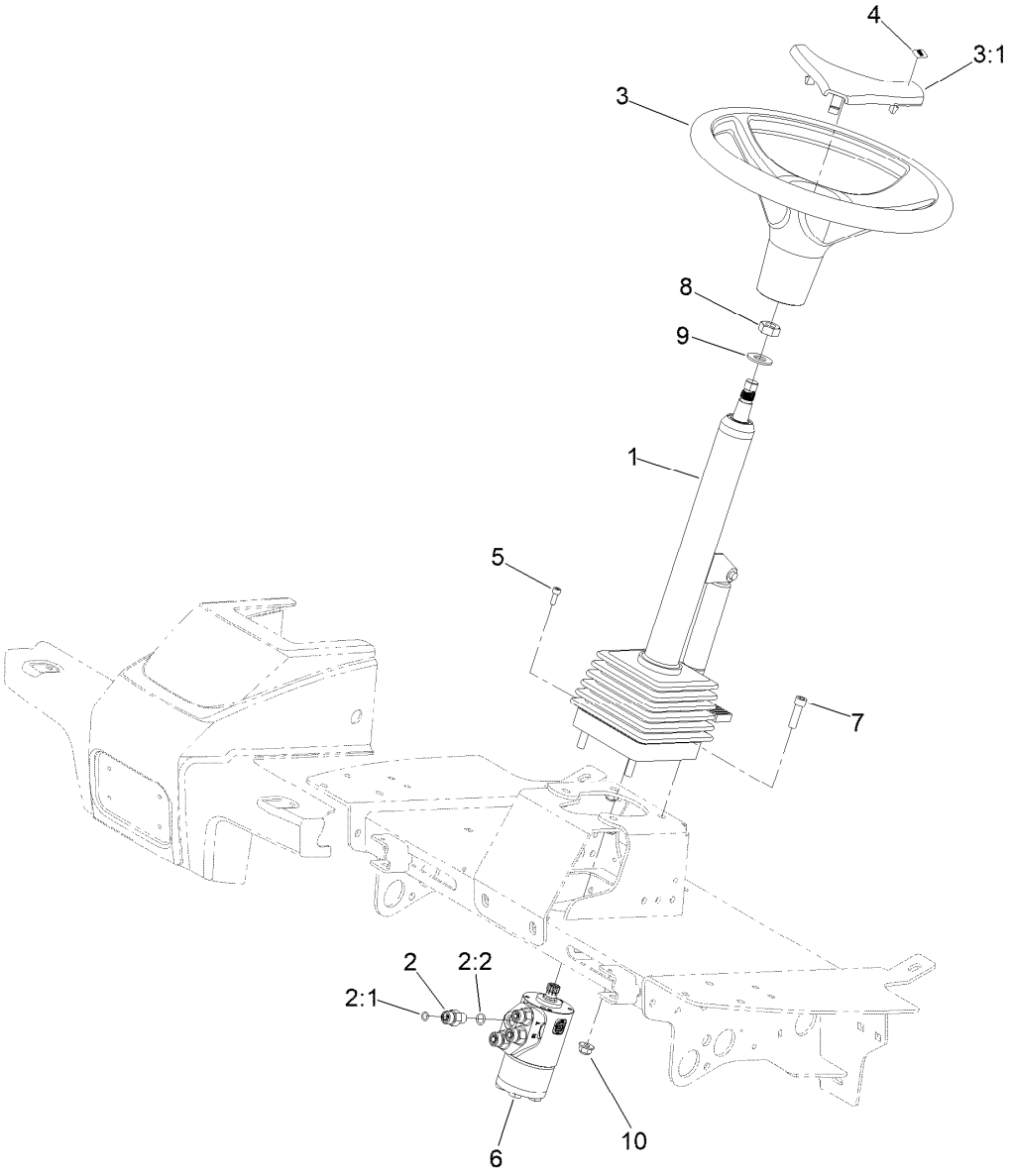


# Steering Assembly

| *Ref.* | *Part Number* | *Qty.* | *Description* |
|---|---|---|---|
| 1 | 106-3622 | 1 | Steering Tilt Column ASM |
| 2 | 340-2 | 4 | Fitting-Straight |
| 2:1 | 237-22 | 1 | O-Ring |
| 2:2 | 237-42 | 1 | O-Ring |
| 3 | 98-1471 | 1 | Wheel-Steering |
| 3:1 | 98-1468 | 1 | Cover-Wheel, Steering |
| 4 | 98-1459 | 1 | Decal |
| 5 | 105-2409 | 4 | Screw-HSH |
| 6 | 106-3621 | 1 | Steering Valve ASM |
| 7 | 3274-1 | 4 | Screw-HSH |
| 8 | 3296-33 | 1 | Nut-Lock, NI |
| 9 | 3256-27 | 1 | Washer-Flat |
| 10 | 104-8301 | 4 | Nut-HF, NI |

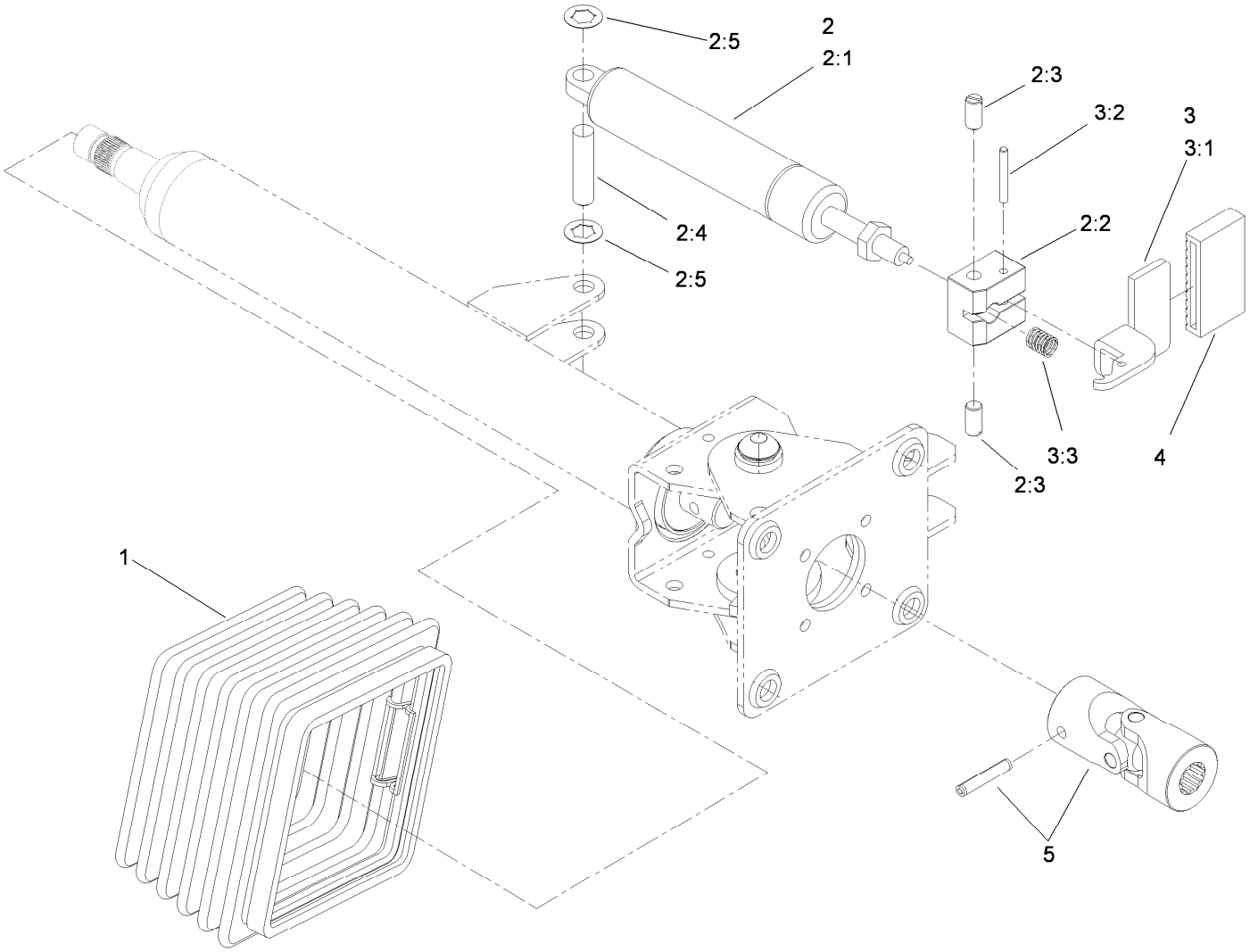


# Steering Tilt Column Assembly No. 106-3622

| *Ref.* | *Part Number* | *Qty.* | *Description* |
|---|---|---|---|
| 1 | 110-6462 | 1 | Bellows-Rubber |
| 2 | 110-6463 | 1 | Cylinder Service Kit |
| 2:1 | | 1 | Cylinder-Gas ● |
| 2:2 | | 1 | Block-Pedal ● |
| 2:3 | | 2 | Bolt ● |
| 2:4 | | 1 | Pin ● |
| 2:5 | | 2 | Washer-Lock ● |
| 3 | 110-6464 | 1 | Pedal Service Kit |
| 3:1 | | 1 | Pedal ● |
| 3:2 | | 1 | Pin ● |
| 3:3 | | 1 | Spring ● |
| 4 | 110-6465 | 1 | Cover-Pedal |
| 5 | 120-6256 | 1 | Universal Joint Kit |

● Not serviced separately

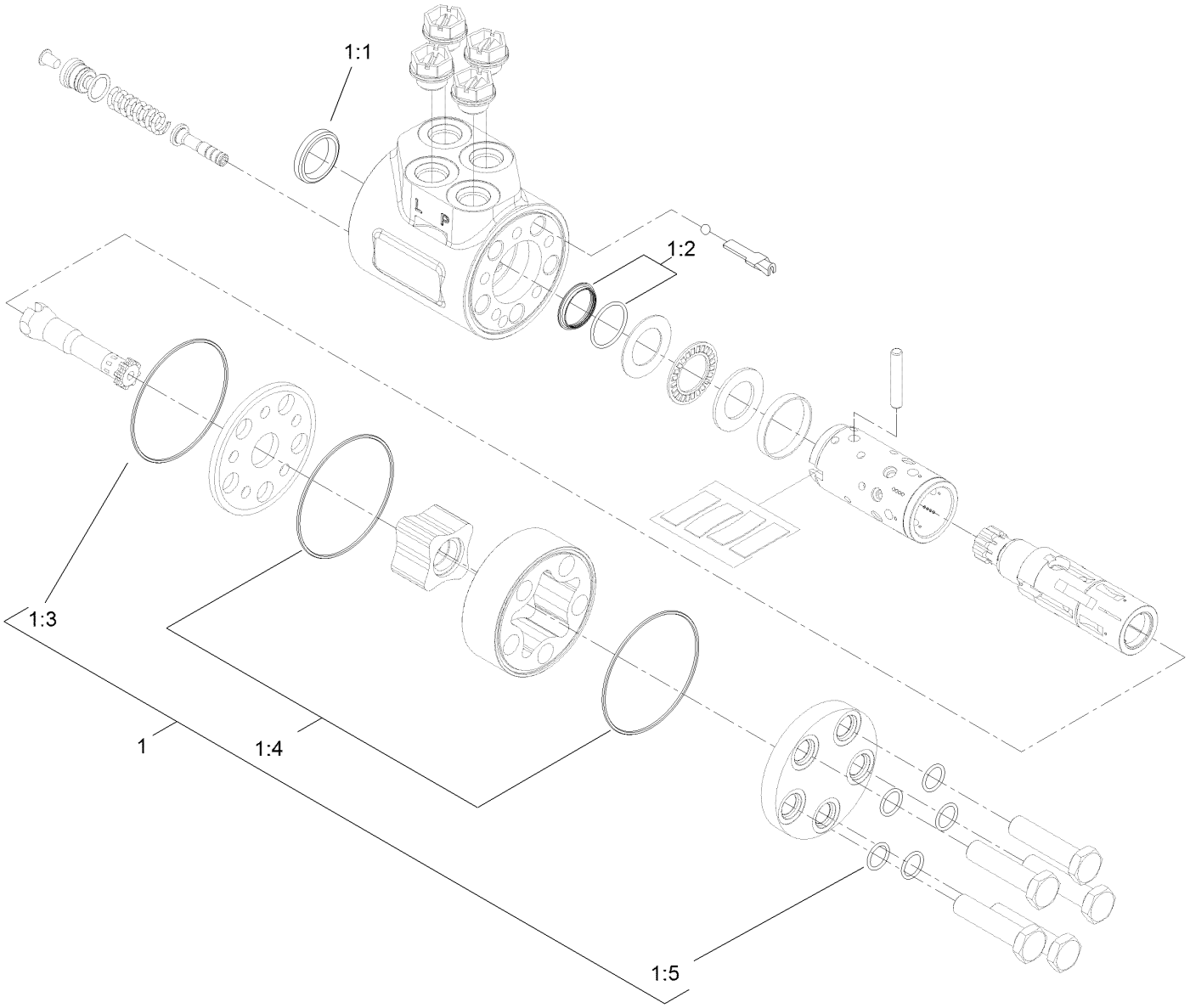


# Steering Valve Assembly No. 106-3621

| *Ref.* | *Part Number* | *Qty.* | *Description* |
|---|---|---|---|
| 1 | 106-6716 | 1 | Seal Kit |
| 1:1 | | 1 | Ring-Seal, Dust ● |
| 1:2 | | 1 | Seal-Shaft ● |
| 1:3 | | 1 | O-Ring ● |
| 1:4 | | 2 | O-Ring ● |
| 1:5 | | 5 | O-Ring ● |

● Not serviced separately

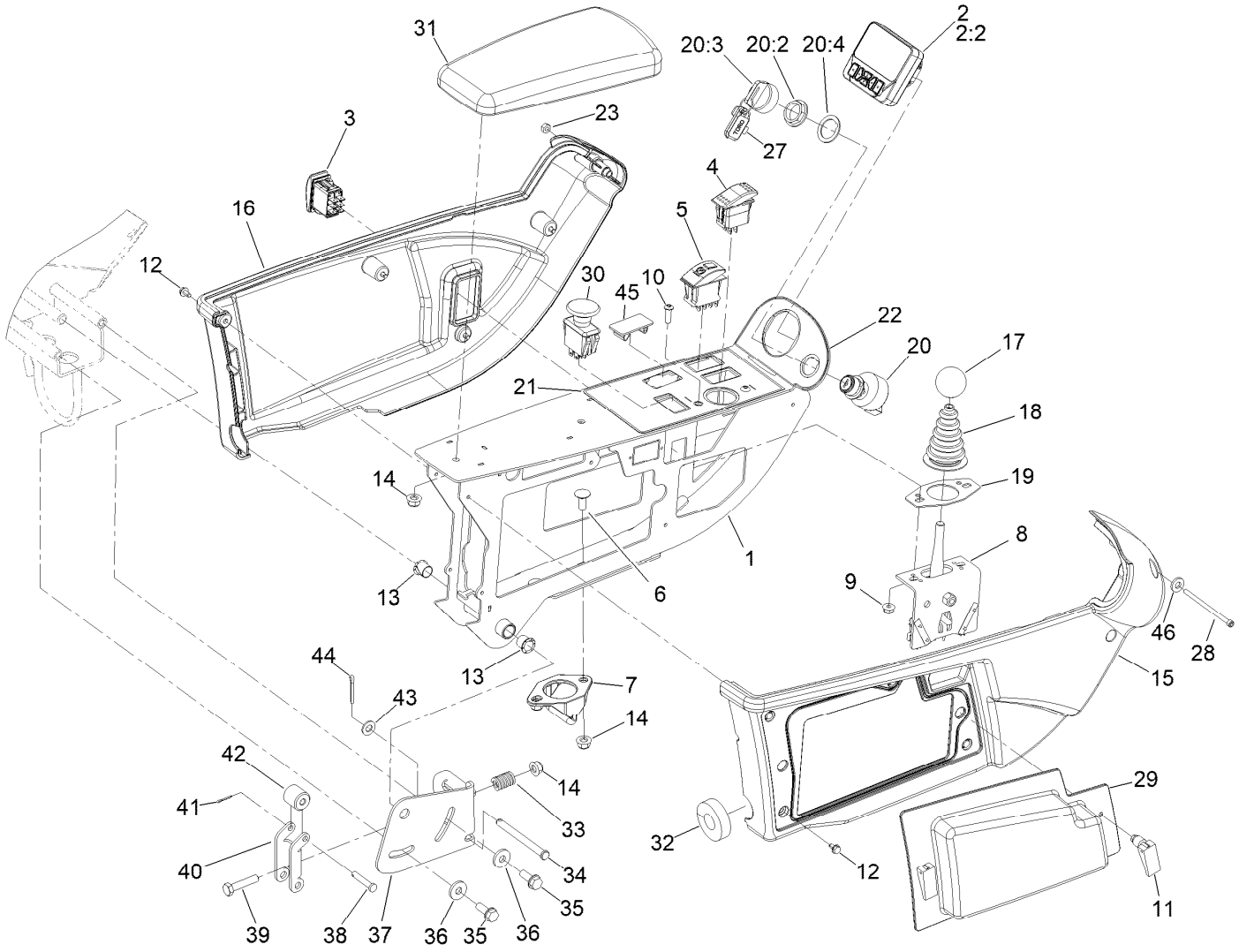


# Control Panel Assembly

| Ref. | Part Number | Qty. | Description |
|---|---|---|---|
| 1 | 145-2474-03 | 1 | Frame ASM, Control Arm [black] |
| 2 | 161-1700 | 1 | Display-LCD |
| 2:2 | 161-1723 | 1 | Nut-Display |
| 3 | 95-8999 | 1 | Switch-Rocker, On-None-On |
| 4 | 114-3329 | 1 | Switch-Rocker |
| 5 | 111-2254 | 1 | Switch-Rocker, On-None-On |
| 6 | 3230-23 | 2 | Bolt-CARR |
| 7 | 125-1938 | 1 | Latch |
| 8 | 120-5280 | 1 | Bracket-Joystick |
| 9 | 104-7201 | 2 | Nut-HF, NI |
| 10 | 3274-69 | 2 | Screw-HSBH |
| 11 | 74-5950 | 2 | Latch-Swell |
| 12 | 104-2065 | 10 | Screw-HWH |
| 13 | 256-257 | 2 | Bushing-Nyliner |
| 14 | 104-8300 | 5 | Nut-HF, NI |
| 15 | 108-7605 | 1 | Cover-RH |
| 16 | 108-7604 | 1 | Cover-LH |
| 17 | 233-42 | 1 | Knob |

| Ref. | Part Number | Qty. | Description |
|---|---|---|---|
| 18 | 93-5961 | 1 | Boot-Lever |
| 19 | 112-9181 | 1 | Plate-Boot |
| 20 | 106-5269 | 1 | Ignition Switch ASM |
| 20:2 | 108-8660 | 1 | Nut-Mounting |
| 20:3 | 106-5270 | 1 | Ignition Key Set |
| 20:4 | 108-8659 | 1 | Washer-Backup |
| 21 | 145-2549 | 1 | Decal-Control Panel |
| 22 | 120-4158 | 1 | Decal-Console, Upper |
| 23 | 3296-2 | 1 | Nut-Lock, NI |
| 27 | 99-8970 | 1 | Key-Latch, Hood |
| 28 | 161-8374 | 1 | Screw-HSH |
| 29 | 114-0446 | 1 | Panel-Access |
| 30 | 93-9999 | 1 | Switch-PTO |
| 31 | 108-7602 | 1 | Rest-Arm |
| 32 | 145-2594 | 1 | Seal-Foam |
| 33 | 110-5331 | 1 | Spring-Compression |
| 34 | 283-88 | 1 | Pin-Clevis |
| 35 | 32144-41 | 2 | Screw-Taptite |
| 36 | 4-2390 | 2 | Washer-Flat |
| 37 | 110-5313-03 | 1 | Bracket-Retainer |
| 38 | 283-73 | 1 | Pin-Clevis |

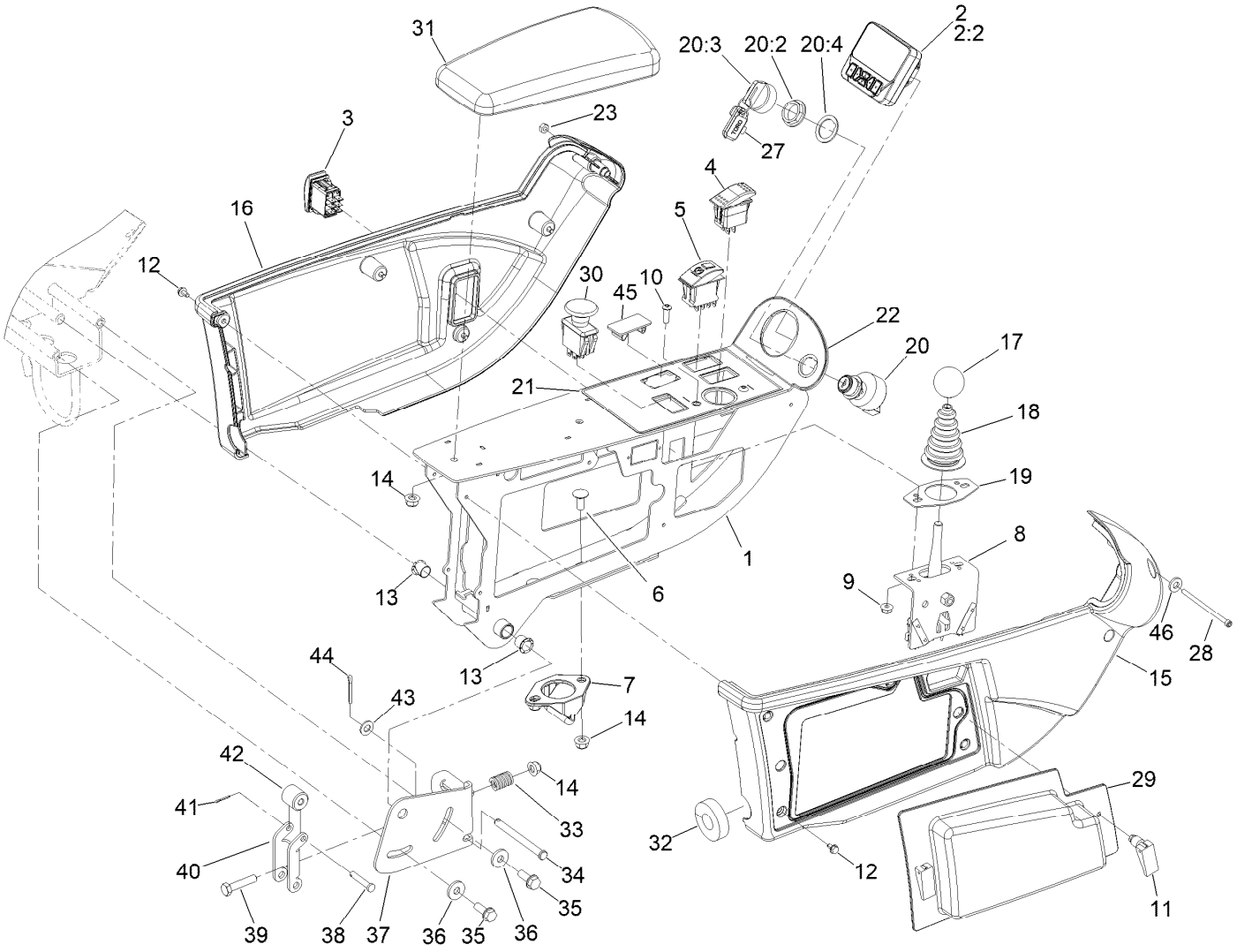


# Control Panel Assembly (continued)

| Ref. | Part Number | Qty. | Description |
|---|---|---|---|
| 39 | 322-7 | 1 | Screw-HH |
| 40 | 110-5314 | 1 | Latch |
| 41 | 3272-1 | 1 | Pin-Cotter |
| 42 | 110-8856 | 1 | Spacer |
| 43 | 3256-23 | 1 | Washer-Plain |
| 44 | 3272-11 | 1 | Pin-Cotter |
| 45 | 100-1535 | 1 | Switch-Rocker, (On)-Off-(On) |
| 46 | 3256-51 | 1 | Washer-Flat |

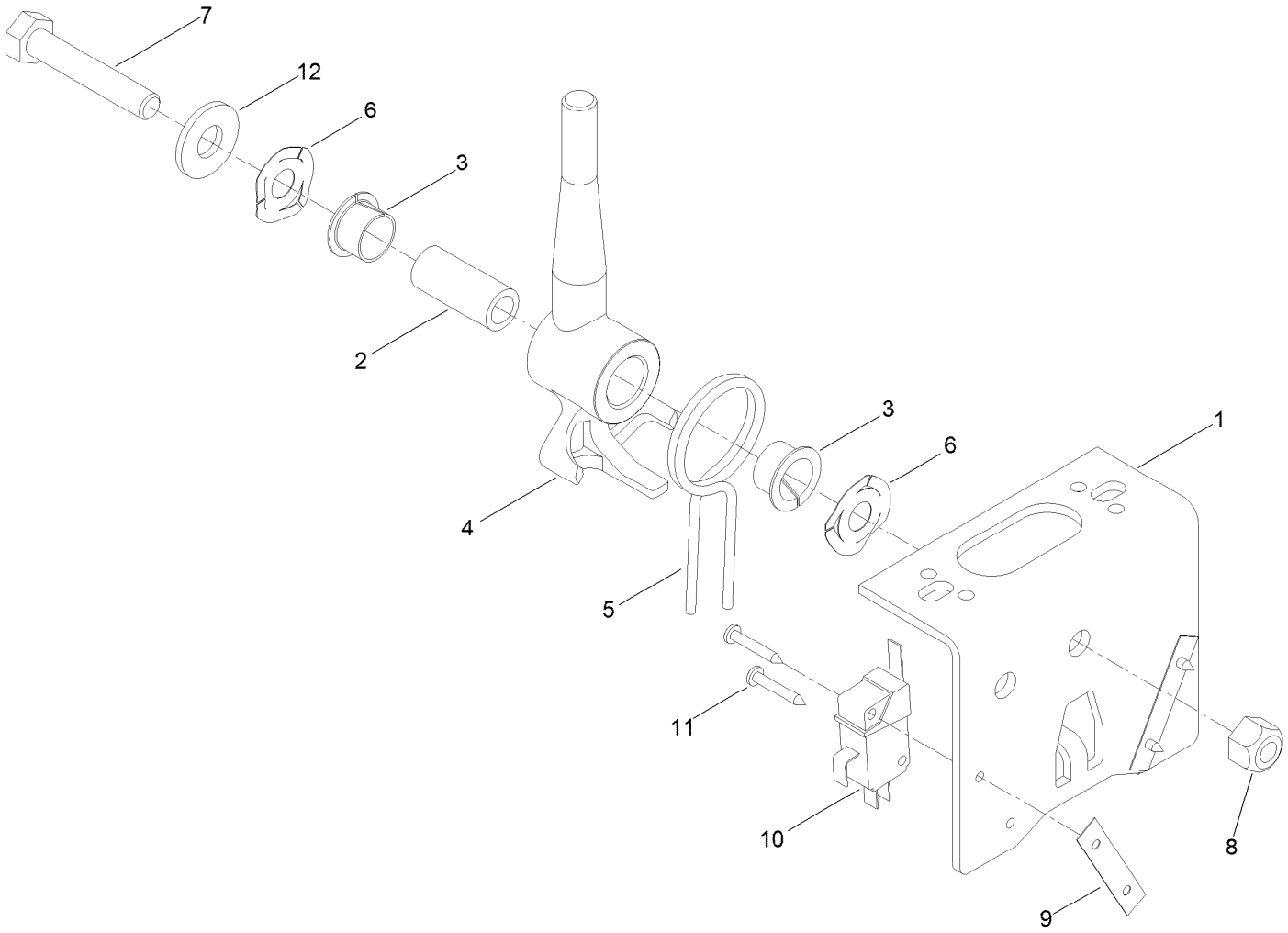


# Joystick Bracket Assembly No. 120-5280

| *Ref.* | *Part Number* | *Qty.* | *Description* |
|---|---|---|---|
| 1 | 115-5357-03 | 1 | Bracket-Joystick |
| 2 | 106-4192 | 1 | Spacer |
| 3 | 93-5547 | 2 | Bushing-Nylon |
| 4 | 119-3540 | 1 | Hub-Pivot, Joystick |
| 5 | 105-8289 | 1 | Spring-Torsion |
| 6 | 106-4193 | 2 | Washer-Finger, Spring |
| 7 | 322-9 | 1 | Screw-HH |
| 8 | 3296-29 | 1 | Nut-Lock, NI |
| 9 | 3290-354 | 2 | Nut-Speed |
| 10 | 108-6496 | 2 | Switch (W/Boot) |
| 11 | 95-3003 | 4 | Screw-PPHTF |
| 12 | 3256-3 | 1 | Washer-Flat |

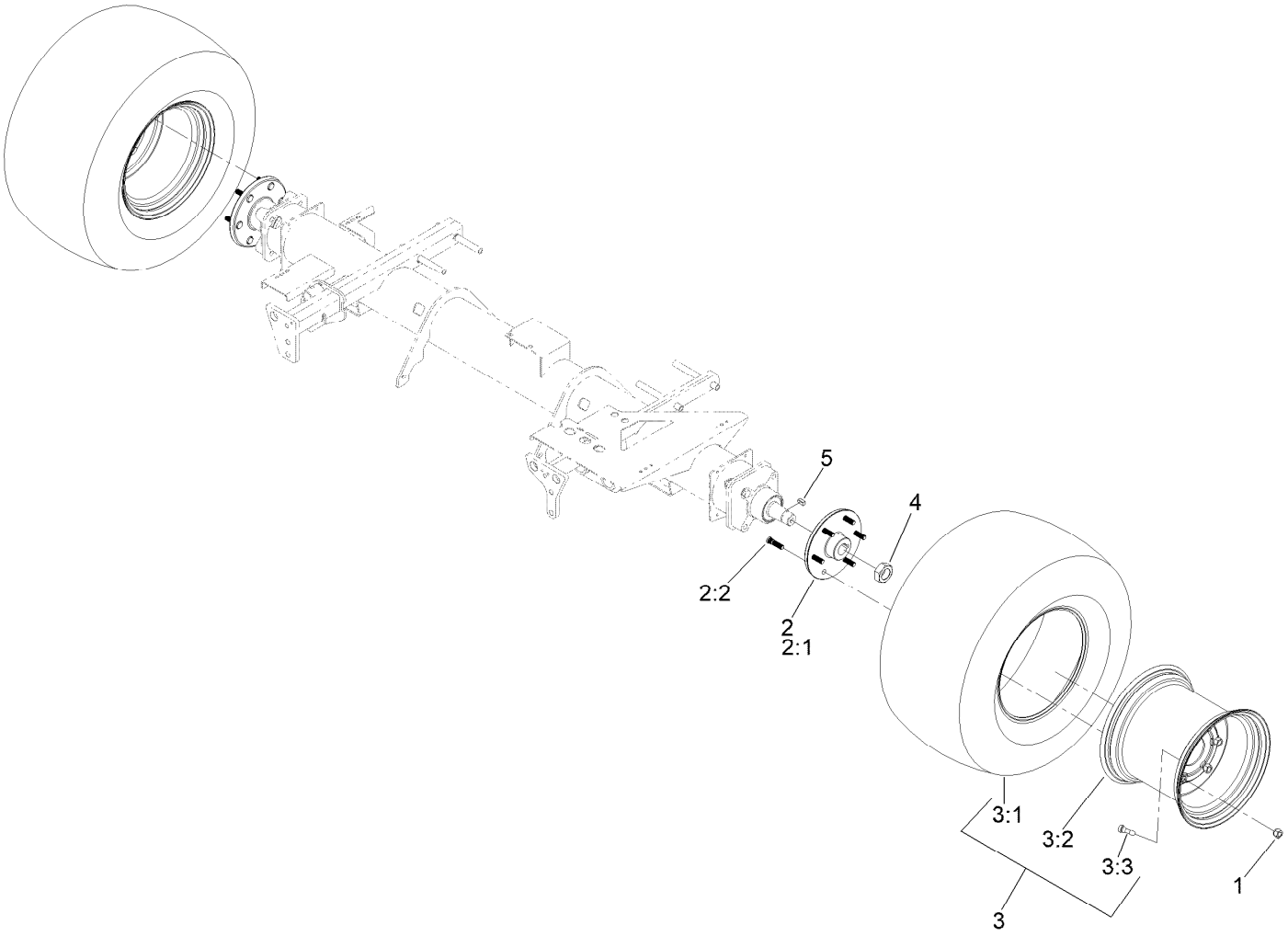


# Front Axle Assembly

| *Ref.* | *Part Number* | *Qty.* | *Description* |
|---|---|---|---|
| 1 | 139-2564 | 12 | Nut-Lug |
| 2 | 144-2058 | 2 | Hub ASM (1.50) |
| 2:1 | 136-7971 | 1 | Hub-Wheel |
| 2:2 | 114-3918 | 6 | Stud-Wheel |
| 3 | 139-6048 | 2 | Tire ASM |
| 3:1 | 133-2724 | 1 | Tire |
| 3:2 | 139-6049 | 1 | Wheel |
| 3:3 | 232-27 | 1 | Stem-Valve |
| 4 | 117-3290 | 2 | Nut-Hex |
| 5 | 117-5198 | 2 | Key-Square |

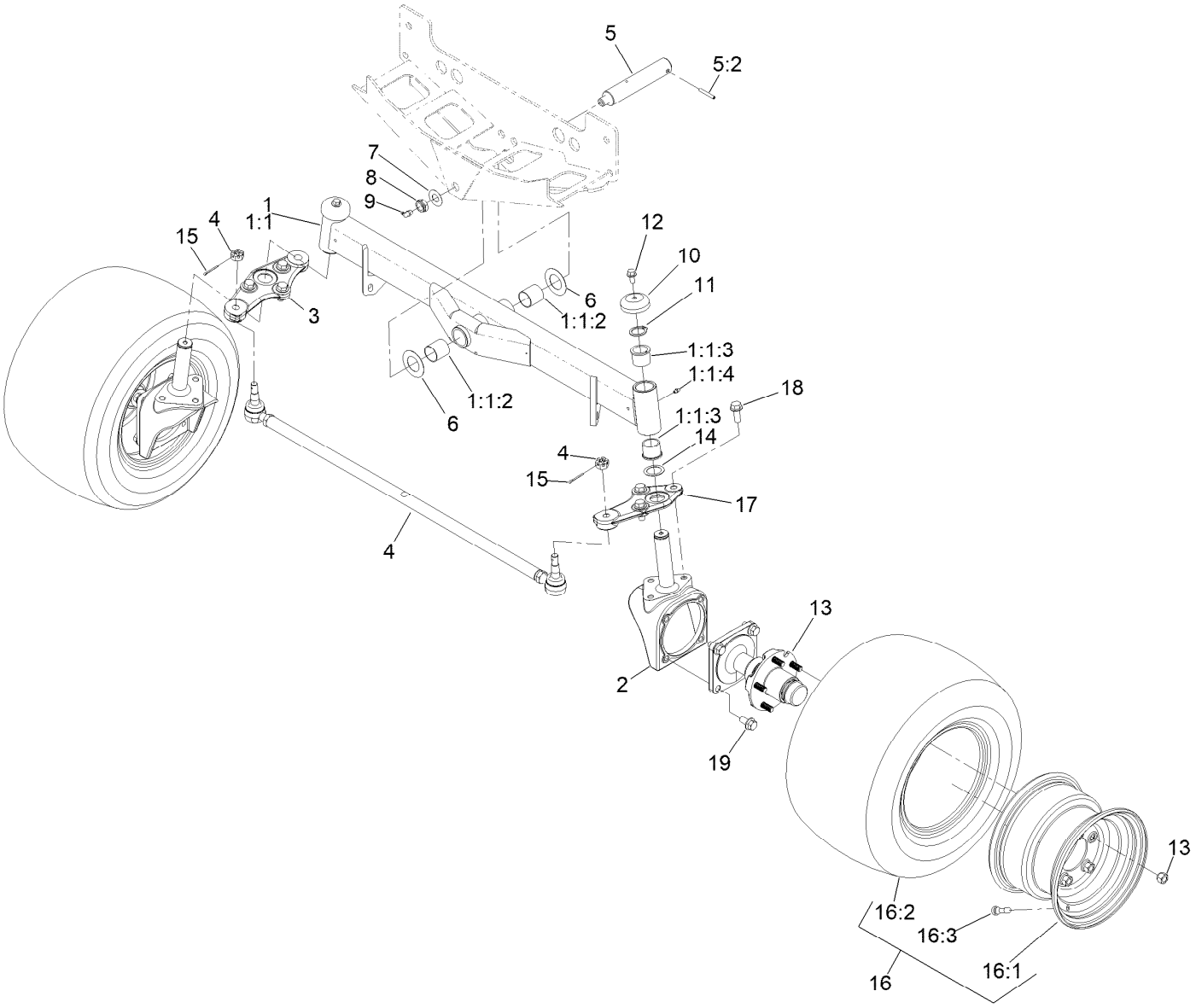


# Rear Axle Assembly

| Ref. | Part Number | Qty. | Description |
|---|---|---|---|
| 1 | 107-4546-03 | 1 | Axle ASM |
| 1:1 | | 1 | Axle ● |
| 1:1:2 | 99-6964 | 2 | Bushing-Axle |
| 1:1:3 | 104-0015 | 4 | Bushing-Flange |
| 1:1:4 | 302-5 | 2 | Fitting-Grease |
| 2 | 107-4517-03 | 2 | Housing-Motor |
| 3 | 140-3142 | 1 | Link-Drag, RH |
| 4 | 139-6029 | 1 | Tie Rod ASM |
| 5 | 140-6101 | 1 | Pin ASM-Axle Pivot |
| 5:2 | 32121-32 | 1 | Pin-Roll |
| 6 | 99-8432 | 2 | Washer-Thrust |
| 7 | 71-4540 | 1 | Washer-Thrust |
| 8 | 3296-15 | 1 | Nut-Lock, NI |
| 9 | 302-33 | 1 | Fitting-Grease |

| Ref. | Part Number | Qty. | Description |
|---|---|---|---|
| 10 | 69-8890 | 2 | Cap-Spindle |
| 11 | 32151-77 | 2 | Ring-Retaining, External |
| 12 | 3234-1 | 2 | Screw-HHF |
| 13 | 117-8961 | 2 | Hub And Spindle ASM |
| 14 | 76-2980 | 2 | Washer-Thrust |
| 15 | 3272-12 | 2 | Pin-Cotter |
| 16 | 117-0281 | 2 | Rim And Tire ASM |
| 16:1 | 117-0280 | 1 | Rim |
| 16:2 | 117-5125 | 1 | Tire |
| 16:3 | 232-27 | 1 | Stem-Valve |
| 17 | 140-3144 | 1 | Link-Drag, LH |
| 18 | 3234-38 | 6 | Screw-HHF |
| 19 | 3234-6 | 8 | Screw-HHF |

● Not serviced separately

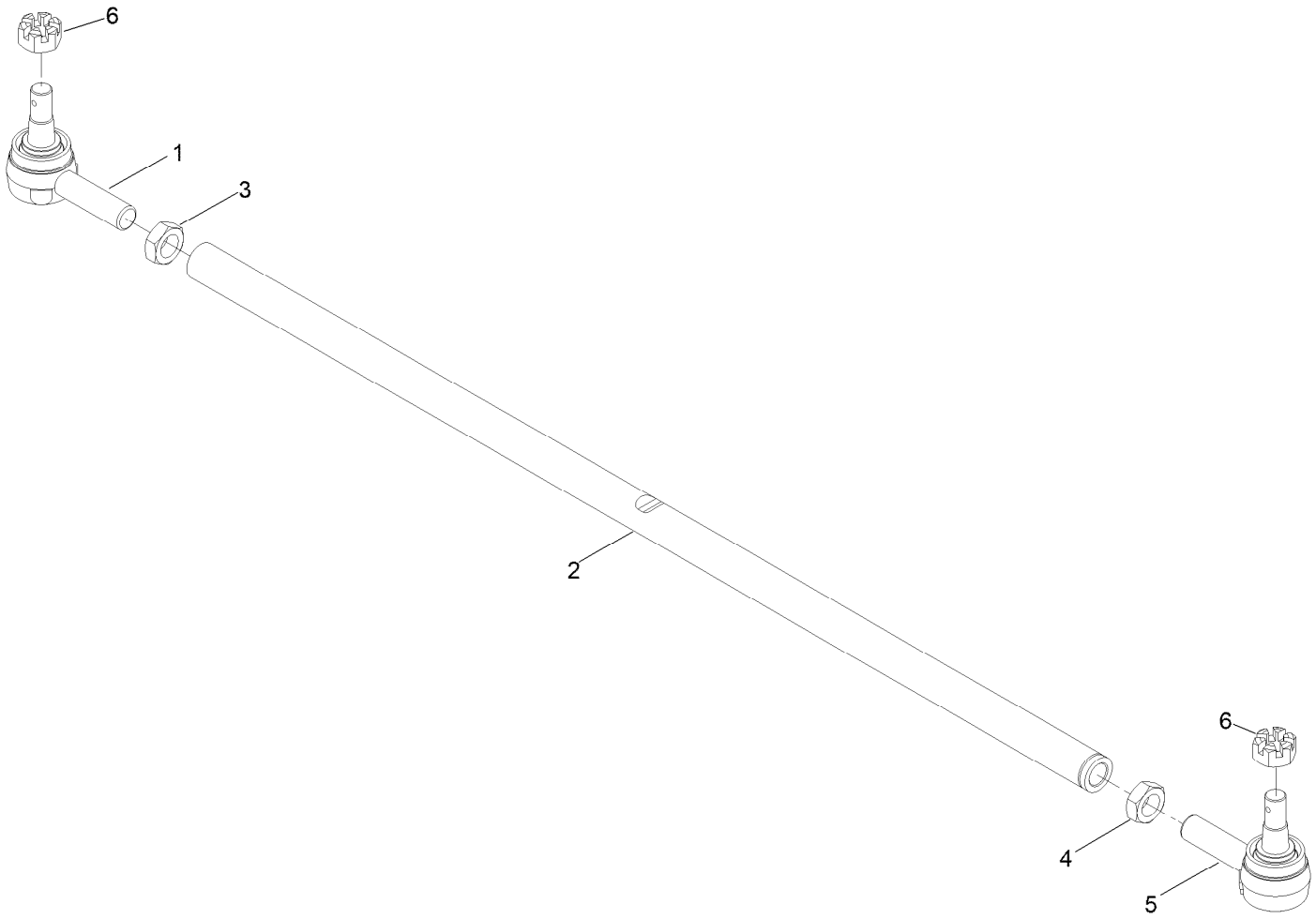


# Tie Rod Assembly No. 139-6029

| *Ref.* | *Part Number* | *Qty.* | *Description* |
|---|---|---|---|
| 1 | 144-3901 | 1 | Tie Rod End |
| 2 | 139-6030 | 1 | Rod-Tie |
| 3 | 84-5300 | 1 | Nut-Jam |
| 4 | 110-5337 | 1 | Nut-Jam |
| 5 | 144-3902 | 1 | Tie Rod End |
| 6 | 140-6135 | 2 | Nut-Hex, Slotted |

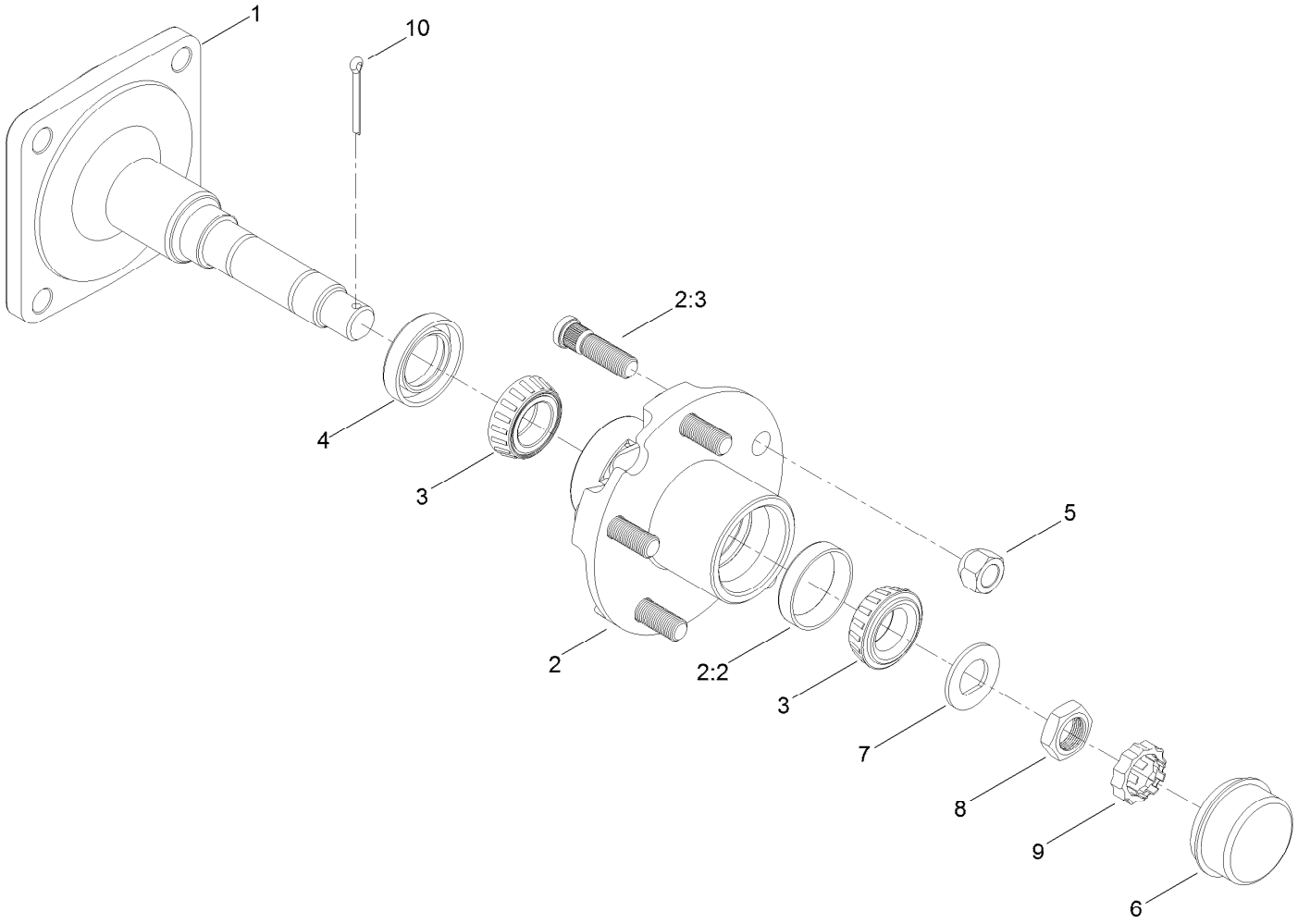


# Hub and Spindle Assembly No. 117-8961

| *Ref.* | *Part Number* | *Qty.* | *Description* |
|---|---|---|---|
| 1 | 117-8958 | 1 | Spindle |
| 2 | 117-8963 | 1 | Hub ASM |
| 2:2 | 254-72 | 2 | Bearing-Cup, Tapered |
| 2:3 | 114-3918 | 5 | Stud-Wheel |
| 3 | 254-94 | 2 | Bearing-Cone, Tapered |
| 4 | 112-1690 | 1 | Seal-Oil |
| 5 | 139-2564 | 5 | Nut-Lug |
| 6 | 241-119 | 1 | Cap-Dust |
| 7 | 117-8259 | 1 | Washer-Spindle |
| 8 | 117-8260 | 1 | Nut |
| 9 | 93-0307 | 1 | Nut-Lock, Retainer |
| 10 | 3272-18 | 1 | Pin-Cotter |

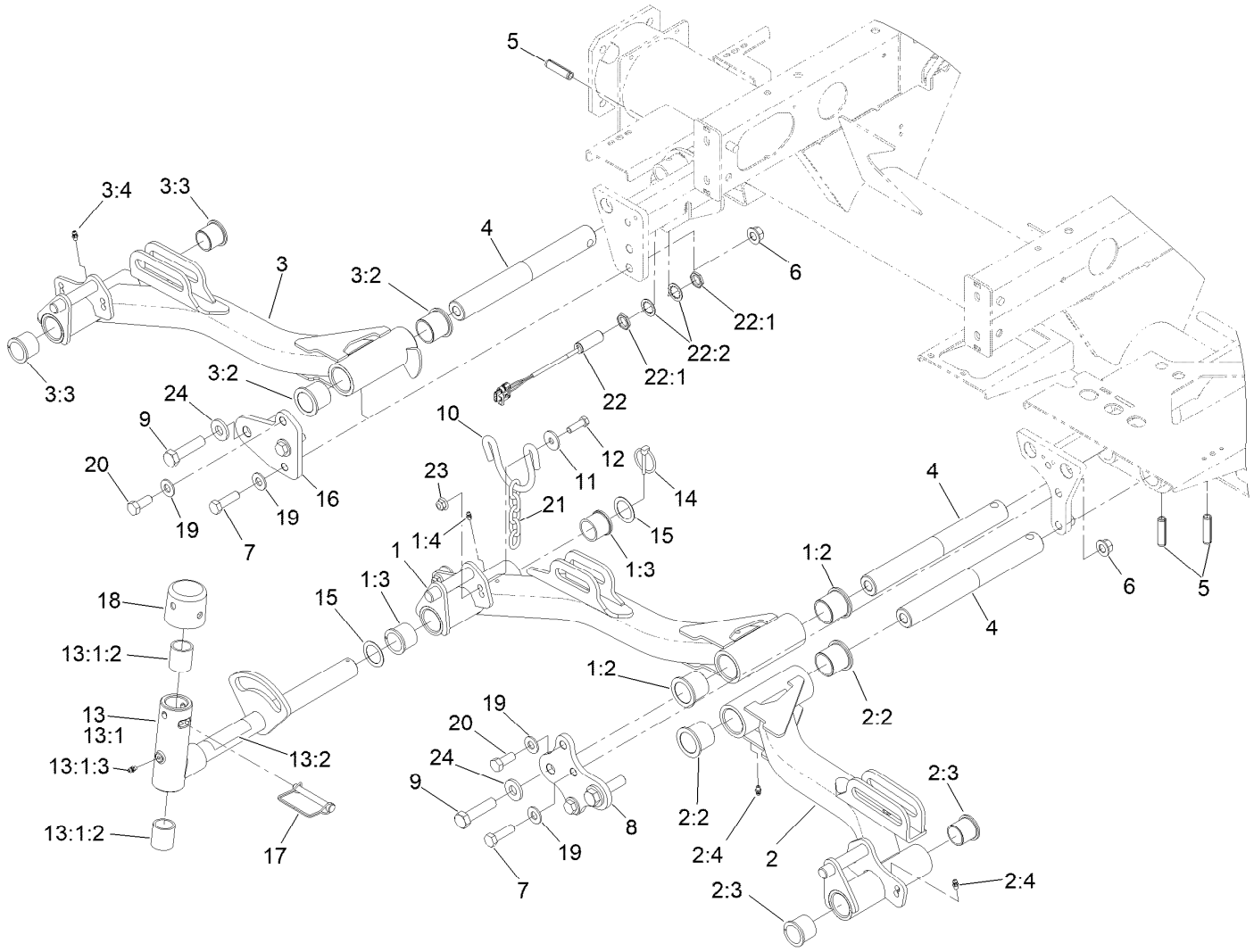


# No. 1, 4 and 5 Lift Arm Assembly

| Ref. | Part Number | Qty. | Description |
|---|---|---|---|
| 1 | 133-2911 | 1 | Lift Arm ASM #1 |
| 1:2 | 69-6470 | 2 | Bushing-Caster |
| 1:3 | 104-0015 | 2 | Bushing-Flange |
| 1:4 | 302-5 | 2 | Fitting-Grease |
| 2 | 133-2914 | 1 | Lift Arm ASM #4 |
| 2:2 | 69-6470 | 2 | Bushing-Caster |
| 2:3 | 104-0015 | 2 | Bushing-Flange |
| 2:4 | 302-5 | 2 | Fitting-Grease |
| 3 | 133-2915 | 1 | Lift Arm ASM #5 |
| 3:2 | 69-6470 | 2 | Bushing-Caster |
| 3:3 | 104-0015 | 2 | Bushing-Flange |
| 3:4 | 302-5 | 2 | Fitting-Grease |
| 4 | 117-0208 | 3 | Shaft-Pivot, Liftarm |
| 5 | 32121-122 | 3 | Pin-Roll |
| 6 | 99-5107 | 4 | Nut-Lock |
| 7 | 325-7 | 4 | Screw-HH |
| 8 | 117-5154-01 | 1 | Plate-Bridge 1 And 4 |
| 9 | 327-7 | 3 | Screw-HH |
| 10 | 110-0922 | 3 | Hoop-Chain |
| 11 | 63-8410 | 6 | Washer |
| 12 | 323-7 | 6 | Screw-HH |
| 13 | 138-1248 | 3 | Pivot Yoke ASM |
| 13:1 | | 1 | Yoke-Pivot ● |
| 13:1:2 | 121-3187 | 2 | Bushing |
| 13:1:3 | 302-5 | 1 | Fitting-Grease |
| 13:2 | 110-9642 | 1 | Decal-Warning |
| 14 | 92-1298 | 3 | Pin-Lynch |
| 15 | 76-2980 | 6 | Washer-Thrust |
| 16 | 117-5153-01 | 1 | Plate-Bridge 5 |
| 17 | 107-7400 | 3 | Pin-Lynch |
| 18 | 107-4027 | 3 | Cap |
| 19 | 87-7270 | 6 | Washer-Thrust |
| 20 | 325-5 | 2 | Screw-HH |
| 21 | 84-2451 | 3 | Chain-Straight, 5 Link |
| 22 | 115-5300 | 1 | Proximity Switch ASM |
| 22:1 | 117-3207 | 2 | Nut-Hex |

● Not serviced separately

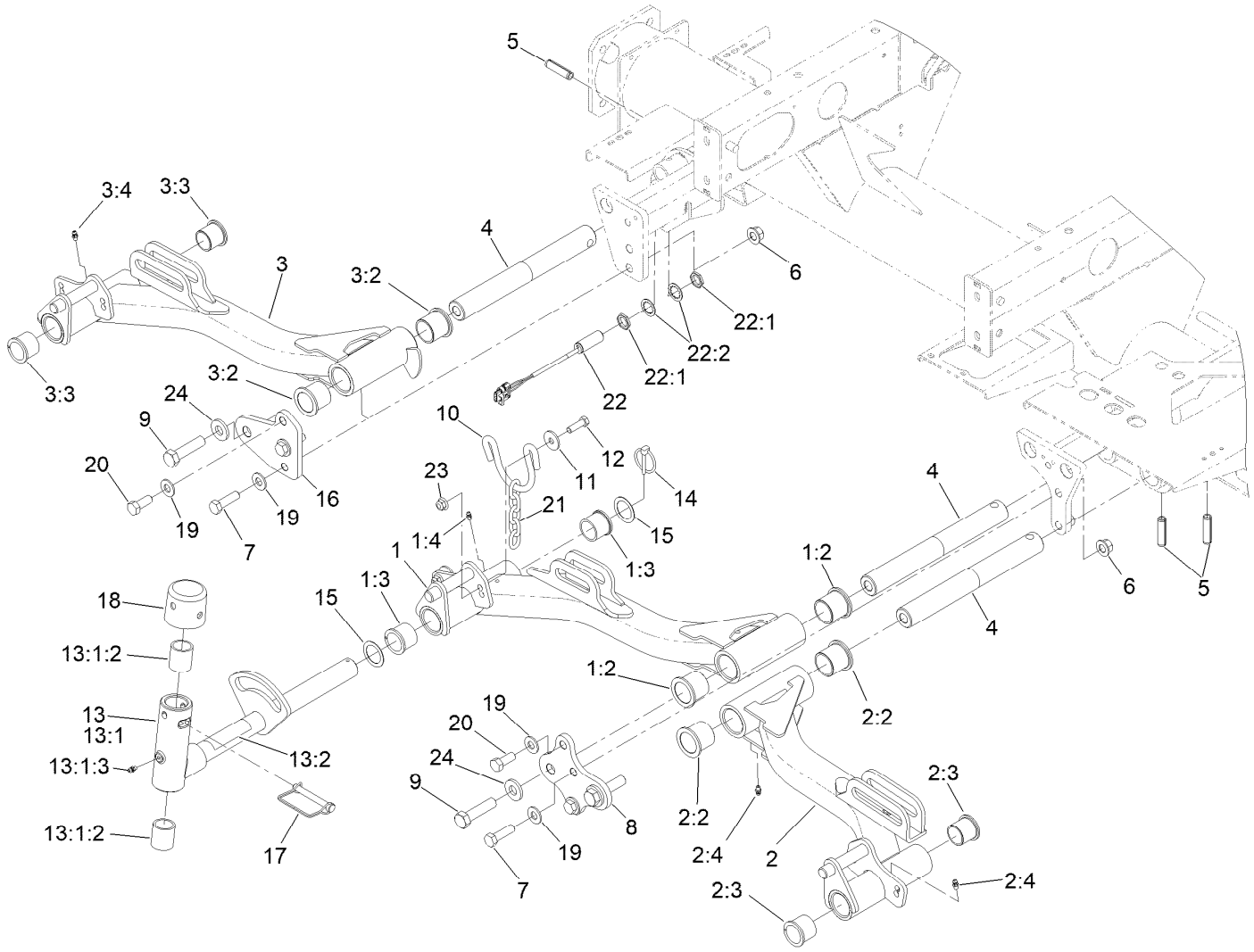


# No. 1, 4 and 5 Lift Arm Assembly (continued)

| Ref. | Part Number | Qty. | Description |
|---|---|---|---|
| 22:2 | 117-3208 | 2 | Washer-Lock, Internal Tooth |

| Ref. | Part Number | Qty. | Description |
|---|---|---|---|
| 23 | 104-8301 | 6 | Nut-HF, NI |
| 24 | 99-7667 | 3 | Washer-Flat |

● Not serviced separately

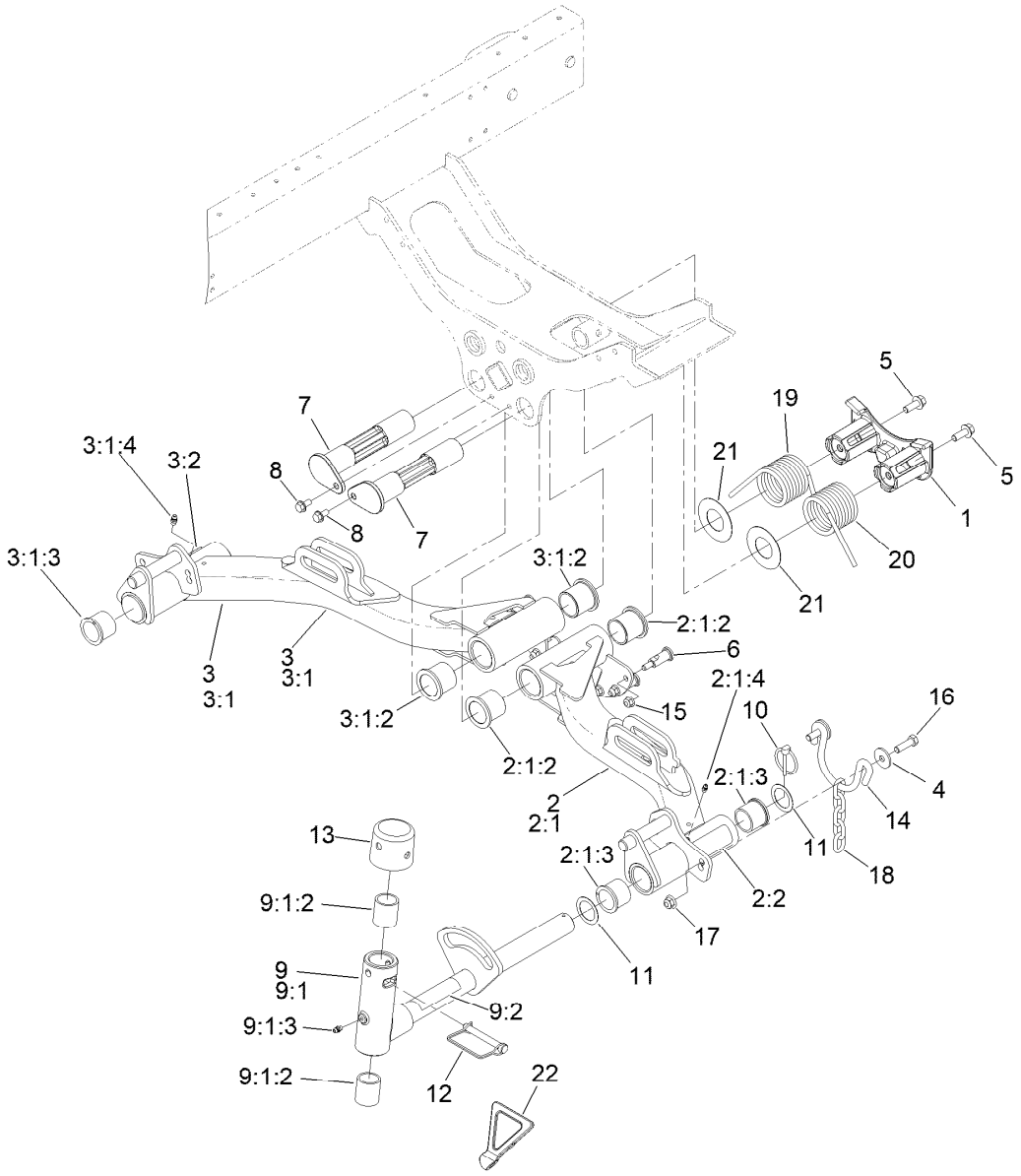


# No. 2 and 3 Lift Arm Assembly

| Ref. | Part Number | Qty. | Description |
|---|---|---|---|
| 1 | 125-2018 | 1 | Housing |
| 2 | 136-8002 | 1 | Lift Arm #2 |
| 2:1 | | 1 | Lift Arm ASM #2 ● |
| 2:1:2 | 69-6470 | 2 | Bushing-Caster |
| 2:1:3 | 104-0015 | 2 | Bushing-Flange |
| 2:1:4 | 302-5 | 2 | Fitting-Grease |
| 2:2 | 93-6696 | 1 | Decal-Warning |
| 3 | 136-8003 | 1 | Lift Arm #3 |
| 3:1 | | 1 | Lift Arm ASM #3 ● |
| 3:1:2 | 69-6470 | 2 | Bushing-Caster |
| 3:1:3 | 104-0015 | 2 | Bushing-Flange |
| 3:1:4 | 302-5 | 2 | Fitting-Grease |
| 3:2 | 93-6696 | 1 | Decal-Warning |
| 4 | 63-8410 | 4 | Washer |
| 5 | 3234-11 | 2 | Screw-HHF |
| 6 | 120-6283 | 6 | Stud-Shouldered |
| 7 | 125-2037 | 2 | Shaft |
| 8 | 32144-14 | 2 | Screw-HWHTF |

| Ref. | Part Number | Qty. | Description |
|---|---|---|---|
| 9 | 138-1248 | 2 | Pivot Yoke ASM |
| 9:1 | | 1 | Yoke-Pivot ● |
| 9:1:2 | 121-3187 | 2 | Bushing |
| 9:1:3 | 302-5 | 1 | Fitting-Grease |
| 9:2 | 110-9642 | 1 | Decal-Warning |
| 10 | 92-1298 | 2 | Pin-Lynch |
| 11 | 76-2980 | 4 | Washer-Thrust |
| 12 | 107-7400 | 2 | Pin-Lynch |
| 13 | 107-4027 | 2 | Cap |
| 14 | 110-0922 | 2 | Hoop-Chain |
| 15 | 104-8300 | 6 | Nut-HF, NI |
| 16 | 323-7 | 4 | Screw-HH |
| 17 | 104-8301 | 4 | Nut-HF, NI |
| 18 | 84-2451 | 2 | Chain-Straight, 5 Link |
| 19 | 99-5608-03 | 1 | Spring-Torsion, RH |
| 20 | 99-5609-03 | 1 | Spring-Torsion, LH |
| 21 | 110-5345 | 2 | Washer |
| 22 | 119-8010-03 | 1 | Kickstand |

● Not serviced separately

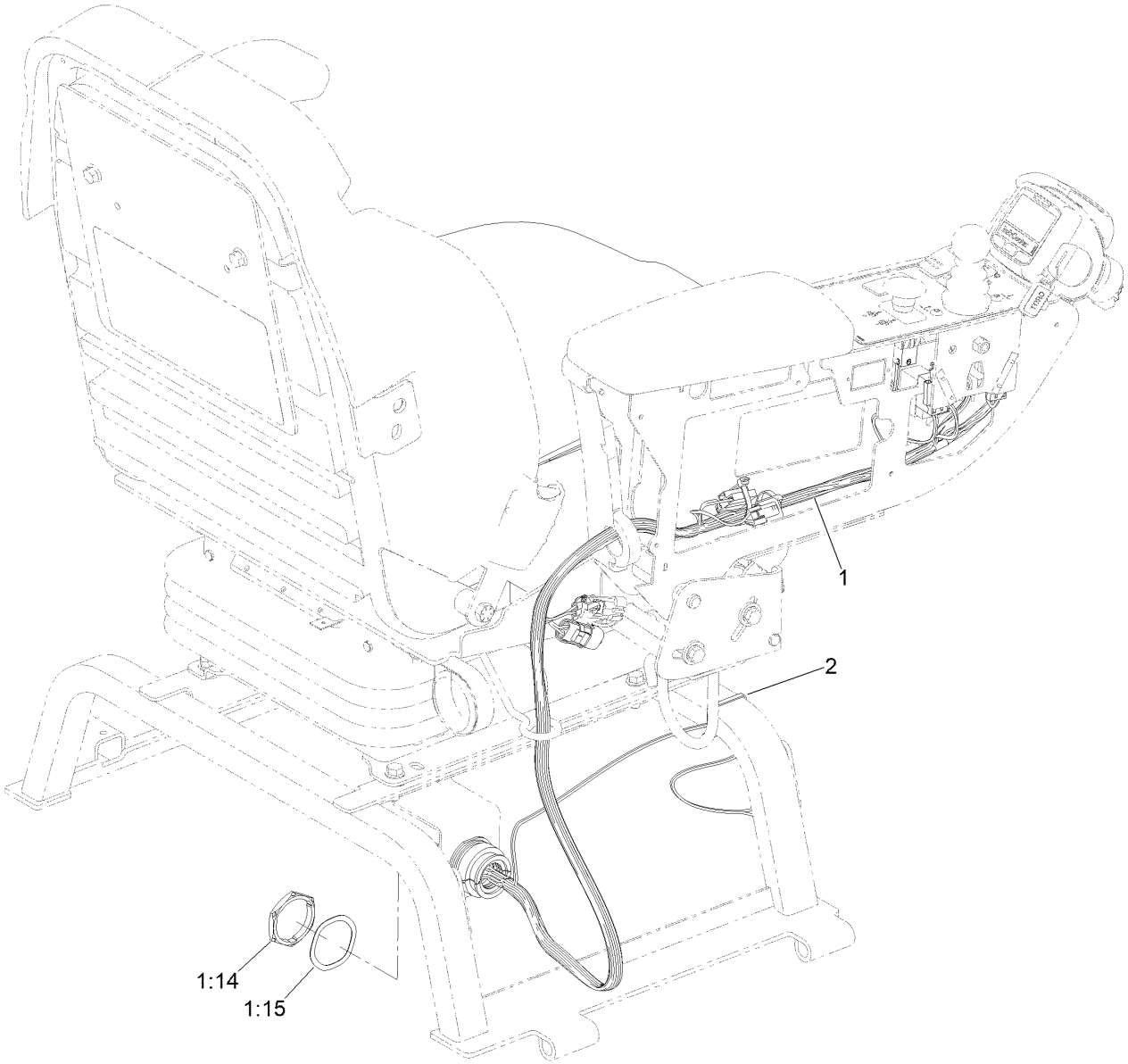


# Seat and Control Arm Wiring Harness Assembly

| *Ref.* | *Part Number* | *Qty.* | *Description* |
|---|---|---|---|
| 1 | 122-2126 | 1 | Harness-Wire, Seat |
| 1:14 | 32180-135 | 1 | Nut-Connector |
| 1:15 | 32180-143 | 1 | Washer-Lock |
| 2 | 3290-378 | 2 | Tie-Cable |

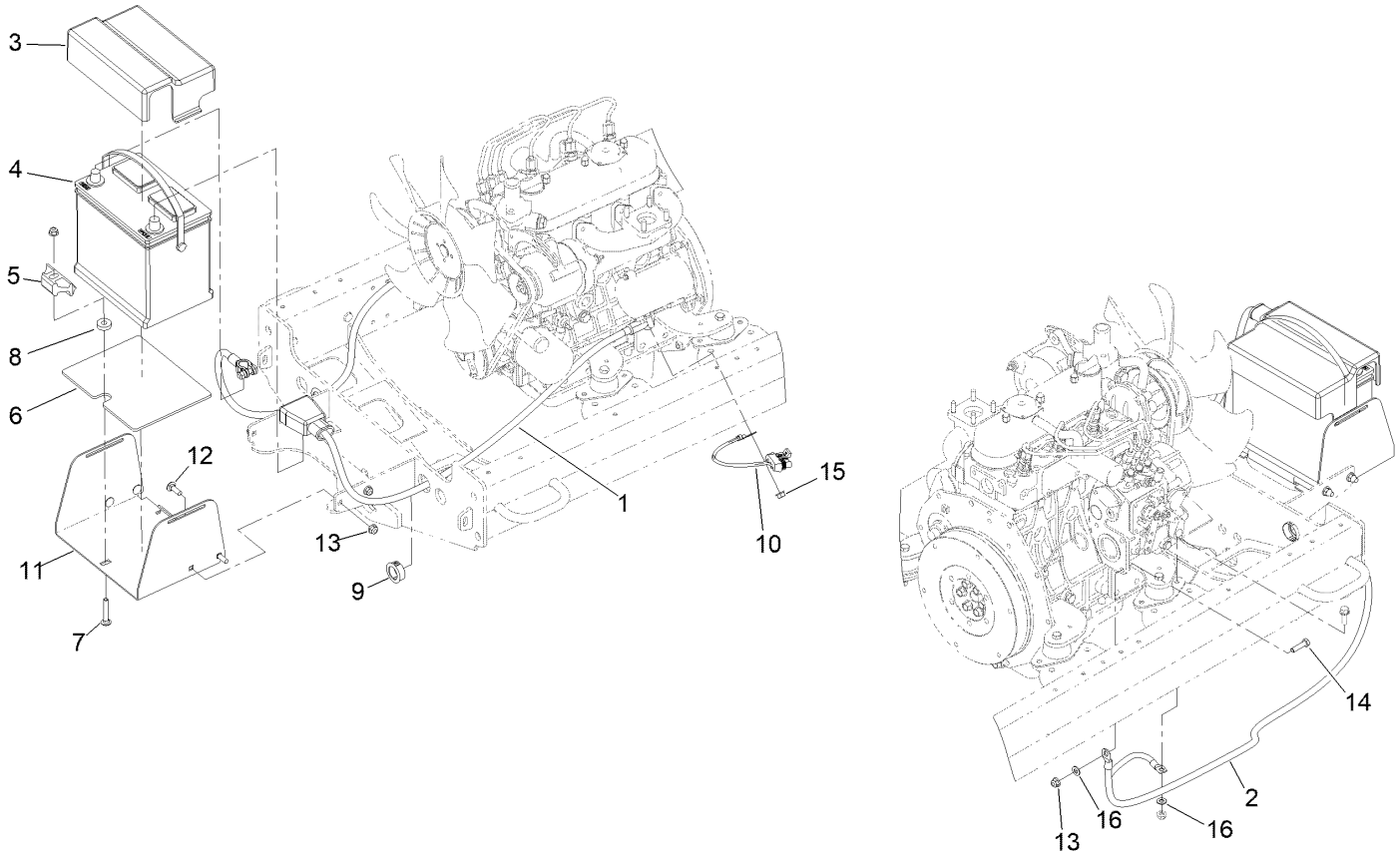


# Battery Electrical Assembly

| Ref. | Part Number | Qty. | Description |
|---|---|---|---|
| 1 | 120-6398 | 1 | Cable-Battery, Positive |
| 2 | 120-6399 | 1 | Cable-Battery, Negative |
| 3 | 121-5615 | 1 | Cover-Battery |
| 4 | 132-8621 | 1 | Battery - Corrosive |
| 5 | 138-6335 | 1 | Retainer-Battery |
| 6 | 127-2781 | 1 | Mat-Battery |
| 7 | 3230-6 | 1 | Bolt-CARR |
| 8 | 62-6660 | 1 | Spacer |

| Ref. | Part Number | Qty. | Description |
|---|---|---|---|
| 9 | 32180-570 | 2 | Bushing-Panel Snap,1.00" |
| 10 | 99-3441 | 1 | Harness-Wire, Fusible Link |
| 11 | 125-1583-03 | 1 | Tray-Battery |
| 12 | 3230-2 | 4 | Bolt-CARR |
| 13 | 104-8300 | 6 | Nut-HF, NI |
| 14 | 322-6 | 1 | Screw-HH |
| 15 | 33004-00 | 1 | Nut-HF |
| 16 | 120-9683 | 2 | Washer-Plain |

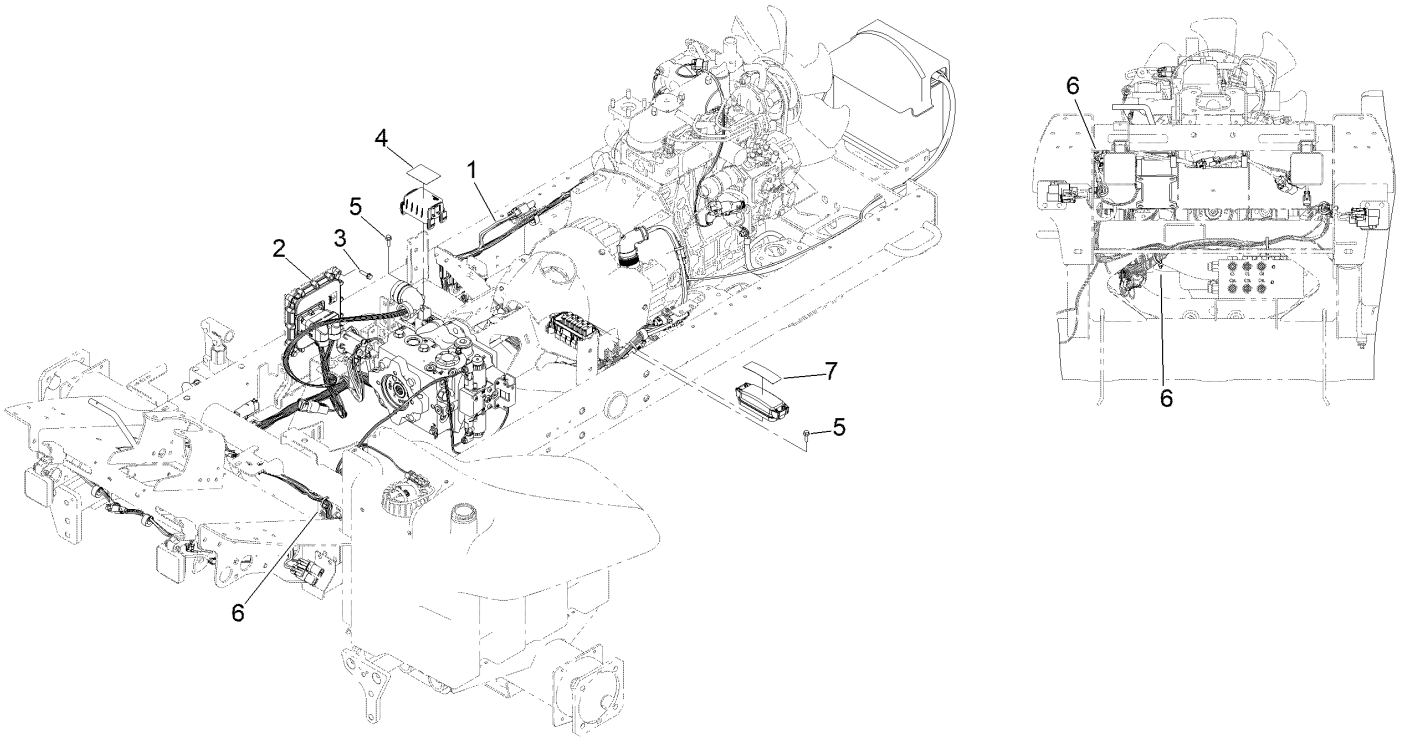


# Electrical Assembly

| *Ref.* | *Part Number* | *Qty.* | *Description* |
|---|---|---|---|
| 1 | 122-2913 | 1 | Harness-Wire, Main |
| 2 | 127-2770 | 1 | Controller |
| 3 | 32144-86 | 4 | Screw-HWHTF |
| 4 | 145-2498 | 1 | Decal-Fuse |
| 5 | 33103-020 | 4 | Screw-HHF |
| 6 | 3290-378 | 3 | Tie-Cable |
| 7 | 127-2470 | 1 | Decal-Fuses, Cu |

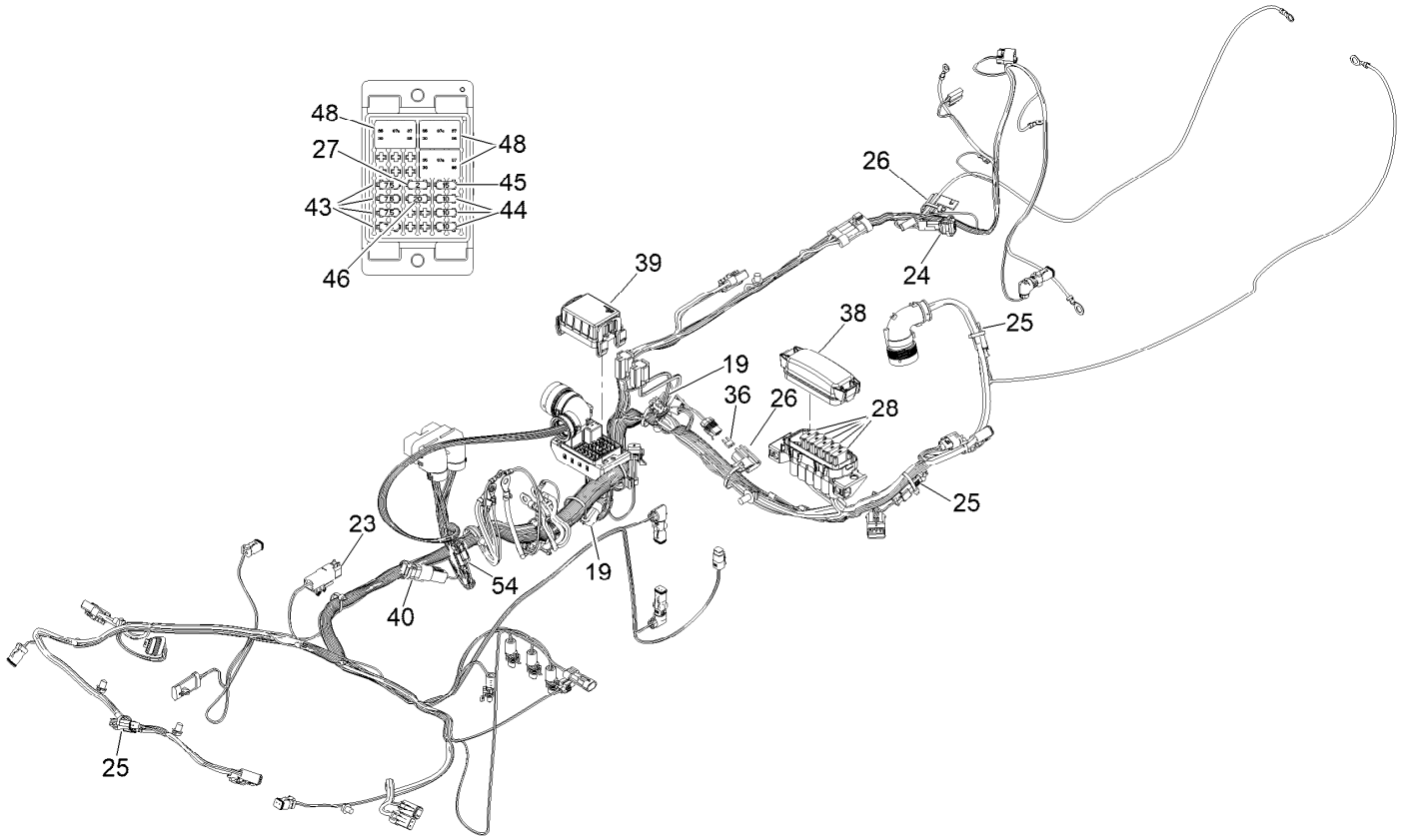


# Wire Harness Assembly No. 122-2913

| *Ref.* | *Part Number* | *Qty.* | *Description* |
|---|---|---|---|
| 19 | 32180-156 | 3 | Cap-Plug, 6 Way |
| 23 | 119-7781 | 1 | Diode-Sealed |
| 24 | 100-4918 | 1 | Diode |
| 25 | 32180-282 | 3 | Resistor-120 Ohm |
| 26 | 32180-019 | 2 | Cover-Fuse, Single |
| 27 | 121-8861 | 1 | Fuse-Mini Blade, 2 Amp |
| 28 | 122-0255 | 5 | Fuse-Maxi, 35 Amp-58V |
| 36 | 122-0409 | 1 | Fuse-Mini Blade, 10 Amp |
| 38 | 32180-146 | 1 | Cover-Fuse |

| *Ref.* | *Part Number* | *Qty.* | *Description* |
|---|---|---|---|
| 39 | 32180-471 | 1 | Cover-Chief, Bric |
| 40 | 122-1131 | 1 | Capacitor-Sealed |
| 43 | 121-8865 | 4 | Fuse-Mini Blade, 7.5 Amp |
| 44 | 121-8866 | 3 | Fuse-Mini Blade, 10 Amp |
| 45 | 121-8867 | 1 | Fuse-Mini Blade, 15 Amp |
| 46 | 121-8868 | 1 | Fuse-Mini Blade, 20 Amp |
| 48 | 122-0368 | 3 | Relay-280 ISO |
| 54 | 32180-091 | 1 | Cap-Dust, 2 Way |

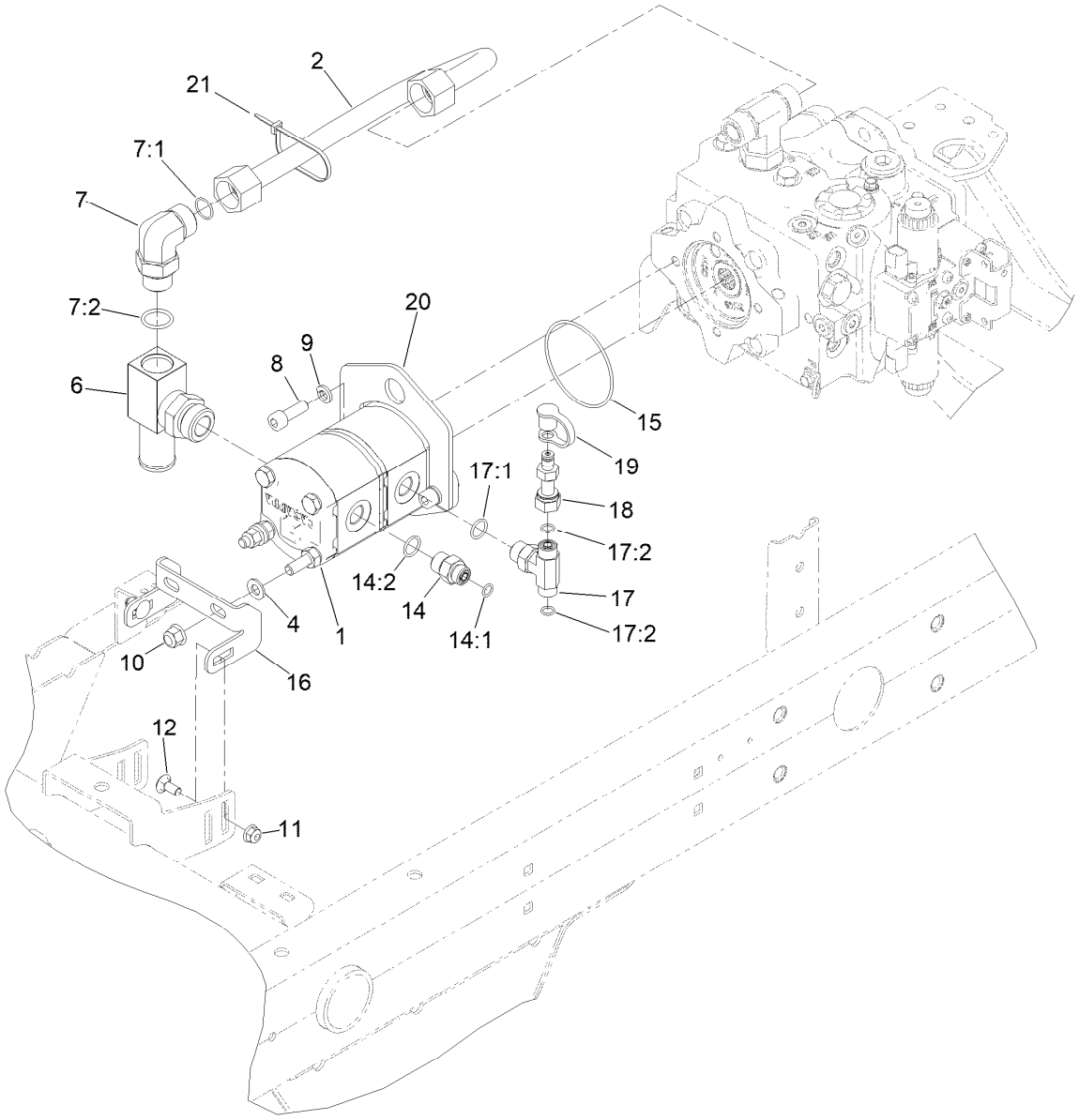


# Gear Pump Assembly

| Ref. | Part Number | Qty. | Description |
|---|---|---|---|
| 1 | 125-1530 | 1 | Tandem Gear Pump ASM |
| 2 | 145-2556 | 1 | Hydraulic Tube ASM |
| 4 | 3256-24 | 2 | Washer-Plain |
| 6 | 145-2557 | 1 | Manifold-Tube |
| 7 | 340-142 | 1 | Fitting-Elbow, 90 DEG |
| 7:1 | 237-58 | 1 | O-Ring |
| 7:2 | 237-81 | 1 | O-Ring |
| 8 | ST80801 | 2 | Screw-HSH |
| 9 | 48-9590 | 2 | Washer-Lock |
| 10 | 103-9511 | 2 | Nut-Flg |
| 11 | 104-8300 | 2 | Nut-HF, NI |
| 12 | 3230-1 | 2 | Bolt-CARR |

| Ref. | Part Number | Qty. | Description |
|---|---|---|---|
| 14 | 340-3 | 1 | Fitting-Straight |
| 14:1 | 237-22 | 1 | O-Ring |
| 14:2 | 237-79 | 1 | O-Ring |
| 15 | 237-161 | 1 | O-Ring |
| 16 | 133-2946-0P | 1 | Brkt-Gear Pump |
| 17 | 92-4799 | 1 | Fitting-Tee, HYD |
| 17:1 | 237-79 | 1 | O-Ring |
| 17:2 | 237-22 | 2 | O-Ring |
| 18 | 86-5480 | 1 | Nipple-Test |
| 19 | 354-79 | 1 | Cap-Dust |
| 20 | 145-2548-0P | 1 | Bracket-Lift, Pump |
| 21 | 3290-378 | 1 | Tie-Cable |

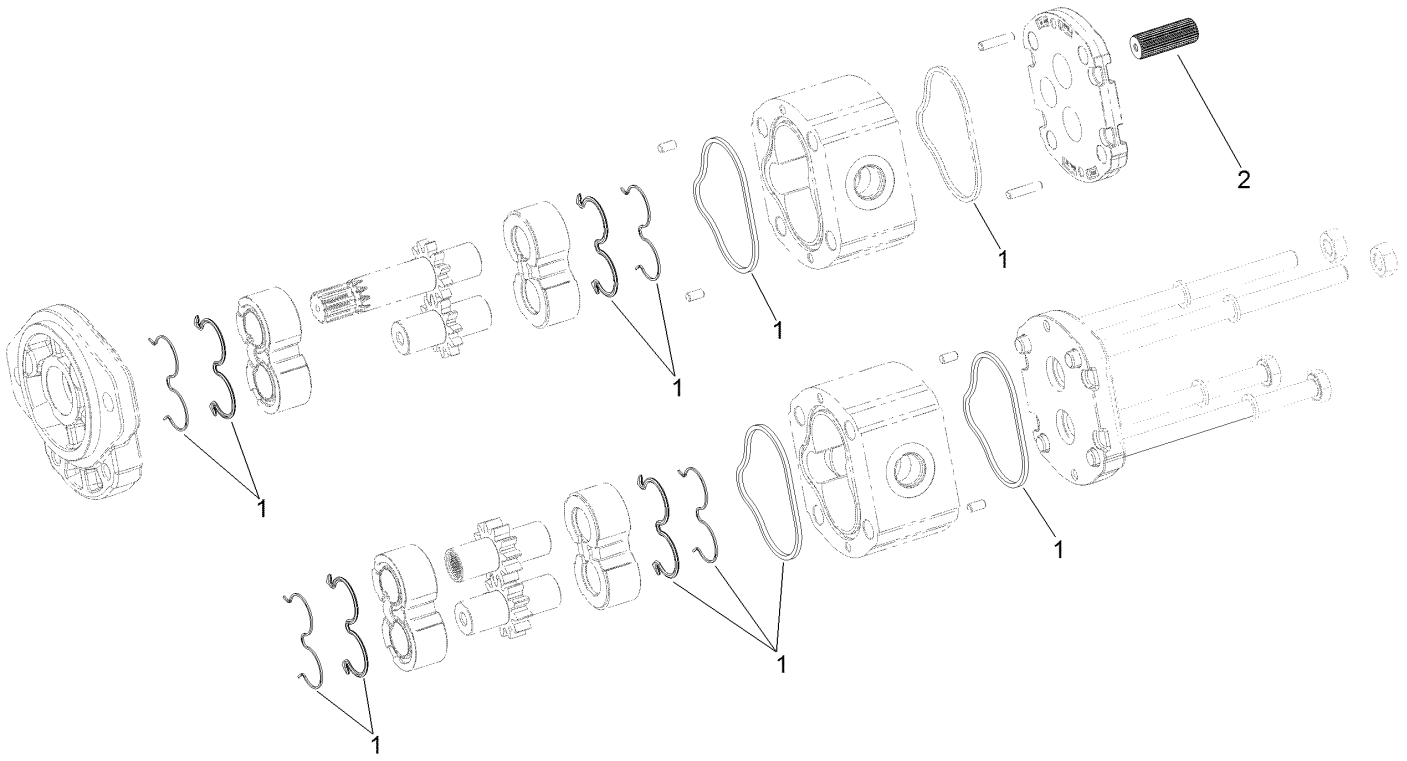


# Tandem Gear Pump Assembly No. 125-1530

| *Ref.* | *Part Number* | *Qty.* | *Description* |
|---|---|---|---|
| 1 | 120-5155 | 1 | Seal Kit |
| 2 | 120-6284 | 1 | Hub-Connecting |

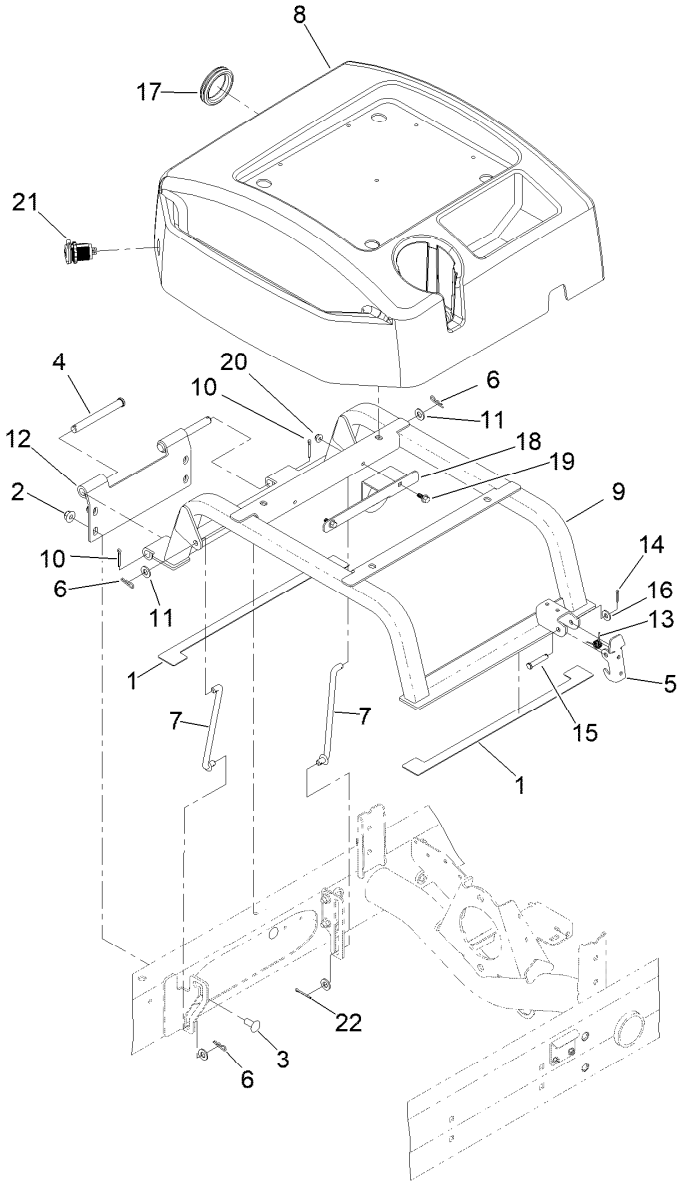


# Seat Base Assembly

| Ref. | Part Number | Qty. | Description |
|---|---|---|---|
| 1 | 110-5255 | 2 | Bumper-Base, Seat |
| 2 | 104-8301 | 4 | Nut-HF, NI |
| 3 | 3231-27 | 4 | Screw-CARR |
| 4 | 283-83 | 2 | Pin-Clevis |
| 5 | 110-8971 | 1 | Latch |
| 6 | 3290-307 | 3 | Pin-Cotter |
| 7 | 98-0917 | 2 | Rod-Prop |
| 8 | 145-2450 | 1 | Cover-Seatbase |
| 9 | 125-2122-03 | 1 | Seat Base ASM |
| 10 | 3272-11 | 2 | Pin-Cotter |
| 11 | 3256-24 | 4 | Washer-Plain |

| Ref. | Part Number | Qty. | Description |
|---|---|---|---|
| 12 | 125-2121-03 | 1 | Hinge-Seatbase |
| 13 | 104-4821 | 1 | Spring-Torsion |
| 14 | 3272-6 | 1 | Pin-Cotter |
| 15 | 94-3829 | 1 | Pin-Clevis |
| 16 | 3256-2 | 1 | Washer-Flat |
| 17 | 240-12 | 1 | Grommet-Rubber |
| 18 | 145-2480-0P | 1 | Bracket-Harness |
| 19 | 99-6810 | 2 | Screw-HHF |
| 20 | 104-7201 | 2 | Nut-HF, NI |
| 21 | 131-8388 | 1 | Socket-USB |
| 22 | 3272-4 | 1 | Pin-Cotter |

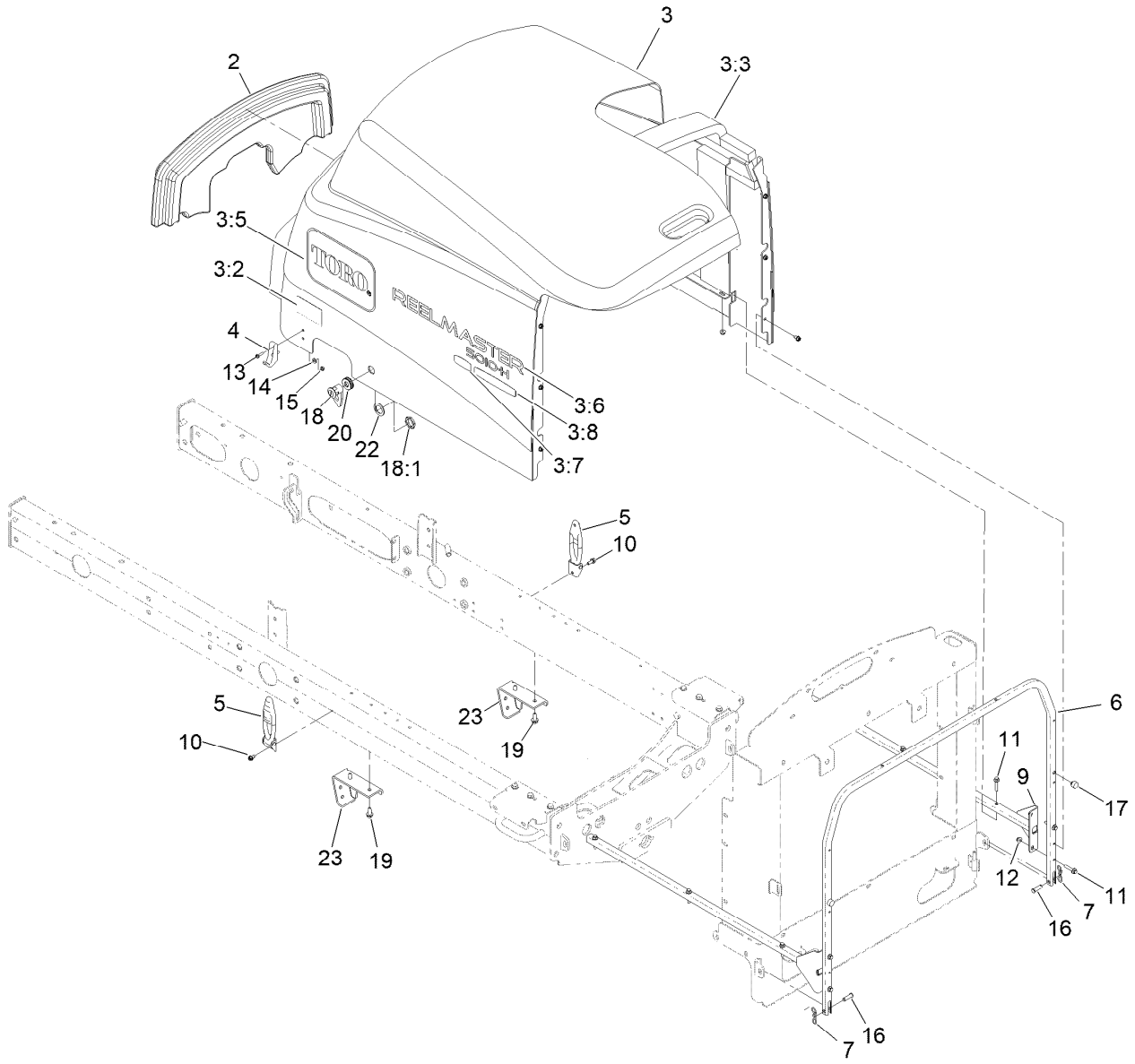


# Hood Assembly

| Ref. | Part Number | Qty. | Description |
|---|---|---|---|
| 2 | 145-2456 | 1 | Saddle-Hood |
| 3 | 145-2536 | 1 | Hood ASM (Rm5010-H Service) |
| 3:2 | 106-6754 | 2 | Decal-Danger |
| 3:3 | 110-5252 | 1 | Foam-Sealed |
| 3:4 | 110-9002 | 1 | Foil Tape Kit ● |
| 3:5 | 66-6140 | 2 | Decal |
| 3:6 | 127-2304 | 2 | Decal |
| 3:7 | 119-7580 | 2 | Decal-Smart, Energy |
| 3:8 | 121-1594 | 2 | Decal-Smart Power |
| 4 | 103-2897 | 2 | Latch-Catch |
| 5 | 103-2898 | 2 | Latch-Rubber |
| 6 | 125-8819-03 | 1 | Tube-Frame, Hood |
| 7 | 105-7512 | 2 | Pin-Tie, Bow |
| 9 | 108-1790-03 | 2 | Tube |
| 10 | 32104-17 | 8 | Screw-HWH |
| 11 | 3234-21 | 10 | Screw-HHF |
| 12 | 104-7201 | 10 | Nut-HF, NI |
| 13 | 32105-13 | 4 | Screw-HWH |
| 14 | 3256-14 | 4 | Washer-Flat |
| 15 | 3296-12 | 4 | Nut-Lock, NI |
| 16 | 283-61 | 2 | Pin-Yoke |
| 17 | 107-8042 | 2 | Bumper-Rubber |
| 18 | 98-5398 | 1 | Latch |
| 18:1 | 3218-20 | 1 | Nut-Jam ● |
| 19 | 32104-32 | 4 | Screw-HWH |
| 20 | 104-1453 | 1 | Grommet |
| 22 | 99-4958 | 1 | Spacer |
| 23 | 110-0979-03 | 2 | Bracket-Deflector |

● Not illustrated

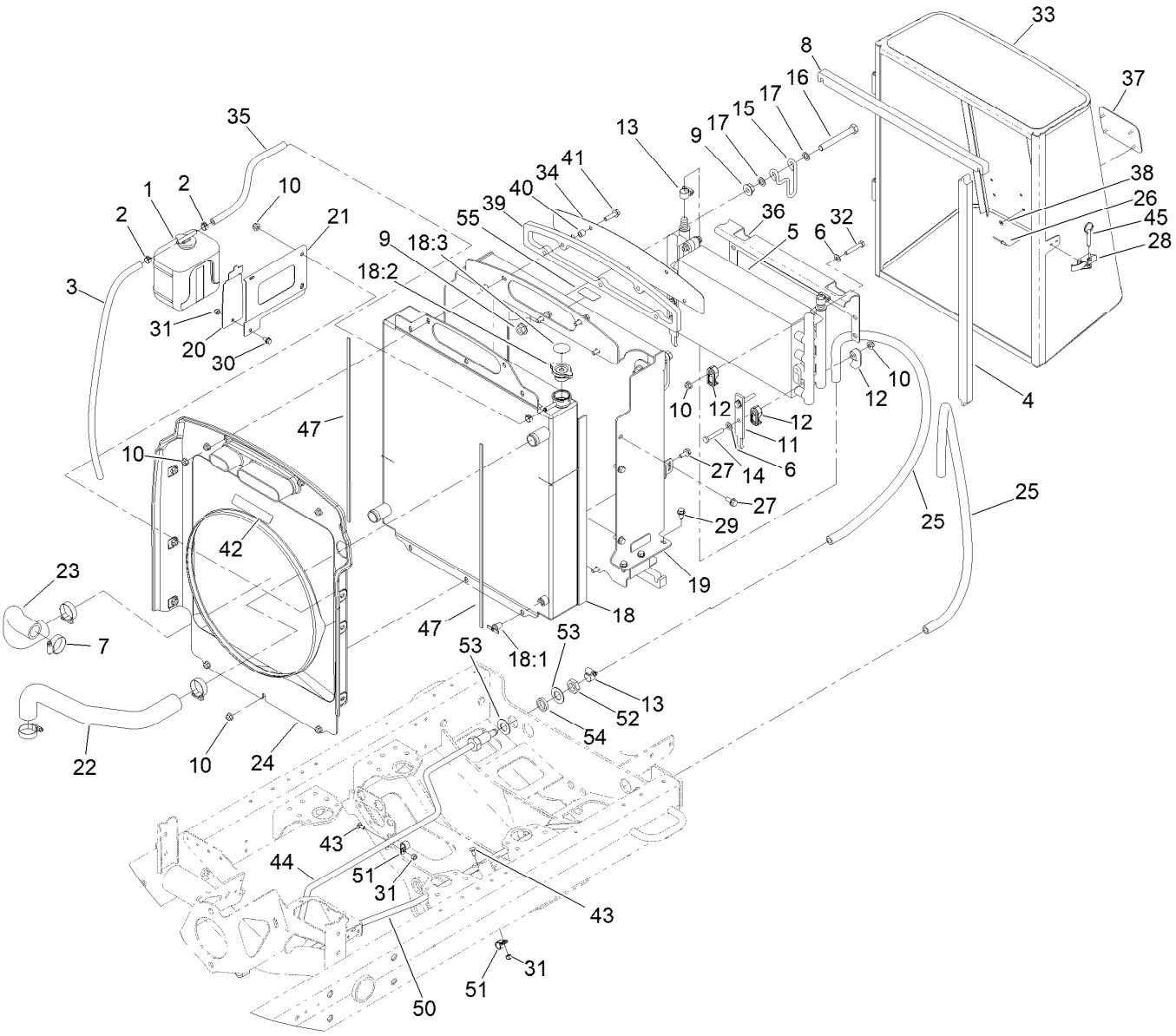


# Radiator Assembly

| Ref. | Part Number | Qty. | Description |
|---|---|---|---|
| 1 | 108-0638 | 1 | Bottle-Overflow |
| 2 | 92-2379 | 3 | Clamp-Hose |
| 3 | 110-3257 | 1 | Hose-Fuel |
| 4 | 110-0967 | 2 | Seal-Foam |
| 5 | 127-2480 | 1 | Cooler-Oil |
| 6 | 3256-23 | 8 | Washer-Plain |
| 7 | 2412-3 | 4 | Clamp-Hose |
| 8 | 110-0968 | 2 | Seal-Foam |
| 9 | 32128-49 | 4 | Nut-HHF |
| 10 | 104-8300 | 22 | Nut-HF, NI |
| 11 | 104-5460-03 | 2 | Plate-Mount, Oil Cooler |
| 12 | 105-3943 | 16 | Clamp-Cooler, Oil |
| 13 | 2412-119 | 4 | Clamp-Hose |
| 14 | 322-10 | 4 | Screw-HH |
| 15 | 104-5429 | 2 | Clamp-Form, Wire |
| 16 | 325-17 | 2 | Screw-HH |
| 17 | 41-8440 | 4 | Washer |
| 18 | 119-6956 | 1 | Radiator ASM |
| 18:1 | 304-46 | 1 | Draincock |
| 18:2 | 93-5957 | 1 | Cap-Radiator |
| 18:3 | 106-6755 | 1 | Decal-Cap, Radiator |

| Ref. | Part Number | Qty. | Description |
|---|---|---|---|
| 19 | 127-2665-03 | 1 | Frame-Support, Radiator |
| 20 | 108-1665-0P | 1 | Bracket - Reservior |
| 21 | 108-1666-0P | 1 | Bracket - Reservoir |
| 22 | 108-1696 | 1 | Hose-Formed |
| 23 | 108-1697 | 1 | Hose-Formed |
| 24 | 127-2474 | 1 | Shroud-Fan |
| 25 | 127-2346 | 2 | Hose |
| 26 | 3269-15 | 2 | Rivet-Pop |
| 27 | 3234-5 | 9 | Screw-HHF |
| 28 | 115-1554 | 1 | Latch-Draw |
| 29 | 32104-32 | 6 | Screw-HWH |
| 30 | 3234-13 | 1 | Screw-HHF |
| 31 | 3296-42 | 3 | Nut-Lock, NI |
| 32 | 322-21 | 4 | Screw-HH |
| 33 | 110-0952-03 | 1 | Screen ASM |
| 34 | 108-1843-0P | 1 | Screen - Air Intake |
| 35 | 110-4104 | 1 | Hose-Fuel |
| 36 | 107-2043-03 | 1 | Bracket-Oil Cooler, Top |
| 37 | 93-6028 | 1 | Plate-Logo |
| 38 | 138-6996 | 4 | Nut-Push |
| 39 | 110-5324 | 1 | Seal-Foam |

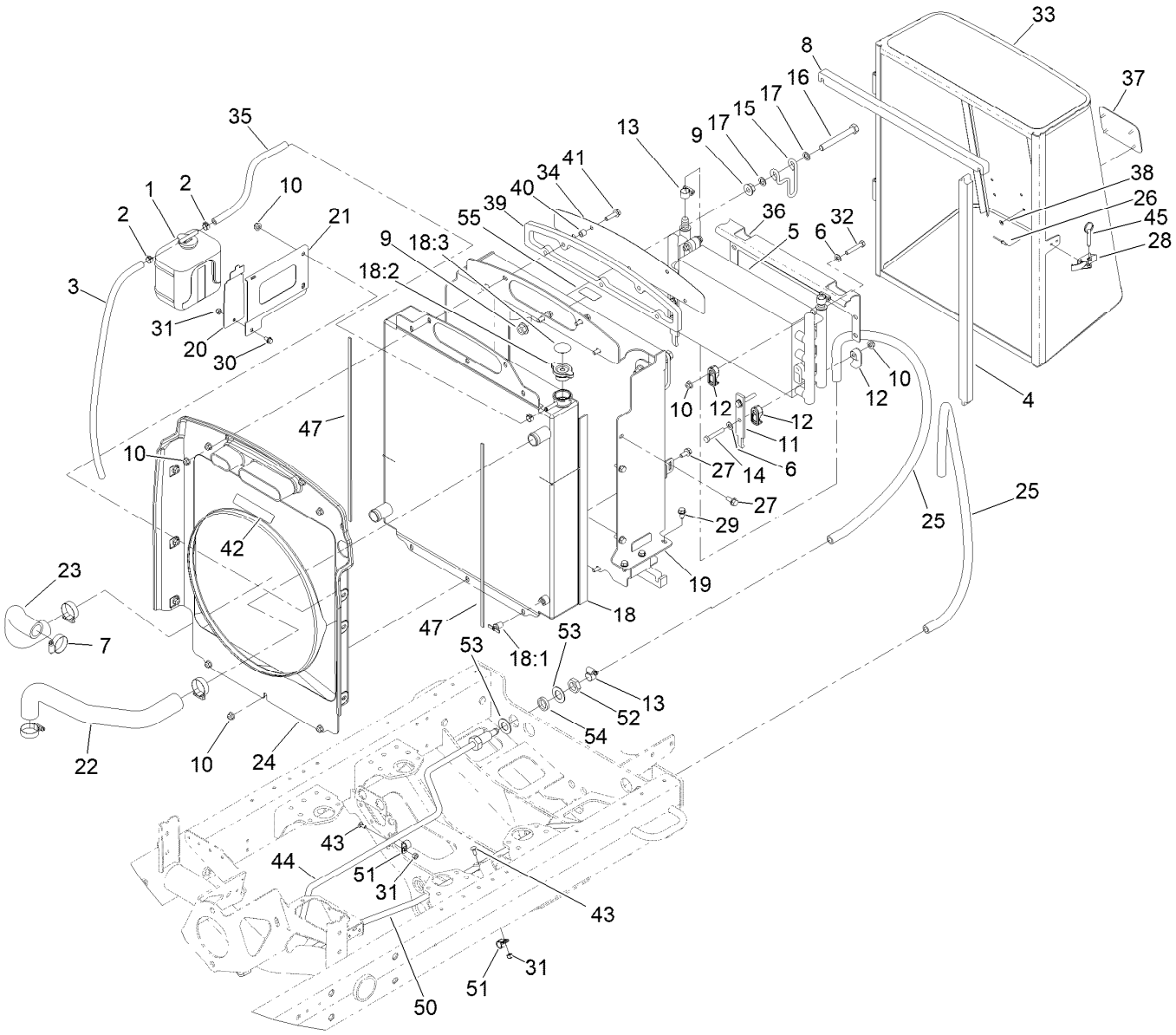


# Radiator Assembly (continued)

| Ref. | Part Number | Qty. | Description |
|---|---|---|---|
| 40 | 1-603903 | 5 | Spacer |
| 41 | 3234-36 | 5 | Screw-HHF |
| 42 | 93-7272 | 1 | Decal-Warning |
| 43 | 3229-11 | 2 | Screw-CARR |
| 44 | 145-2571 | 1 | Hydraulic Tube ASM |
| 45 | 115-1556 | 1 | Pin-Ball, Detent |
| 47 | 110-0971 | 2 | Seal-Foam |

| Ref. | Part Number | Qty. | Description |
|---|---|---|---|
| 50 | 127-2475 | 1 | Tube ASM |
| 51 | 2412-73 | 2 | Clamp-R |
| 52 | 340-127 | 2 | Nut-Bulkhead |
| 53 | 69-8930 | 4 | Washer |
| 54 | 127-2344 | 2 | Spacer |
| 55 | 137-8127 | 1 | Decal-No Spray |

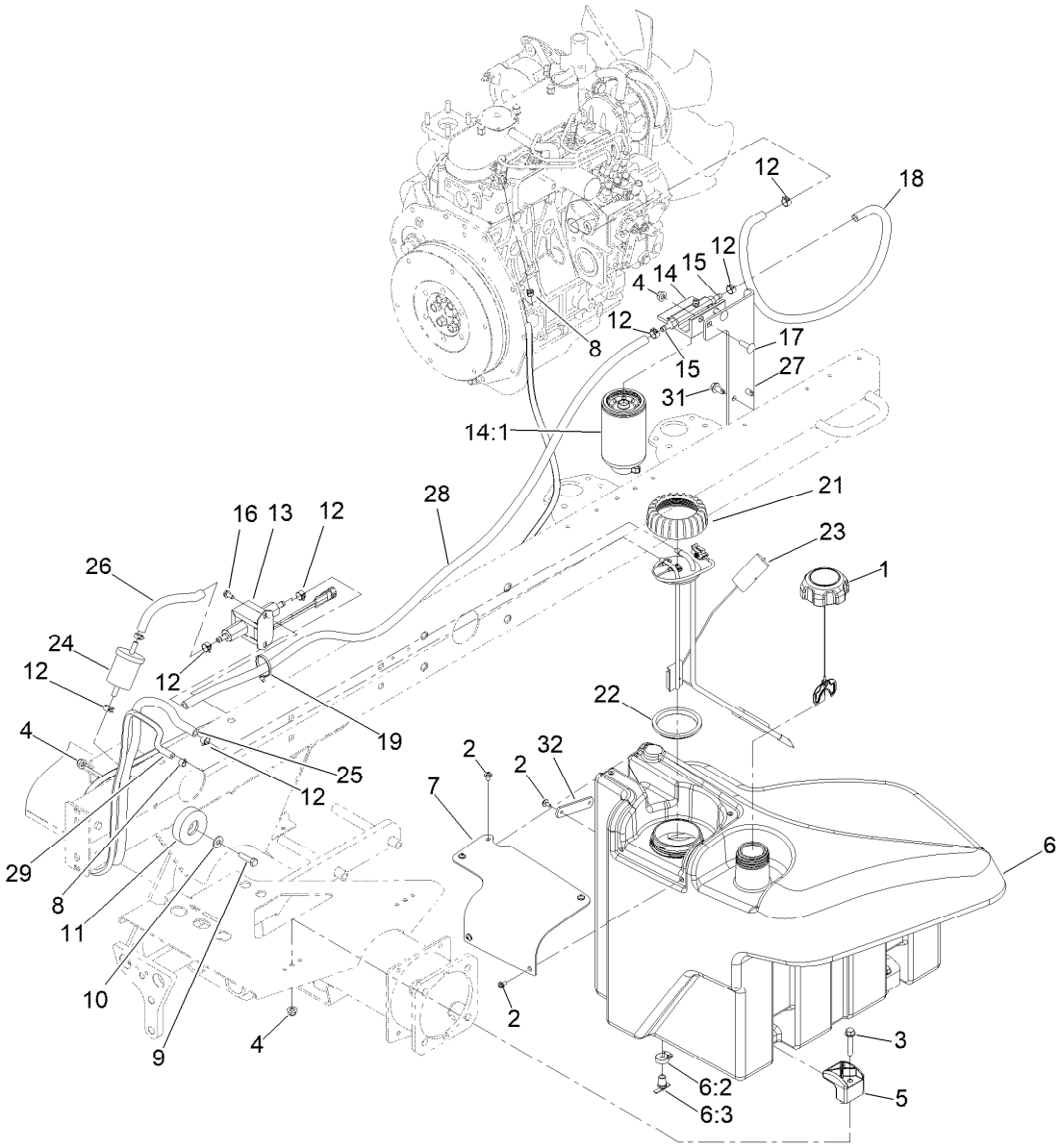


# Fuel System Assembly

| Ref. | Part Number | Qty. | Description |
|---|---|---|---|
| 1 | 117-5894 | 1 | Fuel Cap ASM |
| 2 | 109-2661 | 7 | Screw-PPH |
| 3 | 94-5780 | 2 | Screw-HWH |
| 4 | 104-8300 | 5 | Nut-HF, NI |
| 5 | 107-4543 | 2 | Clamp |
| 6 | 125-2907 | 1 | Fuel Tank ASM |
| 6:2 | 2412-36 | 1 | Clamp-Hose |
| 6:3 | 304-46 | 1 | Draincock |
| 7 | 125-2903 | 1 | Cover-Pump/Sender |
| 8 | 2412-80 | 2 | Clamp-Hose |
| 9 | 322-6 | 1 | Screw-HH |
| 10 | 3256-3 | 1 | Washer-Flat |
| 11 | 108-1605 | 1 | Bumper-Recess |
| 12 | 92-2379 | 8 | Clamp-Hose |
| 13 | 145-3160 | 1 | Pump-Fuel, Electric |
| 14 | 110-9044 | 1 | Separator-Filter |
| 14:1 | 110-9049 | 1 | Filter-Spin On, Fuel/Water |

| Ref. | Part Number | Qty. | Description |
|---|---|---|---|
| 15 | 353-783 | 2 | Fitting-STR |
| 16 | 32144-4 | 2 | Screw-HWH |
| 17 | 3230-22 | 2 | Screw-CARR |
| 18 | 109-0309 | 1 | Hose-Fuel |
| 19 | 3290-378 | 3 | Tie-Cable |
| 21 | 140-6245 | 1 | Cap-Pump, Fuel |
| 22 | 140-6246 | 1 | Gasket-Pump, Fuel, |
| 23 | 121-5642 | 1 | Sender-Fuel |
| 24 | 98-7612 | 1 | Filter-Fuel |
| 25 | 110-3257 | 1 | Hose-Fuel |
| 26 | 112-2386 | 1 | Hose-Fuel |
| 27 | 110-8968-0P | 1 | Mount-Water Separator |
| 28 | 138-4714 | 1 | Hose-Fuel |
| 29 | 125-8808 | 1 | Hose-Fuel |
| 31 | 32104-32 | 4 | Screw-HWH |
| 32 | 125-2945 | 1 | Strap-Cable |

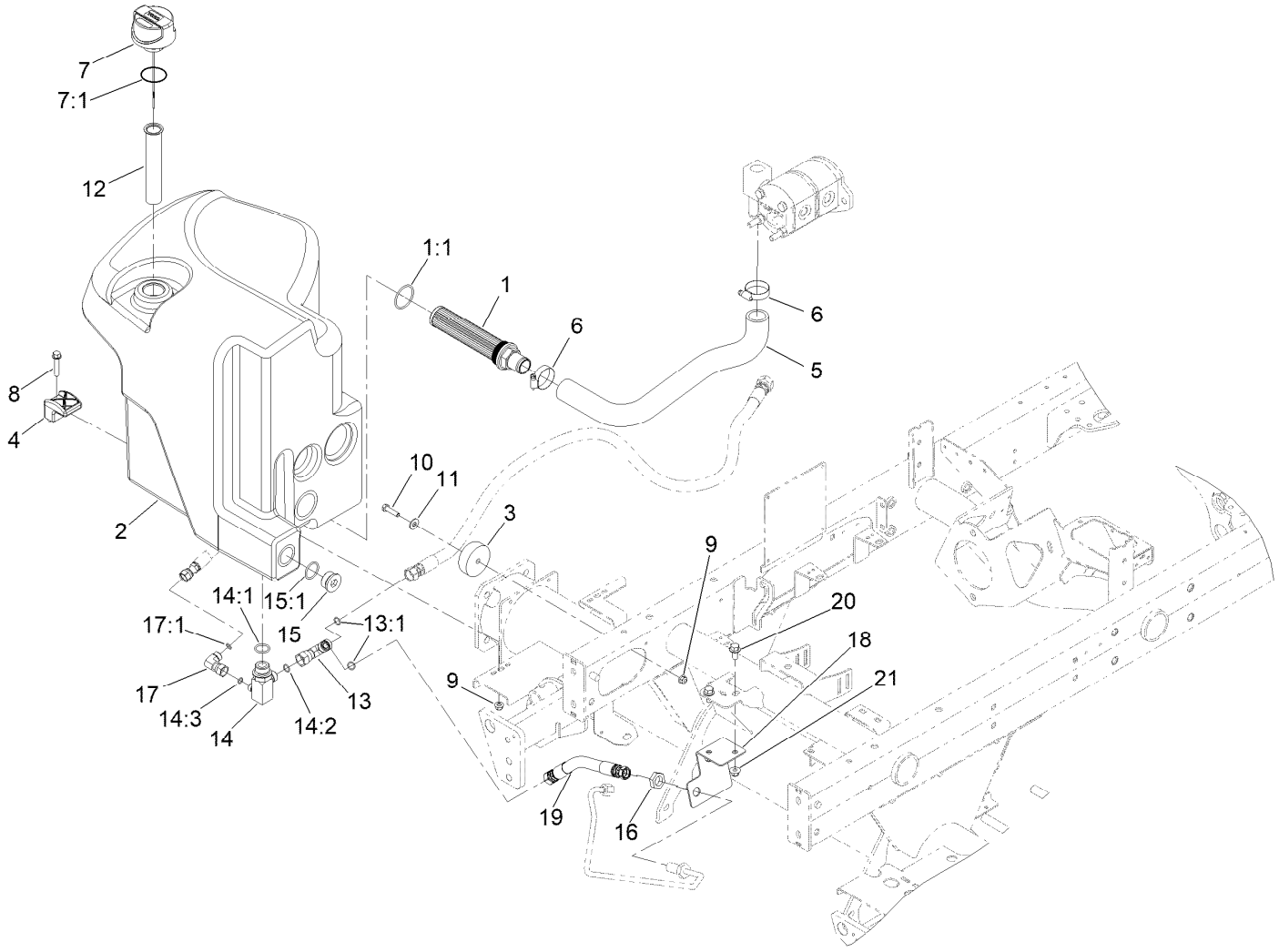


# Hydraulic Tank Assembly

| Ref. | Part Number | Qty. | Description |
|---|---|---|---|
| 1 | 145-2463 | 1 | Strainer-Tank, Hydraulic |
| 1:1 | 340-136 | 1 | O-Ring |
| 2 | 145-2487 | 1 | Tank-Hydraulic |
| 3 | 108-1605 | 1 | Bumper-Recess |
| 4 | 107-4543 | 2 | Clamp |
| 5 | 144-2076 | 1 | Hose-Suction |
| 6 | 2412-3 | 2 | Clamp-Hose |
| 7 | 117-0193 | 1 | Cap-Hydraulic, Vented Breather |
| 7:1 | 237-101 | 1 | O-Ring |
| 8 | 94-5780 | 2 | Screw-HWH |
| 9 | 104-8300 | 3 | Nut-HF, NI |
| 10 | 322-6 | 1 | Screw-HH |
| 11 | 3256-3 | 1 | Washer-Flat |
| 12 | 61-2790 | 1 | Filter-Screen |

| Ref. | Part Number | Qty. | Description |
|---|---|---|---|
| 13 | 340-104 | 1 | Fitting-Tee |
| 13:1 | 237-30 | 2 | O-Ring |
| 14 | 144-2080 | 1 | Fitting-Manifold |
| 14:1 | 237-81 | 1 | O-Ring |
| 14:2 | 237-30 | 1 | O-Ring |
| 14:3 | 237-22 | 1 | O-Ring |
| 15 | 105-3921 | 1 | Fitting-Plug |
| 15:1 | 237-146 | 1 | O-Ring |
| 16 | 340-70 | 1 | Nut-Lock |
| 17 | 340-159 | 1 | Elbow-90 |
| 17:1 | 237-22 | 2 | O-Ring |
| 18 | 145-2496-0P | 1 | Bracket-Bulkhead, Return |
| 19 | 145-2488 | 1 | Hose ASM-Hydraulic |
| 20 | 3234-1 | 2 | Screw-HHF |
| 21 | 104-8301 | 2 | Nut-HF, NI |

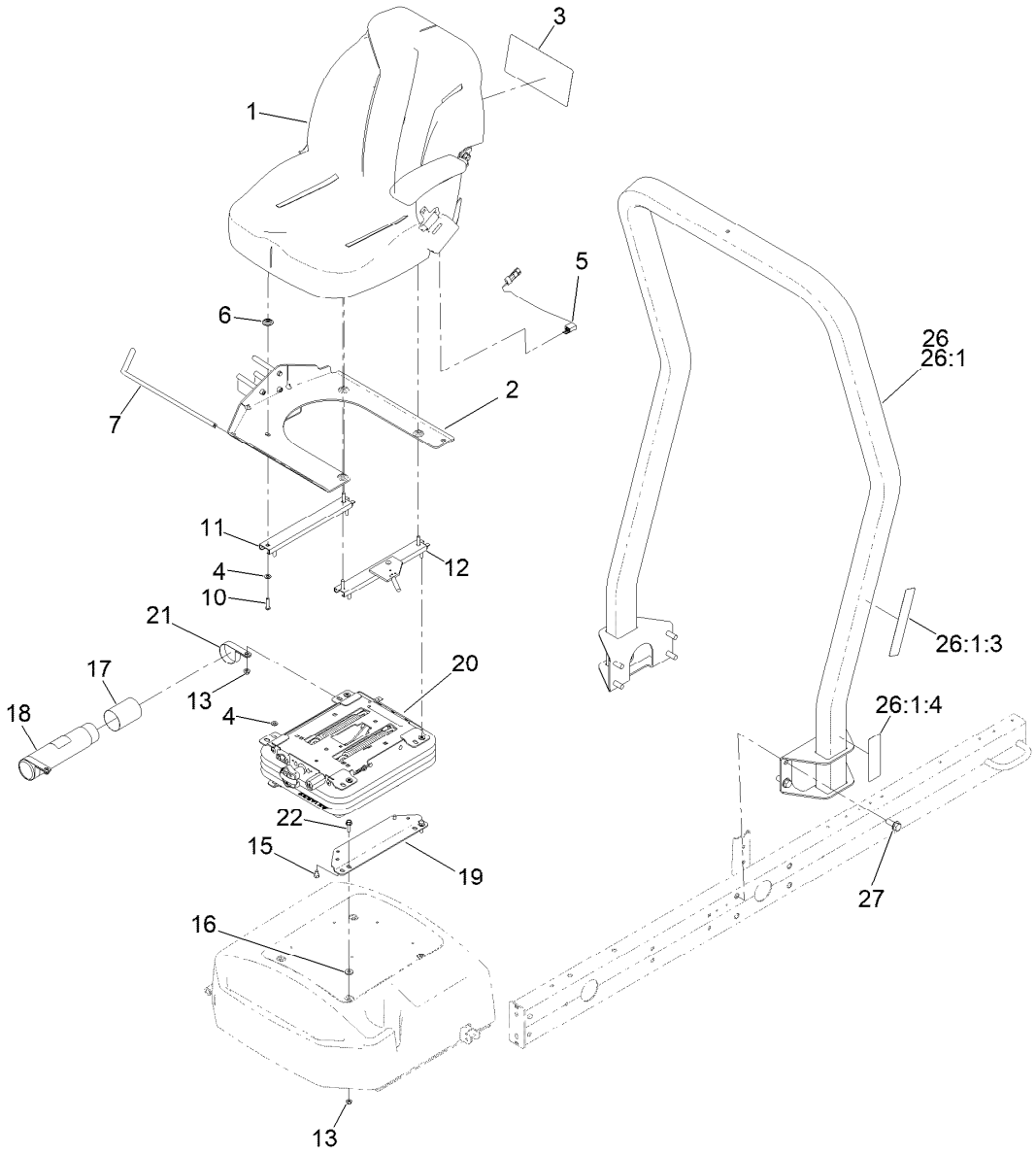


# Seat and Roll-Over Protection System Assembly

| Ref. | Part Number | Qty. | Description |
|---|---|---|---|
| 1 | 139-2700 | 1 | Seat ASM |
| 2 | 138-6985-03 | 1 | Mount-Seat |
| 3 | 145-2572 | 1 | Decal-Service |
| 4 | 3256-23 | 8 | Washer-Plain |
| 5 | 108-8657 | 1 | Harness-Wire, Seat |
| 6 | 136-9002 | 4 | Spacer-Mounting |
| 7 | 130-7100 | 1 | Trim-Seatbase |
| 10 | 3290-511 | 4 | Screw-HSBH |
| 11 | 92-8990 | 1 | Adjuster-Seat, Non-Locking |
| 12 | 92-8991 | 1 | Adjuster (W/Latch) |
| 13 | 104-8300 | 8 | Nut-HF, NI |
| 15 | 48-7680 | 4 | Screw-HH |

| Ref. | Part Number | Qty. | Description |
|---|---|---|---|
| 16 | 71-9310 | 4 | Spacer |
| 17 | 104-7048 | 1 | Cap-Housing |
| 18 | 104-7050 | 1 | Tube-Manual |
| 19 | 108-6590-0P | 2 | Bracket-Seat, Lower |
| 20 | 145-5295 | 1 | Suspension ASM |
| 21 | 2412-133 | 2 | Clamp-R |
| 22 | 3234-17 | 4 | Screw-HHF |
| 26 | 136-7954 | 1 | ROPS ASM |
| 26:1 | | 1 | ROPS ASM ● |
| 26:1:3 | 136-3702 | 1 | Decal-Safety, ROPS |
| 26:1:4 | 136-2159 | 1 | Decal-Seat Service |
| 27 | 3234-38 | 8 | Screw-HHF |

● Not serviced separately

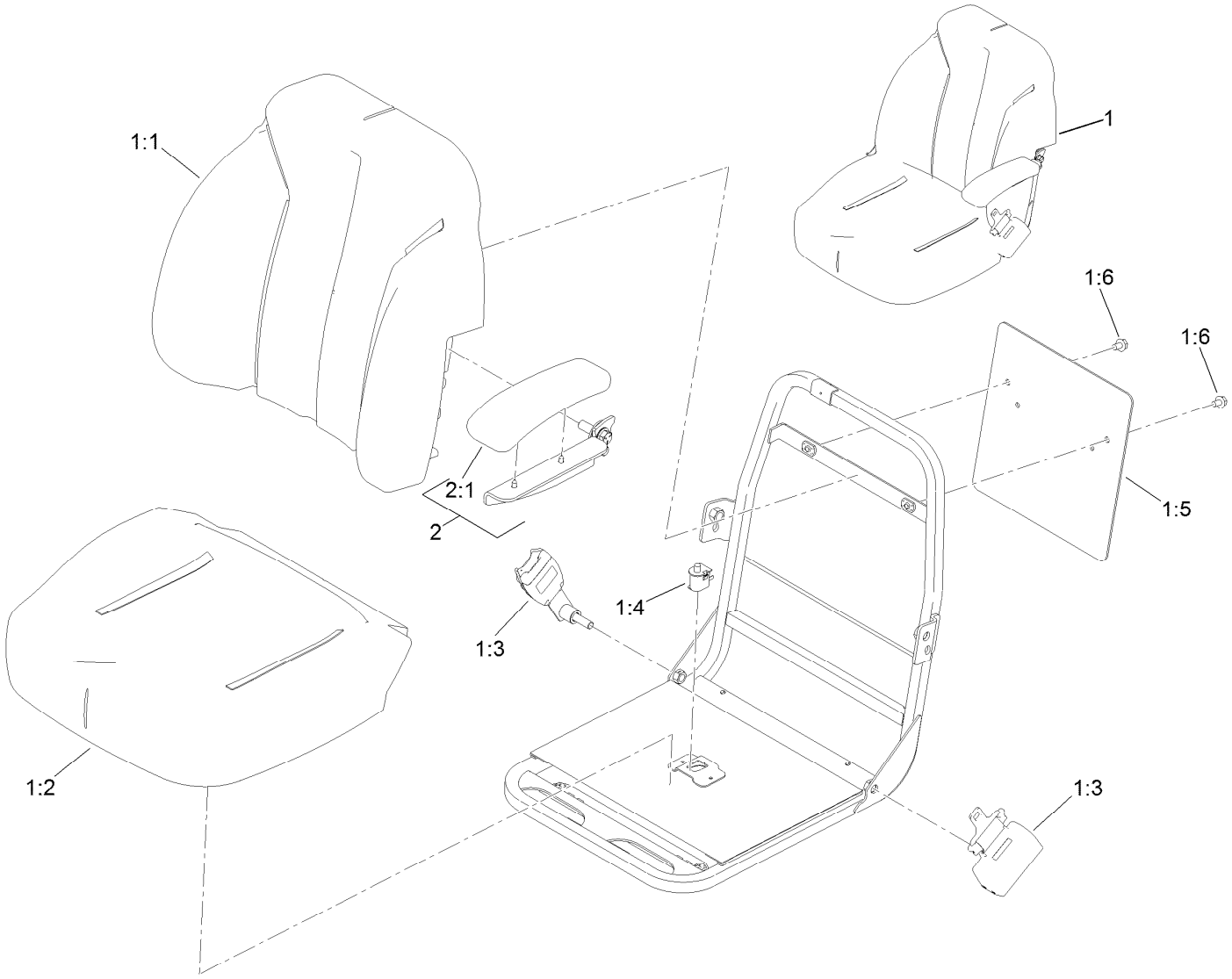


# Seat Assembly No. 139-2700

| *Ref.* | *Part Number* | *Qty.* | *Description* |
|---|---|---|---|
| 1 | 139-2680 | 1 | Seat ASM |
| 1:1 | 145-0083 | 1 | Cover-Seat, Back |
| 1:2 | 145-0084 | 1 | Cover-Seat, Bottom |
| 1:3 | 139-2707 | 1 | Seat Belt Kit |
| 1:4 | 82-2190 | 1 | Switch-Bail |
| 1:5 | 139-2701 | 1 | Plate-Decal |
| 1:6 | 3234-30 | 2 | Screw-HHF |
| 2 | 121-3660 | 1 | LH Arm Rest Kit |
| 2:1 | 110-4163 | 1 | Cushion-Rest, Arm |

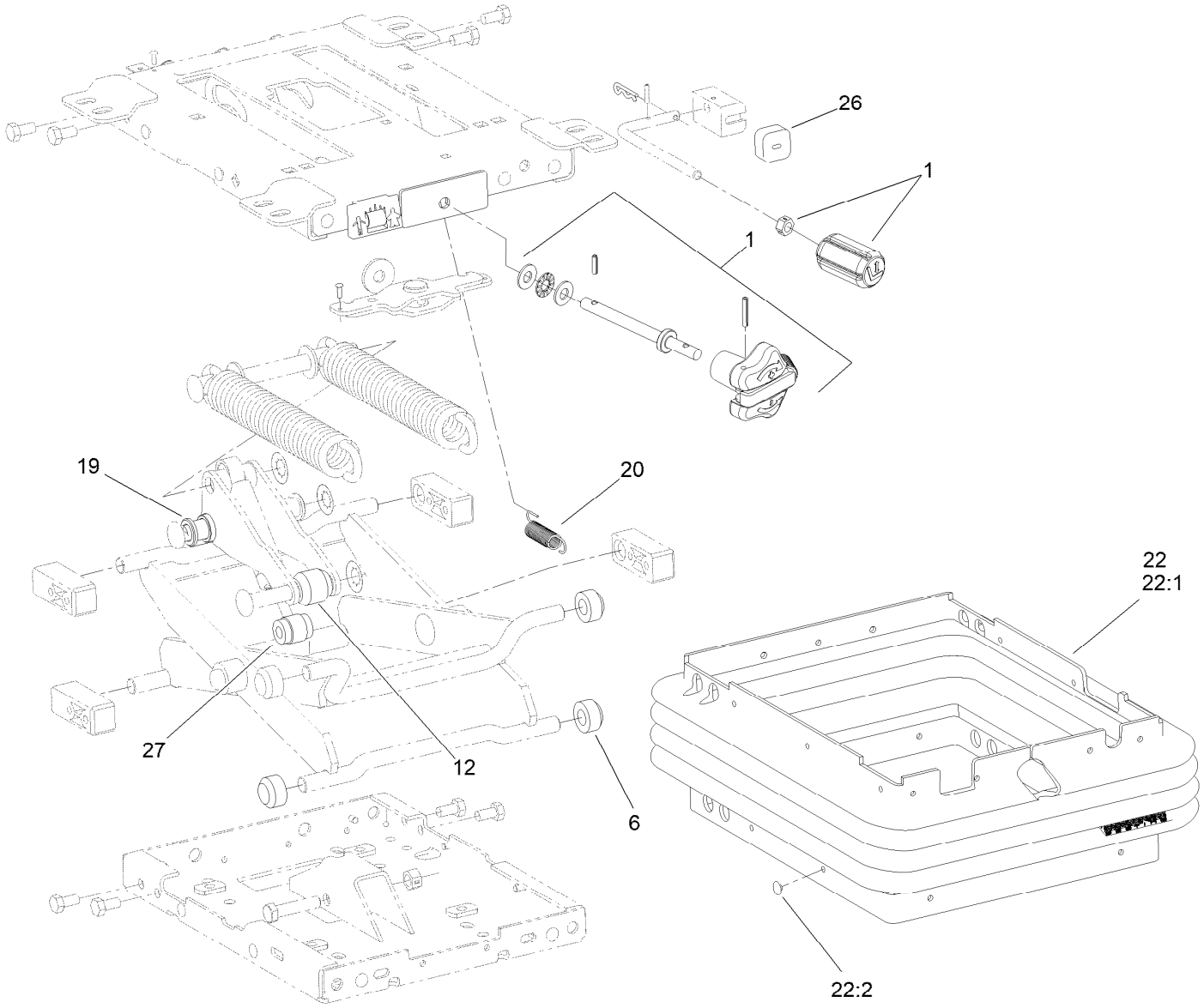


# Mechanical Seat Suspension Assembly No. 145-5295

| *Ref.* | *Part Number* | *Qty.* | *Description* |
|---|---|---|---|
| 1 | 145-5296 | 1 | Knob Service Kit |
| 6 | 108-9632 | 4 | Roller |
| 12 | 145-5297 | 1 | Roller-Plastic, 36MM |
| 19 | 108-9622 | 2 | Tube |
| 20 | 108-9633 | 1 | Spring-Extension |
| 22 | 112-0164 | 1 | Boot Kit |
| 22:1 | | 1 | Boot-Suspension ● |
| 22:2 | 108-9641 | 21 | Clip-Plug |
| 26 | 108-9634 | 1 | Bumper |
| 27 | 108-9614 | 1 | Damper |

● Not serviced separately

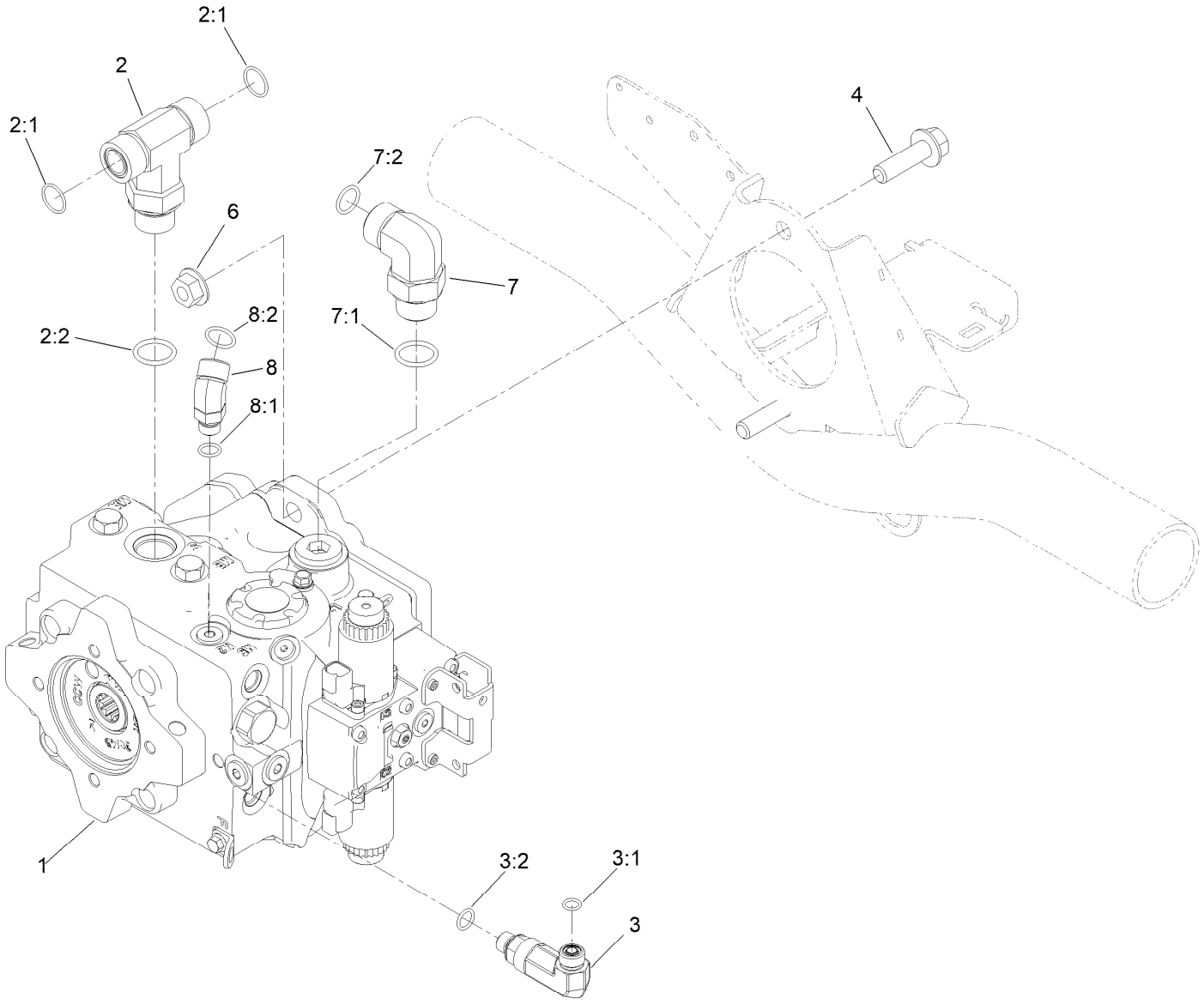


# Traction Pump Mounting Assembly

| *Ref.* | *Part Number* | *Qty.* | *Description* |
|---|---|---|---|
| 1 | 144-2060 | 1 | Pump-Hydraulic |
| 2 | 104-4836 | 1 | Fitting-Tee |
| 2:1 | 237-58 | 2 | O-Ring |
| 2:2 | 237-81 | 1 | O-Ring |
| 3 | 340-5 | 1 | Fitting-Straight |
| 3:1 | 237-42 | 1 | O-Ring |
| 3:2 | 237-30 | 1 | O-Ring |
| 4 | 130-6481 | 2 | Screw-HHF |
| 6 | 32128-49 | 2 | Nut-HHF |
| 7 | 340-139 | 1 | Fitting-Elbow 90 |
| 7:1 | 237-81 | 1 | O-Ring |
| 7:2 | 237-65 | 1 | O-Ring |
| 8 | 340-96 | 1 | Adapter |
| 8:1 | 237-30 | 1 | O-Ring |
| 8:2 | 237-42 | 1 | O-Ring |

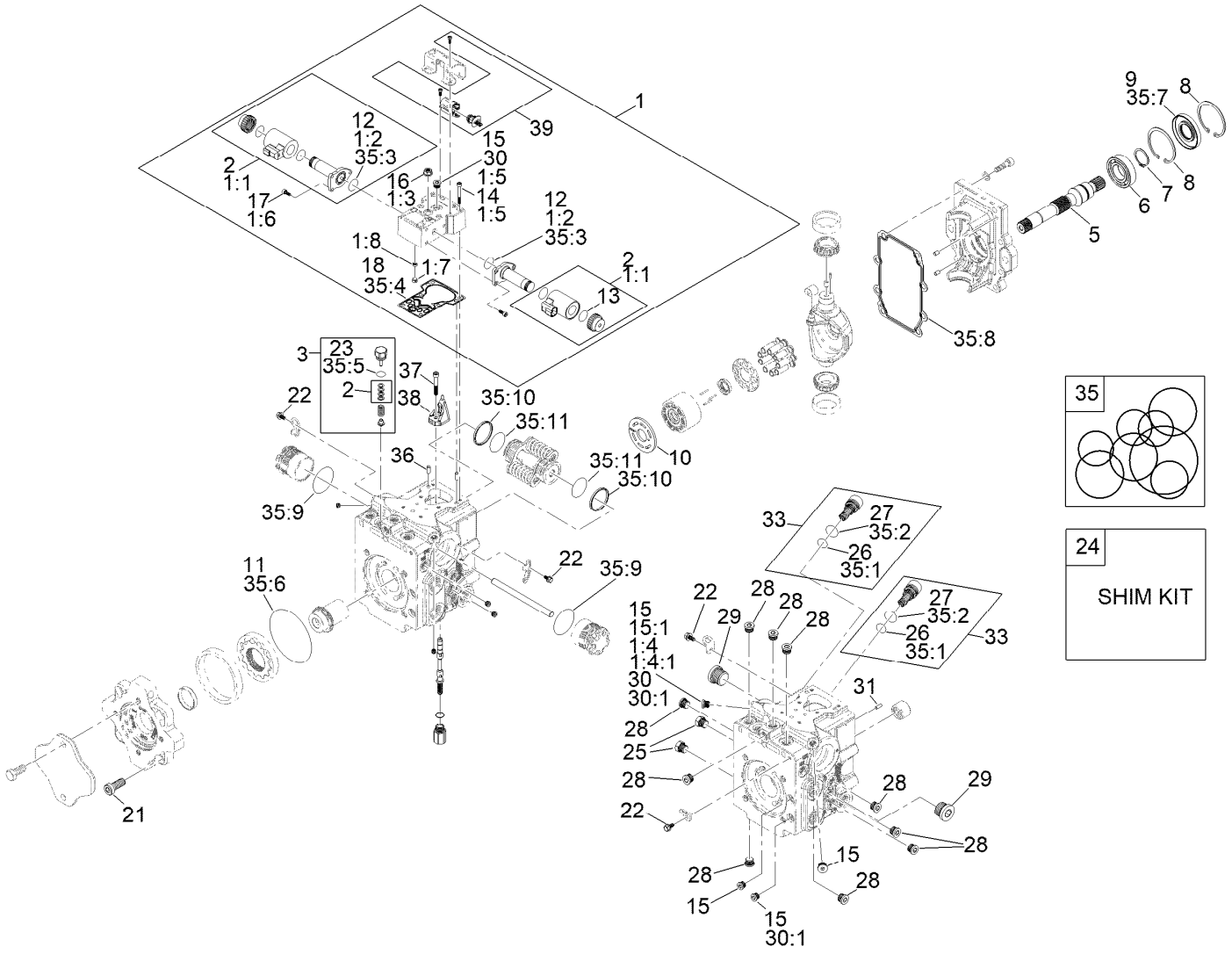


# Hydraulic Pump Assembly No. 144-2060

| Ref. | Part Number | Qty. | Description |
|---|---|---|---|
| 1 | 136-3209 | 1 | Control Kit (12 Volt) |
| 1:1 | 132-6204 | 2 | Coil Kit |
| 1:2 | 125-5288 | 2 | O-Ring |
| 1:3 | 125-5273 | 1 | Nut-Seal |
| 1:4 | 75-0170 | 1 | Plug-Thread, Straight |
| 1:4:1 | 92-8777 | 1 | O-Ring |
| 1:5 | 125-5274 | 6 | Screw |
| 1:6 | 125-5272 | 6 | Screw |
| 1:7 | 136-3213 | 1 | Gasket-Control |
| 1:8 | 136-3218 | 1 | Sensor Kit |
| 2 | 125-5294 | 2 | Coil Kit |
| 3 | 161-7203 | 1 | Charge Relief Valve |
| 5 | 139-4811 | 1 | Shaft-13Tooth |
| 6 | 139-4820 | 1 | Bearing-Ball |
| 7 | 139-4806 | 1 | Ring-Retaining |
| 8 | 139-4831 | 2 | Ring-Retaining |
| 9 | 161-7202 | 1 | Oil Seal-Black |
| 10 | 139-4813 | 1 | Plate-Valve |

| Ref. | Part Number | Qty. | Description |
|---|---|---|---|
| 11 | 161-7206 | 1 | O-Ring As568-244 Nbr90 |
| 12 | 125-5288 | 2 | O-Ring |
| 13 | 131-7388 | 2 | O-Ring |
| 14 | 125-5274 | 6 | Screw |
| 15 | 75-0170 | 4 | Plug-Thread, Straight |
| 15:1 | 92-8777 | 1 | O-Ring |
| 16 | 161-7200 | 1 | Nut-Hex Seal |
| 17 | 125-5272 | 6 | Screw |
| 18 | 125-5283 | 1 | Gasket-Control |
| 21 | 125-5282 | 4 | Screw |
| 22 | 125-5270 | 4 | Screw |
| 23 | 125-5298 | 1 | O-Ring |
| 24 | 92-1353 | 1 | Shim Kit |
| 25 | 136-1026 | 1 | Plug ASM |
| 26 | 75-0240 | 2 | O-Ring |
| 27 | 84-0560 | 2 | O-Ring |
| 28 | 69-3080 | 10 | Plug |
| 29 | 69-3130 | 1 | Plug |

● Not illustrated

■ Not serviced separately

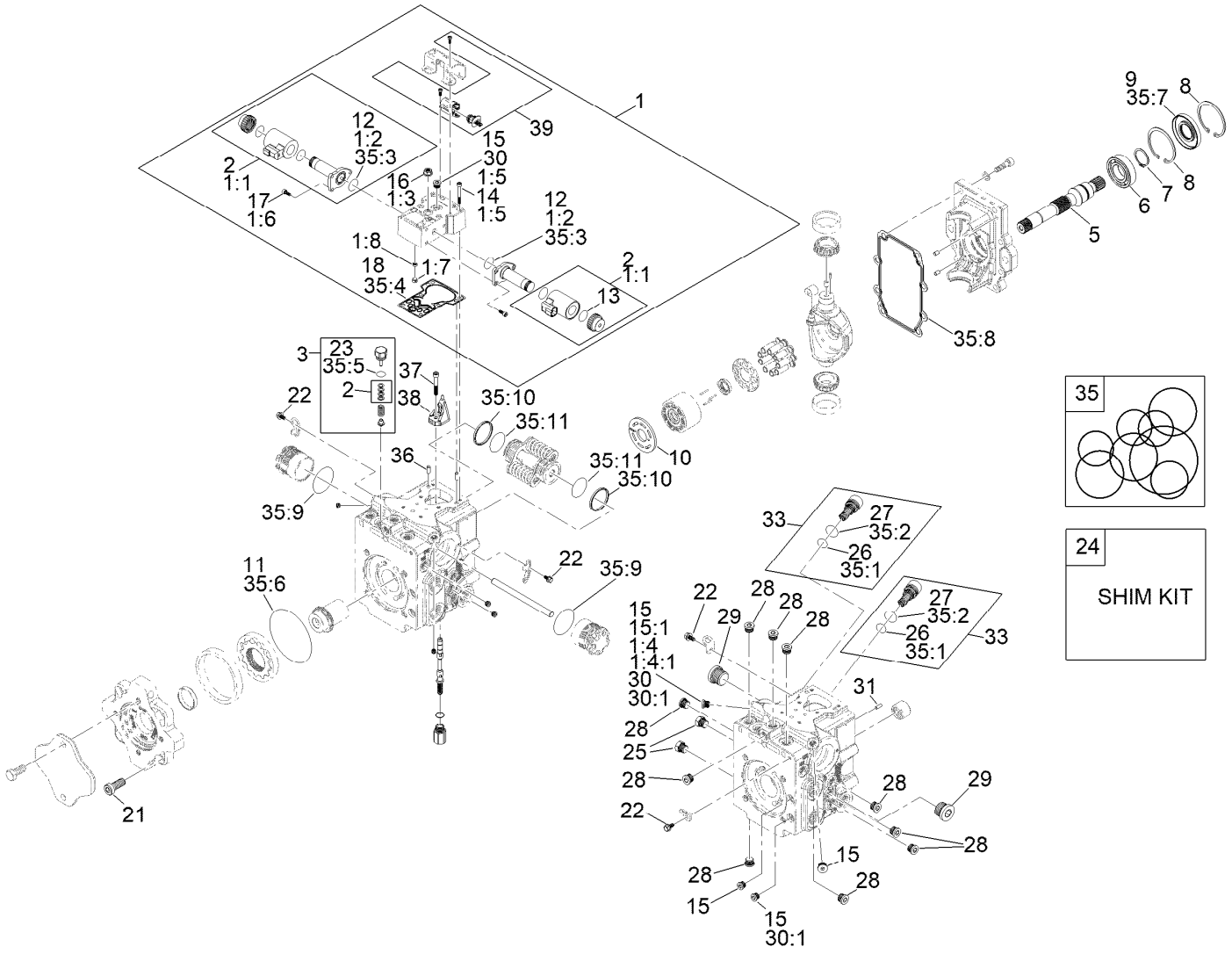


# Hydraulic Pump Assembly No. 144-2060 (continued)

| Ref. | Part Number | Qty. | Description |
|---|---|---|---|
| 30 | 75-0170 | 4 | Plug-Thread, Straight |
| 30:1 | 92-8777 | 1 | O-Ring |
| 31 | 75-0510 | 1 | Pin |
| 33 | 161-7204 | 1 | Valve-Scr Assembly 260 Bar (3770 PSI) |
| 35 | 132-6205 | 1 | Overhaul Seal Kit |
| 35:1 | 75-0240 | 2 | O-Ring |
| 35:2 | 84-0560 | 2 | O-Ring |
| 35:3 | 125-5288 | 2 | O-Ring |
| 35:4 | 125-5283 | 1 | Gasket-Control |
| 35:5 | 125-5298 | 1 | O-Ring |
| 35:6 | 132-6206 | 1 | O-Ring |
| 35:7 | 127-6214 | 1 | Seal-Lip |
| 35:8 | | 1 | Gasket ■ |
| 35:9 | | 2 | O-Ring ■ |
| 35:10 | | 2 | Piston Ring ■ |
| 35:11 | | 2 | O-Ring ■ |
| 36 | 136-3215 | 2 | Pin |
| 37 | 136-3216 | 1 | Screw, M6 X 35 |
| 38 | 136-3217 | 1 | Link - Swashplate Feedback |
| 39 | 136-3218 | 1 | Sensor Kit ● |

● Not illustrated

■ Not serviced separately

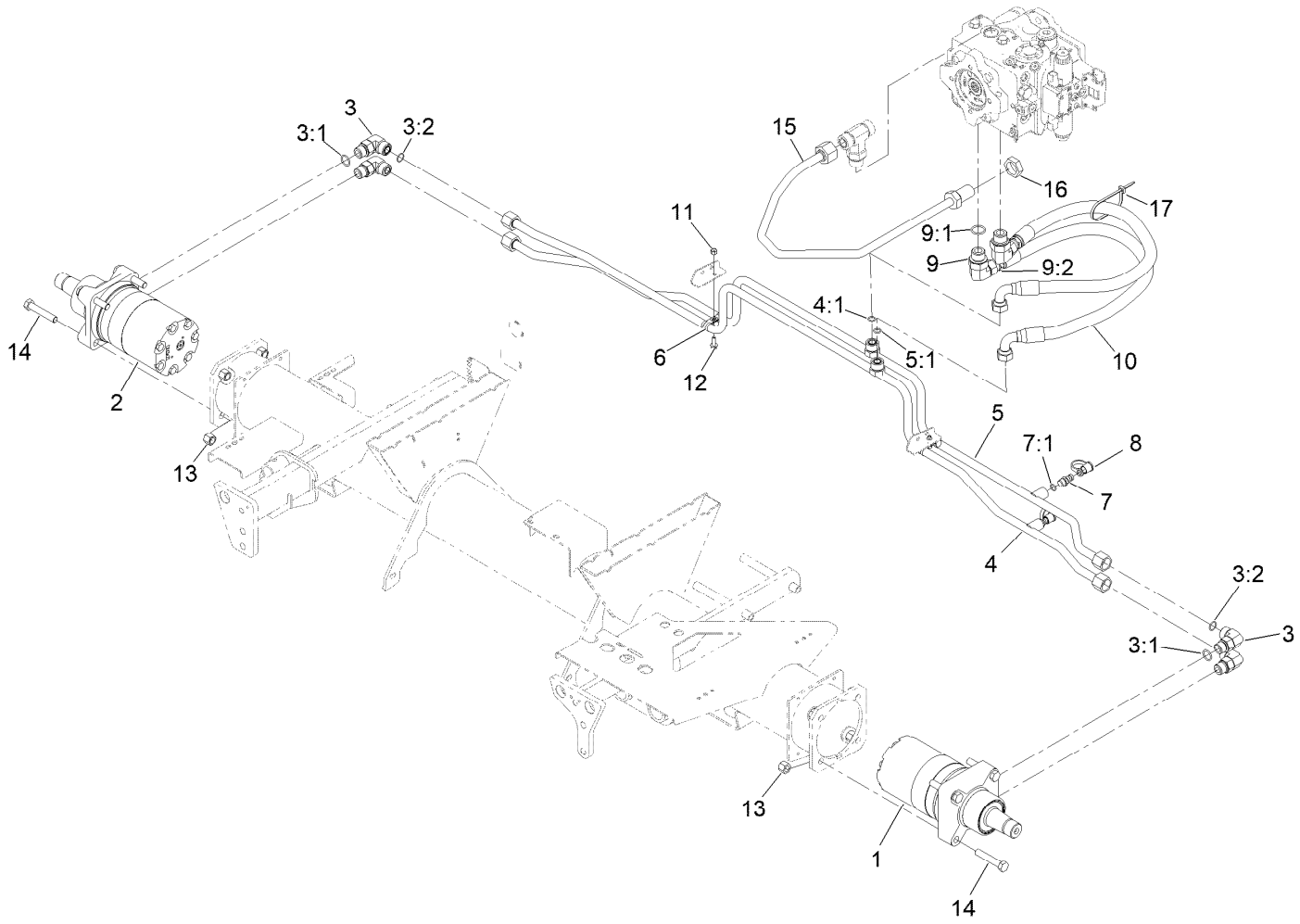


# Traction Hydraulic Assembly

| Ref. | Part Number | Qty. | Description |
|---|---|---|---|
| 1 | 139-6038 | 1 | Hydraulic Motor ASM |
| 2 | 139-6039 | 1 | Hydraulic Motor ASM |
| 3 | 340-17 | 4 | Fitting-Elbow, 90 DEG |
| 3:1 | 237-65 | 1 | O-Ring |
| 3:2 | 237-80 | 1 | O-Ring |
| 4 | 125-1493 | 1 | Tube ASM |
| 4:1 | 237-65 | 1 | O-Ring |
| 5 | 125-1494 | 1 | Tube ASM |
| 5:1 | 237-65 | 1 | O-Ring |
| 6 | 2412-134 | 4 | Clamp-R |
| 7 | 59-7410 | 2 | Fitting-Diagnostic |
| 7:1 | 237-42 | 1 | O-Ring |

| Ref. | Part Number | Qty. | Description |
|---|---|---|---|
| 8 | 354-79 | 2 | Cap-Dust |
| 9 | 340-139 | 2 | Fitting-Elbow 90 |
| 9:1 | 237-81 | 1 | O-Ring |
| 9:2 | 237-65 | 1 | O-Ring |
| 10 | 127-2300 | 2 | Hose ASM |
| 11 | 3296-42 | 2 | Nut-Lock, NI |
| 12 | 3234-4 | 2 | Screw-HHF |
| 13 | 3296-23 | 8 | Nut-Lock, NI |
| 14 | 325-11 | 8 | Screw-HH |
| 15 | 145-2551 | 1 | Hydraulic Tube ASM |
| 16 | 340-74 | 1 | Nut-Lock, Bulkhead |
| 17 | 3334-945 | 1 | Tie-Cable |

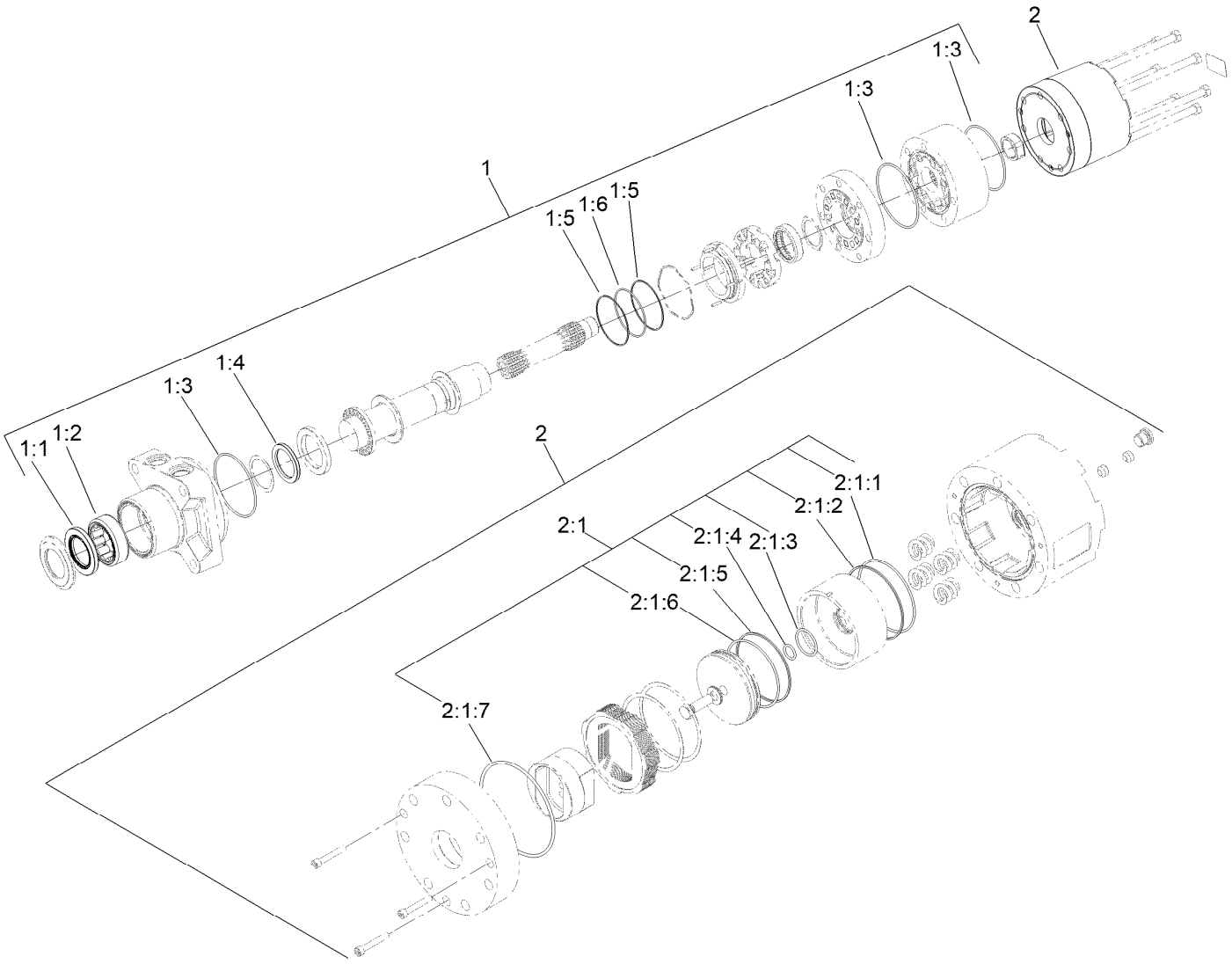


# Hydraulic Motor Assembly No. 139-6038

| Ref. | Part Number | Qty. | Description |
|---|---|---|---|
| 1 | 161-7208 | 1 | Seal Kit |
| 1:1 | 161-7209 | 1 | Seal, Grease |
| 1:2 | 161-7210 | 1 | Shell, Bearing |
| 1:3 | 161-7211 | 3 | O-Ring |
| 1:4 | 161-7212 | 1 | Shaft Seal (HP) |
| 1:5 | 161-7213 | 2 | Back-Up Ring |
| 1:6 | 161-7214 | 1 | O-Ring |
| 2 | 145-2597 | 1 | Brake Housing ASM |
| 2:1 | 161-8366 | 1 | Seal Kit-Brake ASM |

| Ref. | Part Number | Qty. | Description |
|---|---|---|---|
| 2:1:1 | 161-8367 | 1 | O-Ring |
| 2:1:2 | 161-8368 | 1 | Backup Ring |
| 2:1:3 | 161-8369 | 1 | O-Ring |
| 2:1:4 | 161-8370 | 1 | O-Ring |
| 2:1:5 | 161-8371 | 1 | Backup Ring |
| 2:1:6 | 161-8372 | 1 | O-Ring |
| 2:1:7 | 161-7211 | 1 | O-Ring |
| 2:1:8 | 161-8373 | 1 | O-Ring ● |

● Not illustrated

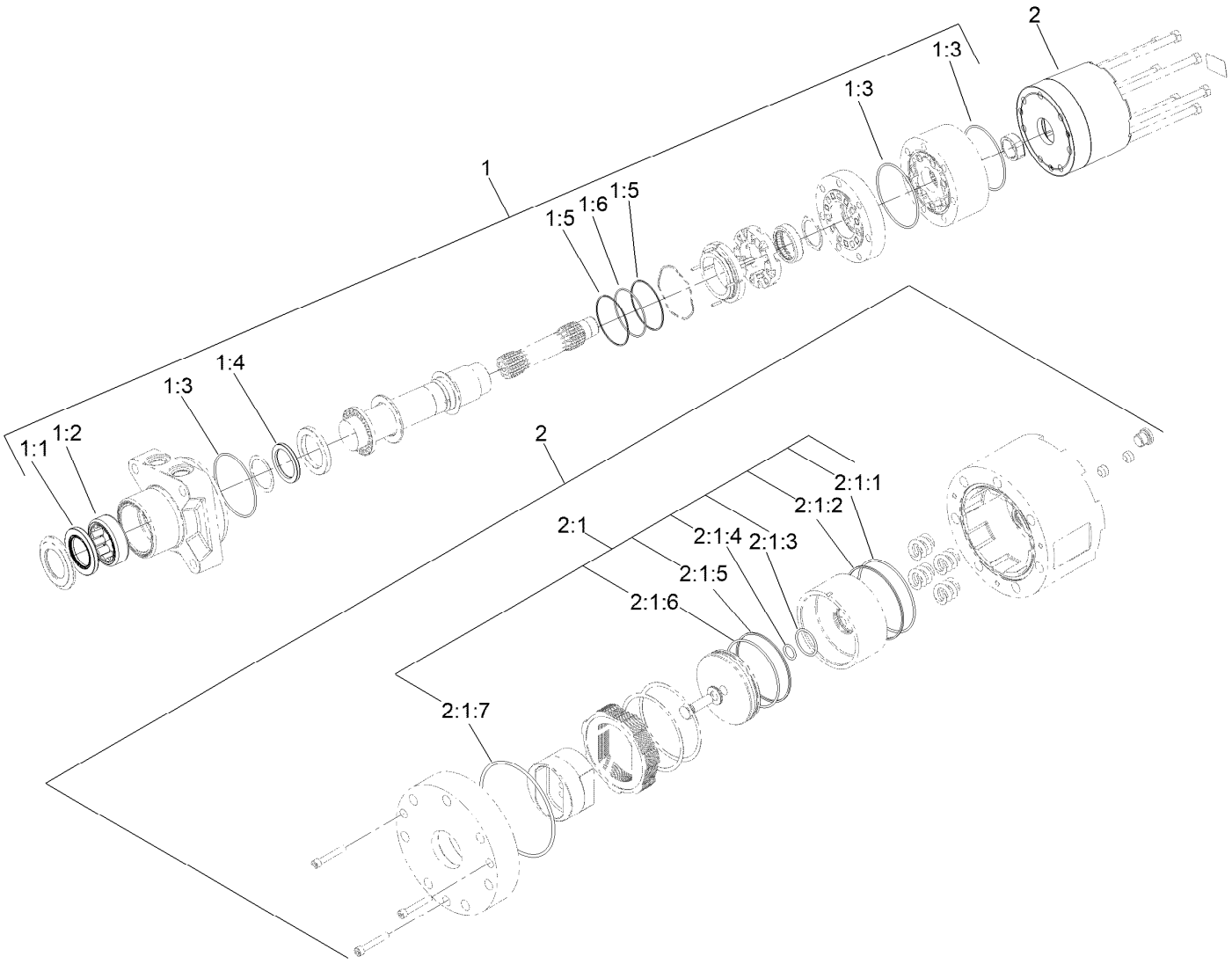


# Hydraulic Motor Assembly No. 139-6039

| Ref. | Part Number | Qty. | Description |
|---|---|---|---|
| 1 | 161-7208 | 1 | Seal Kit |
| 1:1 | 161-7209 | 1 | Seal, Grease |
| 1:2 | 161-7210 | 1 | Shell, Bearing |
| 1:3 | 161-7211 | 3 | O-Ring |
| 1:4 | 161-7212 | 1 | Shaft Seal (HP) |
| 1:5 | 161-7213 | 2 | Back-Up Ring |
| 1:6 | 161-7214 | 1 | O-Ring |
| 2 | 145-2597 | 1 | Brake Housing ASM |
| 2:1 | 161-8366 | 1 | Seal Kit-Brake ASM |

| Ref. | Part Number | Qty. | Description |
|---|---|---|---|
| 2:1:1 | 161-8367 | 1 | O-Ring |
| 2:1:2 | 161-8368 | 1 | Backup Ring |
| 2:1:3 | 161-8369 | 1 | O-Ring |
| 2:1:4 | 161-8370 | 1 | O-Ring |
| 2:1:5 | 161-8371 | 1 | Backup Ring |
| 2:1:6 | 161-8372 | 1 | O-Ring |
| 2:1:7 | 161-7211 | 1 | O-Ring |
| 2:1:8 | 161-8373 | 1 | O-Ring ● |

● Not illustrated

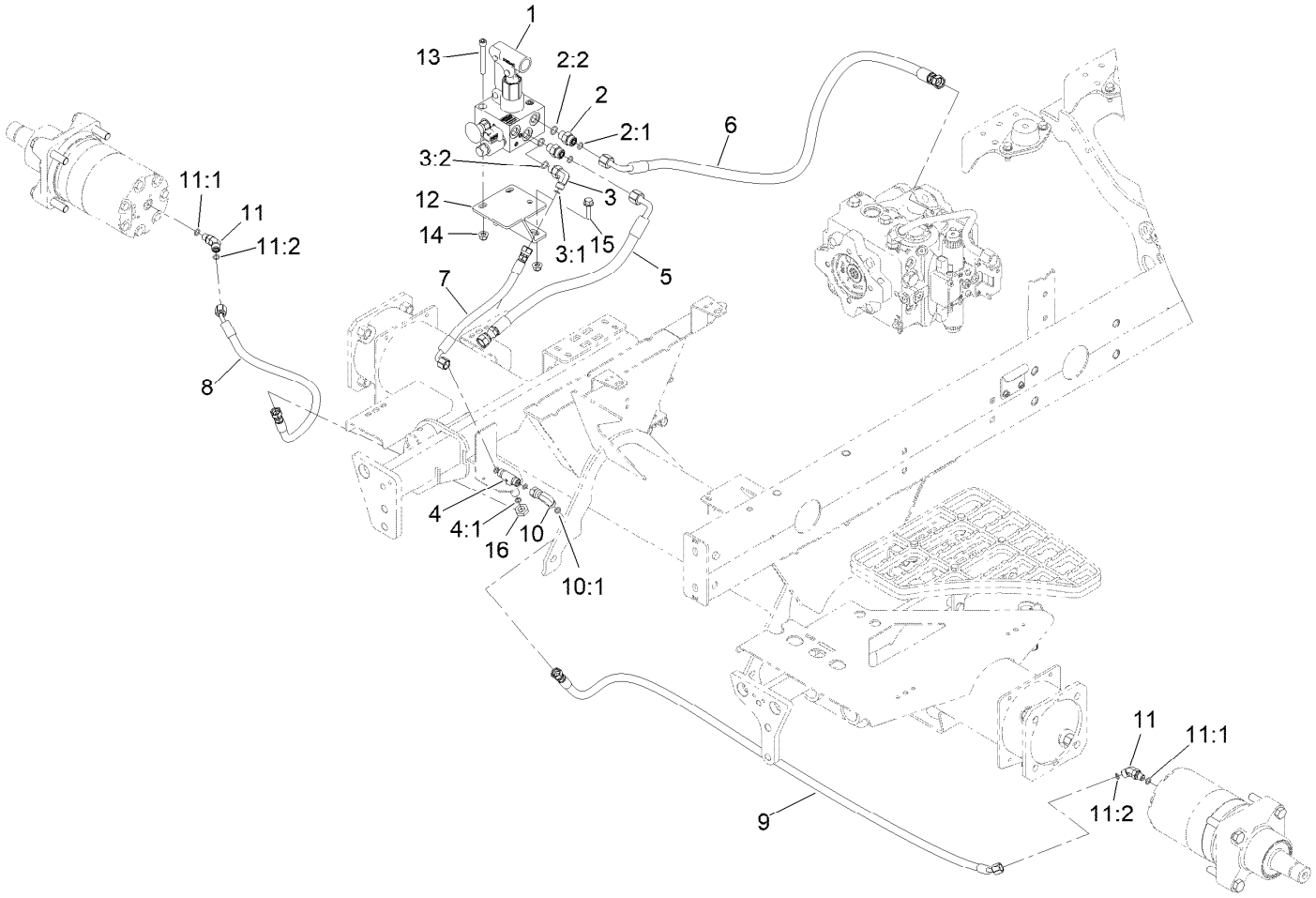


# Hydraulic Brake Assembly

| Ref. | Part Number | Qty. | Description |
|---|---|---|---|
| 1 | 139-6046 | 1 | Manifold-Brake Release |
| 2 | 340-2 | 2 | Fitting-Straight |
| 2:1 | 237-22 | 1 | O-Ring |
| 2:2 | 237-42 | 1 | O-Ring |
| 3 | 340-82 | 1 | Fitting-Elbow, 90 DEG |
| 3:1 | 237-42 | 1 | O-Ring |
| 3:2 | 237-21 | 1 | O-Ring |
| 4 | 140-7452 | 1 | Fitting-Tee, Bulkhead |
| 4:1 | 237-21 | 3 | O-Ring |
| 5 | 139-1151 | 1 | HYD Hose ASM |
| 6 | 144-2078 | 1 | Hose ASM-Hydraulic |
| 7 | 121-4455 | 1 | Hose-HYD |
| 8 | 145-2599 | 1 | Hose ASM-HYD HP |

| Ref. | Part Number | Qty. | Description |
|---|---|---|---|
| 9 | 115-2029 | 1 | HYD Hose ASM |
| 10 | 92-2745 | 1 | Elbow-90 |
| 10:1 | 237-21 | 1 | O-Ring |
| 11 | 340-103 | 2 | Fitting-HYD, 45 DEG |
| 11:1 | 237-78 | 1 | O-Ring |
| 11:2 | 237-21 | 1 | O-Ring |
| 12 | 145-2459-03 | 1 | Mount - Brake Release [black] |
| 13 | 3274-40 | 3 | Screw-HSH |
| 14 | 104-8300 | 5 | Nut-HF, NI |
| 15 | 3234-29 | 2 | Screw-HHF |
| 16 | 340-78 | 1 | Nut-Lock |

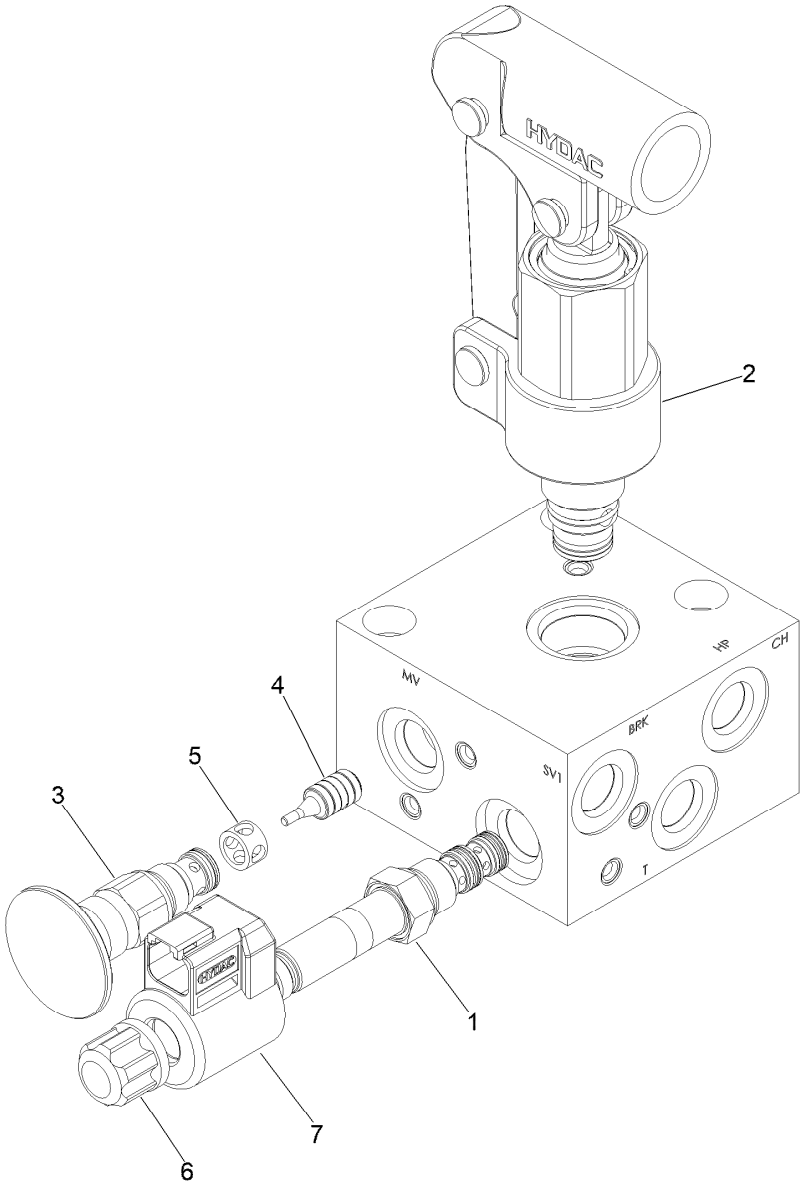


# Brake Release Manifold Assembly No. 139-6046

| *Ref.* | *Part Number* | *Qty.* | *Description* |
|---|---|---|---|
| 1 | 145-2563 | 1 | Directional Valve, 3W/2P |
| 2 | 145-2564 | 1 | Hand Pump |
| 3 | 145-2565 | 1 | Manual Valve, N.O. |
| 4 | 145-2566 | 1 | Pilot Piston Assy, Rvs06 |
| 5 | 145-2567 | 1 | Spacer |
| 6 | 145-2569 | 1 | Coil Nut, Tall (06 Valves) |
| S1 | 145-2568 | 1 | *obs* Coil 12Dn01-32-1329 |

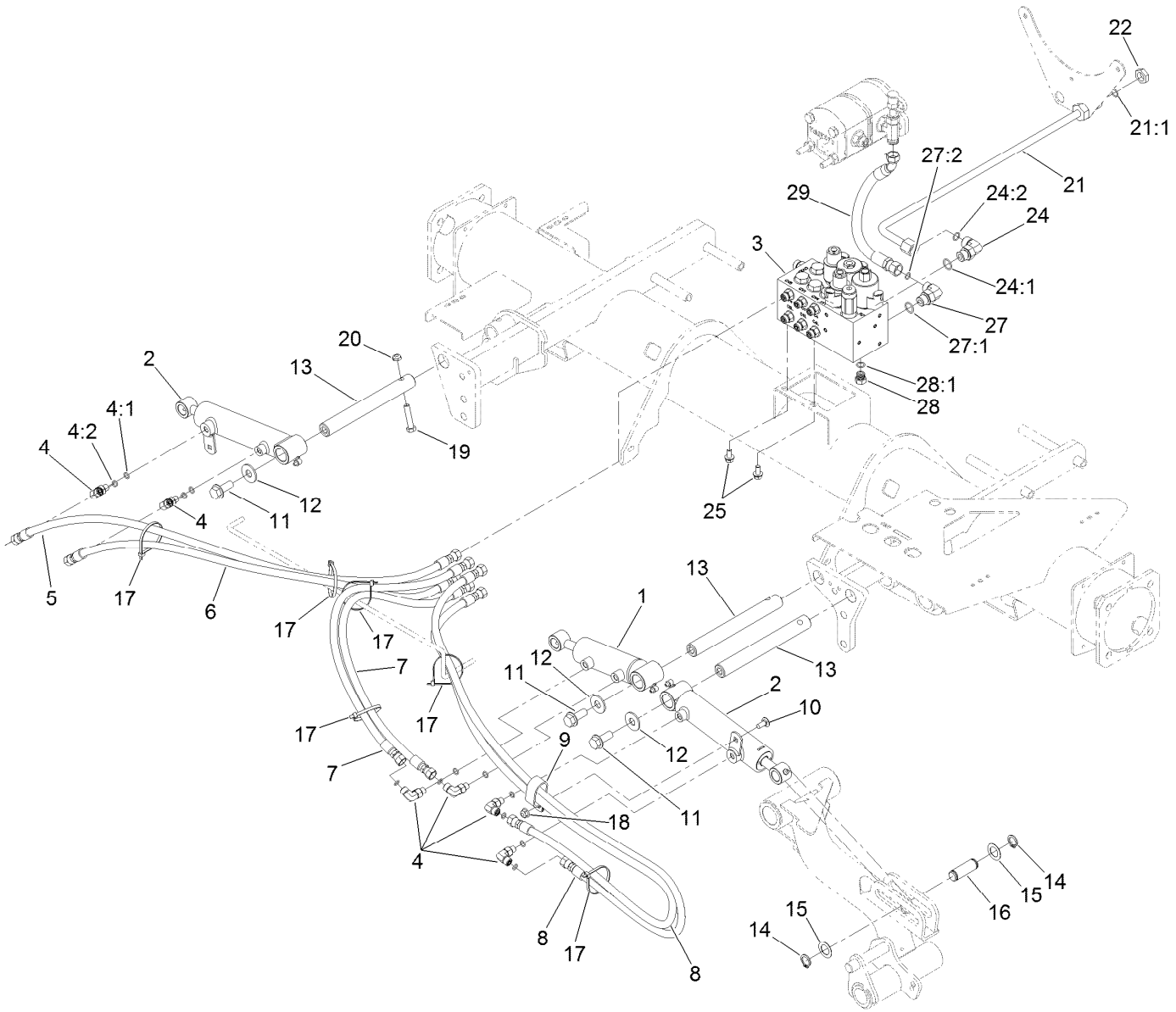


# Front Lift Hydraulic Assembly

| Ref. | Part Number | Qty. | Description |
|---|---|---|---|
| 1 | 138-6999 | 1 | HYD Cylinder ASM |
| 2 | 163-3534 | 2 | Cylinder-Hydraulic |
| 3 | 105-7577 | 1 | HYD Lift Block Manifold ASM |
| 4 | 340-132 | 6 | Fitting-Elbow, 90 DEG |
| 4:1 | 237-78 | 1 | O-Ring |
| 4:2 | 237-21 | 1 | O-Ring |
| 5 | 127-2498 | 1 | Hose ASM |
| 6 | 127-2499 | 1 | Hose ASM |
| 7 | 127-2497 | 2 | Hose ASM |
| 8 | 127-2496 | 2 | Hose ASM |
| 9 | 2412-137 | 1 | Clamp-R, Double |
| 10 | 3230-23 | 1 | Bolt-CARR |
| 11 | 3234-38 | 3 | Screw-HHF |
| 12 | 3256-6 | 3 | Washer-Flat |
| 13 | 117-0148 | 3 | Pin-Cylinder |
| 14 | 32120-93 | 6 | Ring-Retaining |
| 15 | 3-6498 | 6 | Washer-Thrust |

| Ref. | Part Number | Qty. | Description |
|---|---|---|---|
| 16 | 104-0046 | 3 | Pin-Slide, Cylinder |
| 17 | 3290-379 | 6 | Tie-Cable |
| 18 | 104-8300 | 1 | Nut-HF, NI |
| 19 | 323-9 | 3 | Screw-HH |
| 20 | 3296-59 | 3 | Nut-Lock, NI |
| 21 | 127-2477 | 1 | Tube ASM |
| 21:1 | 237-30 | 1 | O-Ring |
| 22 | 340-127 | 1 | Nut-Bulkhead |
| 24 | 340-98 | 1 | Fitting-Elbow, 90 DEG |
| 24:1 | 237-79 | 1 | O-Ring |
| 24:2 | 237-30 | 1 | O-Ring |
| 25 | 3234-14 | 2 | Screw-HHF |
| 27 | 340-18 | 1 | Fitting-HYD, 90 DEG |
| 27:1 | 237-79 | 1 | O-Ring |
| 27:2 | 237-22 | 1 | O-Ring |
| 28 | 353-508 | 1 | Plug-HH |
| 28:1 | 237-42 | 1 | O-Ring |
| 29 | 127-2535 | 1 | Hose-ASM |

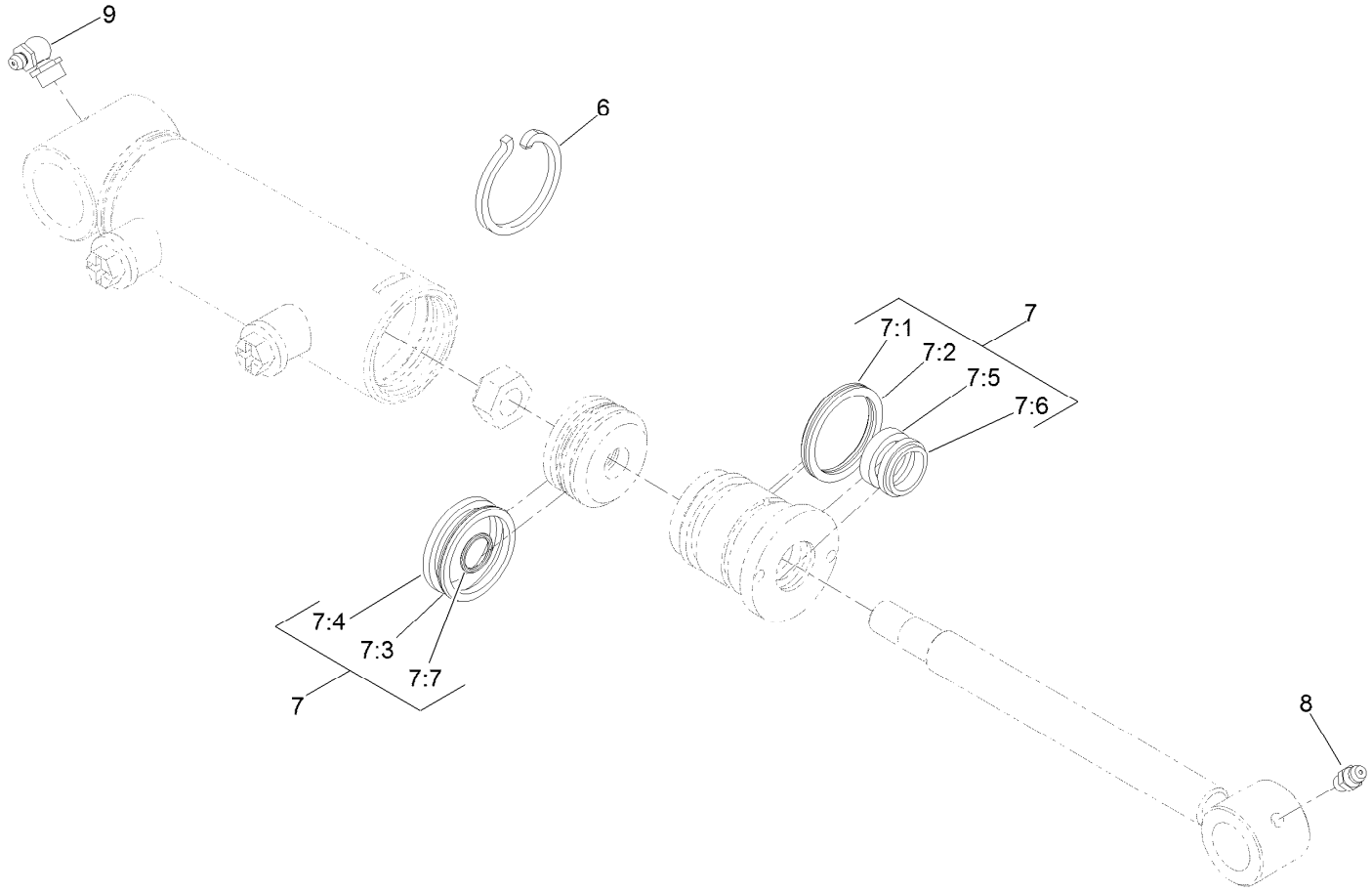


# Hydraulic Cylinder Assembly No. 138-6999

| *Ref.* | *Part Number* | *Qty.* | *Description* |
|---|---|---|---|
| 6 | 84-1680 | 1 | Ring-Retaining |
| 7 | 133-2900 | 1 | Seal Kit |
| 7:1 | | 1 | O-Ring ● |
| 7:2 | | 1 | Backup ● |
| 7:3 | | 1 | Bp Seal ● |
| 7:4 | | 1 | Wear Ring-Ht ● |
| 7:5 | | 1 | Bt Seal ● |
| 7:6 | | 1 | Dust Seal-Dt ● |
| 7:7 | | 1 | O-Ring ● |
| 8 | 302-5 | 1 | Fitting-Grease |
| 9 | 302-33 | 1 | Fitting-Grease |

● Not serviced separately

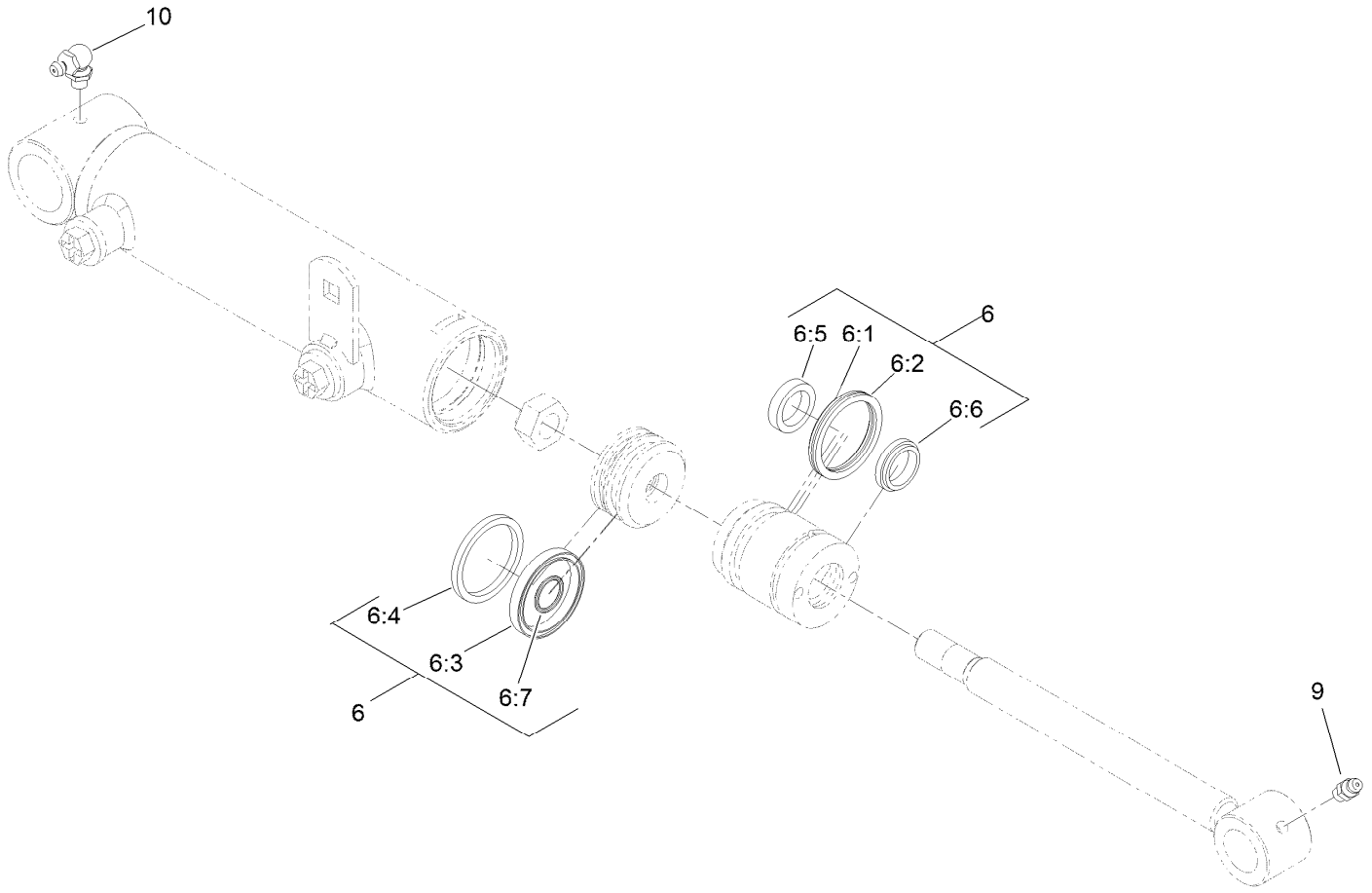


# Hydraulic Cylinder Assembly No. 163-3534

| *Ref.* | *Part Number* | *Qty.* | *Description* |
|---|---|---|---|
| 6 | 163-3529 | 1 | Seal Kit |
| 6:1 | | 1 | O-Ring ● |
| 6:2 | | 1 | Backup ● |
| 6:3 | | 1 | Pps Seal ● |
| 6:4 | | 1 | Wear Ring-Ht ● |
| 6:5 | | 1 | Bt Seal ● |
| 6:6 | | 1 | Dust Seal-Dt ● |
| 6:7 | | 1 | O-Ring ● |
| 9 | 302-5 | 1 | Fitting-Grease |
| 10 | 302-60 | 1 | Fitting-Grease |

● Not serviced separately

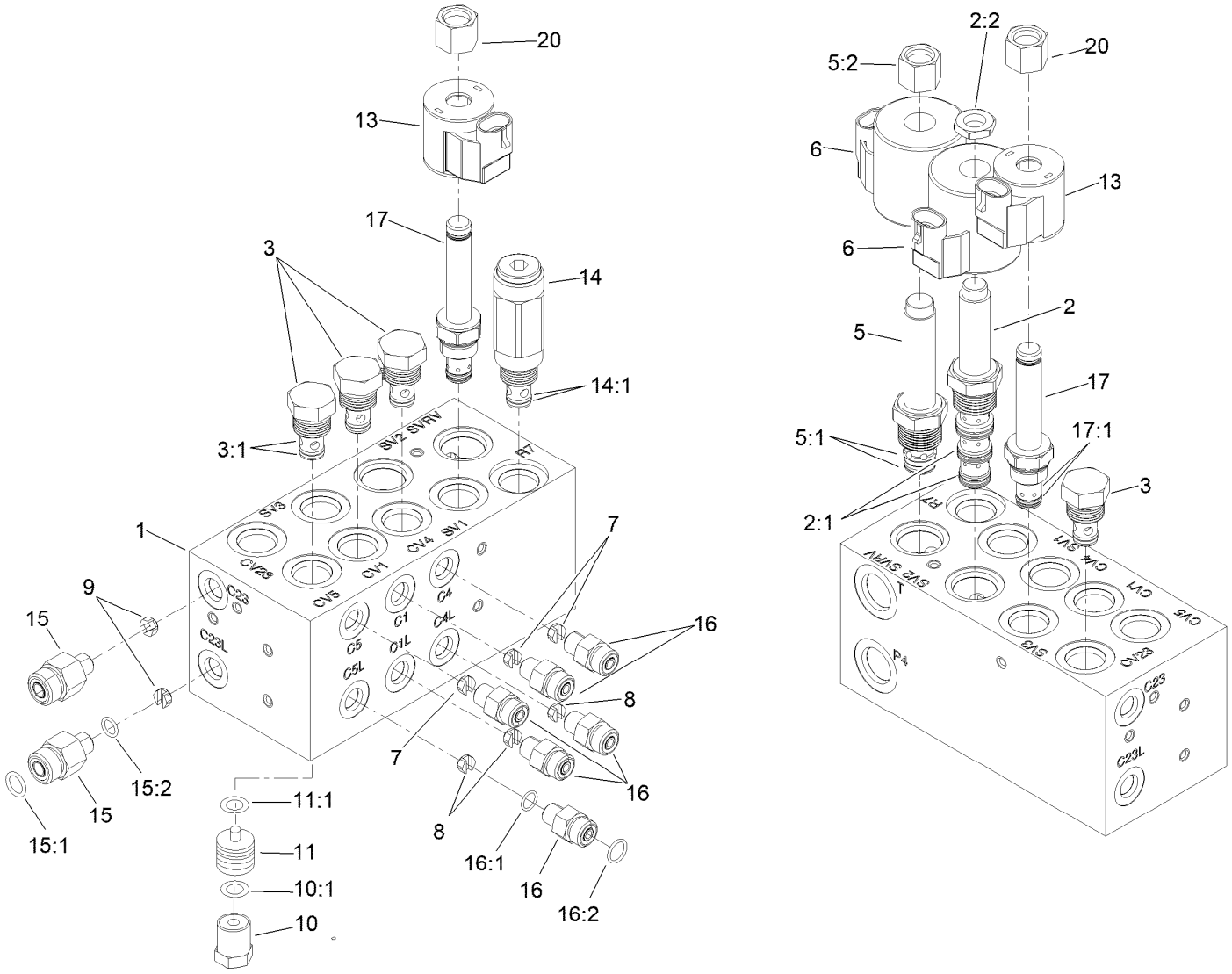


# Hydraulic Manifold Block Assembly No. 105-7577

| Ref. | Part Number | Qty. | Description |
|---|---|---|---|
| 1 | | 1 | Block-Manifold ● |
| 2 | 110-8906 | 1 | Valve-Solenoid |
| 2:1 | 110-8908 | 1 | Spool Valve Seal Kit |
| 2:2 | 110-2634 | 1 | Nut-Coil |
| 3 | 110-9006 | 4 | Valve-Check |
| 3:1 | 105-9156 | 1 | Seal Kit |
| 5 | 110-8905 | 1 | Valve-Relief, Solenoid |
| 5:1 | 110-6316 | 1 | Seal Kit |
| 5:2 | 130-8180 | 1 | Nut-Coil (9/16-24 Unef-2B) |
| 6 | 110-6344 | 2 | Coil-12V, DC |
| 7 | 110-8904 | 3 | Orifice-Control, Flow (0.028) |
| 8 | 110-8903 | 3 | Orifice-Control, Flow (0.055) |
| 9 | 110-8902 | 2 | Orifice-Control, Flow (0.046) |
| 10 | 354-70 | 4 | Plug-Hex, Hollow |
| 10:1 | 237-80 | 1 | O-Ring |

| Ref. | Part Number | Qty. | Description |
|---|---|---|---|
| 11 | 110-8901 | 4 | Piston-Pilot |
| 11:1 | 110-8900 | 1 | O-Ring |
| 13 | 110-0497 | 2 | Coil-Solenoid |
| 14 | 110-8899 | 1 | Valve-Relief |
| 14:1 | 105-9156 | 1 | Seal Kit |
| 15 | 340-88 | 2 | Fitting-Straight |
| 15:1 | 237-22 | 1 | O-Ring |
| 15:2 | 237-78 | 1 | O-Ring |
| 16 | 340-92 | 6 | Fitting-Straight |
| 16:1 | 237-78 | 1 | O-Ring |
| 16:2 | 237-21 | 1 | O-Ring |
| 17 | 147-3090 | 2 | Valve-Solenoid |
| 17:1 | 107-7527 | 1 | Seal Kit |
| 20 | 107-7812 | 2 | Nut-Solenoid |

● Not serviced separately

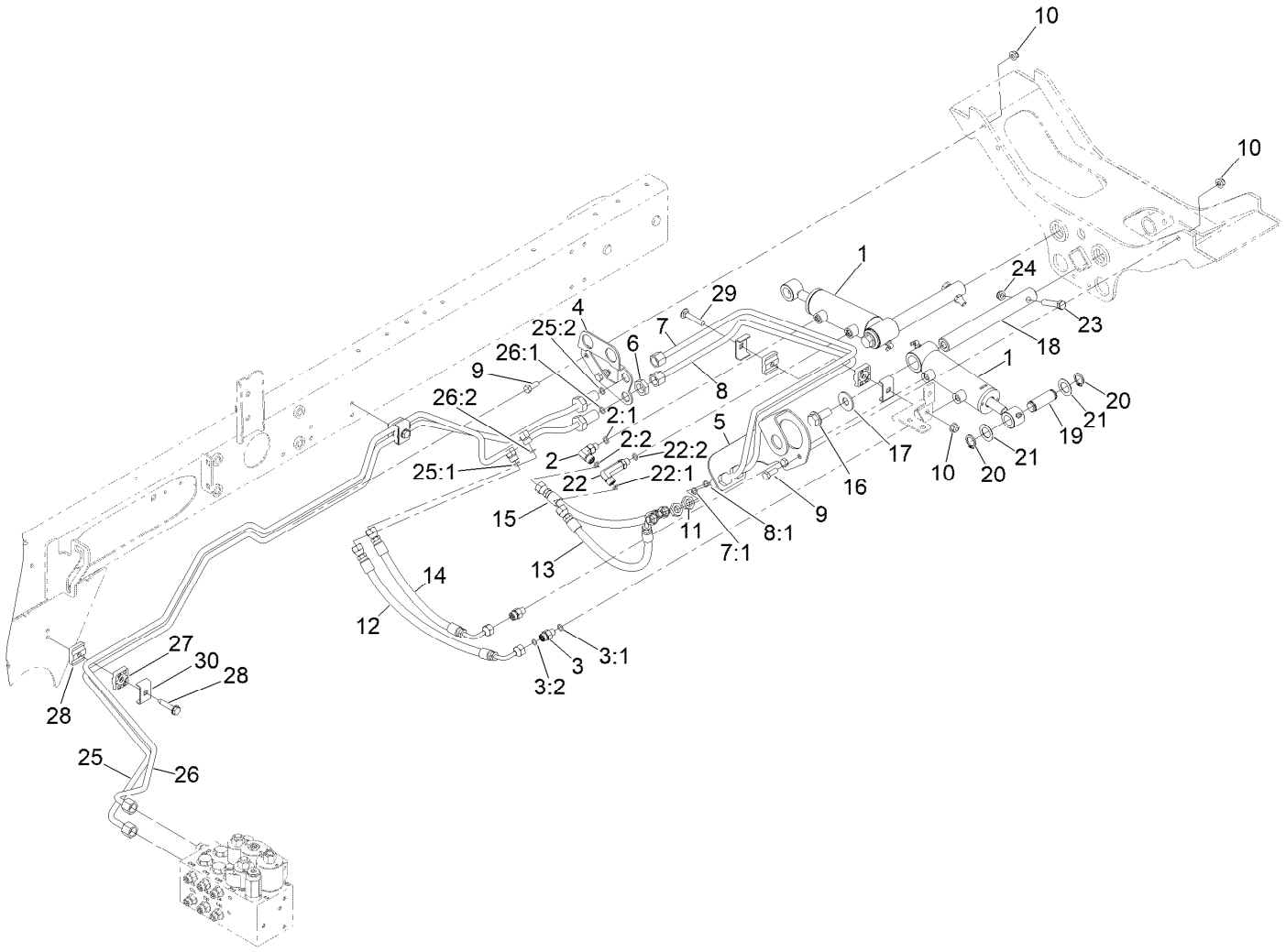


# Rear Lift Hydraulic Assembly

| Ref. | Part Number | Qty. | Description |
|---|---|---|---|
| 1 | 138-6999 | 2 | HYD Cylinder ASM |
| 2 | 340-132 | 1 | Fitting-Elbow, 90 DEG |
| 2:1 | 237-78 | 1 | O-Ring |
| 2:2 | 237-21 | 1 | O-Ring |
| 3 | 340-92 | 2 | Fitting-Straight |
| 3:1 | 237-78 | 1 | O-Ring |
| 3:2 | 237-21 | 1 | O-Ring |
| 4 | 127-2568-0P | 1 | Bracket-Bulkhead, RH |
| 5 | 127-2567-0P | 1 | Bracket-Bulkhead, LH |
| 6 | 340-70 | 2 | Nut-Lock |
| 7 | 133-2987 | 1 | Tube-ASM |
| 7:1 | 237-21 | 1 | O-Ring |
| 8 | 133-2986 | 1 | Tube-ASM |
| 8:1 | 237-21 | 1 | O-Ring |
| 9 | 322-4 | 4 | Screw-HH |
| 10 | 104-8300 | 5 | Nut-HF, NI |
| 11 | 340-78 | 2 | Nut-Lock |
| 12 | 110-0930 | 1 | Hose-HYD |
| 13 | 110-8966 | 1 | Hose-HYD |
| 14 | 110-0929 | 1 | Hose-HYD |
| 15 | 110-0931 | 1 | Hose-HYD |

| Ref. | Part Number | Qty. | Description |
|---|---|---|---|
| 16 | 3234-38 | 2 | Screw-HHF |
| 17 | 3256-6 | 2 | Washer-Flat |
| 18 | 117-0148 | 2 | Pin-Cylinder |
| 19 | 104-0046 | 2 | Pin-Slide, Cylinder |
| 20 | 32120-93 | 4 | Ring-Retaining |
| 21 | 3-6498 | 4 | Washer-Thrust |
| 22 | 100-7695 | 1 | Fitting-Elbow 90 |
| 22:1 | 237-78 | 1 | O-Ring |
| 22:2 | 237-21 | 1 | O-Ring |
| 23 | 323-9 | 2 | Screw-HH |
| 24 | 3296-59 | 2 | Nut-Lock, NI |
| 25 | 145-2555 | 1 | Hydraulic Tube ASM |
| 25:1 | 237-21 | 1 | O-Ring |
| 25:2 | 237-22 | 1 | O-Ring |
| 26 | 145-2554 | 1 | Hydraulic Tube ASM |
| 26:1 | 237-21 | 1 | O-Ring |
| 26:2 | 237-22 | 1 | O-Ring |
| 27 | 32144-57 | 2 | Screw |
| 28 | 56-7973 | 6 | Clamp-Tube |
| 29 | 3230-5 | 1 | Bolt-CARR |
| 30 | 119-1418 | 4 | Plate-Clamp, Short |

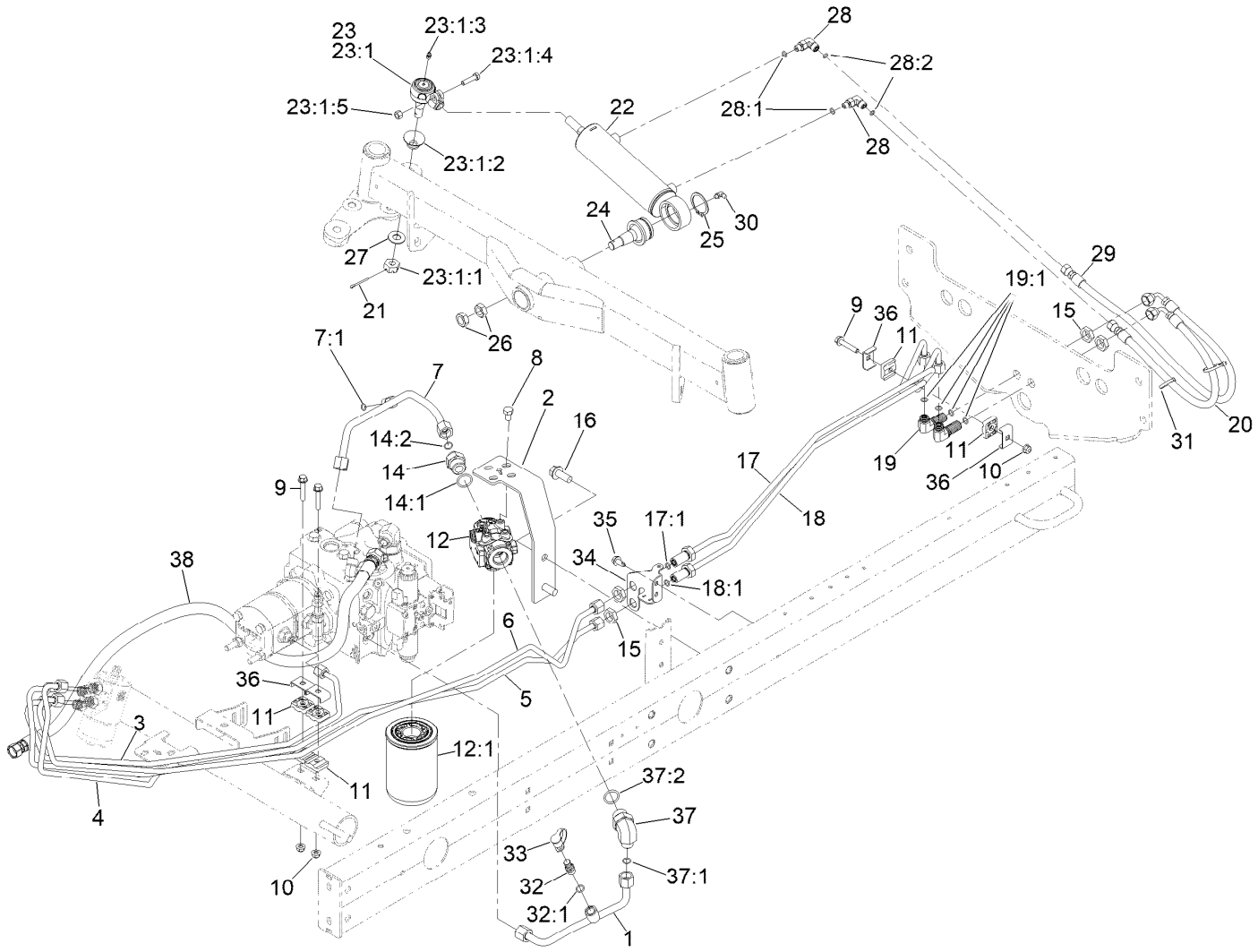


# Steering Hydraulic Assembly

| Ref. | Part Number | Qty. | Description |
|---|---|---|---|
| 1 | 144-2057 | 1 | Tube ASM-Hydraulic |
| 2 | 144-2086-0P | 1 | Bracket-Mount, Filter |
| 3 | 144-2070 | 1 | Tube ASM-Hydraulic |
| 4 | 144-2079 | 1 | Hydraulic Tube ASM |
| 5 | 144-2072 | 1 | Tube ASM-Hydraulic |
| 6 | 144-2073 | 1 | Tube ASM-Hydraulic |
| 7 | 139-6047 | 1 | Tube ASM-Hydraulic |
| 7:1 | 237-22 | 1 | O-Ring |
| 8 | 33115-016 | 4 | Screw-HH |
| 9 | 94-5780 | 3 | Screw-HWH |
| 10 | 104-8300 | 3 | Nut-HF, NI |
| 11 | 56-7973 | 6 | Clamp-Tube |
| 12 | 93-2242 | 1 | Oil Filter ASM |
| 12:1 | 75-1310 | 1 | Filter-HYD |
| 14 | 100-4240 | 1 | Fitting-STR |
| 14:1 | 237-30 | 1 | O-Ring |
| 14:2 | 237-81 | 1 | O-Ring |
| 15 | 340-70 | 4 | Nut-Lock |

| Ref. | Part Number | Qty. | Description |
|---|---|---|---|
| 16 | 3234-38 | 2 | Screw-HHF |
| 17 | 136-3729 | 1 | Hydraulic Tube ASM |
| 17:1 | 237-22 | 1 | O-Ring |
| 18 | 127-2338 | 1 | Tube ASM |
| 18:1 | 237-22 | 1 | O-Ring |
| 19 | 340-154 | 2 | Union-Bulkhead |
| 19:1 | 237-22 | 2 | O-Ring |
| 20 | 110-0928 | 1 | Hose-HYD |
| 21 | 3272-12 | 1 | Pin-Cotter |
| 22 | 110-9035 | 1 | HYD Cylinder ASM |
| 23 | 106-6895-03 | 1 | Ball Joint ASM |
| 23:1 | | 1 | Joint-Ball ● |
| 23:1:1 | 32136-13 | 1 | Nut-SHH |
| 23:1:2 | 106-6896 | 1 | Seal |
| 23:1:3 | 302-5 | 1 | Fitting-Grease |
| 23:1:4 | 3210-7 | 1 | Screw-HH |
| 23:1:5 | 32152-5 | 1 | Nut-Hex |
| 24 | 106-6774 | 1 | Joint-Ball |

● Not serviced separately

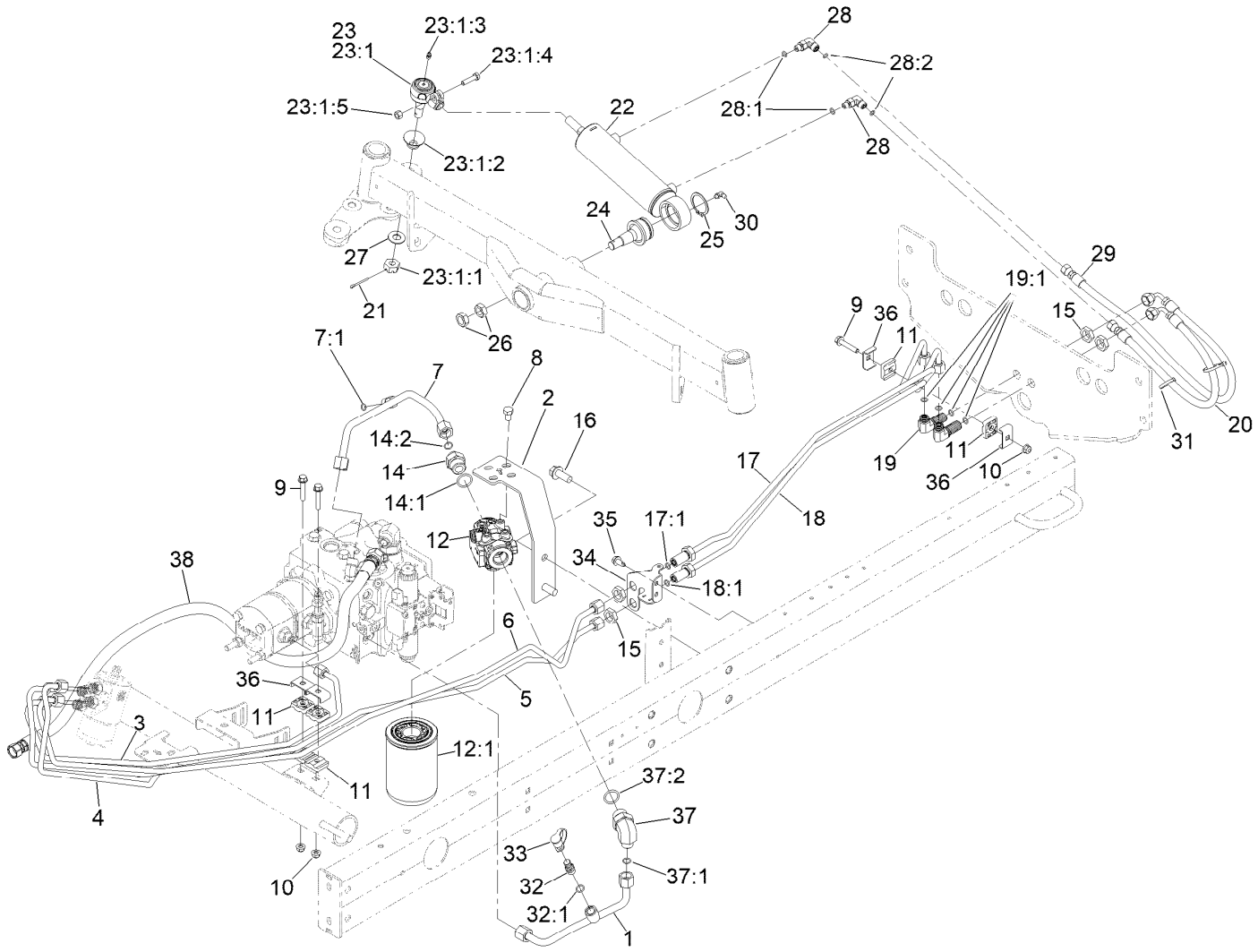


# Steering Hydraulic Assembly (continued)

| Ref. | Part Number | Qty. | Description |
|---|---|---|---|
| 25 | 32151-104 | 1 | Ring-Retaining, External |
| 26 | 3220-6 | 2 | Nut-Jam |
| 27 | 69-8980 | 1 | Washer |
| 28 | 340-132 | 2 | Fitting-Elbow, 90 DEG |
| 28:1 | 237-78 | 1 | O-Ring |
| 28:2 | 237-21 | 1 | O-Ring |
| 29 | 110-0973 | 1 | Hose-HYD |
| 30 | 302-40 | 1 | Fitting-Grease, 90 DEG |
| 31 | 3290-378 | 2 | Tie-Cable |
| 32 | 59-7410 | 1 | Fitting-Diagnostic |

| Ref. | Part Number | Qty. | Description |
|---|---|---|---|
| 32:1 | 237-42 | 1 | O-Ring |
| 33 | 353-947 | 1 | Cap-Dust, Black |
| 34 | 127-2341-0P | 1 | Brkt-Bulkhead, Steer |
| 35 | 32104-32 | 2 | Screw-HWH |
| 36 | 119-1418 | 4 | Plate-Clamp, Short |
| 37 | 340-131 | 1 | Fitting-HYD, 90 DEG |
| 37:1 | 237-30 | 1 | O-Ring |
| 37:2 | 237-81 | 1 | O-Ring |
| 38 | 144-2077 | 1 | Hose ASM-Hydraulic |

● Not serviced separately

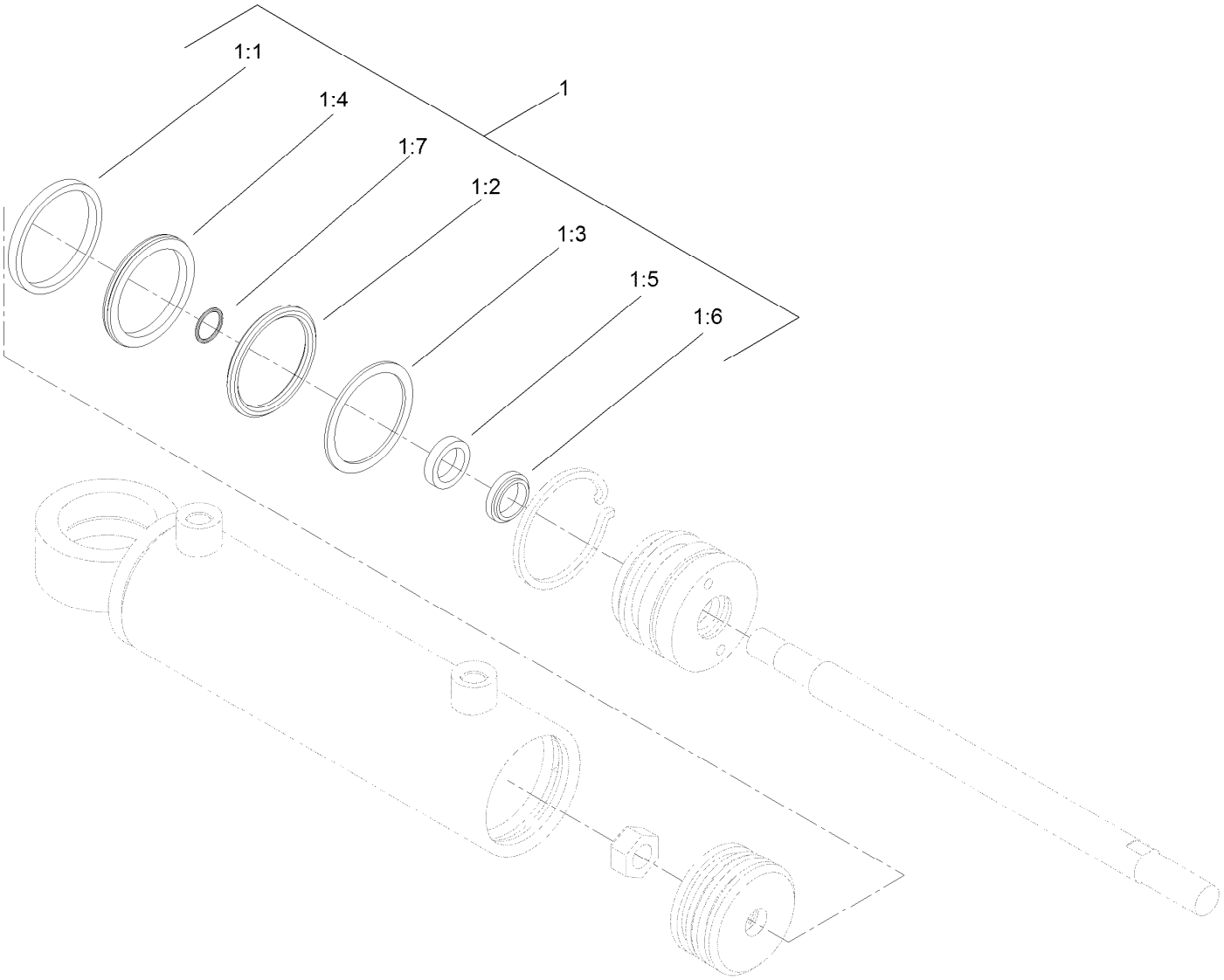


# Hydraulic Cylinder Assembly No. 110-9035

| *Ref.* | *Part Number* | *Qty.* | *Description* |
|---|---|---|---|
| 1 | 114-8875 | 1 | Seal Kit |
| 1:1 | | 1 | O-Ring ● |
| 1:2 | | 1 | Backup ● |
| 1:3 | | 1 | Bp Seal ● |
| 1:4 | | 1 | Wear Ring ● |
| 1:5 | | 1 | Bt Seal ● |
| 1:6 | | 1 | Dust Seal ● |
| 1:7 | | 1 | O-Ring ● |

● Not serviced separately

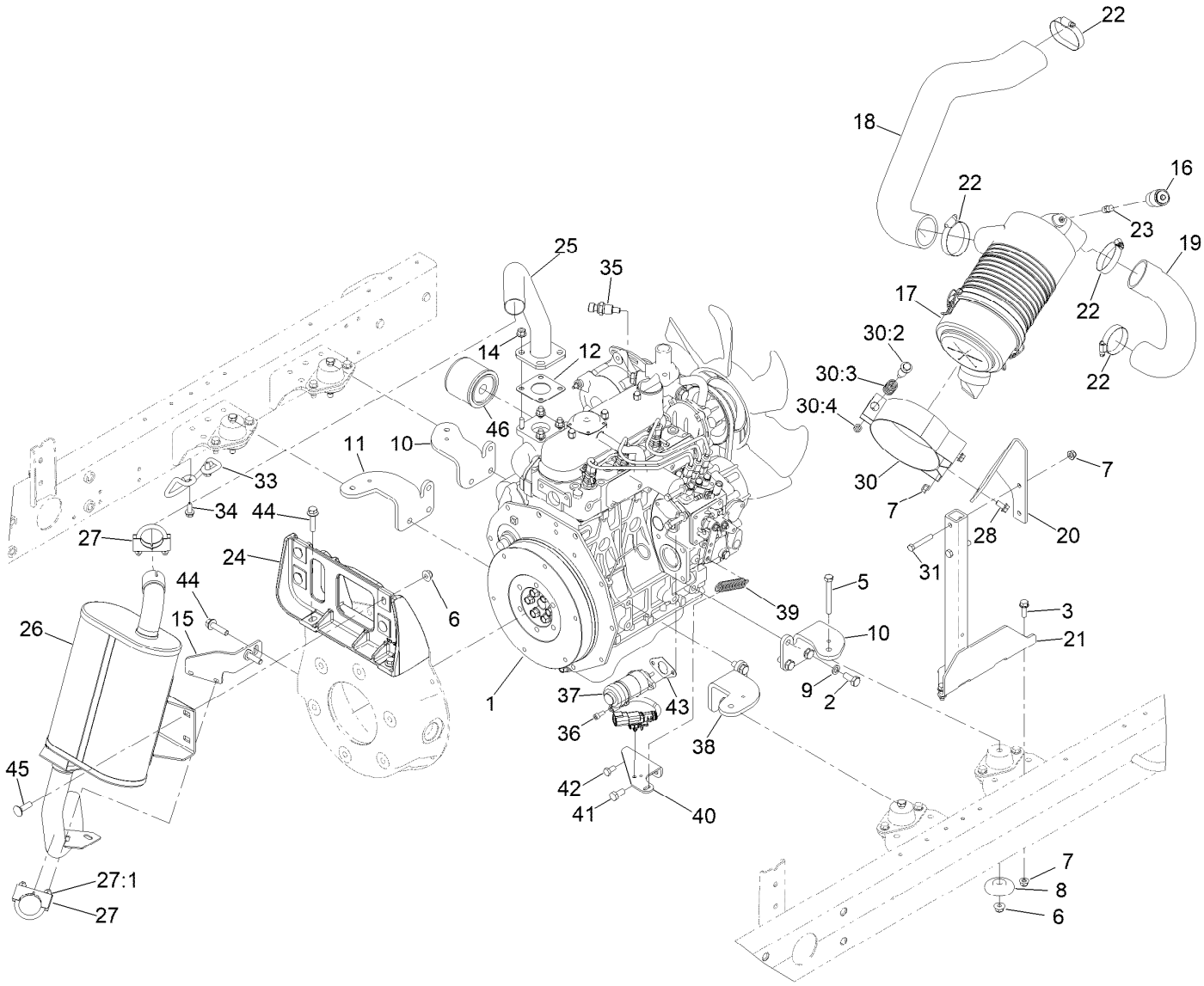


# Engine, Air Cleaner and MufflerAssembly

| Ref. | Part Number | Qty. | Description |
|---|---|---|---|
| 1 | 138-6909 | 1 | Engine-Kubota, D1105 |
| 2 | 43-0090 | 12 | Screw-HH |
| 3 | 3234-29 | 3 | Screw-HHF |
| 5 | 323-14 | 4 | Screw-HH |
| 6 | 104-8301 | 8 | Nut-HF, NI |
| 7 | 104-8300 | 7 | Nut-HF, NI |
| 8 | 138-6462 | 4 | Support-Isolator |
| 9 | 48-9590 | 12 | Washer-Lock |
| 10 | 115-8066-0P | 2 | Mount-Engine |
| 11 | 115-8063-0P | 1 | Mount-Engine RH |
| 12 | 99-8343 | 1 | Gasket-Muffler |
| 14 | 104-2612 | 4 | Nut-HF |
| 15 | 147-6082-0P | 1 | Bracket-Tailpipe |
| 16 | 93-9164 | 1 | Indicator-Mini |
| 17 | 106-5277 | 1 | Air Cleaner ASM |
| 18 | 127-2696 | 1 | Hose-Formed |
| 19 | 117-5164 | 1 | Hose-Formed |
| 20 | 127-2695-0P | 1 | Bracket-Air Cleaner |
| 21 | 121-5610-0P | 1 | Stand W.A. Air Cleaner (Welded) |
| 22 | 2412-130 | 4 | Clamp-Hose |

| Ref. | Part Number | Qty. | Description |
|---|---|---|---|
| 23 | 94-1416 | 1 | Adapter-Indicator |
| 24 | 127-2550 | 1 | Bracket-Muffler |
| 25 | 127-2698 | 1 | Header-Exhaust |
| 26 | 127-2503 | 1 | Muffler-Exhaust |
| 27 | 2112-9 | 2 | Clamp |
| 27:1 | 32128-20 | 2 | Nut-HF |
| 28 | 3234-14 | 2 | Screw-HHF |
| 30 | 100-4825 | 1 | Band-Mounting, Air Cleaner |
| 30:2 | 94-3653 | 1 | Bolt |
| 30:3 | 94-3654 | 1 | Spring |
| 30:4 | 33024-00 | 1 | Nut-Lock, NI |
| 31 | 322-10 | 2 | Screw-HH |
| 33 | 127-2612 | 1 | Guard-Pipe, Tail |
| 34 | 32104-32 | 2 | Screw-HWH |
| 35 | 119-4478 | 1 | Sender-Temperature |
| 36 | 105-2409 | 2 | Screw-HSH |
| 37 | 125-1562 | 1 | Actuator-Fuel |
| 38 | 115-8068-0P | 1 | Mount-Engine, LH |
| 39 | 107-1045 | 1 | Spring-Extension |
| 40 | 125-1472-0P | 1 | Bracket-Spring, Throttle |
| 41 | 63-7790 | 1 | Screw-Cap |

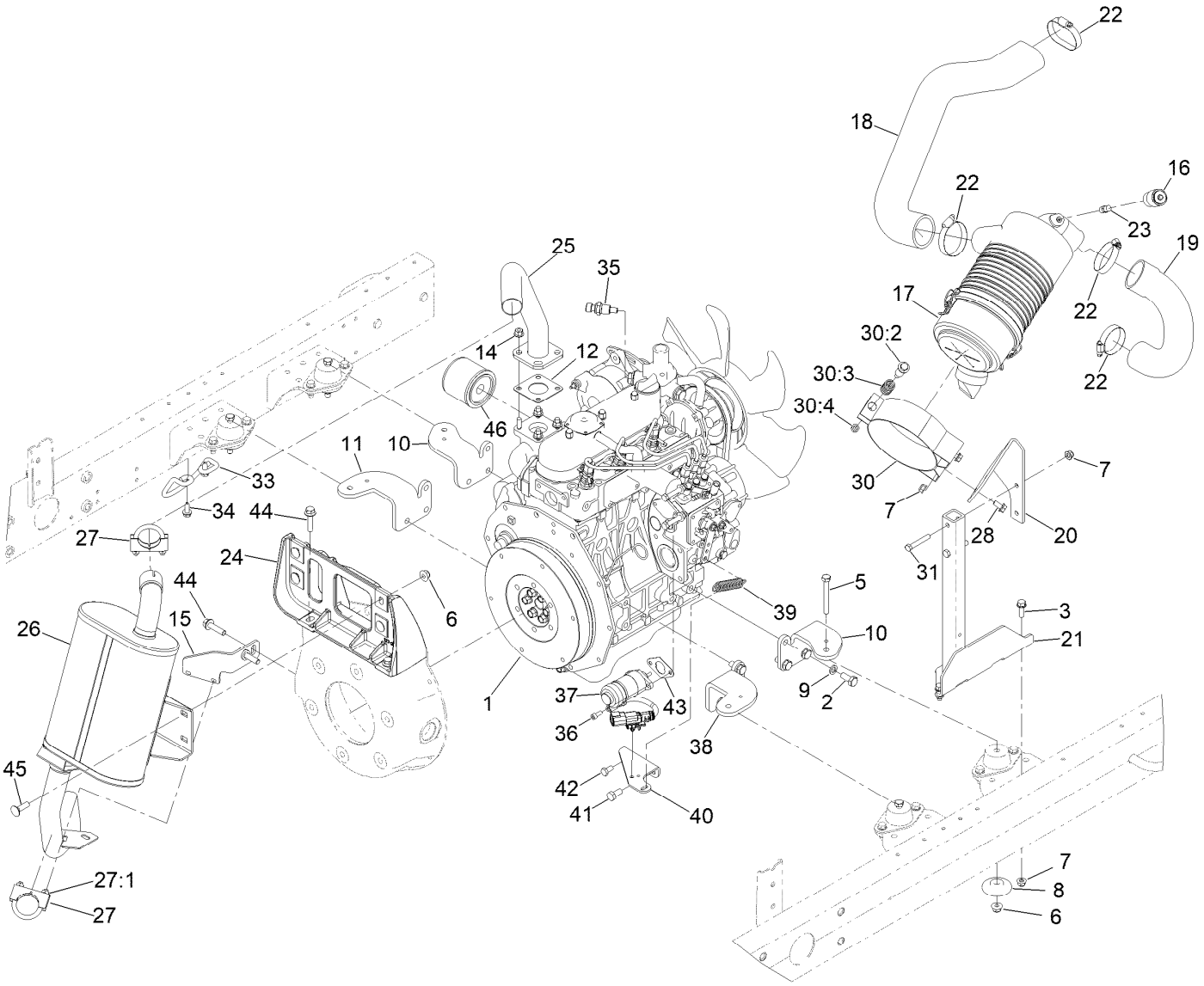


# Engine, Air Cleaner and MufflerAssembly (continued)

| Ref. | Part Number | Qty. | Description |
|---|---|---|---|
| 42 | 33114-016 | 1 | Screw-HH |
| 43 | 127-2507 | 1 | Gasket-Actuator, Fuel (F/W Actuator) |
| 44 | 114-4681 | 6 | Screw-HHF |
| 45 | 3231-25 | 4 | Bolt-CARR |
| 46 | 108-3841 | 1 | Filter-Oil |

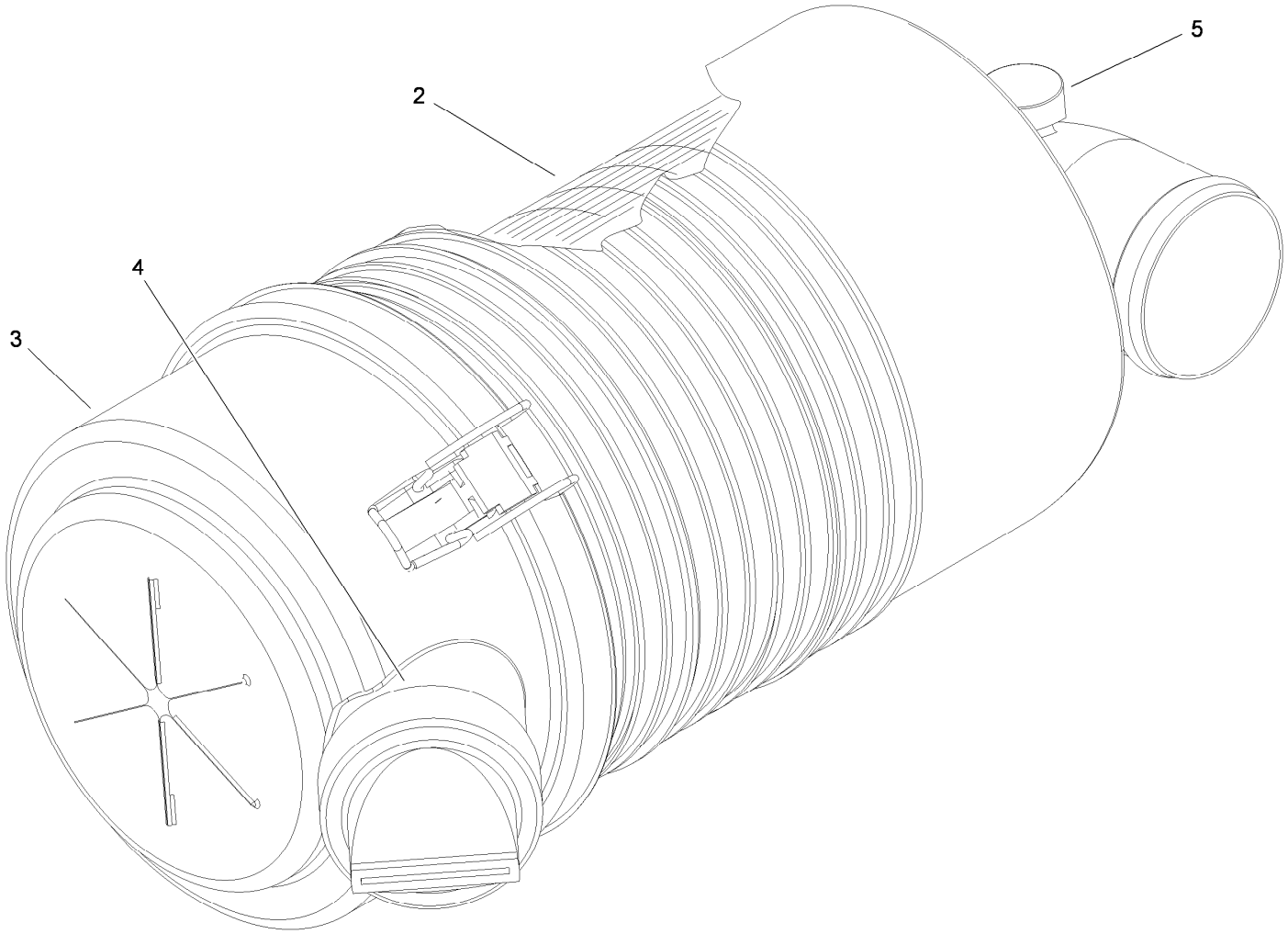


# Air Cleaner Assembly No. 106-5277

| *Ref.* | *Part Number* | *Qty.* | *Description* |
|---|---|---|---|
| 2 | 108-3810 | 1 | Filter-Air |
| 3 | 98-9771 | 1 | Cover ASM |
| 4 | 87-9400 | 1 | Valve-Vacuator |
| 5 | 285-17 | 1 | Plug-Pipe |

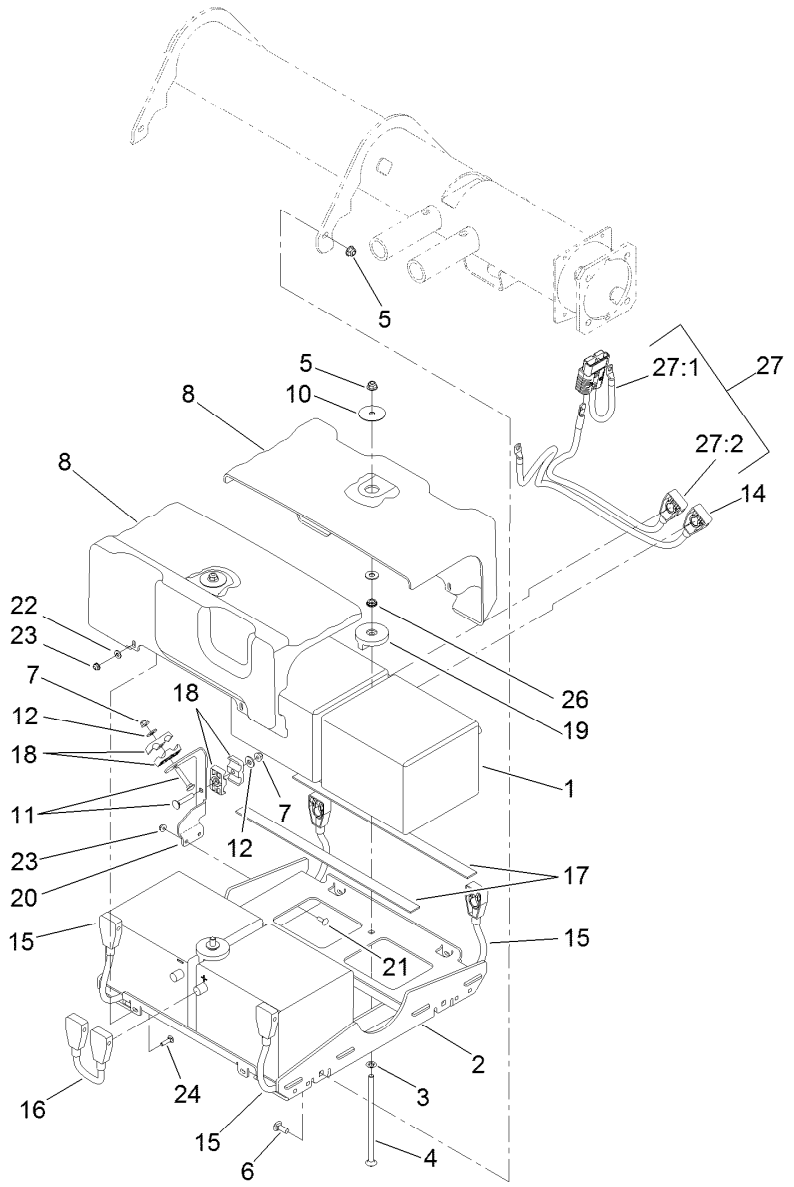


# 48 Volt Battery Assembly

| Ref. | Part Number | Qty. | Description |
|---|---|---|---|
| 1 | 136-3726 | 4 | Battery-12V Agm 35-650 |
| 2 | 136-3708-01 | 1 | Tray ASM [red] |
| 3 | 107-3154 | 2 | Nut-Push |
| 4 | 120-4743 | 2 | Screw-CARR |
| 5 | 104-8301 | 6 | Nut-HF, NI |
| 6 | 3231-2 | 4 | Bolt-CARR |
| 7 | 104-8300 | 2 | Nut-HF, NI |
| 8 | 136-3709 | 2 | Cover-Battery |
| 10 | 120-2229 | 2 | Washer |
| 11 | 3230-7 | 2 | Bolt-CARR |
| 12 | 3256-3 | 2 | Washer-Flat |
| 14 | 122-3550 | 1 | Cable-Battery, Bk ASM |
| 15 | 122-0133 | 2 | Positive Battery Cable ASM |
| 16 | 122-0134 | 1 | Jumper-Cable-Battery (Positive) |

| Ref. | Part Number | Qty. | Description |
|---|---|---|---|
| 17 | 127-2306 | 4 | Strip-Foam |
| 18 | 56-7974 | 4 | Clamp-Tube |
| 19 | 127-2393 | 2 | Hold Down-Battery |
| 20 | 127-2517-01 | 1 | Bracket-Cable |
| 21 | 3229-1 | 2 | Screw-CARR |
| 22 | 3256-78 | 4 | Washer-Flat |
| 23 | 104-7201 | 6 | Nut-HF, NI |
| 24 | 3229-2 | 4 | Screw-CARR |
| 26 | 3217-7 | 2 | Nut-Hex |
| 27 | 122-3700 | 1 | Cable-Battery |
| 27:1 | 122-0267 | 1 | Positive Battery Cable ASM |
| 27:2 | 122-3551 | 1 | Cable-Battery, Rd ASM |

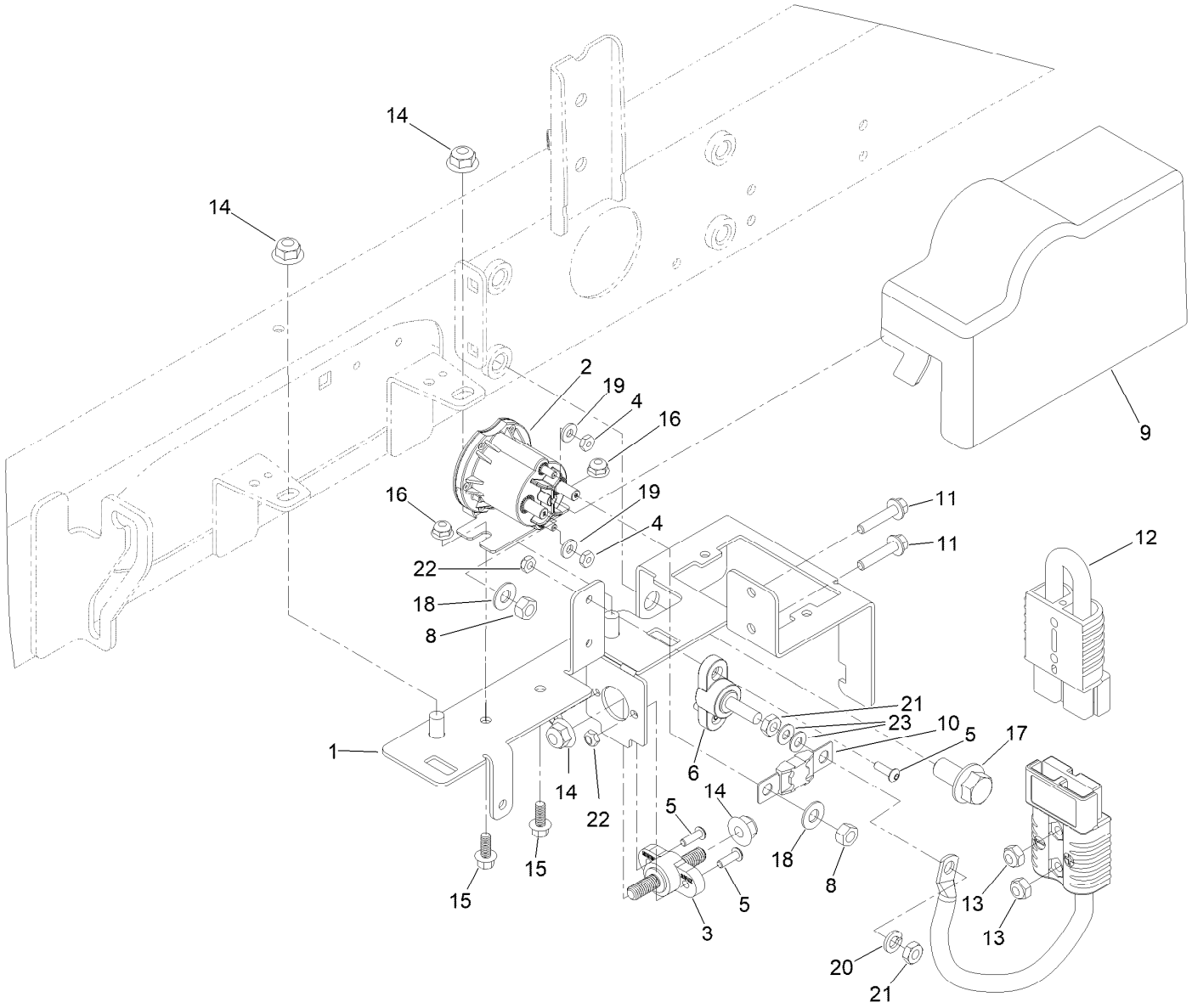


# 48 Volt Contactor Assembly

| Ref. | Part Number | Qty. | Description |
|---|---|---|---|
| 1 | 145-2452 | 1 | Bracket ASM, 48V |
| 2 | 122-2640 | 1 | Contactor-DC, 48V |
| 3 | 122-2411 | 1 | Block-Junction, Black |
| 4 | 3219-14 | 2 | Nut-Hex |
| 5 | 3274-39 | 4 | Screw-HSBH |
| 6 | 122-3514 | 1 | Block-Junction, 5/16-18 |
| 8 | 3219-2 | 2 | Nut-Hex |
| 9 | 145-2465 | 1 | Cover-Electrical |
| 10 | 127-2305 | 1 | Fuse-250 Amp |
| 11 | 127-8639 | 2 | Screw-HHF |
| 12 | 122-0136 | 1 | Cable-Battery, Positive Jumper ASM |

| Ref. | Part Number | Qty. | Description |
|---|---|---|---|
| 13 | 3296-16 | 2 | Nut-Lock, NI |
| 14 | 104-8301 | 4 | Nut-HF, NI |
| 15 | 99-6810 | 2 | Screw-HHF |
| 16 | 104-7201 | 2 | Nut-HF, NI |
| 17 | 3234-6 | 1 | Screw-HHF |
| 18 | 107-0279 | 2 | Washer |
| 19 | 3256-14 | 2 | Washer-Flat |
| 20 | 3253-4 | 1 | Washer-Lock |
| 21 | 3218-2 | 1 | Nut-Hex Jam |
| 22 | 3296-12 | 4 | Nut-Lock, NI |
| 23 | 120-9683 | 2 | Washer-Plain |

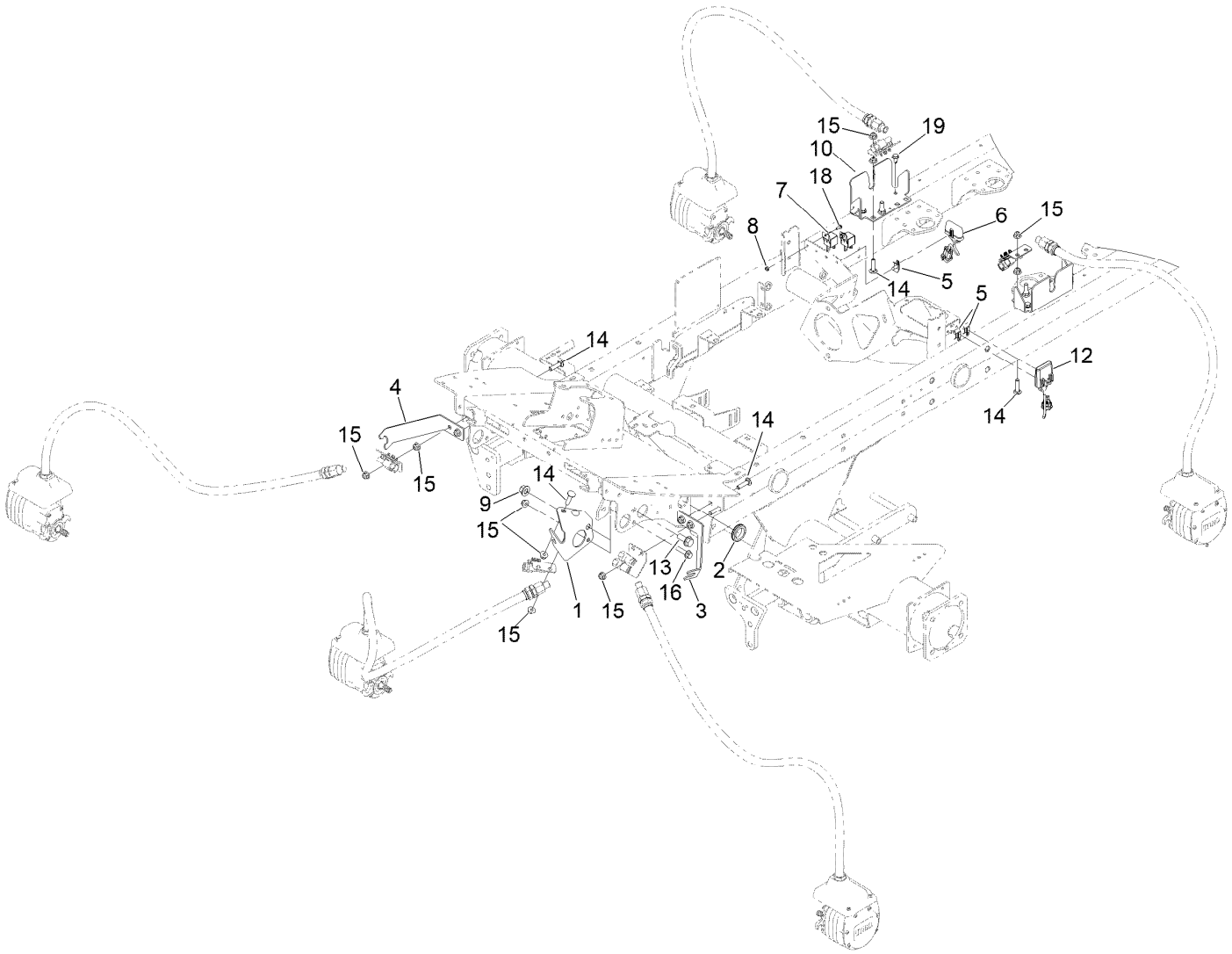


# Reel Motor Plumbing Assembly

| Ref. | Part Number | Qty. | Description |
|---|---|---|---|
| 1 | 125-1460-01 | 1 | Bracket-Bulkhead, Center |
| 2 | 240-3 | 2 | Grommet-Rubber |
| 3 | 127-2314-01 | 1 | Bracket-Bulkhead |
| 4 | 127-2317-01 | 1 | Bracket-Bulkhead |
| 5 | 32180-011 | 3 | Clip-Connector |
| 6 | 112-9630 | 1 | Module-Reel, I.D. |
| 7 | 99-7435 | 2 | Relay |
| 8 | 3296-2 | 2 | Nut-Lock, NI |
| 9 | 99-5107 | 1 | Nut-Lock |
| 10 | 125-1458-03 | 2 | Bracket-Bulkhead, Rear |
| 12 | 119-4330 | 1 | Isolated Can Module ASM |
| 13 | 3234-38 | 1 | Screw-HHF |
| 14 | 127-2351 | 10 | Screw-CARR |
| 15 | 104-8301 | 16 | Nut-HF, NI |
| 16 | 114-4681 | 1 | Screw-HHF |
| 18 | 3290-321 | 2 | Screw-HWH |
| 19 | 32104-32 | 4 | Screw-HWH |

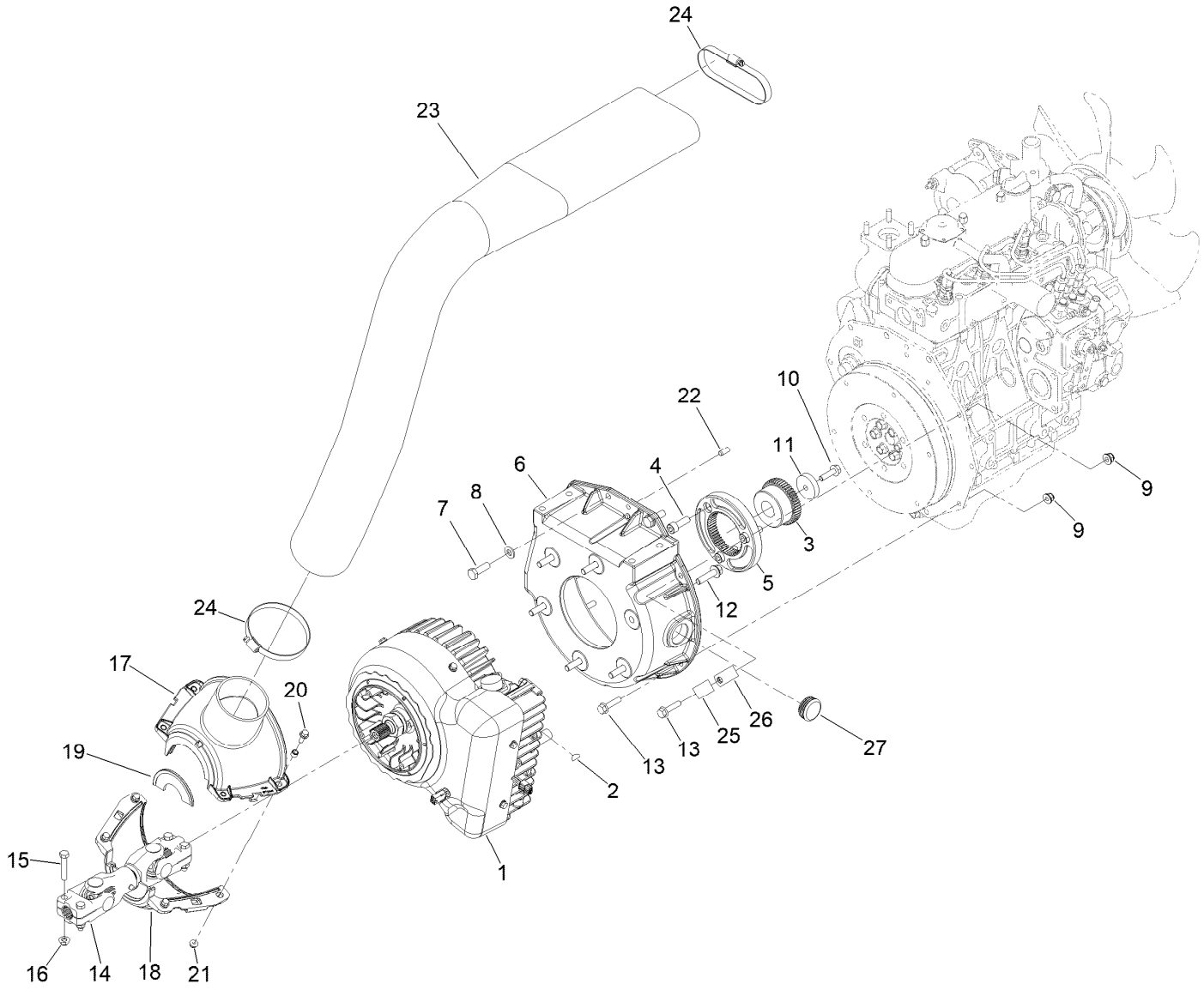


# Generator And Drive Shaft Assembly

| Ref. | Part Number | Qty. | Description |
|---|---|---|---|
| 1 | 127-2655 | 1 | Generator/Controller ASM |
| 2 | 127-2318 | 1 | Key-Woodruff |
| 3 | 127-2635 | 1 | Hub-Coupler |
| 4 | 108-1420 | 3 | Screw-HSH |
| 5 | 125-1179 | 1 | Flange-Coupler |
| 6 | 127-2380 | 1 | Bellhousing |
| 7 | 95-8812 | 2 | Screw-HH |
| 8 | 3256-80 | 2 | Washer-Plain |
| 9 | 104-3082 | 2 | Nut-Lock, HHF |
| 10 | AU100874 | 1 | Screw-HHF |
| 11 | 127-2374 | 1 | Collar |
| 12 | 114-4681 | 6 | Screw-HHF |
| 13 | 33104-035 | 7 | Screw-HHF |
| 14 | 139-6044 | 1 | Driveshaft ASM |

| Ref. | Part Number | Qty. | Description |
|---|---|---|---|
| 15 | 323-9 | 4 | Screw-HH |
| 16 | 104-8301 | 4 | Nut-HF, NI |
| 17 | 127-2465 | 1 | Shroud ASM |
| 18 | 127-2442 | 1 | Shroud-Intake, Bottom |
| 19 | 127-2434 | 2 | Seal-Brush |
| 20 | 120-9678 | 4 | Screw-HHF |
| 21 | 104-7201 | 4 | Nut-HF, NI |
| 22 | 87-1910 | 2 | Pin-Dowel |
| 23 | 161-8388 | 1 | Hose-Intake, Formed |
| 24 | 2412-46 | 2 | Clamp |
| 25 | 2412-39 | 1 | Clamp-R |
| 26 | 2412-41 | 1 | Clamp-R |
| 27 | 110-9012 | 1 | Caplug |

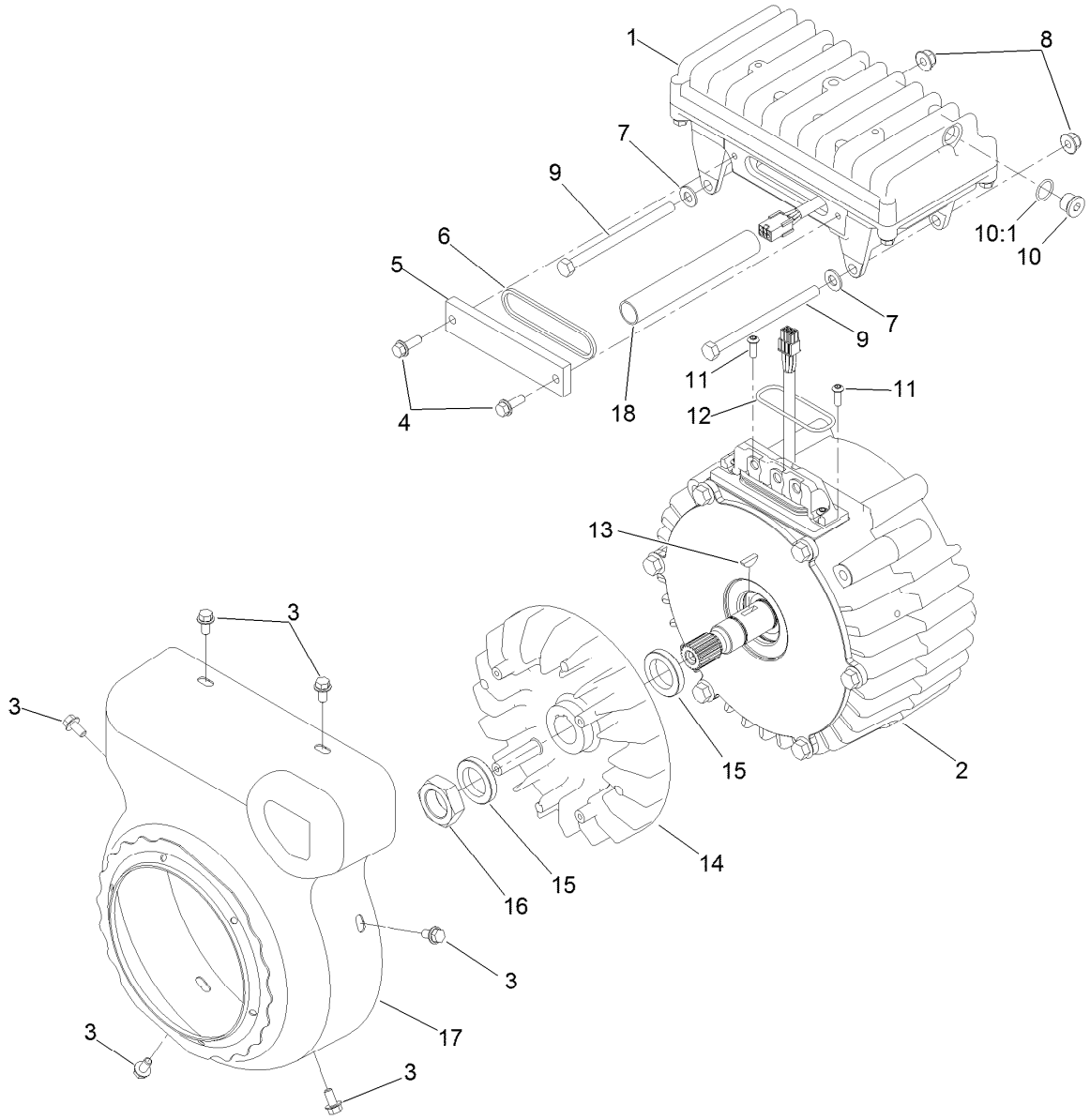


# Generator/Controller Assembly No. 127-2655

| *Ref.* | *Part Number* | *Qty.* | *Description* |
|---|---|---|---|
| 1 | 117-8181 | 1 | Controller ASM |
| 2 | 127-2653 | 1 | Generator Service ASM |
| 3 | 119-1065 | 6 | Screw-Lock,HF |
| 4 | 119-1138 | 2 | Screw-HHF,Patch |
| 5 | 120-4511 | 1 | Cover-Access |
| 6 | 120-4513 | 1 | Gasket-Cover, Access |
| 7 | 3256-23 | 2 | Washer-Plain |
| 8 | 104-8300 | 2 | Nut-HF, NI |
| 9 | 322-38 | 2 | Screw-HH |
| 10 | 353-989 | 1 | Plug-Hex, Hollow |

| *Ref.* | *Part Number* | *Qty.* | *Description* |
|---|---|---|---|
| 10:1 | 237-42 | 1 | O-Ring |
| 11 | 119-7568 | 2 | Screw-HSBH |
| 12 | 117-8176 | 1 | O-Ring |
| 13 | 127-2318 | 1 | Key-Woodruff |
| 14 | 125-1188 | 1 | Fan-Generator |
| 15 | 125-1185 | 2 | Spacer |
| 16 | 125-1187 | 1 | Nut |
| 17 | 127-2444 | 1 | Cover-Generator |
| 18 | 127-2747 | 1 | Sleeve-Harness, Expandable |

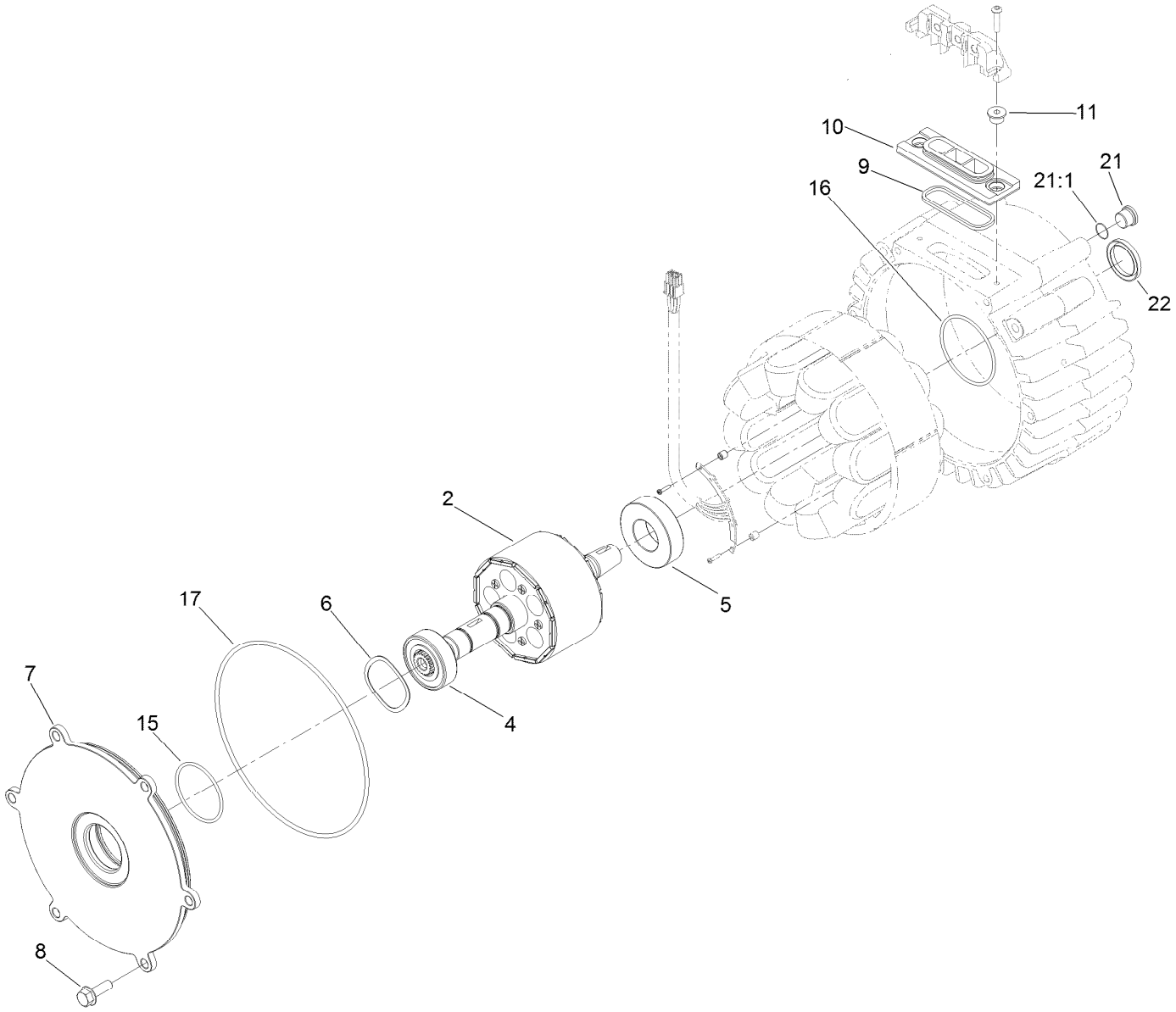


# Generator Assembly No. 127-2653

| *Ref.* | *Part Number* | *Qty.* | *Description* |
|---|---|---|---|
| 2 | 127-2651 | 1 | Rotor |
| 4 | 120-4621 | 1 | Bearing |
| 5 | 120-4622 | 1 | Bearing |
| 6 | 117-8148 | 1 | Washer-Wave |
| 7 | 117-4514 | 1 | Cover-Generator |
| 8 | 33104-025 | 6 | Screw-HHF |
| 9 | 120-4518 | 1 | Gasket-Isolator |
| 10 | 112-5155 | 1 | Isolator-Thermal |
| 11 | 117-4501 | 2 | Spacer-Shoulder |
| 15 | 107-3244 | 1 | O-Ring |
| 16 | 117-8177 | 1 | O-Ring |
| 17 | 112-5199 | 1 | O-Ring |
| 21 | 353-989 | 1 | Plug-Hex, Hollow |
| 21:1 | 237-42 | 1 | O-Ring |
| 22 | 125-1509 | 1 | Seal |

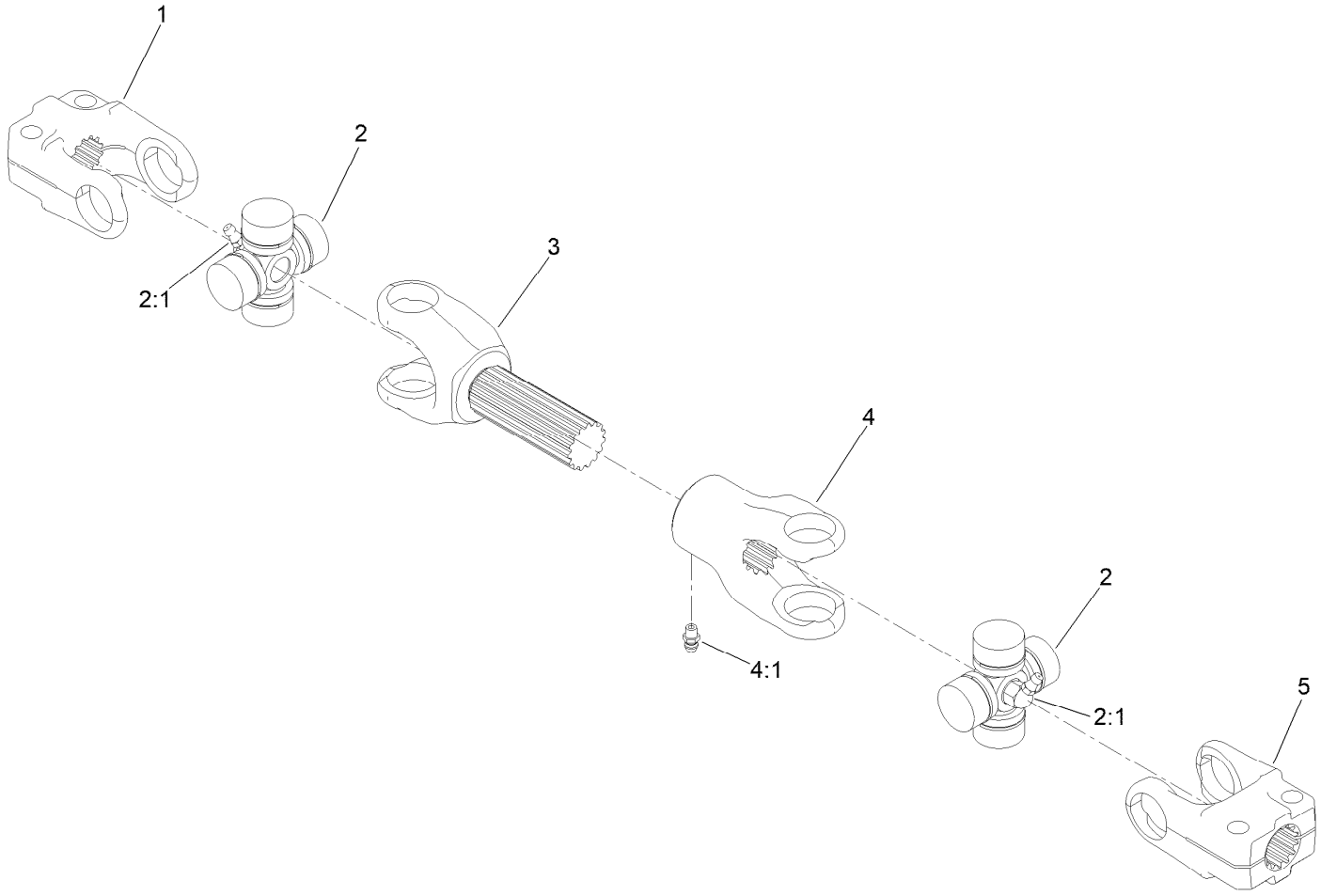


# Driveshaft Assembly No. 139-6044

| *Ref.* | *Part Number* | *Qty.* | *Description* |
|---|---|---|---|
| 1 | 54-9040 | 1 | Yoke-End |
| 2 | 112-1687 | 2 | Cross And Bearing Kit |
| 2:1 | 62-3820 | 1 | Fitting-Grease |
| 3 | 127-2553 | 1 | Yoke-Shaft |
| 4 | 127-2554 | 1 | Yoke-Telescoping |
| 4:1 | 302-22 | 1 | Fitting-Grease |
| 5 | 145-2535 | 1 | Yoke-Driveshaft, 13T |

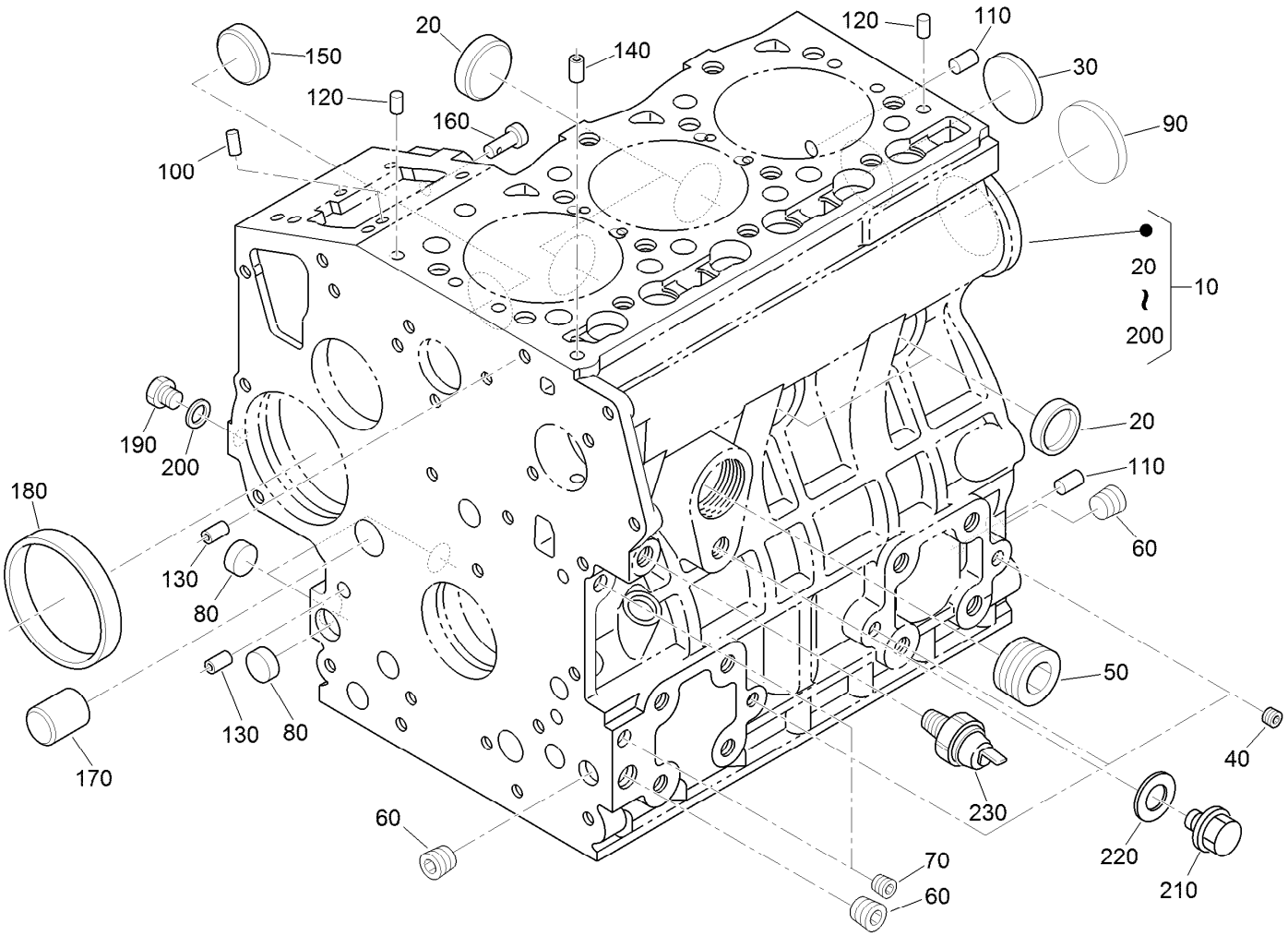


# Crankcase Assembly

| Ref. | Part Number | Qty. | Description |
|---|---|---|---|
| 10 | 115-3443 | 1 | Crankcase ASM |
| 20 | 98-9398 | 4 | Cap-Sealing |
| 30 | 98-7539 | 1 | Cap-Sealing |
| 40 | 98-9687 | 3 | Plug |
| 50 | 105-3779 | 1 | Plug |
| 60 | 98-9597 | 3 | Plug |
| 70 | 98-7487 | 2 | Plug |
| 80 | 98-9379 | 3 | Plug-Expansion |
| 90 | 98-9668 | 1 | Plug-Expansion |
| 100 | 98-9375 | 2 | Pin-Straight |
| 110 | 98-9377 | 2 | Pin-Straight |
| 120 | 98-9376 | 2 | Pin-Straight |

| Ref. | Part Number | Qty. | Description |
|---|---|---|---|
| 130 | 98-9387 | 2 | Pin-Pipe |
| 140 | 98-9539 | 1 | Pin-Pipe |
| 150 | 98-9599 | 1 | Plug |
| 160 | 98-9630 | 1 | Pin-Spring, Start |
| 170 | 98-9675 | 1 | Plug |
| 180 | 98-9656 | 1 | Bushing-Governor, Gear |
| 190 | 120-2559 | 1 | Plug |
| 200 | 98-7428 | 1 | Gasket |
| 210 | 99-3447 | 1 | Plug |
| 220 | 106-7056 | 1 | Gasket |
| 230 | 98-9416 | 1 | Switch-Oil |

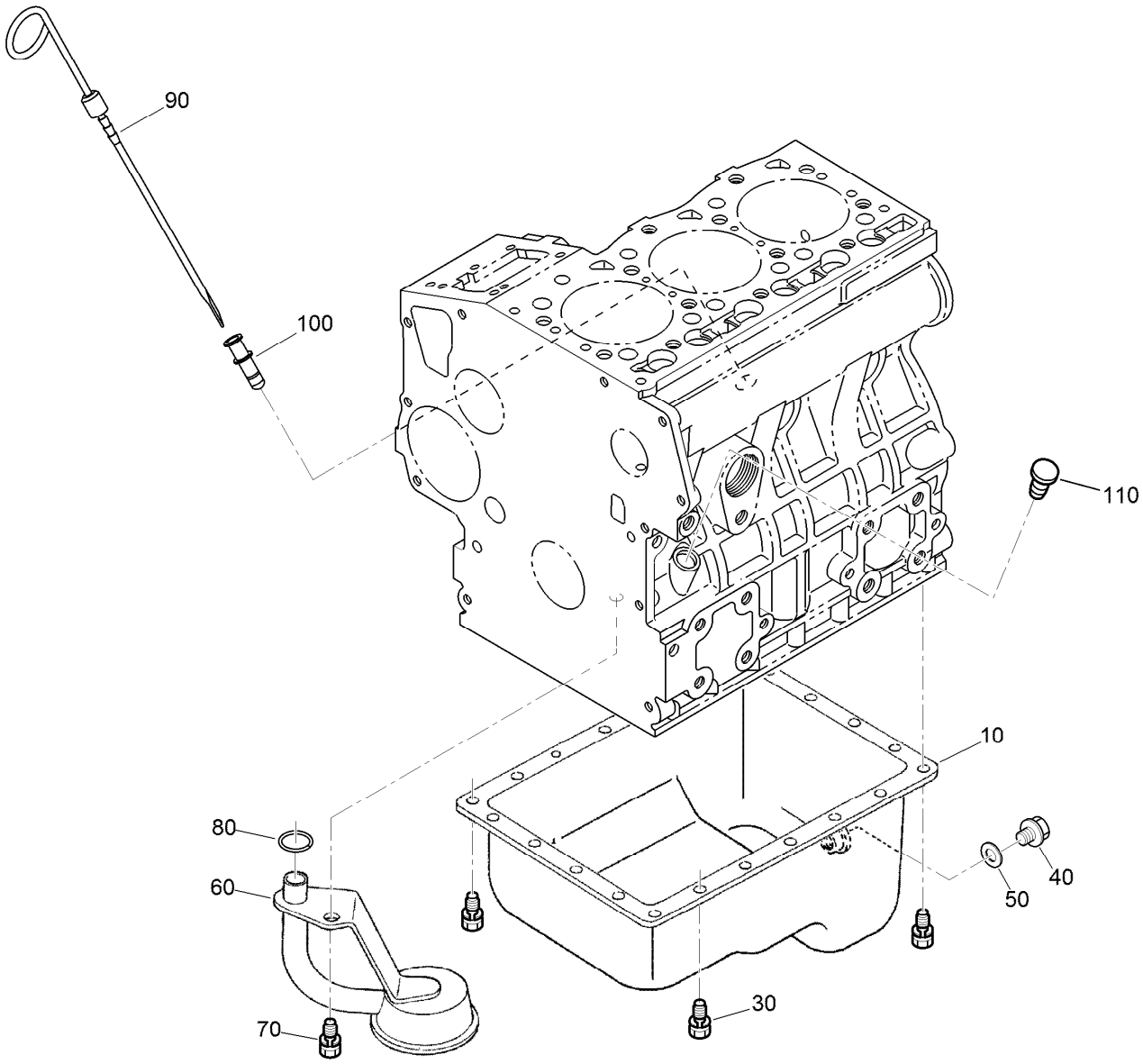


# Oil Pan and Dipstick Assembly

| *Ref.* | *Part Number* | *Qty.* | *Description* |
|---|---|---|---|
| 10 | 112-0179 | 1 | Pan-Oil |
| 30 | 98-9351 | 22 | Bolt |
| 40 | 114-8151 | 1 | Plug-Drain |
| 50 | 98-7524 | 1 | Gasket |
| 60 | 108-1401 | 1 | Base-Filter |
| 70 | 98-7526 | 1 | Bolt |
| 80 | 105-3776 | 1 | O-Ring |
| 90 | 104-9348 | 1 | Gauge-Oil |
| 100 | 105-4580 | 1 | Guide-Gauge, Oil |
| 110 | 110-3720 | 1 | Plug-Gauge, Oil |

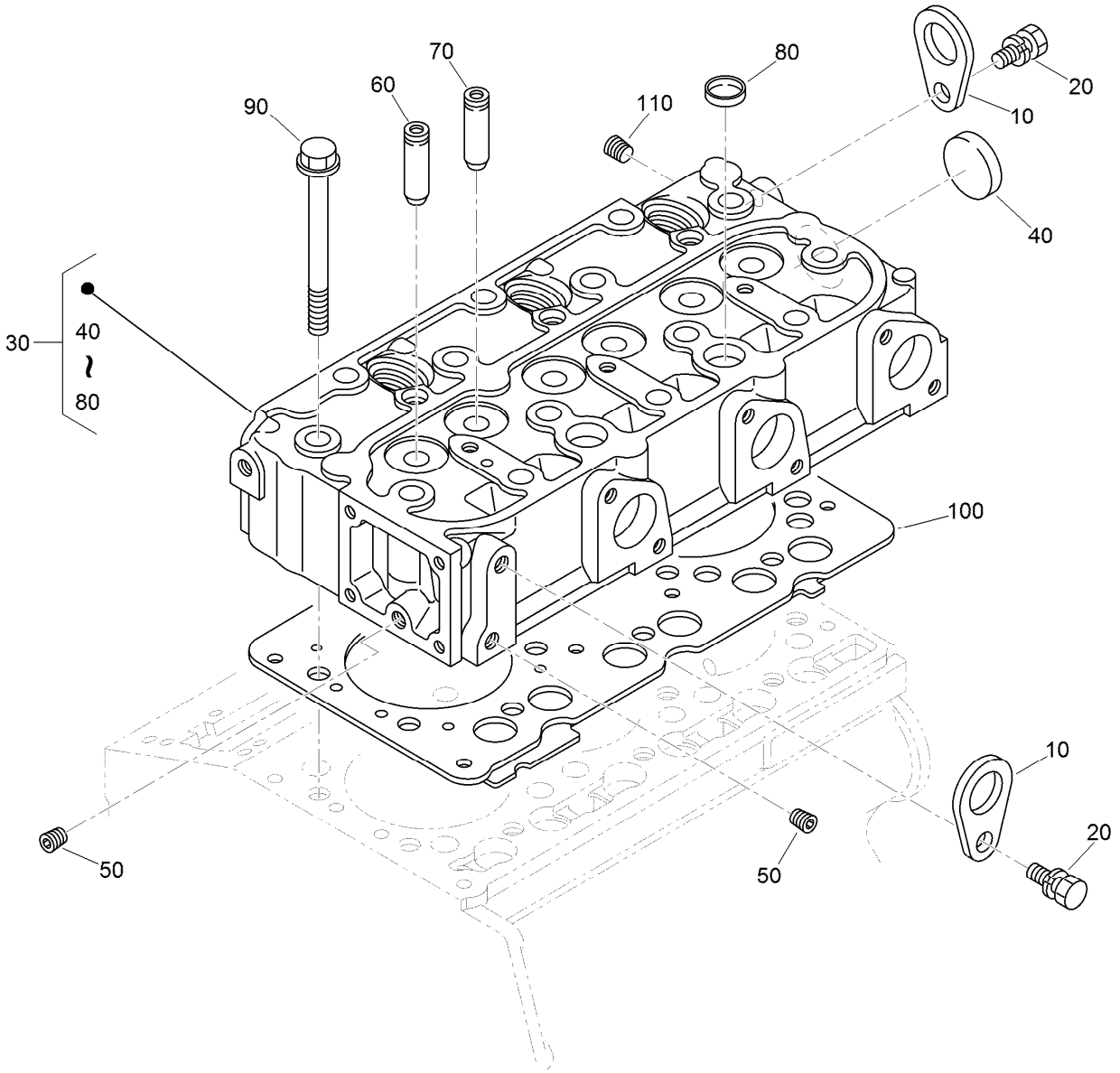


# Cylinder Head Assembly

| *Ref.* | *Part Number* | *Qty.* | *Description* |
|---|---|---|---|
| 10 | 98-7531 | 2 | Hook-Engine |
| 20 | 100-9195 | 2 | Bolt |
| 30 | 130-1544 | 1 | Cylinder Head ASM |
| 40 | 105-3705 | 1 | Cap-Sealing |
| 50 | 98-9687 | 2 | Plug |
| 60 | 107-9066 | 3 | Guide-Valve, Inlet |
| 70 | 107-9067 | 3 | Guide-Valve, Exhaust |
| 80 | 98-9389 | 2 | Cap-Sealing |
| 90 | 98-9479 | 14 | Bolt-Head, Cylinder |
| 100 | 108-6573 | 1 | Gasket-Head, Cylinder |
| 110 | 98-9444 | 1 | Plug |

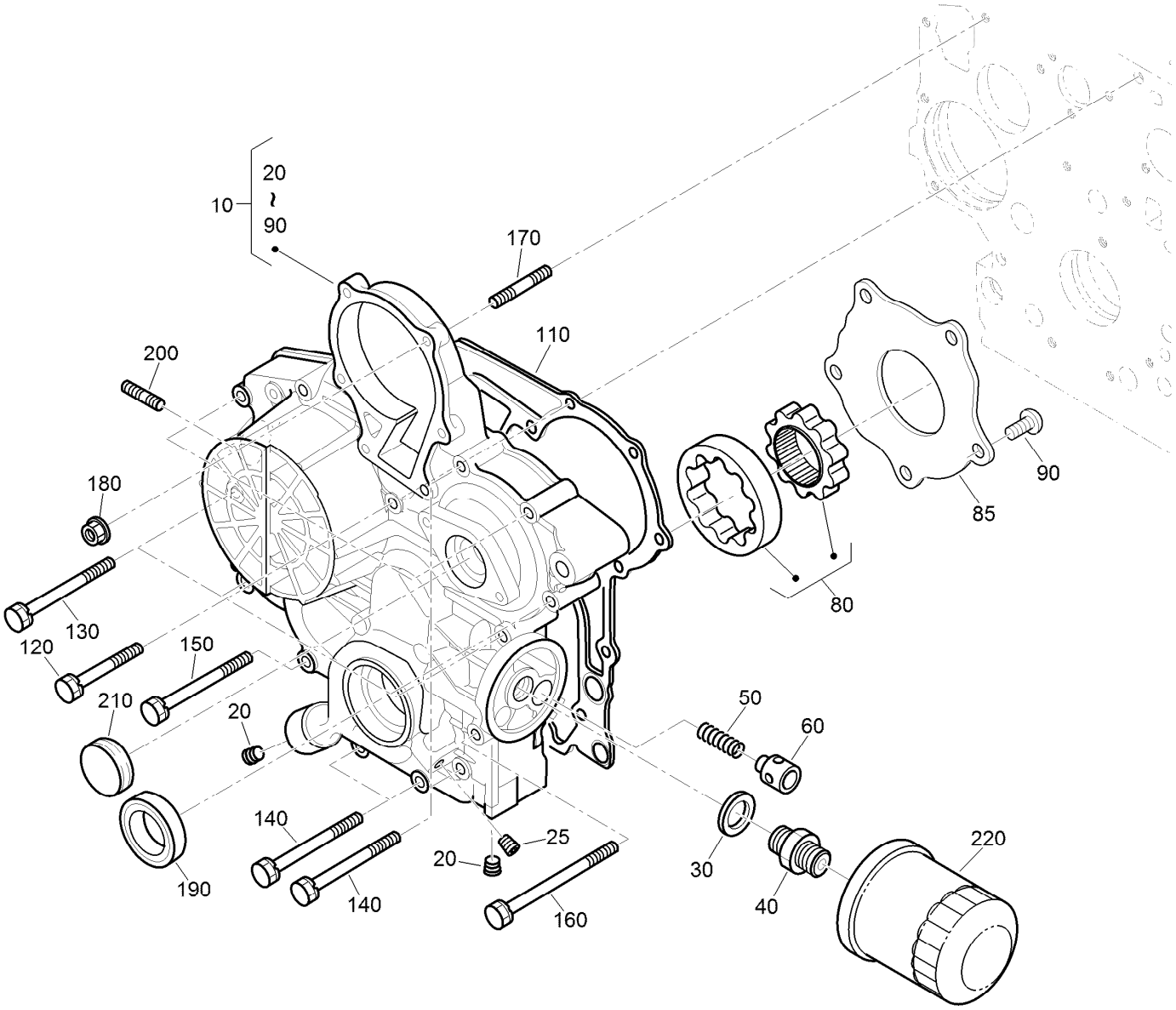


# Gear Case and Oil Filter Cartridge Assembly

| Ref. | Part Number | Qty. | Description |
|---|---|---|---|
| 10 | 115-4105 | 1 | Gear Case ASM |
| 20 | 127-0425 | 2 | Plug |
| 25 | 98-7487 | 1 | Plug |
| 30 | 98-7562 | 1 | Washer-Plain |
| 40 | 98-9388 | 1 | Joint-Pipe |
| 50 | 130-1511 | 1 | Spring |
| 60 | 130-1510 | 1 | Valve-Relief |
| 80 | 130-1508 | 1 | Rotor ASM |
| 85 | 130-1509 | 1 | Cover-Pump, Oil |
| 90 | 130-1164 | 5 | Screw-Binding |
| 110 | 98-9633 | 1 | Gasket-Case, Gear |

| Ref. | Part Number | Qty. | Description |
|---|---|---|---|
| 120 | 100-1765 | 3 | Bolt |
| 130 | 125-9063 | 4 | Bolt-Sems |
| 140 | 98-9356 | 4 | Bolt |
| 150 | 107-9074 | 1 | Bolt |
| 160 | 98-9586 | 1 | Bolt |
| 170 | 105-3709 | 1 | Stud |
| 180 | 100-2203 | 1 | Nut-Flange |
| 190 | 119-8038 | 1 | Seal-Oil |
| 200 | 105-3710 | 2 | Stud |
| 210 | 99-3515 | 1 | Plug-Gearcase |
| 220 | 127-0511 | 1 | Filter-Oil |

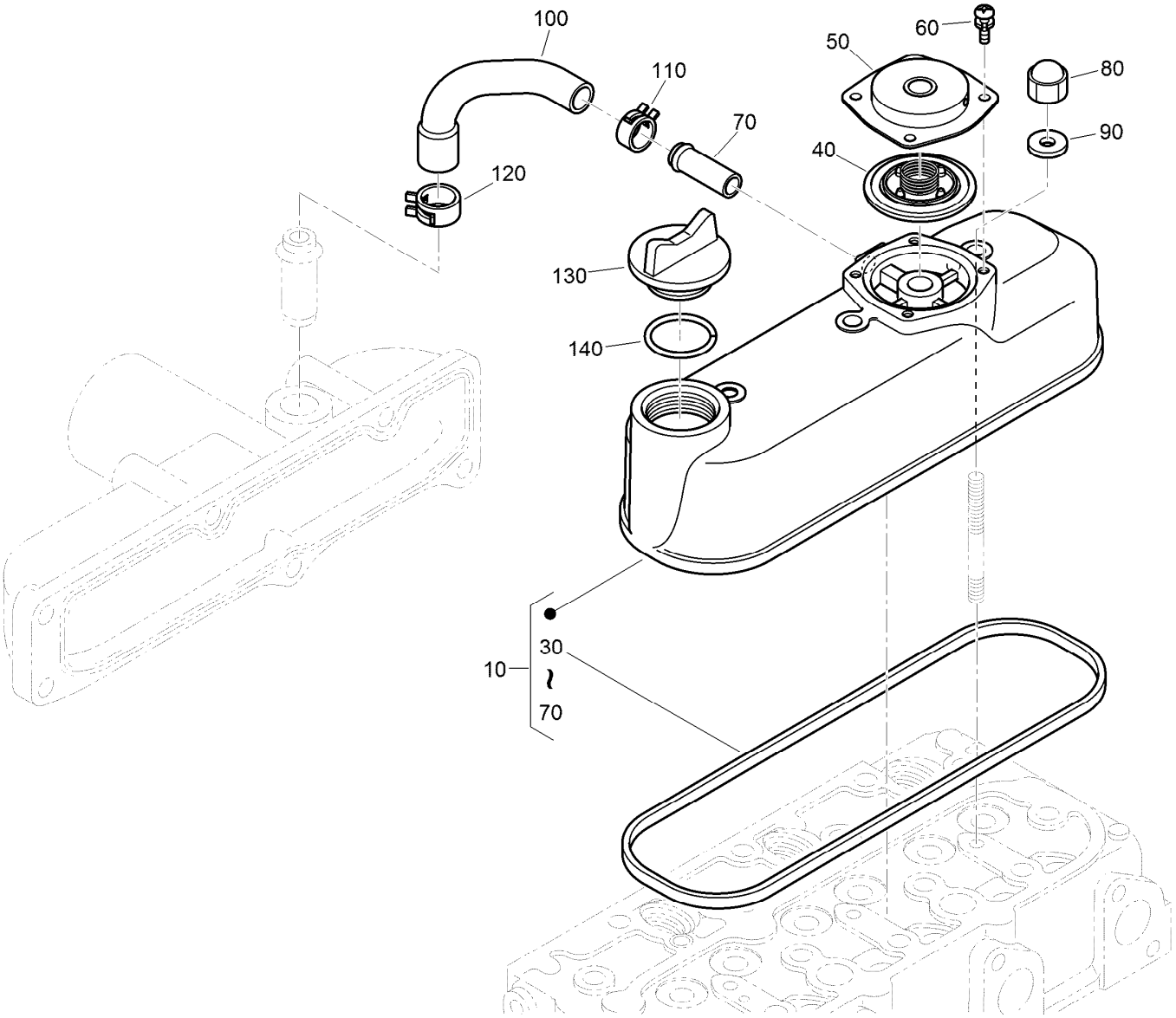


# Cylinder Head Cover Assembly

| *Ref.* | *Part Number* | *Qty.* | *Description* |
|---|---|---|---|
| 10 | 130-1372 | 1 | Cylinder Head Cover ASM |
| 30 | 98-9615 | 1 | Gasket-Cover, Head |
| 40 | 110-3715 | 1 | Valve-Breather |
| 50 | 110-3714 | 1 | Cover-Breather |
| 60 | 98-9364 | 4 | Screw (With Washer) |
| 70 | 98-7766 | 1 | Pipe-Return, Water |
| 80 | 98-9455 | 3 | Nut-Cap |
| 90 | 98-9454 | 3 | Gasket |
| 100 | 108-2858 | 1 | Tube-Breather |
| 110 | 108-2859 | 1 | Clamp-Hose |
| 120 | 108-2860 | 1 | Clamp-Hose |
| 130 | 107-9075 | 1 | Plug-Filler, Oil |
| 140 | 99-3446 | 1 | O-Ring |

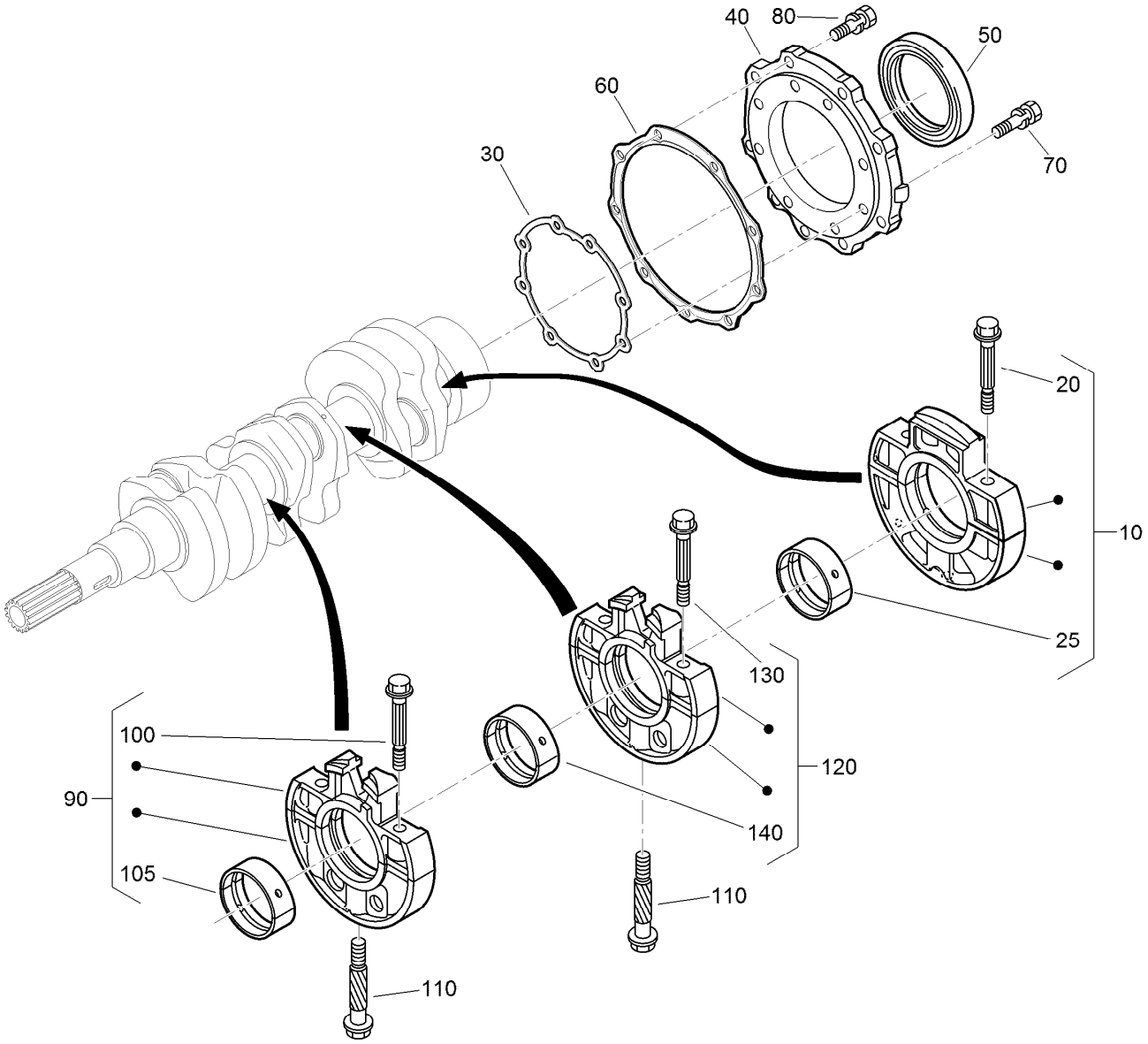


# Main Bearing Case Assembly

| Ref. | Part Number | Qty. | Description |
|---|---|---|---|
| 10 | 112-7026 | 1 | Wheel Bearing Case ASM |
| 20 | 98-9484 | 2 | Bolt-Case, Bearing |
| 25 | 115-4121 | 1 | Metal-Crankshaft (STD) |
| 25 | 112-7039 | 1 | Metal-Crankshaft (0.2Mm) |
| 25 | 112-7040 | 1 | Metal-Crankshaft (-0.4Mm) |
| 30 | 131-6554 | 1 | Gasket-Case, Bearing |
| 40 | 112-7046 | 1 | Cover-Case, Bearing |
| 50 | 112-0180 | 1 | Seal-Oil |
| 60 | 112-7037 | 1 | Gasket-Cover, Case |
| 70 | 127-0441 | 8 | Bolt |
| 80 | 127-0442 | 9 | Bolt |

| Ref. | Part Number | Qty. | Description |
|---|---|---|---|
| 90 | 115-4106 | 1 | Main Bearing Case ASM |
| 100 | 98-9484 | 2 | Bolt-Case, Bearing |
| 105 | 98-9524 | 1 | Metal-Crankshaft (STD Set) |
| 105 | 127-0433 | 1 | Metal-Crankshaft (-0.2MM) |
| 110 | 98-9531 | 1 | Bearing-Main (0.4MM) |
| 110 | 98-9485 | 2 | Bolt-Case, Bearing |
| 120 | 115-4107 | 1 | Main Bearing Case ASM |
| 130 | 98-9484 | 2 | Bolt-Case, Bearing |
| 140 | 98-9524 | 1 | Metal-Crankshaft (STD Set) |
| 140 | 127-0433 | 1 | Metal-Crankshaft (-0.2MM) |
| 140 | 98-9531 | 1 | Bearing-Main (0.4MM) |

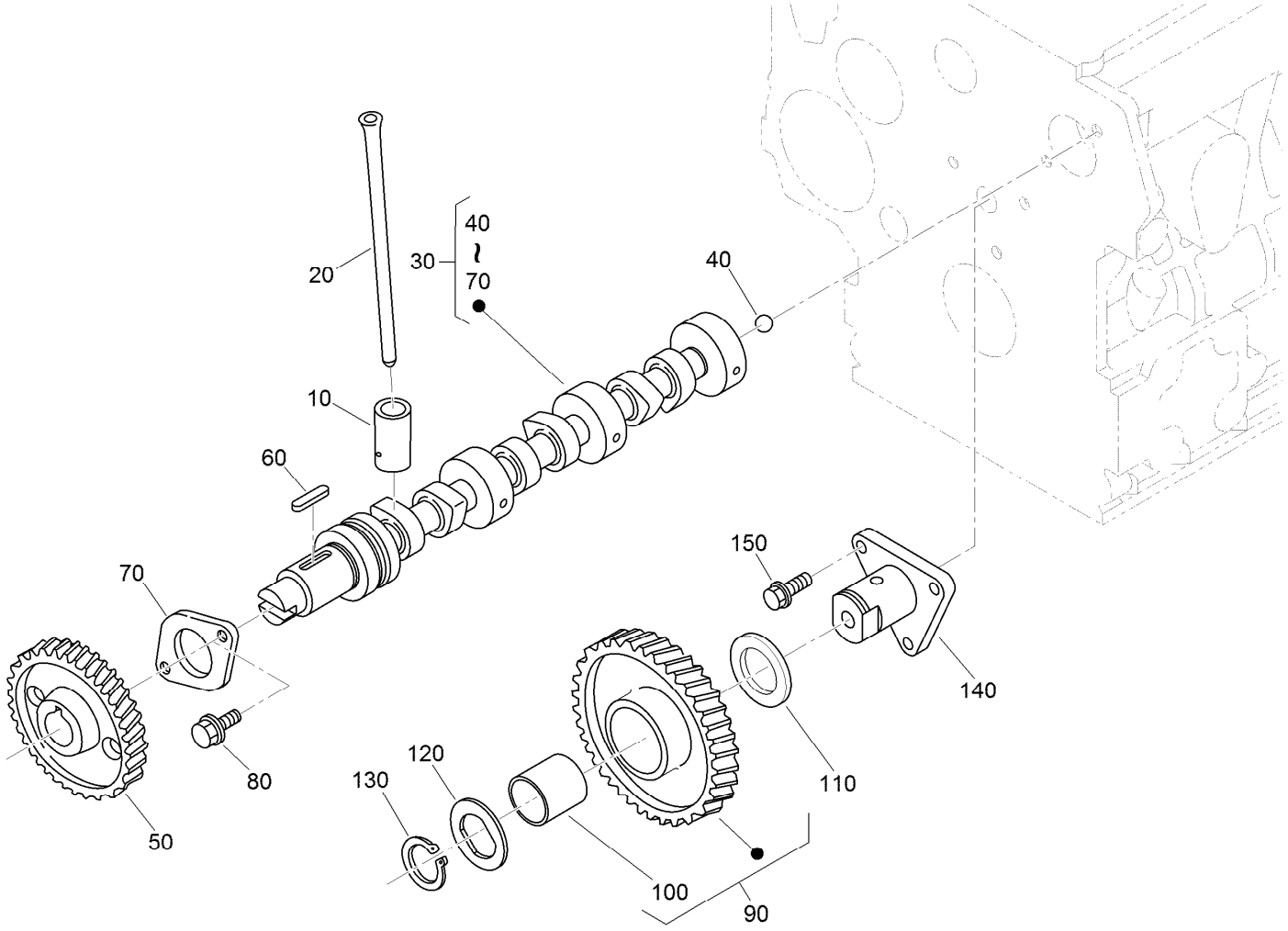


# Camshaft and Idle Gear Shaft Assembly

| *Ref.* | *Part Number* | *Qty.* | *Description* |
|---|---|---|---|
| 10 | 112-0185 | 6 | Tappet |
| 20 | 127-0421 | 6 | Rod-Push |
| 30 | 130-1545 | 1 | Camshaft ASM |
| 40 | 110-3729 | 1 | Ball |
| 50 | 120-3116 | 1 | Camshaft ASM |
| 60 | 98-9378 | 1 | Key-Feather |
| 70 | 131-6555 | 1 | Stopper (Camshaft) |
| 80 | 98-7692 | 2 | Bolt |
| 90 | 117-7584 | 1 | Idler Gear ASM |
| 100 | 117-7585 | 1 | Bushing-Gear, Idle |
| 110 | 98-9535 | 1 | Collar-Gear, Idle |
| 120 | 98-9536 | 1 | Collar-Gear, Idle |
| 130 | 98-9534 | 1 | Circlip-Gear, Idle |
| 140 | 98-9533 | 1 | Shaft-Gear, Idle |
| 150 | 98-7692 | 3 | Bolt |

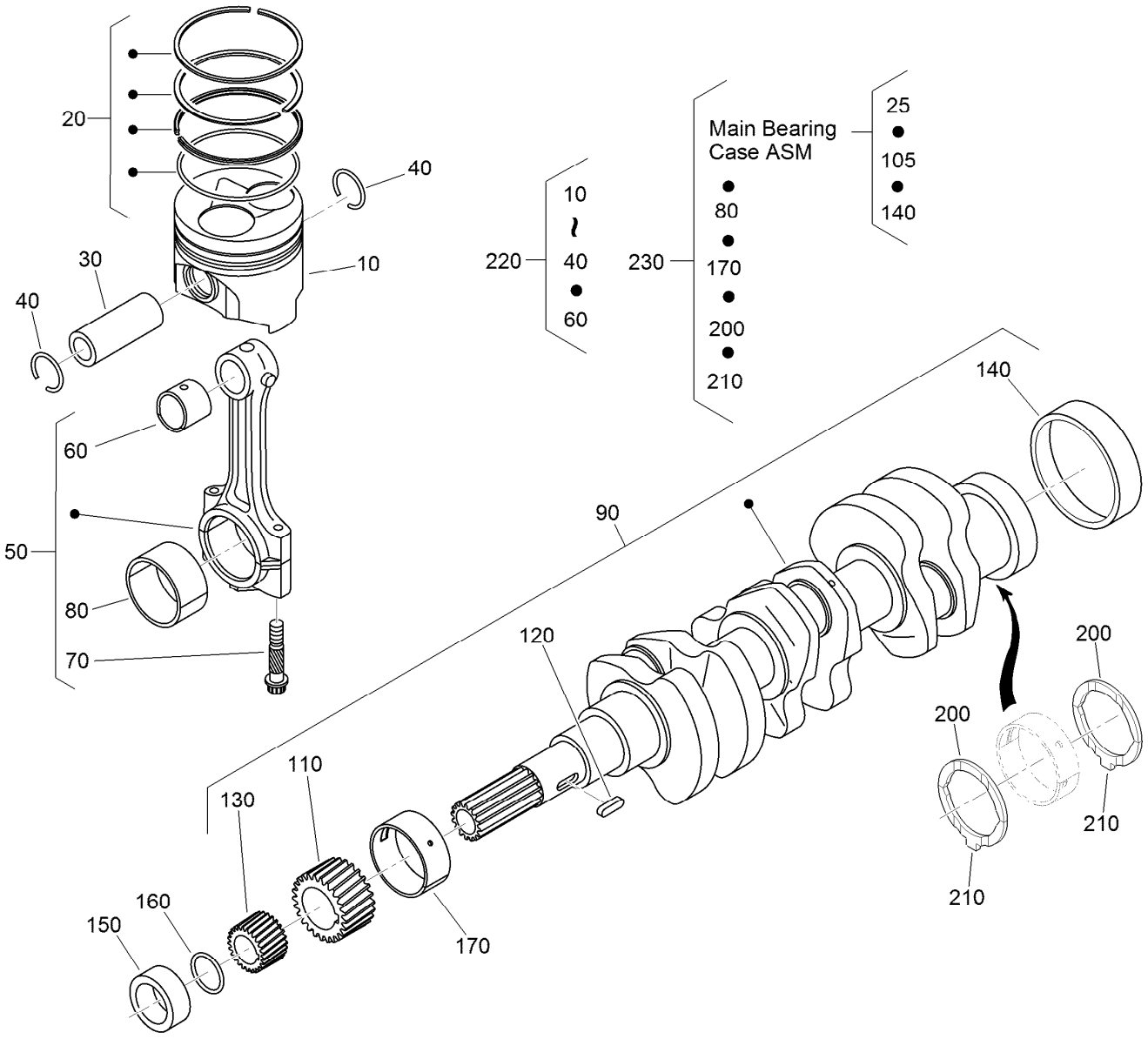


# Piston and Crankshaft Assembly

| Ref. | Part Number | Qty. | Description |
|---|---|---|---|
| 10 | 130-1546 | 3 | Piston (STD) |
| 10 | 130-1549 | 3 | Piston (+0.50MM) |
| 20 | 130-1506 | 3 | Piston Ring ASM (STD) |
| 20 | 130-1507 | 3 | Piston Ring ASM (+0.50MM) |
| 30 | 98-9513 | 3 | Pin-Piston |
| 40 | 98-9514 | 6 | Circlip-Pin, Piston |
| 50 | 117-7586 | 3 | Connecting Rod ASM |
| 60 | 115-3014 | 3 | Bushing-Pin, Piston |
| 70 | 98-9517 | 6 | Bolt-Rod, Connecting |
| 80 | 98-9553 | 3 | Bearing-Rod (STD) |
| 80 | 98-9519 | 3 | Bearing-Rod (-0.2MM) |
| 80 | 117-7588 | 3 | Metal-Crankpin (-0.4MM) |
| 90 | 130-1375 | 1 | Crankshaft ASM |
| 110 | 117-7561 | 1 | Gear-Crankshaft |
| 120 | 98-9666 | 1 | Key |
| 130 | 127-0445 | 1 | Gear-Drive, Oil Pump |
| 140 | 98-9522 | 1 | Sleeve-Crankshaft |
| 150 | 127-0444 | 1 | Collar-Crankshaft |

| Ref. | Part Number | Qty. | Description |
|---|---|---|---|
| 160 | 105-3783 | 1 | O-Ring |
| 170 | 112-7005 | 1 | Bearing-Main (STD) |
| 170 | 98-9528 | 1 | Bearing-Main (-0.2MM) |
| 170 | 130-1274 | 1 | Metal-Crankshaft (-0.40Mm) |
| 200 | 98-9413 | 2 | Bearing-Thrust (STD) |
| 200 | 127-0416 | 2 | Metal-Side (+0.2Mm) |
| 200 | 127-0417 | 2 | Metal-Side (+0.40Mm) |
| 210 | 98-9688 | 2 | Bearing-Thrust (STD) |
| 210 | 127-0437 | 2 | Metal-Side (+0.2MM) |
| 210 | 127-0438 | 2 | Metal-Side (+0.40MM) |
| 220 | 130-1547 | 3 | Piston Kit |
| 220 | 130-1548 | 3 | Piston Kit |
| 230 | 130-1501 | 1 | Engine Metal Kit (STD) |
| 230 | 130-1498 | 1 | Engine Metal Kit (-0.20Mm/+0.20Mm) |
| 230 | 130-1499 | 1 | Engine Metal Kit (-0.40Mm/+0.40Mm) |

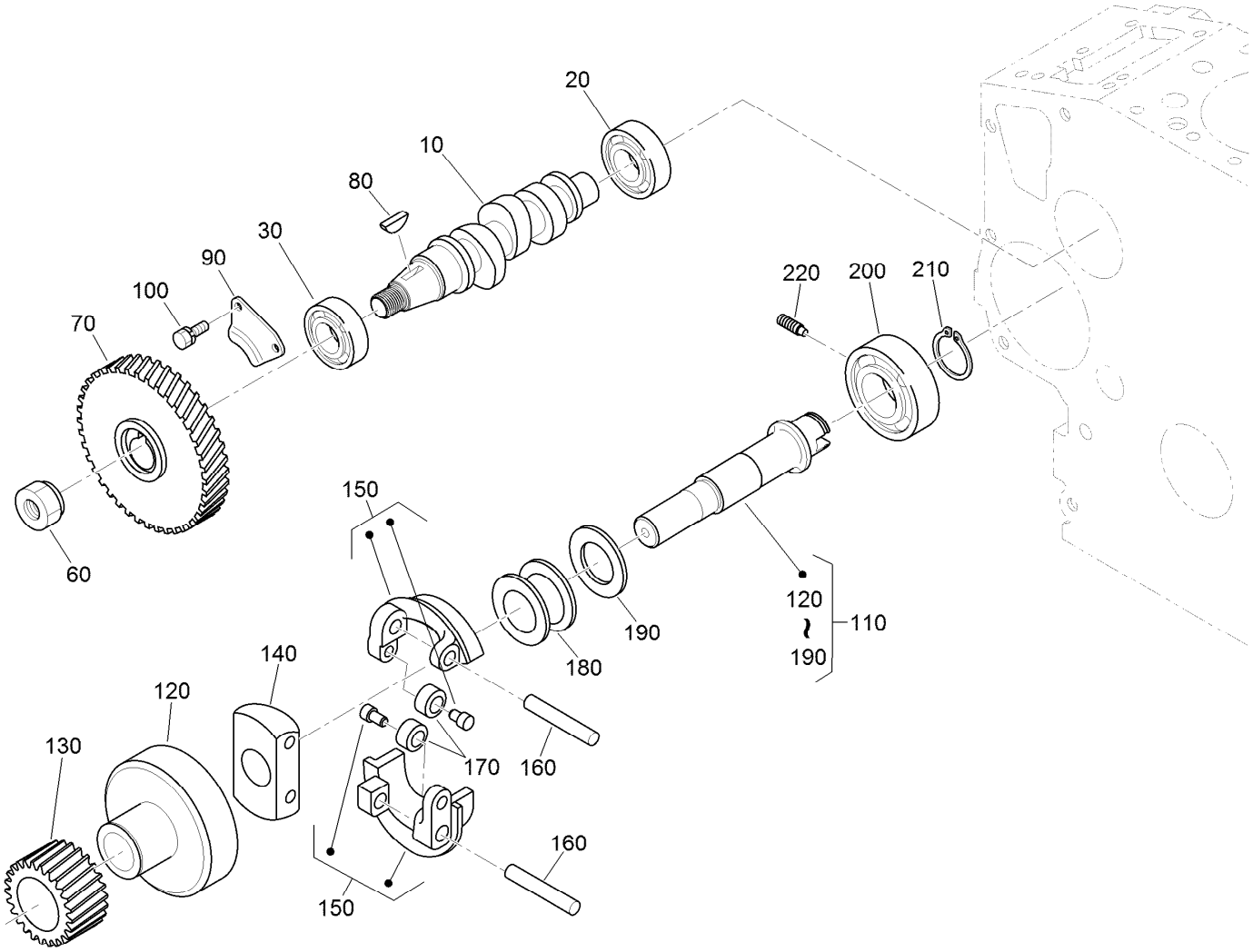


# Fuel Camshaft and Governor Shaft Assembly

| Ref. | Part Number | Qty. | Description |
|---|---|---|---|
| 10 | 98-9459 | 1 | Camshaft-Fuel |
| 20 | 107-9077 | 1 | Bearing-Ball |
| 30 | 107-9078 | 1 | Bearing-Ball |
| 60 | 130-1512 | 1 | Nut |
| 70 | 120-2562 | 1 | Gear-Pump, Injection |
| 80 | 98-9595 | 1 | Key-Woodruff |
| 90 | 98-9511 | 1 | Stopper-Fuel, Camshaft |
| 100 | 98-7692 | 2 | Bolt |
| 110 | 130-1255 | 1 | Governor Shaft ASM |
| 120 | 98-9562 | 1 | Holder-Gear, Governor |

| Ref. | Part Number | Qty. | Description |
|---|---|---|---|
| 130 | 98-9673 | 1 | Gear-Governor |
| 140 | 98-9561 | 1 | Holder-Weight, Governor |
| 150 | 98-9559 | 2 | Governor Weight ASM |
| 160 | 98-9560 | 2 | Shaft-Weight, Governor |
| 170 | 98-9692 | 2 | Roller |
| 180 | 98-9563 | 1 | Sleeve-Governor |
| 190 | 98-9564 | 1 | Washer-Thrust |
| 200 | 107-9079 | 1 | Bearing-Ball |
| 210 | 98-9657 | 1 | Circlip-Shaft, Governor |
| 220 | 98-9565 | 1 | Screw-Set |

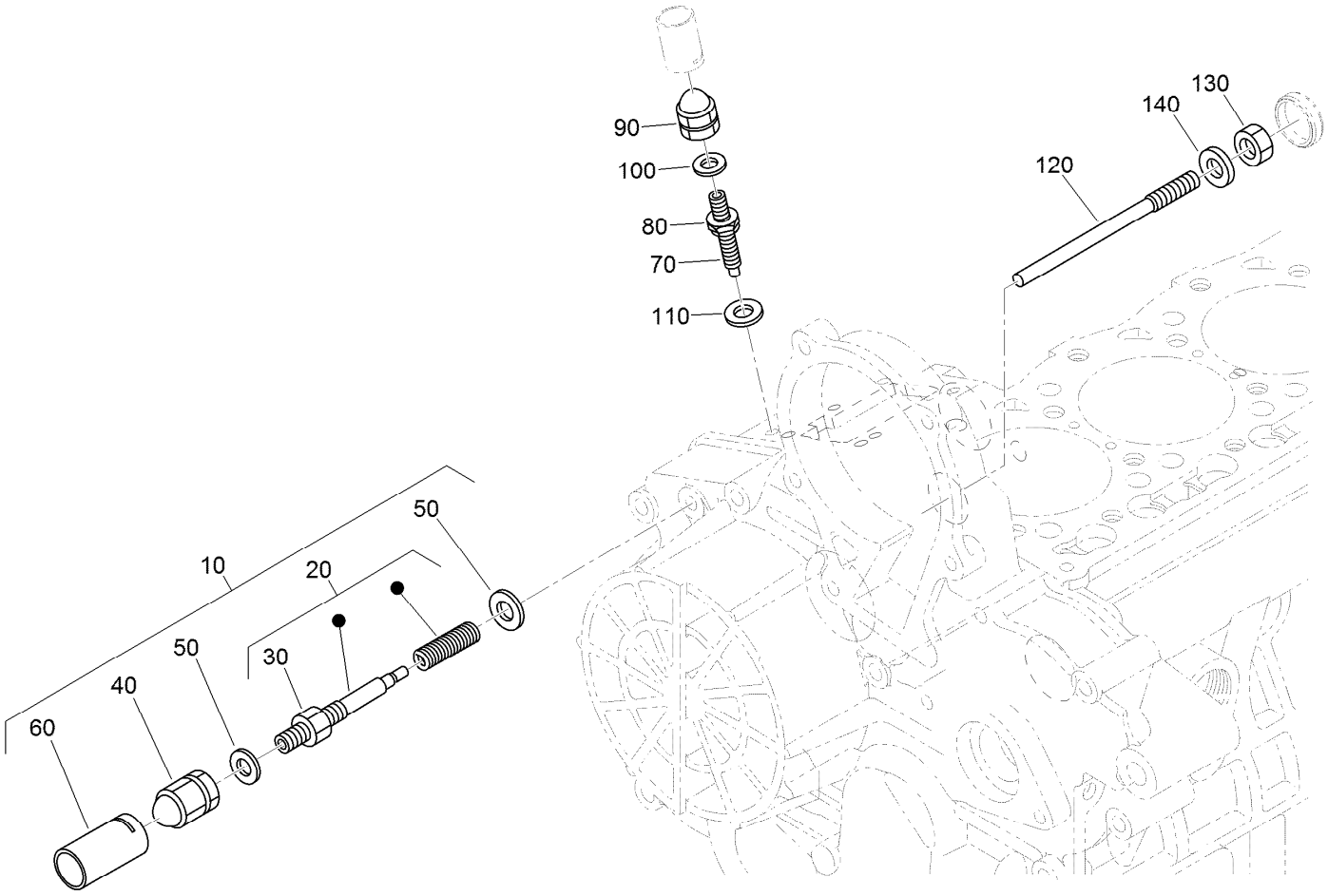


# Idle Apparatus Assembly

| *Ref.* | *Part Number* | *Qty.* | *Description* |
|---|---|---|---|
| 10 | 98-9678 | 1 | Idle Apparatus ASM |
| 20 | 112-7014 | 1 | Adjusting Bolt ASM |
| 30 | 98-9439 | 1 | Nut |
| 40 | 112-0181 | 1 | Nut |
| 50 | 98-7654 | 2 | Gasket |
| 60 | 98-7656 | 1 | Cap |
| 70 | 112-7015 | 1 | Bolt-Adjusting |
| 80 | 100-2175 | 1 | Nut-Lock |
| 90 | 112-0181 | 1 | Nut |
| 100 | 98-7654 | 1 | Gasket |
| 110 | 107-9081 | 1 | Gasket |
| 120 | 131-6556 | 1 | Bolt |
| 130 | 98-7572 | 1 | Nut |
| 140 | 98-7654 | 1 | Gasket |

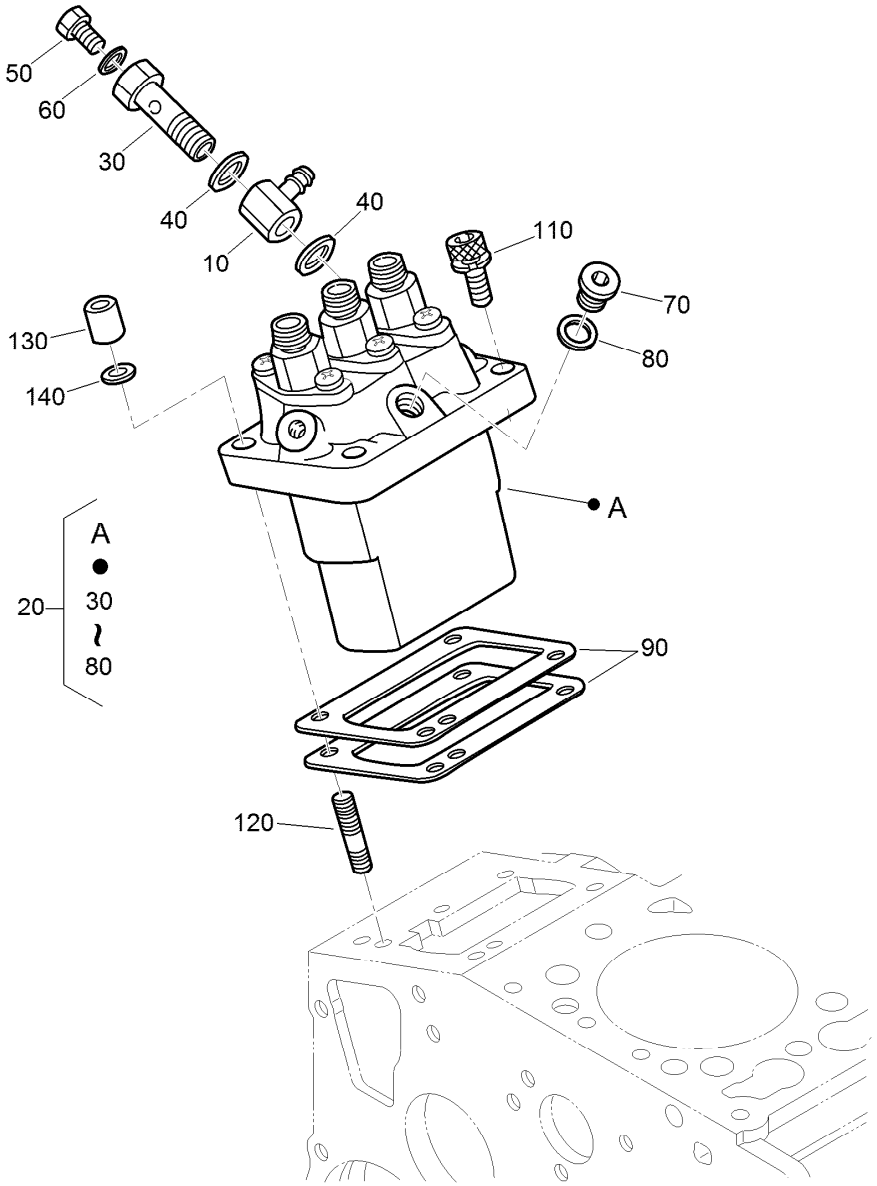


# Injection Pump Assembly

| Ref. | Part Number | Qty. | Description |
|---|---|---|---|
| 10 | 98-9596 | 1 | Joint-Eye |
| 20 | 98-9643 | 1 | Injection Pump ASM |
| 30 | 98-9464 | 1 | Bolt-Joint |
| 40 | 98-9445 | 2 | Gasket |
| 50 | 98-9430 | 1 | Screw |
| 60 | 98-9446 | 1 | Gasket |
| 70 | 98-9466 | 1 | Plug |
| 80 | 98-9451 | 1 | Gasket |
| 90 | 98-9456 | 1 | Shim-Injection (0.20MM) |

| Ref. | Part Number | Qty. | Description |
|---|---|---|---|
| 90 | 98-9457 | 1 | Shim-Injection (0.25MM) |
| 90 | 98-9458 | 1 | Shim-Injection (0.30MM) |
| 90 | 115-3046 | 1 | Shim-Injection (0.35MM) |
| 90 | 115-3045 | 1 | Shim-Injection (0.175MM) |
| 110 | 117-7564 | 2 | Bolt-Hex Soc HD |
| 120 | 98-9438 | 2 | Stud |
| 130 | 98-9440 | 2 | Nut-Cap |
| 140 | 98-7699 | 2 | Washer-Spring |

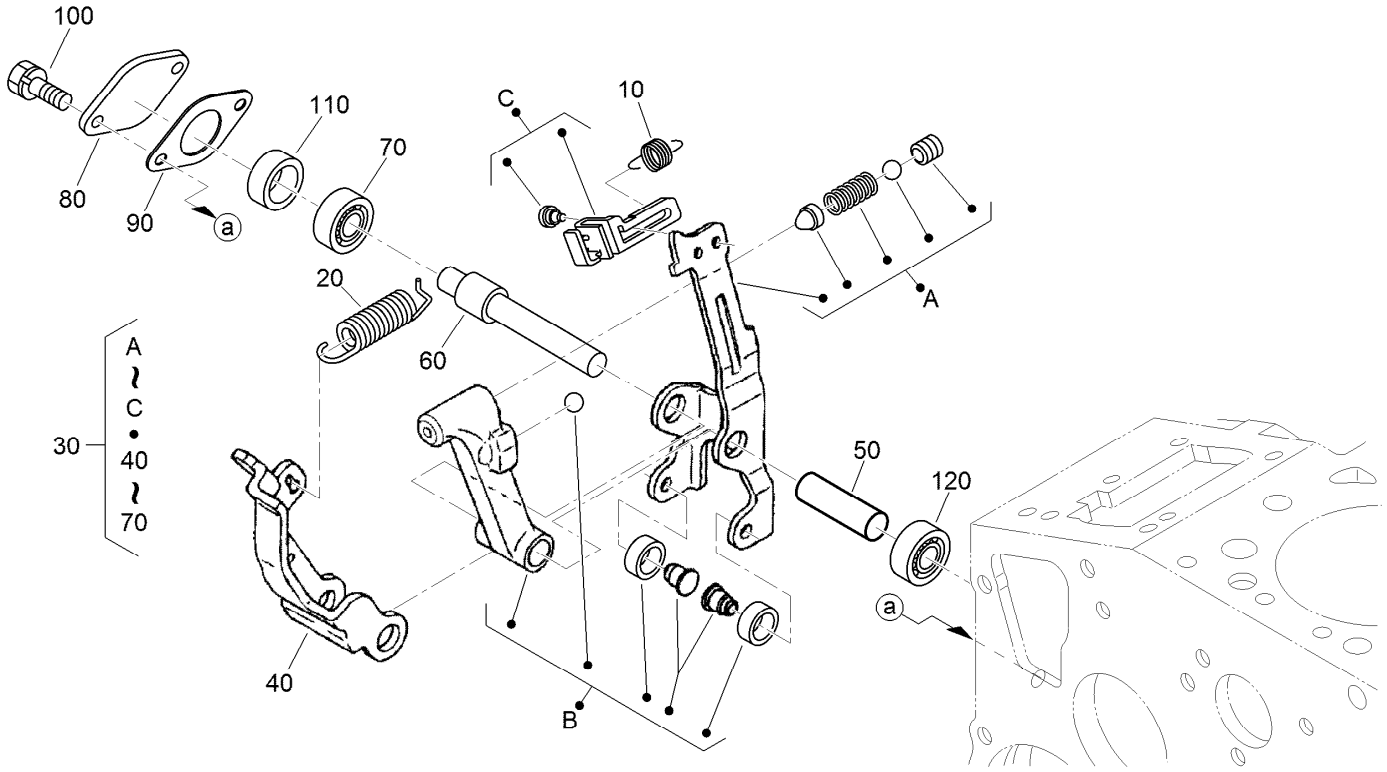


# Governor Assembly

| *Ref.* | *Part Number* | *Qty.* | *Description* |
|---|---|---|---|
| 10 | 105-3786 | 1 | Spring-Start |
| 20 | 98-9681 | 1 | Spring-Governor |
| 30 | 115-4502 | 1 | Fork Lever ASM |
| 40 | 107-9084 | 1 | Lever-Fork |
| 50 | 107-9085 | 1 | Shaft-Lever, Fork |
| 60 | 107-9086 | 1 | Shaft-Lever, Fork |
| 70 | 98-9570 | 1 | Bearing-Miniaturize |
| 80 | 115-4122 | 1 | Cover-Shaft, Fork Lever |
| 90 | 98-9682 | 1 | Gasket |
| 100 | 98-9350 | 2 | Bolt |
| 110 | 98-9567 | 1 | Collar |
| 120 | 98-9571 | 1 | Bearing-Miniaturize |

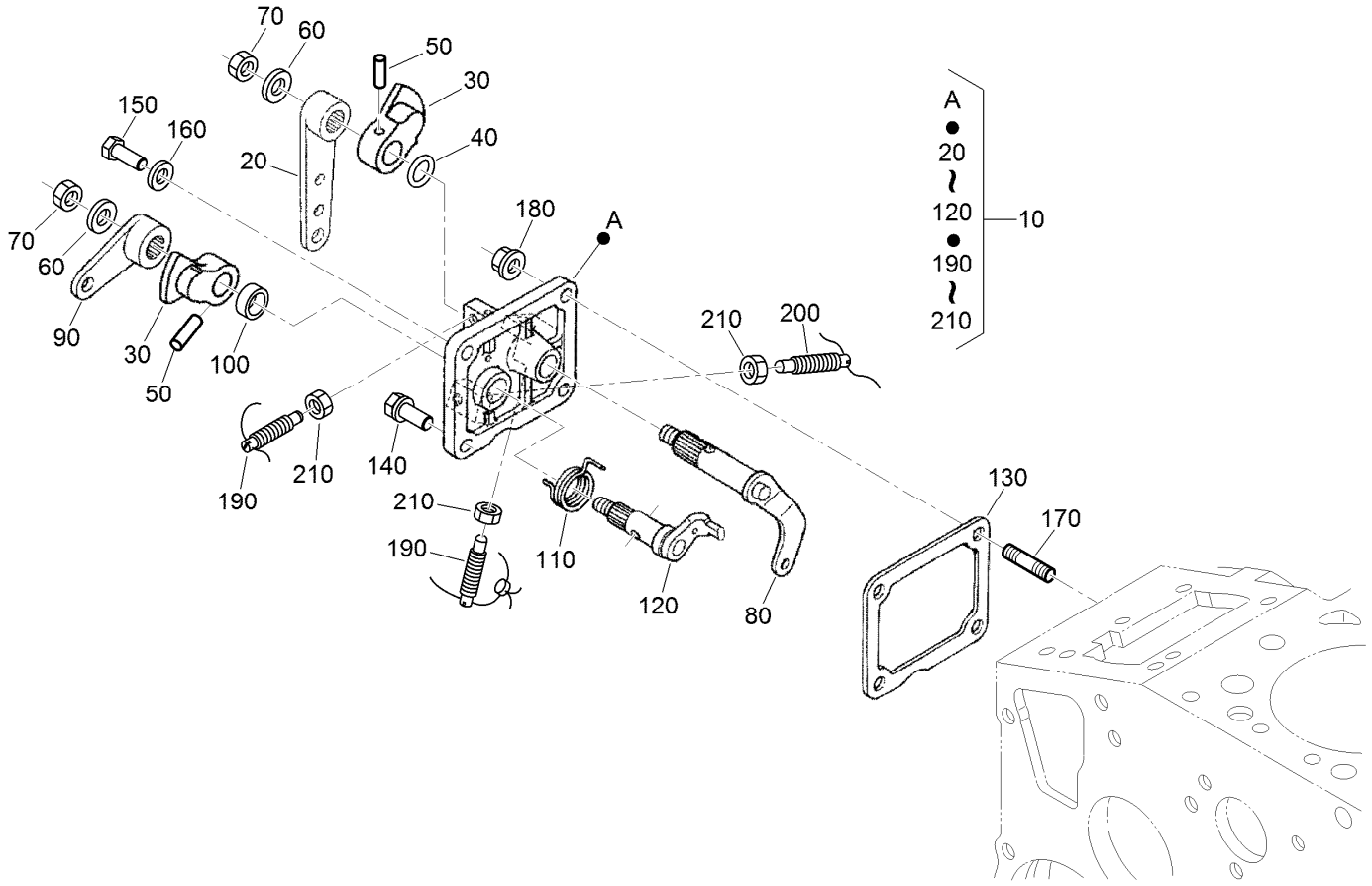


# Speed Control Plate Assembly

| Ref. | Part Number | Qty. | Description |
|---|---|---|---|
| 10 | 105-3735 | 1 | Control Plate ASM |
| 20 | 98-9662 | 1 | Lever-Control, Speed |
| 30 | 98-9572 | 2 | Lever-Control, Speed |
| 40 | 105-3788 | 1 | O-Ring |
| 50 | 98-7602 | 2 | Pin-Spring |
| 60 | 98-9594 | 2 | Washer-Plain |
| 70 | 98-9589 | 2 | Nut |
| 80 | 98-9658 | 1 | Governor Lever ASM |
| 90 | 98-9663 | 1 | Lever-Stop, Engine |
| 100 | 98-7601 | 1 | Seal-Oil |
| 110 | 98-9472 | 1 | Spring-Return |
| 120 | 98-9664 | 1 | Shaft-Lever, Stop |
| 130 | 98-9637 | 1 | Gasket |
| 140 | 98-7692 | 1 | Bolt |
| 150 | 127-0401 | 1 | Bolt-Hex |
| 160 | 98-7654 | 1 | Gasket |
| 170 | 105-3710 | 2 | Stud |
| 180 | 100-2203 | 2 | Nut-Flange |
| 190 | 117-7565 | 2 | Bolt-Adjusting |
| 200 | 117-7566 | 1 | Bolt-Adjusting |
| 210 | 98-7572 | 3 | Nut |

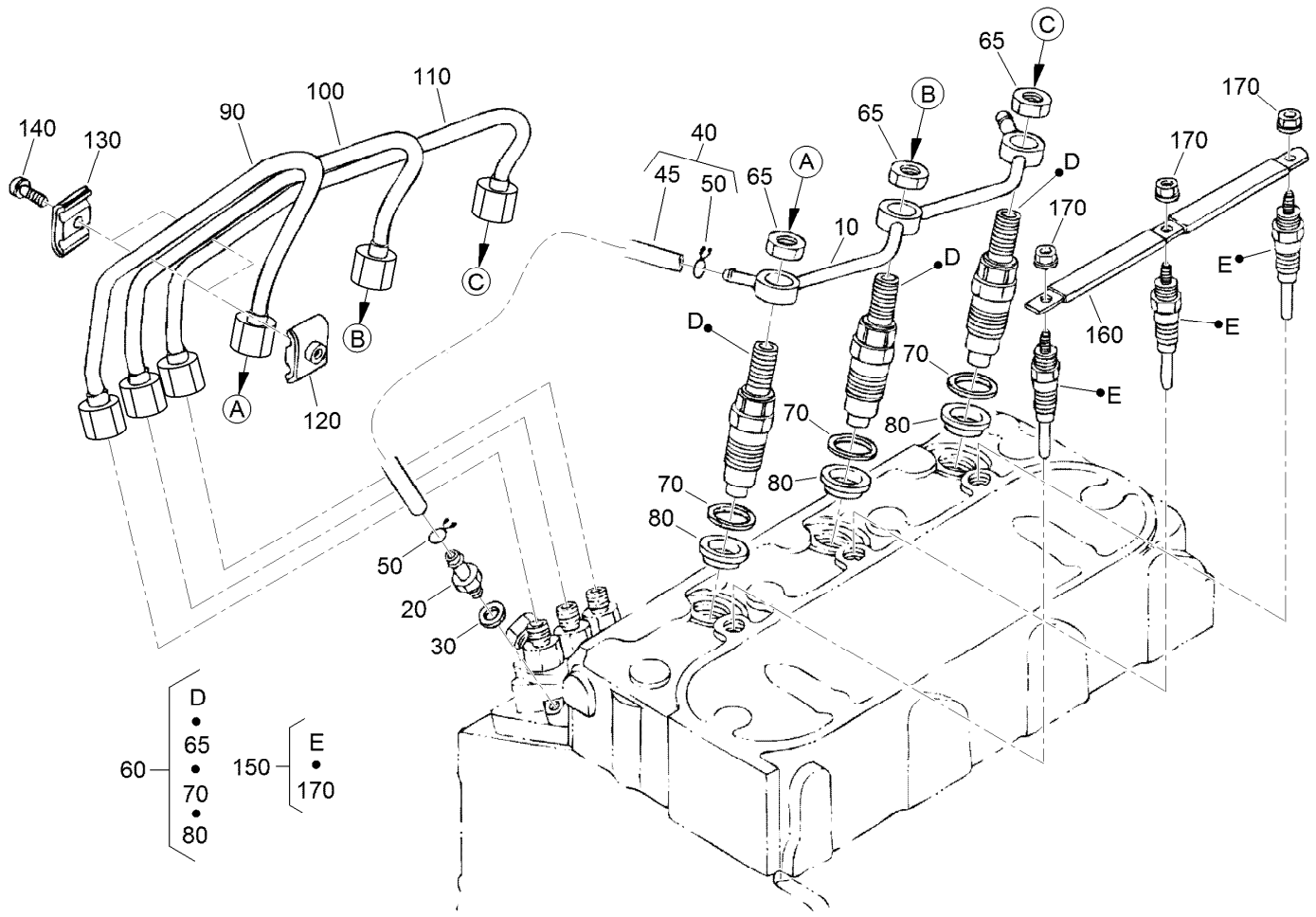


# Nozzle Holder and Glow Plug Assembly

| Ref. | Part Number | Qty. | Description |
|---|---|---|---|
| 10 | 98-9620 | 1 | Overflow Pipe ASM |
| 20 | 98-9431 | 1 | Screw-Bleeder, Air |
| 30 | 98-7654 | 1 | Gasket |
| 40 | 98-9420 | 1 | Overflow Pipe ASM |
| 45 | 112-0182 | 1 | Pipe-Overflow |
| 50 | 98-7671 | 2 | Clip-Pipe |
| 60 | 115-3018 | 3 | Nozzle Holder Kit |
| 65 | 121-2411 | 3 | Nut |
| 70 | 98-7676 | 3 | Gasket |
| 80 | 98-7677 | 3 | Seal-Heat |

| Ref. | Part Number | Qty. | Description |
|---|---|---|---|
| 90 | 98-9653 | 1 | Pipe-Injection |
| 100 | 98-9654 | 1 | Pipe-Injection |
| 110 | 98-9655 | 1 | Pipe-Injection |
| 120 | 98-7682 | 2 | Clamp-Pipe |
| 130 | 98-7683 | 2 | Clamp-Pipe |
| 140 | 98-7684 | 2 | Screw (W/Washer) |
| 150 | 130-1411 | 3 | Plug-Glow |
| 160 | 98-9631 | 1 | Cord-Plug, Glow |
| 170 | 99-8377 | 3 | Nut-Flange |

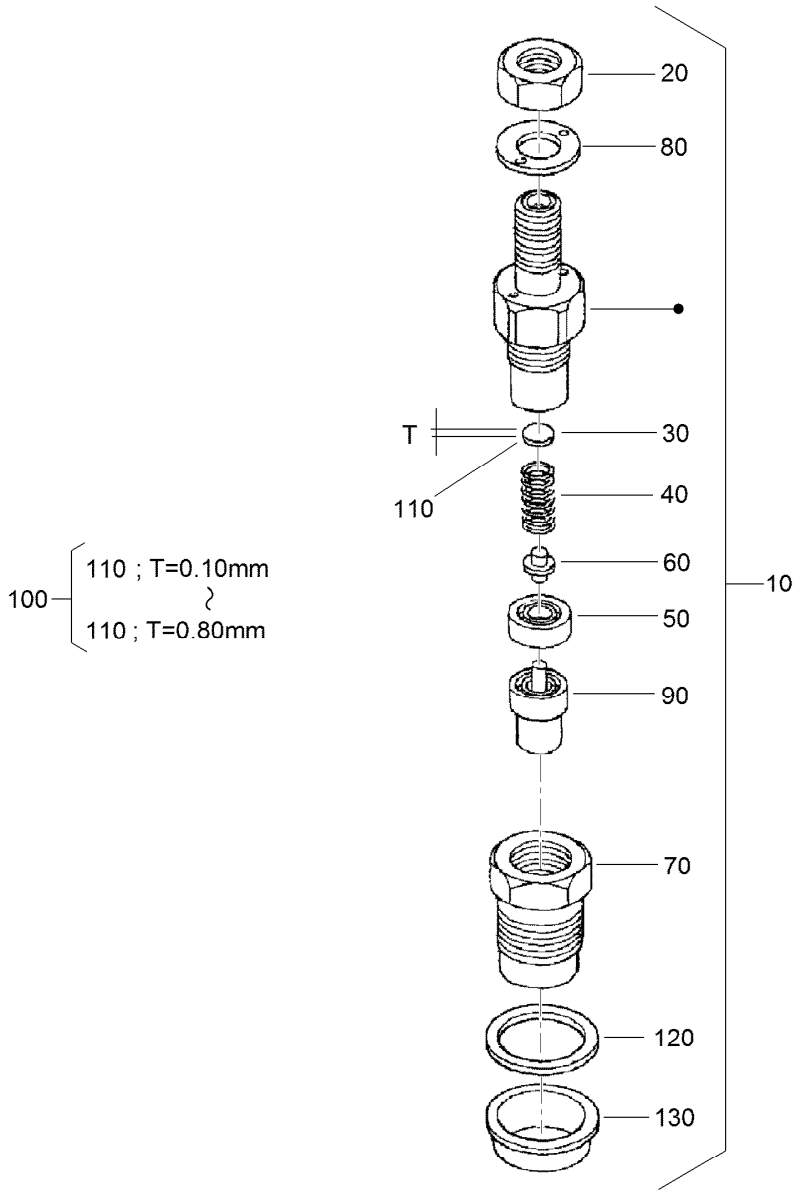


# Nozzle Holder Assembly

| Ref. | Part Number | Qty. | Description |
|---|---|---|---|
| 10 | 115-3018 | 3 | Nozzle Holder Kit |
| 20 | 121-2411 | 3 | Nut |
| 30 | 99-8302 | 3 | Washer-Adjusting |
| 40 | 99-8303 | 3 | Spring-Nozzle |
| 50 | 99-8304 | 3 | Spacer-Distance |
| 60 | 99-8305 | 3 | Rod-Push |
| 70 | 99-8306 | 3 | Nut-Nozzle |
| 80 | 99-8307 | 3 | Washer-Plain |
| 90 | 115-3020 | 3 | Piece-Nozzle |
| 100 | 99-8309 | 3 | Adjusting Washer ASM |
| 110 | 99-8310 | 3 | Washer-Adjust (0.10MM) |

| Ref. | Part Number | Qty. | Description |
|---|---|---|---|
| 110 | 99-8311 | 3 | Washer-Adjust (0.20MM) |
| 110 | 99-8312 | 3 | Washer-Adjust (0.30MM) |
| 110 | 99-8313 | 3 | Washer-Adjust (0.40MM) |
| 110 | 99-8314 | 3 | Washer-Adjust (0.50MM) |
| 110 | 99-8315 | 3 | Washer-Adjust (0.52MM) |
| 110 | 99-8316 | 3 | Washer-Adjust (0.54MM) |
| 110 | 99-8317 | 3 | Washer-Adjust (0.56MM) |
| 110 | 99-8318 | 3 | Washer-Adjust (0.58MM) |
| 110 | 99-8319 | 3 | Washer-Adjust (0.80MM) |
| 120 | 98-7676 | 3 | Gasket |
| 130 | 98-7677 | 3 | Seal-Heat |

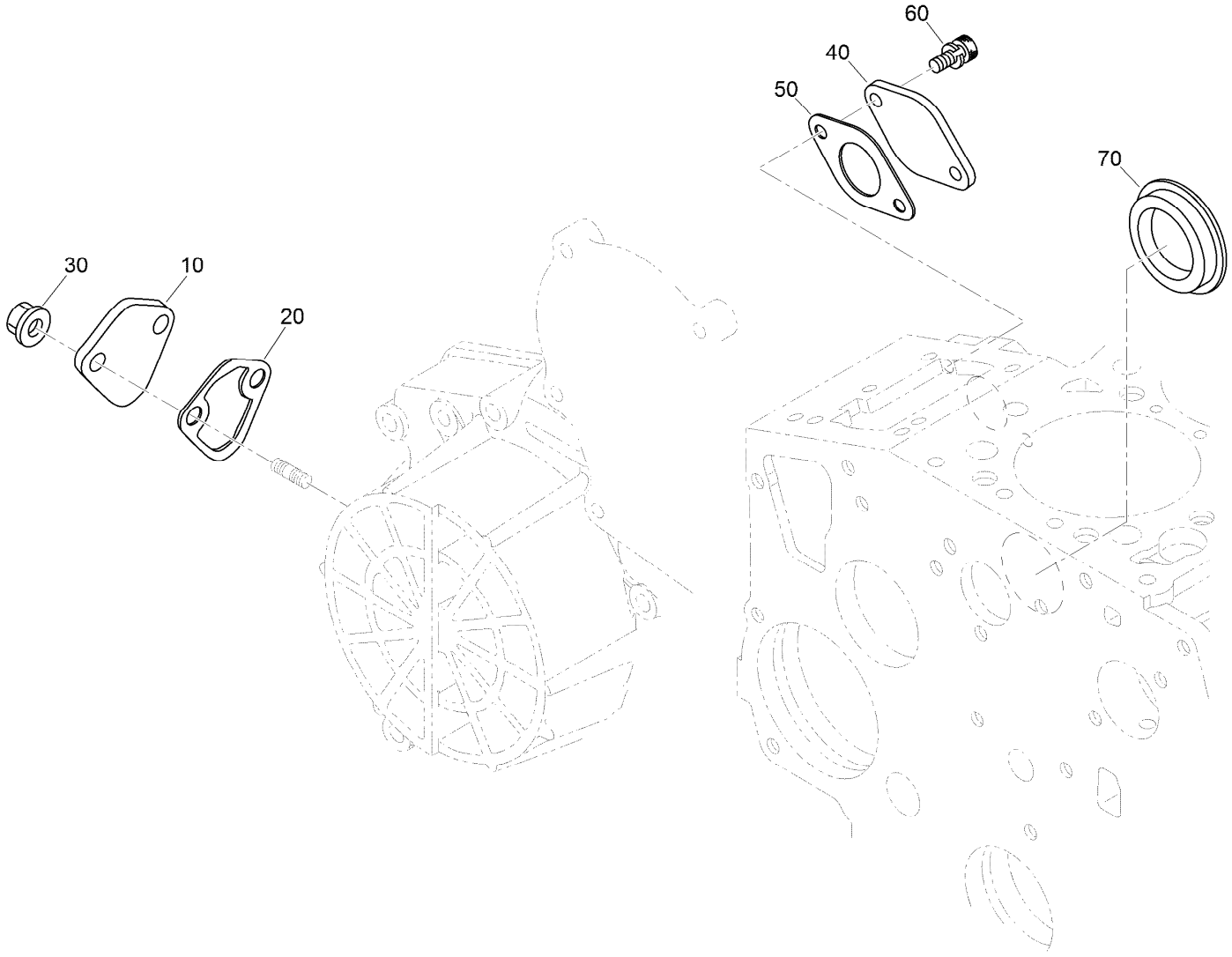


# Cover Assembly

| *Ref.* | *Part Number* | *Qty.* | *Description* |
|---|---|---|---|
| 10 | 99-3514 | 1 | Cover |
| 20 | 117-7562 | 1 | Gasket-Pump, Fuel |
| 30 | 100-2203 | 2 | Nut-Flange |
| 40 | 127-0419 | 1 | Cover-Solenoid |
| 50 | 98-9683 | 1 | Gasket-Cover, Solenoid |
| 60 | 130-1155 | 2 | Screw-HSH |
| 70 | 112-7016 | 1 | Cover-Pump |

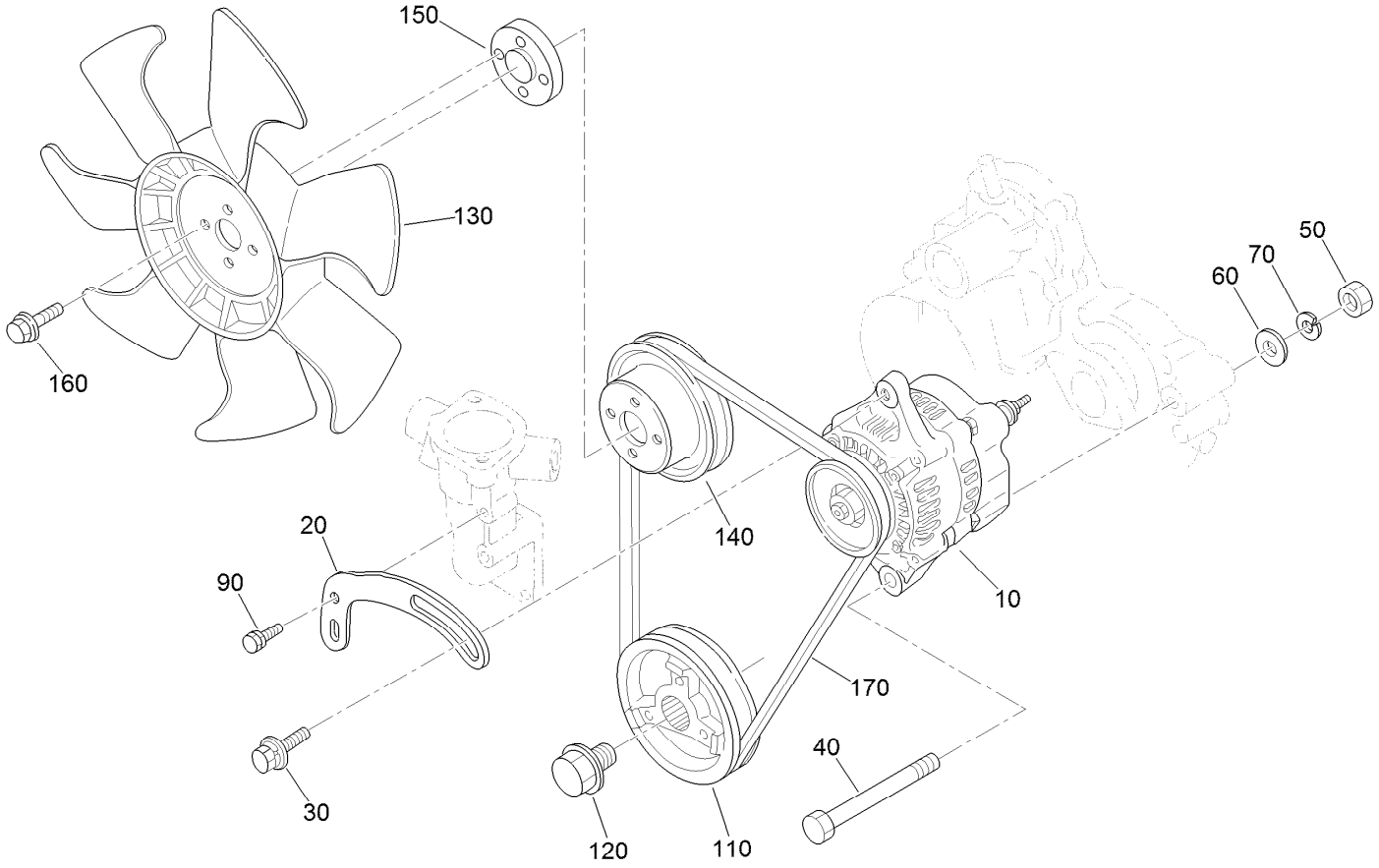


# Alternator, Pulley and Fan Assembly

| *Ref.* | *Part Number* | *Qty.* | *Description* |
|---|---|---|---|
| 10 | 131-6557 | 1 | Alternator ASM |
| 20 | 112-7047 | 1 | Stay-Dynamo |
| 30 | 108-7088 | 1 | Bolt |
| 40 | 98-9360 | 1 | Bolt |
| 50 | 98-7737 | 1 | Nut |
| 60 | 98-9366 | 1 | Washer-Plain |
| 70 | 98-7738 | 1 | Washer-Spring |
| 90 | 98-7692 | 1 | Bolt |
| 110 | 98-9473 | 1 | Pulley-Drive, Fan |
| 120 | 98-9585 | 1 | Bolt |
| 130 | 110-0966 | 1 | Fan-Cooling |
| 140 | 130-1567 | 1 | Pulley-Fan |
| 150 | 108-2872 | 1 | Collar-Fan |
| 160 | 108-2873 | 4 | Bolt-Flange |
| 170 | 104-3494 | 1 | Belt-V |

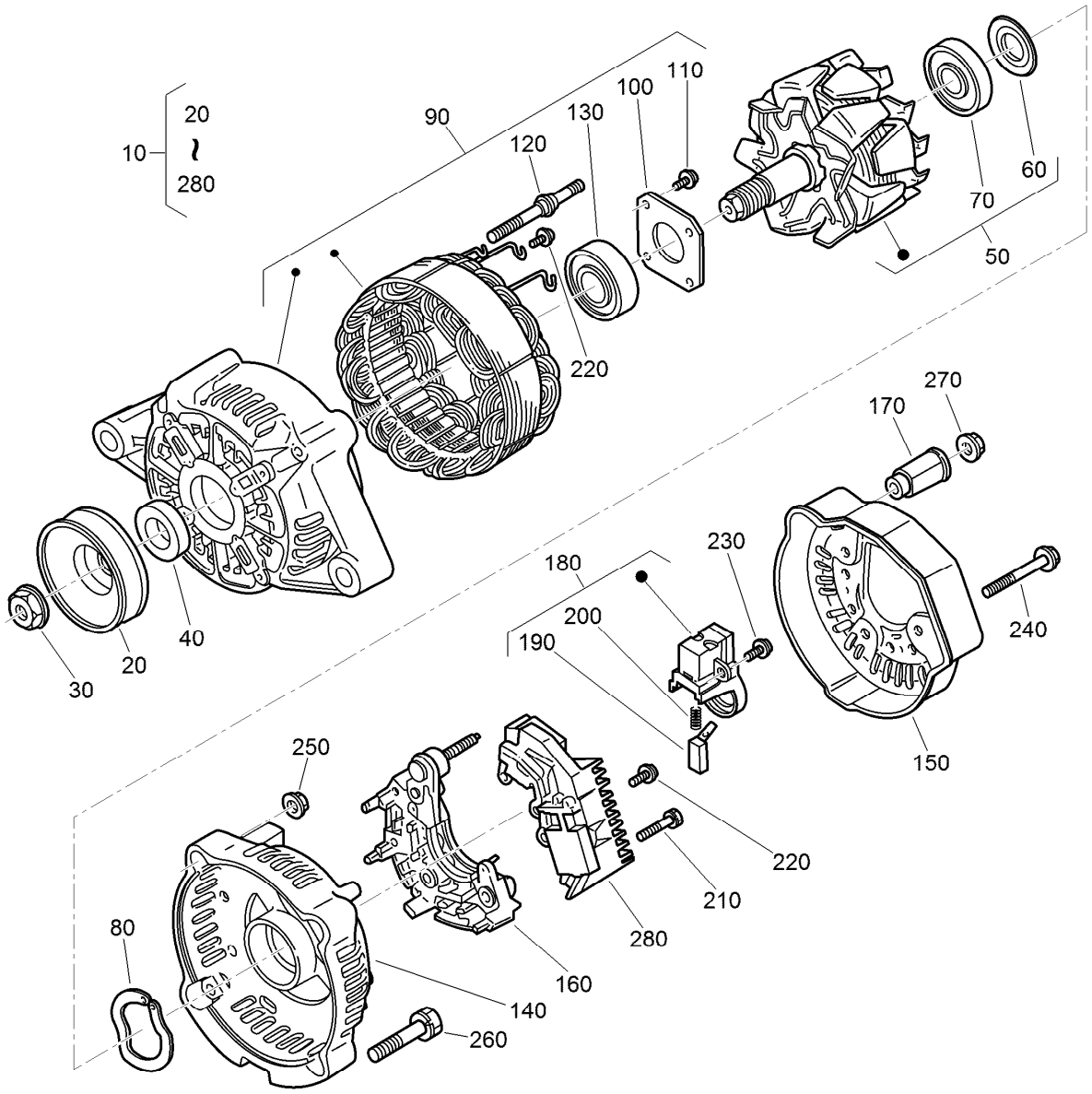


# Alternator Assembly No. 131-6557

| Ref. | Part Number | Qty. | Description |
|---|---|---|---|
| 10 | 131-6557 | 1 | Alternator ASM |
| 20 | 98-9453 | 1 | Pulley-Dynamo |
| 30 | 98-7708 | 1 | Nut |
| 40 | 98-7709 | 1 | Collar |
| 50 | 107-0136 | 1 | Rotor ASM |
| 60 | 98-7711 | 1 | Cover-Bearing |
| 70 | 107-0138 | 1 | Bearing-Ball |
| 80 | 98-7713 | 1 | Washer-Thrust |
| 90 | 131-6559 | 1 | Frame-End, Drive |
| 100 | 98-7715 | 1 | Plate-Retainer |
| 110 | 98-7716 | 4 | Screw-Head, Round |
| 120 | 98-7717 | 2 | Bolt-Through |
| 130 | 133-2811 | 1 | Bearing |
| 140 | 107-9087 | 1 | Frame-End |

| Ref. | Part Number | Qty. | Description |
|---|---|---|---|
| 150 | 107-0140 | 1 | Cover-End |
| 160 | 127-1612 | 1 | Rectifier ASM |
| 170 | 98-7722 | 1 | Bushing-Insulation |
| 180 | 107-0141 | 1 | Brush Holder ASM |
| 190 | 98-7724 | 2 | Brush |
| 200 | 98-7725 | 2 | Spring-Brush |
| 210 | 98-7726 | 2 | Screw-Head, Round |
| 220 | 98-7727 | 6 | Screw-Head, Round |
| 230 | 98-7728 | 1 | Screw-Head, Round |
| 240 | 98-7729 | 3 | Bolt |
| 250 | 98-7730 | 2 | Nut |
| 260 | 98-7731 | 2 | Bolt |
| 270 | 98-7732 | 1 | Nut |
| 280 | 110-3799 | 1 | Regulator ASM |

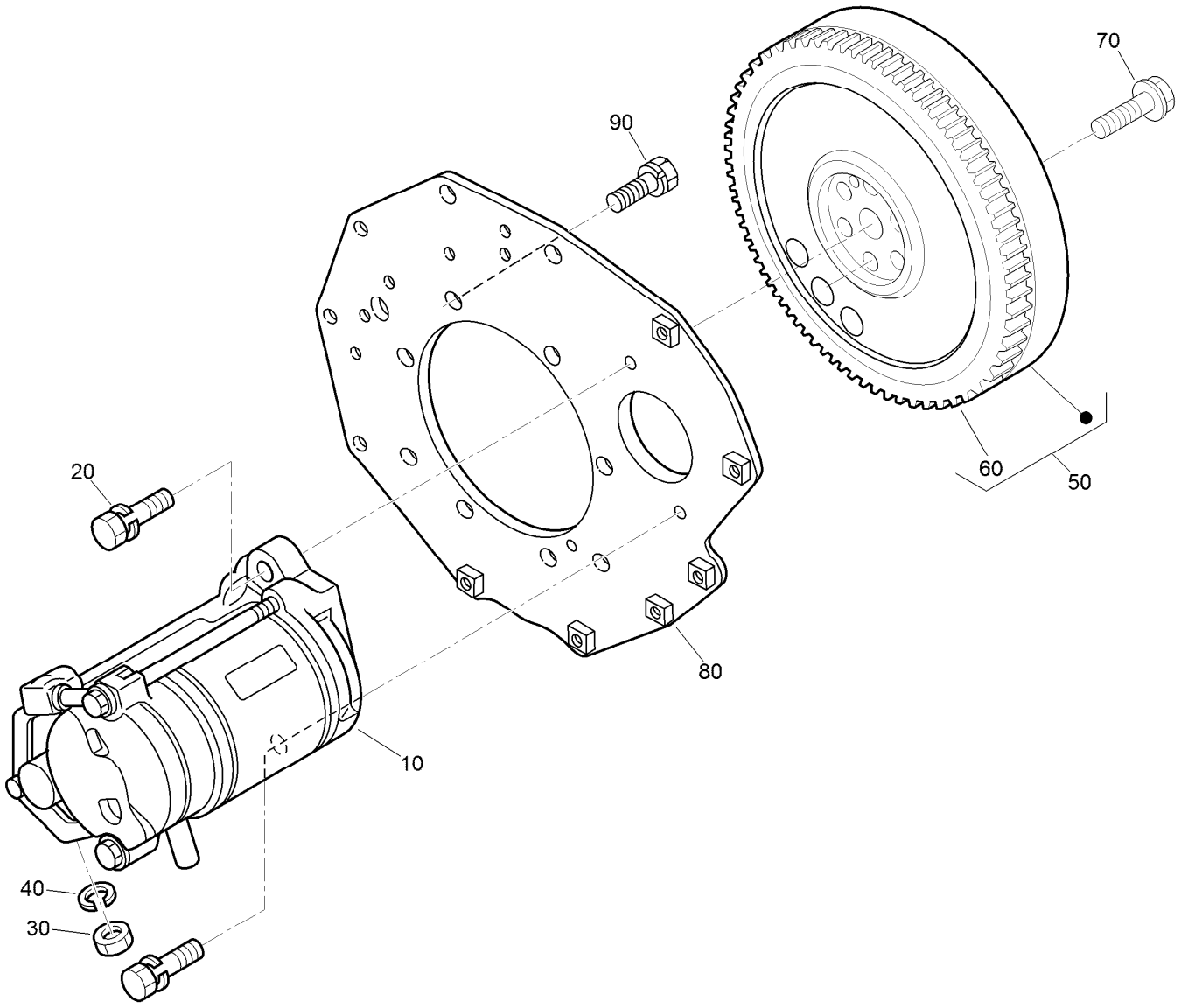


# Starter and Flywheel Assembly

| *Ref.* | *Part Number* | *Qty.* | *Description* |
|---|---|---|---|
| 10 | 131-6561 | 1 | Starter ASM |
| 20 | 98-7697 | 2 | Bolt |
| 30 | 98-7739 | 1 | Nut |
| 40 | 105-2893 | 1 | Washer-Spring |
| 50 | 105-3784 | 1 | Flywheel ASM |
| 60 | 115-3015 | 1 | Gear-Ring |
| 70 | 98-9537 | 6 | Bolt-Flywheel |
| 80 | 98-9486 | 1 | Plate-End, Rear |
| 90 | 98-9392 | 8 | Bolt |

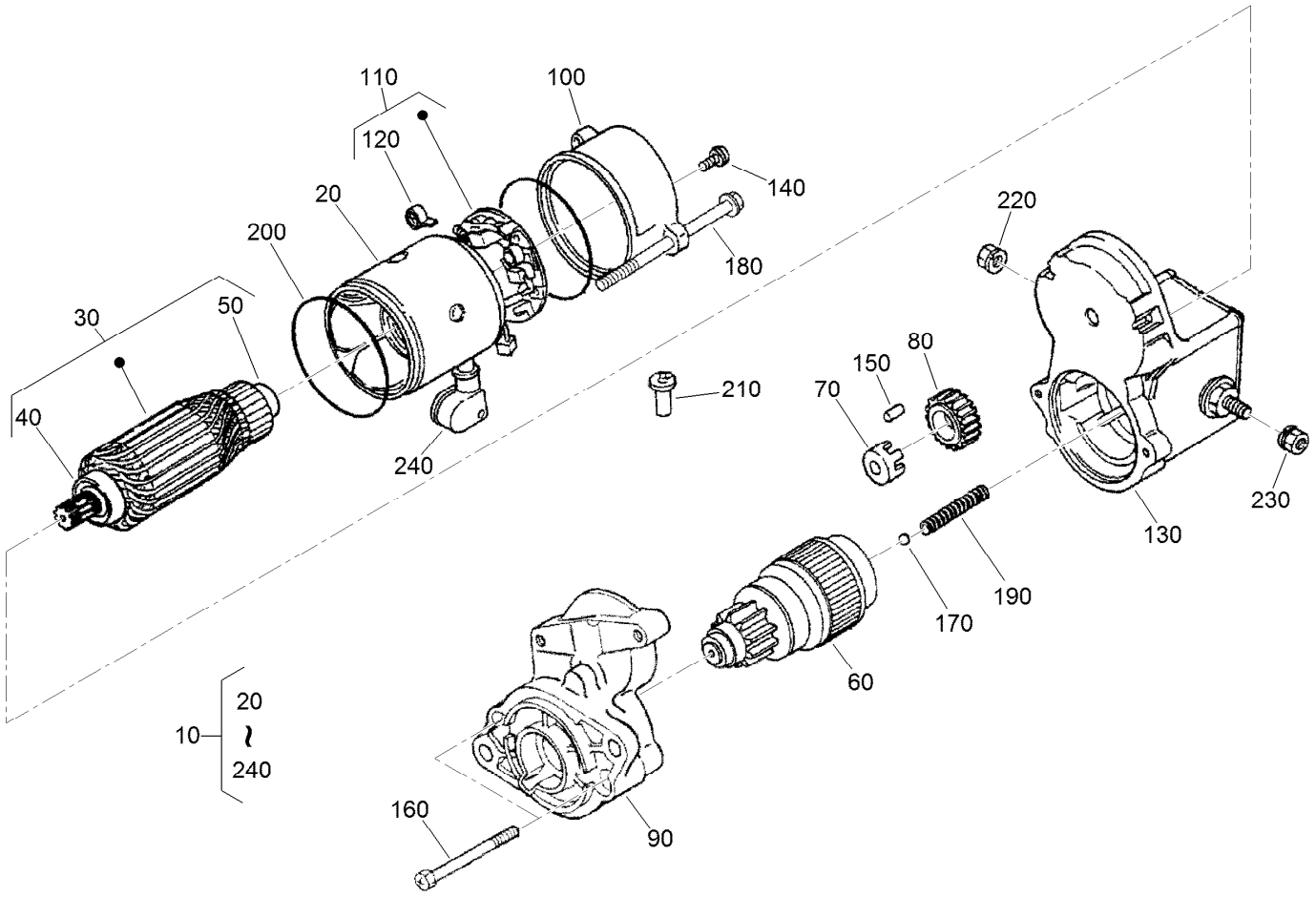


# Starter Assembly No. 131-6561

| Ref. | Part Number | Qty. | Description |
|---|---|---|---|
| 10 | 131-6561 | 1 | Starter ASM |
| 20 | 98-7741 | 1 | Yoke ASM |
| 30 | 98-7742 | 1 | Armature ASM |
| 40 | 98-7744 | 1 | Bearing |
| 50 | 98-7743 | 1 | Bearing |
| 60 | 99-8373 | 1 | Clutch-Running, Over |
| 70 | 98-7752 | 1 | Retainer |
| 80 | 98-7751 | 1 | Gear |
| 90 | 99-8374 | 1 | Frame-End, Drive |
| 100 | 98-7748 | 1 | Frame-End |
| 110 | 98-7749 | 1 | Brush Holder ASM |
| 120 | 98-7750 | 4 | Spring-Brush |

| Ref. | Part Number | Qty. | Description |
|---|---|---|---|
| 130 | 99-8372 | 1 | Magnetic Switch ASM |
| 140 | 98-7758 | 2 | Bolt ASM |
| 150 | 98-7753 | 5 | Roller |
| 160 | 98-7756 | 2 | Bolt |
| 170 | 98-7755 | 1 | Ball |
| 180 | 100-9240 | 2 | Bolt |
| 190 | 98-7754 | 1 | Spring |
| 200 | 98-7757 | 2 | O-Ring |
| 210 | 98-7759 | 1 | Pipe-Drain |
| 220 | 99-8376 | 1 | Nut-Hex |
| 230 | 98-7760 | 1 | Nut-Hex |
| 240 | 110-0020 | 1 | Cover-Terminal |

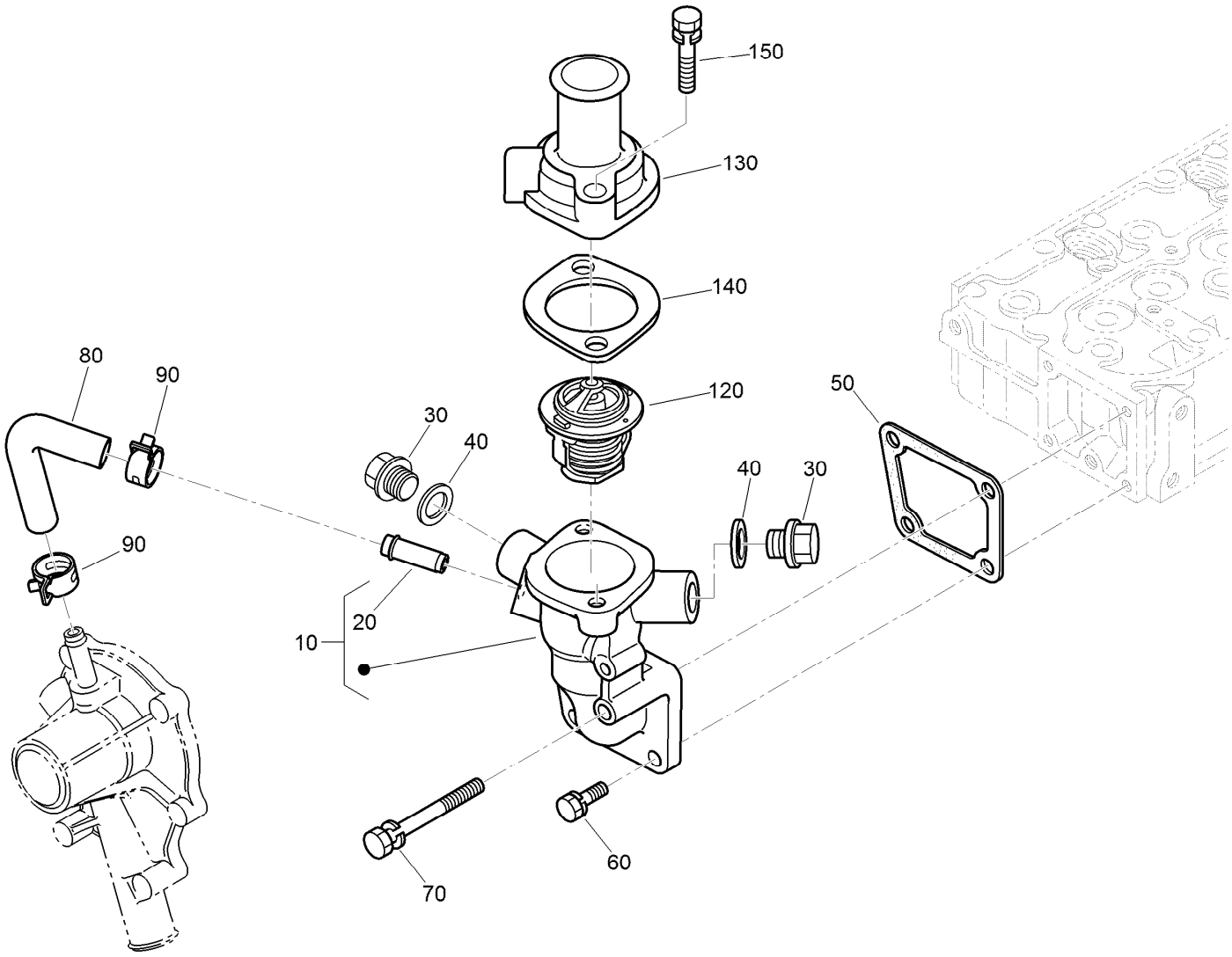


# Water Flange and Thermostat Assembly

| *Ref.* | *Part Number* | *Qty.* | *Description* |
|---|---|---|---|
| 10 | 98-9713 | 1 | Water Flange ASM |
| 20 | 98-9580 | 1 | Pipe-Return, Water |
| 30 | 105-3747 | 2 | Plug |
| 40 | 99-3583 | 2 | Gasket |
| 50 | 98-9638 | 1 | Gasket-Flange, Water |
| 60 | 98-7692 | 3 | Bolt |
| 70 | 98-9356 | 1 | Bolt |
| 80 | 98-9578 | 1 | Pipe-Return, Water |
| 90 | 125-9078 | 2 | Clamp-Hose |
| 120 | 98-7778 | 1 | Thermostat ASM |
| 130 | 98-9471 | 1 | Cover-Thermostat |
| 140 | 105-3748 | 1 | Gasket-Thermostat |
| 150 | 98-7777 | 2 | Bolt |

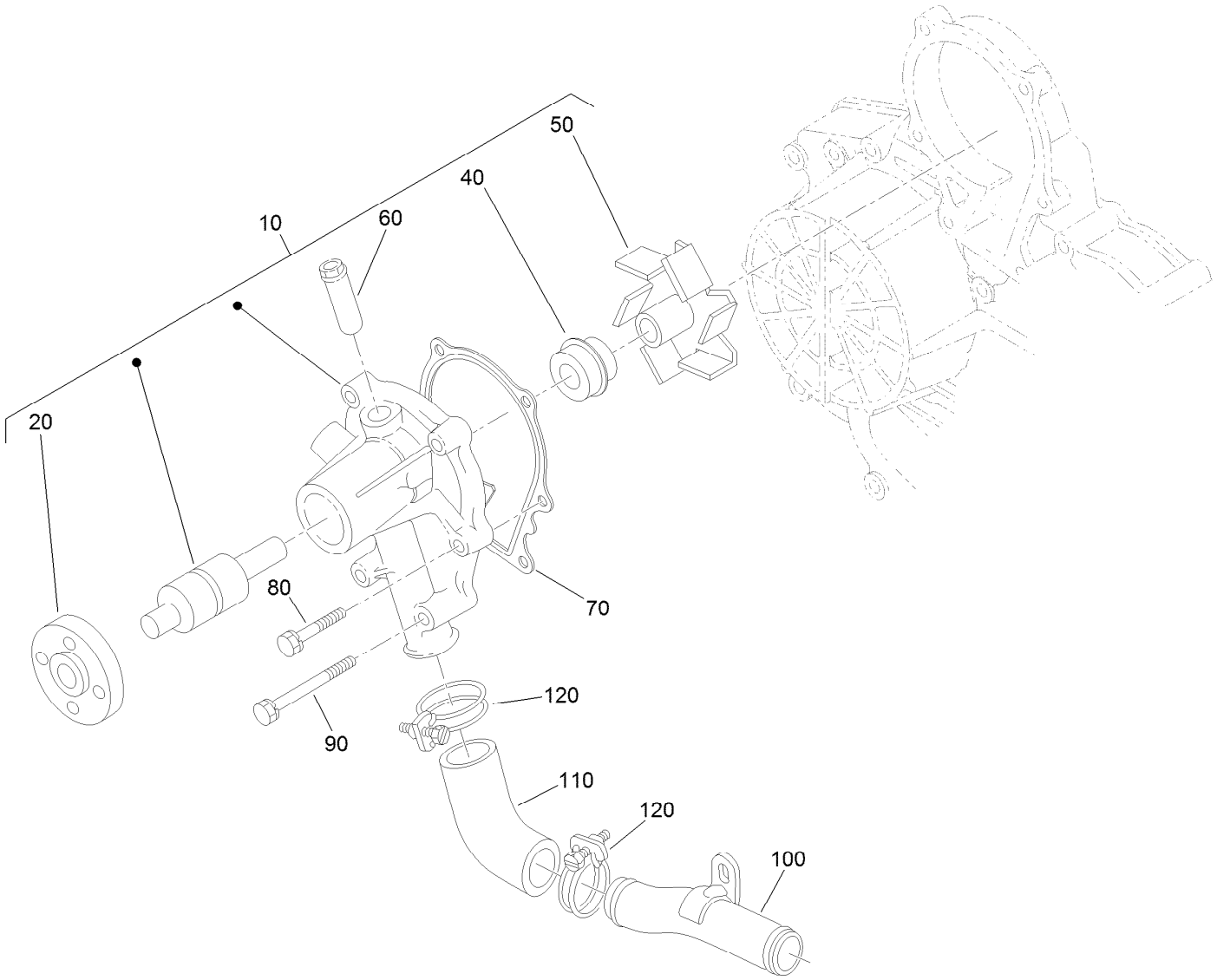


# Water Pump Assembly

| *Ref.* | *Part Number* | *Qty.* | *Description* |
|---|---|---|---|
| 10 | 107-9089 | 1 | Water Pump ASM |
| 20 | 99-3516 | 1 | Flange-Pump, Water |
| 40 | 105-3750 | 1 | Mechanical Seal ASM |
| 50 | 112-7017 | 1 | Impeller-Pump, Water |
| 60 | 100-1932 | 1 | Pipe-Return, Water |
| 70 | 99-3454 | 1 | Gasket-Pump, Water |
| 80 | 98-9353 | 4 | Bolt |
| 90 | 107-9090 | 2 | Bolt |
| 100 | 98-9716 | 1 | Pipe-Water |
| 110 | 107-9091 | 1 | Pipe-Water |
| 120 | 127-0439 | 2 | Clamp-Hose |

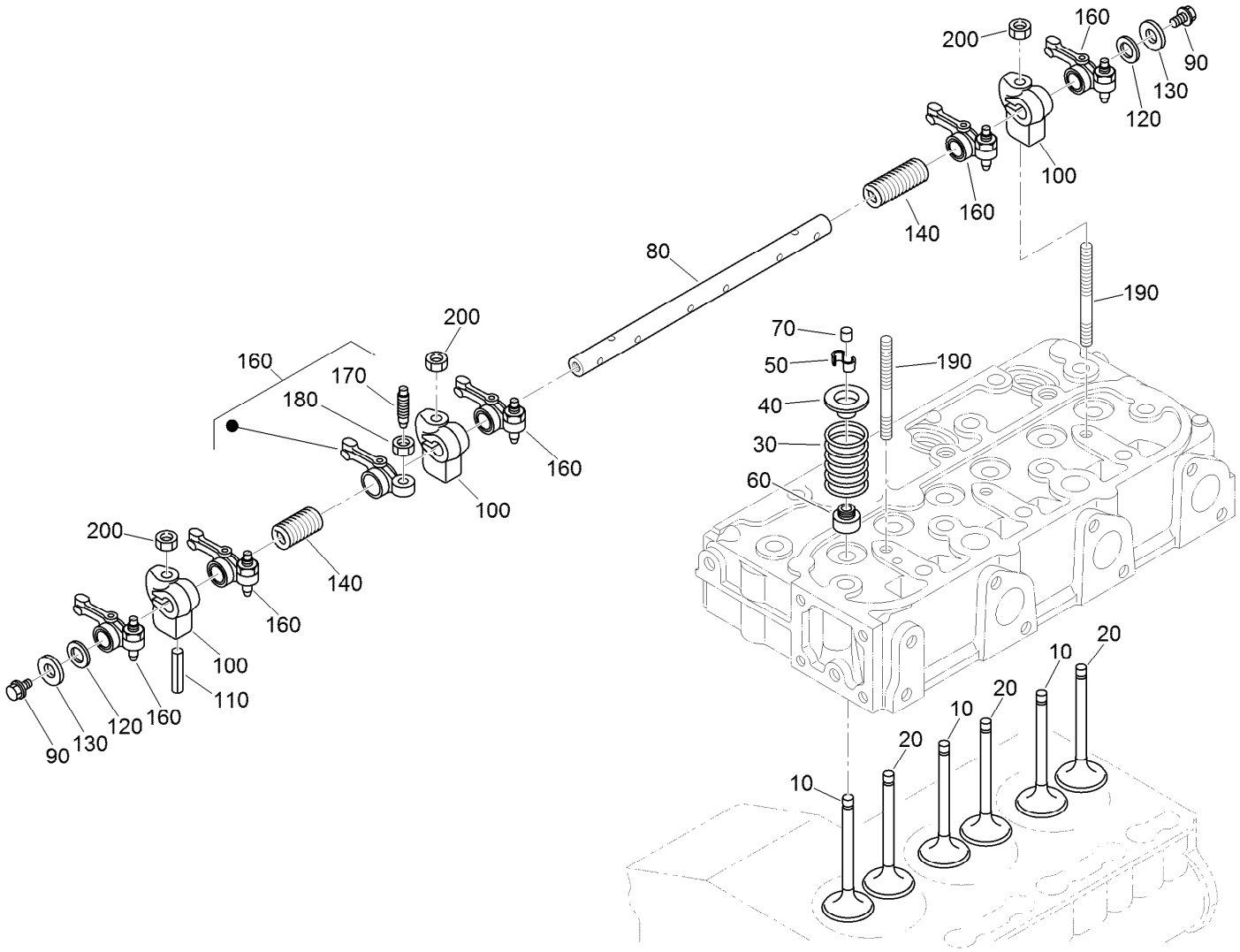


# Valve and Rocker Arm Assembly

| Ref. | Part Number | Qty. | Description |
|---|---|---|---|
| 10 | 112-7018 | 3 | Valve-Inlet |
| 20 | 120-2564 | 3 | Valve-Exhaust |
| 30 | 98-9648 | 6 | Spring-Valve |
| 40 | 107-9092 | 6 | Retainer-Spring |
| 50 | 117-7572 | 6 | Collet-Spring, Valve |
| 60 | 99-8385 | 6 | Seal-Stem, Valve |
| 70 | 98-9497 | 6 | Cap-Valve |
| 80 | 130-1248 | 1 | Shaft-Arm, Rocker |
| 90 | 99-8363 | 2 | Bolt-Flange |
| 100 | 98-9505 | 3 | Bracket-Arm, Rocker |
| 110 | 105-3758 | 1 | Pin-Spring |
| 120 | 98-9507 | 2 | Washer-Shaft, Rocker Arm |
| 130 | 110-3832 | 2 | Washer-Plain |
| 140 | 98-9504 | 2 | Spring-Arm, Rocker |
| 160 | 112-7020 | 6 | Rocker Arm ASM |
| 170 | 98-9502 | 6 | Screw-Adjusting |
| 180 | 98-9503 | 6 | Nut |
| 190 | 98-9506 | 3 | Stud |
| 200 | 131-6563 | 3 | Nut-Flange |

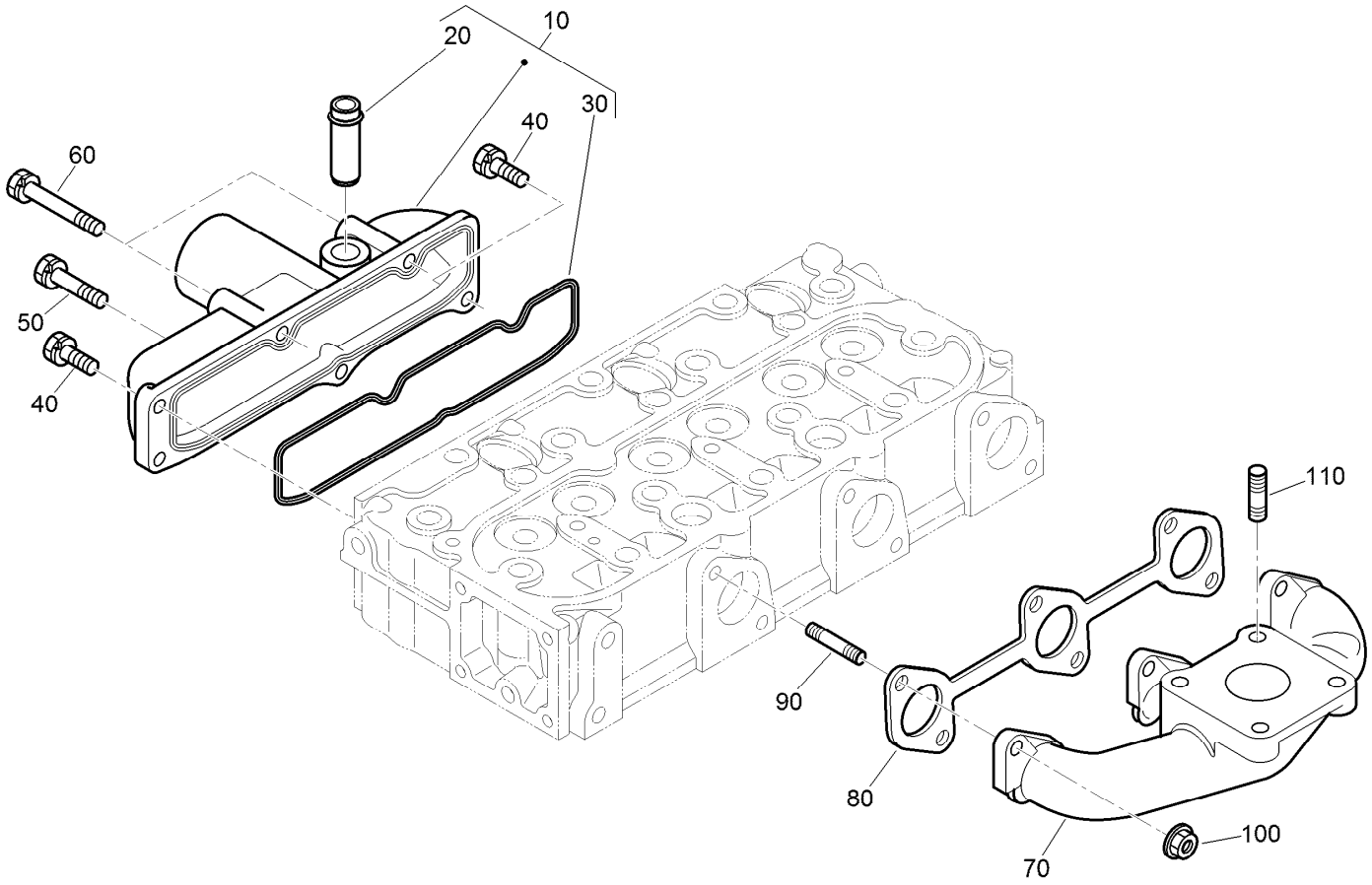


# Inlet and Exhaust Manifold Assembly

| *Ref.* | *Part Number* | *Qty.* | *Description* |
|---|---|---|---|
| 10 | 108-6577 | 1 | Inlet Manifold ASM |
| 20 | 98-9492 | 1 | Joint-Pipe, Breather |
| 30 | 98-9609 | 1 | Gasket-Manifold, Inlet |
| 40 | 127-0403 | 3 | Bolt-Flange |
| 50 | 98-9353 | 1 | Bolt |
| 60 | 125-9063 | 2 | Bolt-Sems |
| 70 | 107-9093 | 1 | Manifold-Exhaust |
| 80 | 99-8327 | 1 | Gasket-Manifold, Exhaust |
| 90 | 98-9588 | 6 | Stud |
| 100 | 98-9665 | 6 | Nut |
| 110 | 98-7769 | 4 | Stud |

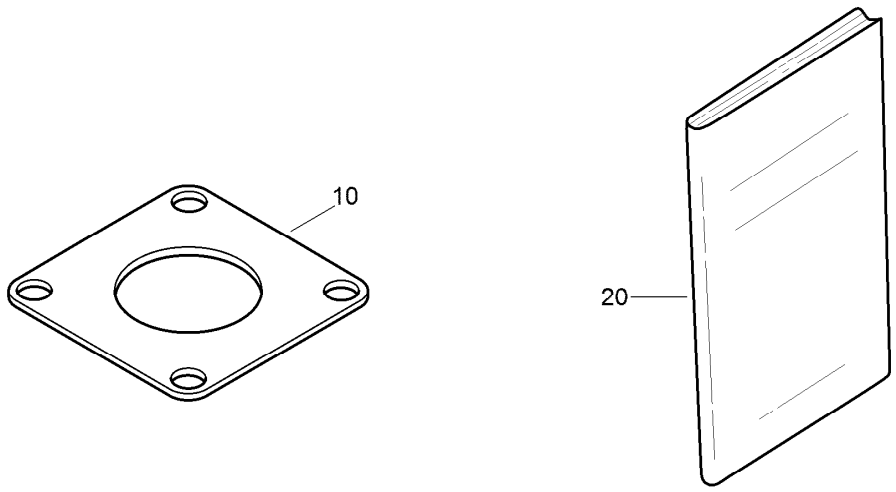


# Miscellaneous Engine Parts

| *Ref.* | *Part Number* | *Qty.* | *Description* |
|---|---|---|---|
| 10 | 99-8343 | 1 | Gasket-Muffler |
| 20 | 130-1543 | 1 | Manual-Operator |

# Attachments and Accessories

## For 03950 Reelmaster 5010-H Traction Unit

| Product Name | Model/Part |
|---|---|
| Operator Cooling Fan | 03247 |
| Switch Panel-Universal Sunshade | 03248 |
| Operator Golf Ball Guard, Reelmaster 3100/3500/5010 or Groundsmaster 3500/4300 Series Traction Unit | 03614 |
| 5 Inch Reel Verticutter | 03618 |
| Verticutter for 7in Reel Cutting Unit | 03619 |
| 8-Blade EdgeSeries Radial Reel DPA Cutting Unit with 5in Reel, Reelmaster 5010 Series Traction Unit | 03621 |
| 11-Blade EdgeSeries Forward Swept Reel DPA Cutting Unit with 5in Reel, Reelmaster 5010 Series Traction Unit | 03623 |
| 22in 5in 11 Bld (rr) Dpa Cu (5010) | 03624 |
| 8-Blade Radial Reel DPA Cutting Unit with 7in Reel | 03638 |
| 8-Blade Forward Swept Reel DPA Cutting Unit with 7in Reel | 03639 |
| 11-Blade Forward Swept Reel DPA Cutting Unit with 7in Reel | 03641 |
| 7-in, 11 Blade ES (RR) DPA Cutting Unit | 03643 |
| CrossTrax All-Wheel Drive Kit, Reelmaster 5010-H, 5410-D, or 5510-D Series Traction Unit | 03645 |
| Finishing Kit, DPA Cutting Unit with 5in Reel, Reelmaster 5010-H Series Traction Unit | 03651 |
| Finishing Kit, DPA Cutting Unit with 7in Reel, Reelmaster 5010-H Series Traction Unit | 03653 |
| CrossTrax All-Wheel Drive Finishing Kit | 03656 |
| Air Ride Seat Suspension Kit | 03667 |
| Turf Evaluator | 04399 |
| Wheel Weight Kit | 104-1478 |
| Premium All Purpose Grease (Tube) | 108-1190 |
| Rear Lift Cylinder Limit Kit | 110-9604 |
| 5in Air Cleaner Safety Element | 114-4057 |
| Premium Synthetic Bio-Degradable Hydraulic Fluid (5 Gallon Pail) | 119-2157 |
| Premium Synthetic Bio-Degradable Hydraulic Fluid (55 Gallon Drum) | 119-2158 |
| Premium Engine Oil 10w30 (55 Gallon Drum) | 121-6392 |
| Premium Engine Oil 10w30 (5 Gallon Pail) | 121-6393 |
| Smooth Rear Tire | 127-2796 |
| Hi-Back Seat Cover | 133-1308 |
| Smooth Front Tire | 133-2940 |
| PX Hydraulic Fluid (5 Gal) | 133-8086 |
| PX Hydraulic Fluid (55 Gal) | 133-8087 |
| Pin and Lanyard Asm | 136-8045 |
| Beacon Kit | 138-2699 |
| Power Harness Kit (RM5XXX) | 138-2994 |
| Work Lights Kit, Groundsmaster and Reelmaster Traction Units with Universal Sunshade | 140-1554 |
| MVP Kit-Hyd Hose | 145-2576 |
| Mvp Kit 1000 Hour-rm5010-h Kubota D11 | 145-2581 |
| Brush and Handle Kit | 29-9100 |
| White Universal Sunshade | 30669 |
| Red Universal Sunshade | 30671 |
| EU Light Kit | 31579 |

# Attachments and Accessories (continued)

New Red Paint - Gallon ..... 361-11
Dark Metallic Gray Aerosol Paint ..... 361-12
Semi-Gloss Black Spray Paint ..... 361-9
Air Dry Red Paint - Qt ..... 5340
Spark Arrestor ..... 98-9099

## Notes:

## Notes:

## Notes:




**Count on it.**