Form No. 3397-859 Rev C

TORO®

Count on it.

Parts Catalog

22in 11-Blade DPA Cutting Unit

Reelmaster® 3550 or 3555 Series Traction Unit

Model No. 03488—Serial No. 315000001 and Up

Register at www.Toro.com.
Original Instructions (EN)

CE

3397-859 C

Ordering Replacement Parts

To order replacement parts, please supply the part number, the quantity, and the description of each part desired.

Understanding Reference Numbers

Each identified part in an illustration has a reference number. The reference number for a part also appears in the parts list, along with other information about the part.

This catalog uses two special reference number formats, one to indicate parts in a service assembly and another to indicate the quantity of a given part in an illustration.

Service Assembly Reference Numbers

Parts in service assemblies have reference numbers in the form a:b. The a represents the reference number of the entire service assembly and the b represents a sequential number unique to each part within the service assembly.

For example, a wheel assembly might be identified by reference number 6, the tire by 6:1, the valve by 6:2, and the wheel by 6:3. When you order the assembly identified by reference number 6, you receive all parts identified by reference numbers 6:1,6:2, and 6:3. However, you may also order any part individually. Reference numbers of this type appear in illustration and in parts lists.

Reference Numbers Indicating Quantity

In an illustration, if a reference number indicates more than one part, the reference number has the form nX y. The n represents the quantity of the part, the X is the multiplication symbol, and the y represents the reference number.

For example, in an illustration, the reference number 2X 37 means that two of the parts identified by reference number 37 are indicated.

Contents

Frame Assembly 4
Reel and Bedbar Assembly 6
Optional Heavy-Duty MVP Kit No. 120-7230 8
Roller Assembly 9
Optional Long Roller Assembly No. 114-5404 10
Short Roller Assembly No. 114-5406 11
Plastic Wiehle Roller Assembly No. 114-5400 12
Optional Full Front Roller Assembly No. 114-5412 13
Optional Plastic Shoulder Roller Assembly No. 114-5421 14
Optional High Height-of-Cut Assembly No. 110-9600 15
Shield Assembly 16
Optional Tool Assembly 17
Attachments and Accessories 18

© 2024—The Toro® Company
8111 Lyndale Avenue South
Bloomington, MN 55420

Contact us at www.Toro.com.
Printed in the USA.
All Rights Reserved

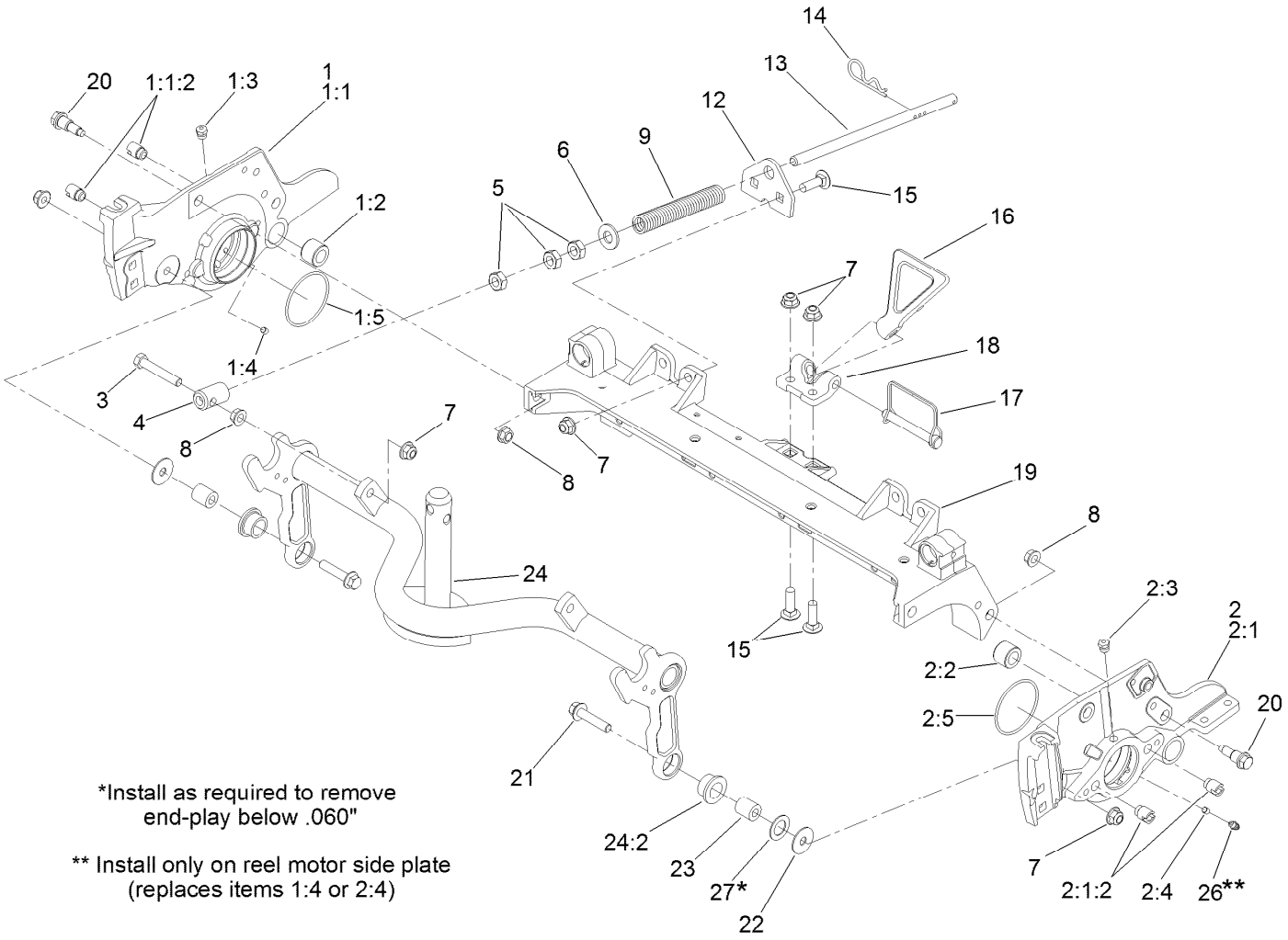

Frame Assembly

Ref.	Part Number	Qty.	Description
1	127-0287	1	5 Inch RH Side Plate ASM
1:1		1	5 Inch RH Side Plate Sub ASM ■
1:1:2	127-7149	2	Insert-Threaded, Side Plate
1:2	106-9618	1	Bushing-Rubber
1:3	302-39	1	Fitting-Plug
1:4	3245-35	1	Screw-Set, HSH
1:5	117-8177	1	O-Ring
2	127-0285	1	5 Inch LH Side Plate ASM
2:1		1	5 Inch LH Side Plate Sub ASM ■
2:1:2	127-7149	2	Insert-Threaded, Side Plate
2:2	106-9618	1	Bushing-Rubber
2:3	302-39	1	Fitting-Plug
2:4	3245-35	1	Screw-Set, HSH
2:5	117-8177	1	O-Ring
3	104-3396	1	Screw-HH
4	99-8662	1	Tube-Spring

Ref.	Part Number	Qty.	Description
5	3218-5	3	Nut-Jam
6	87-7270	1	Washer-Thrust
7	104-8301	7	Nut-HF, NI
8	3290-357	5	Nut-HSF
9	112-1725	1	Spring-Compression
12	110-4069	1	Bracket
13	107-2970	1	Rod
14	92-2762	1	Pin-Hair
15	3231-25	4	Bolt-CARR
16	119-8010-03	1	Kickstand ●
17	107-7400	1	Pin-Lynch
18	110-4058	1	Bracket-Chain
19	107-2951	1	Frame
20	107-2979	4	Bolt-Shoulder
21	3234-19	2	Screw-HHF
22	130-8094	2	Washer-Plain
23	108-4279	2	Spacer-Frame
24	131-4714	1	Carrier Frame ASM

● Optional Equipment

■ Not serviced separately

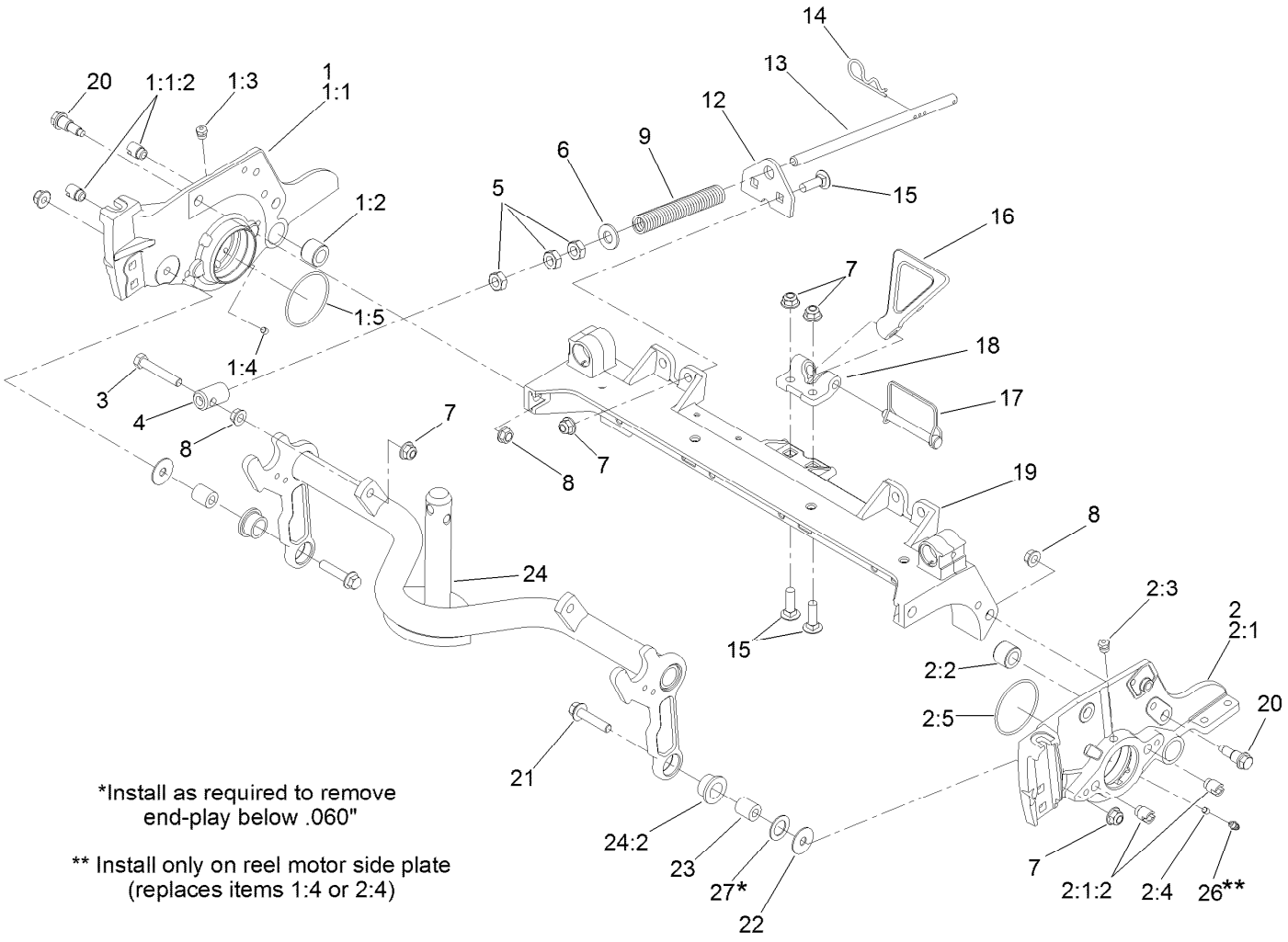

Frame Assembly (continued)

Ref.	Part Number	Qty.	Description
24:2	93-2877	2	Bushing

Ref.	Part Number	Qty.	Description
26	302-5	1	Fitting-Grease
27	67-9410	1	Washer

● Optional Equipment

■ Not serviced separately

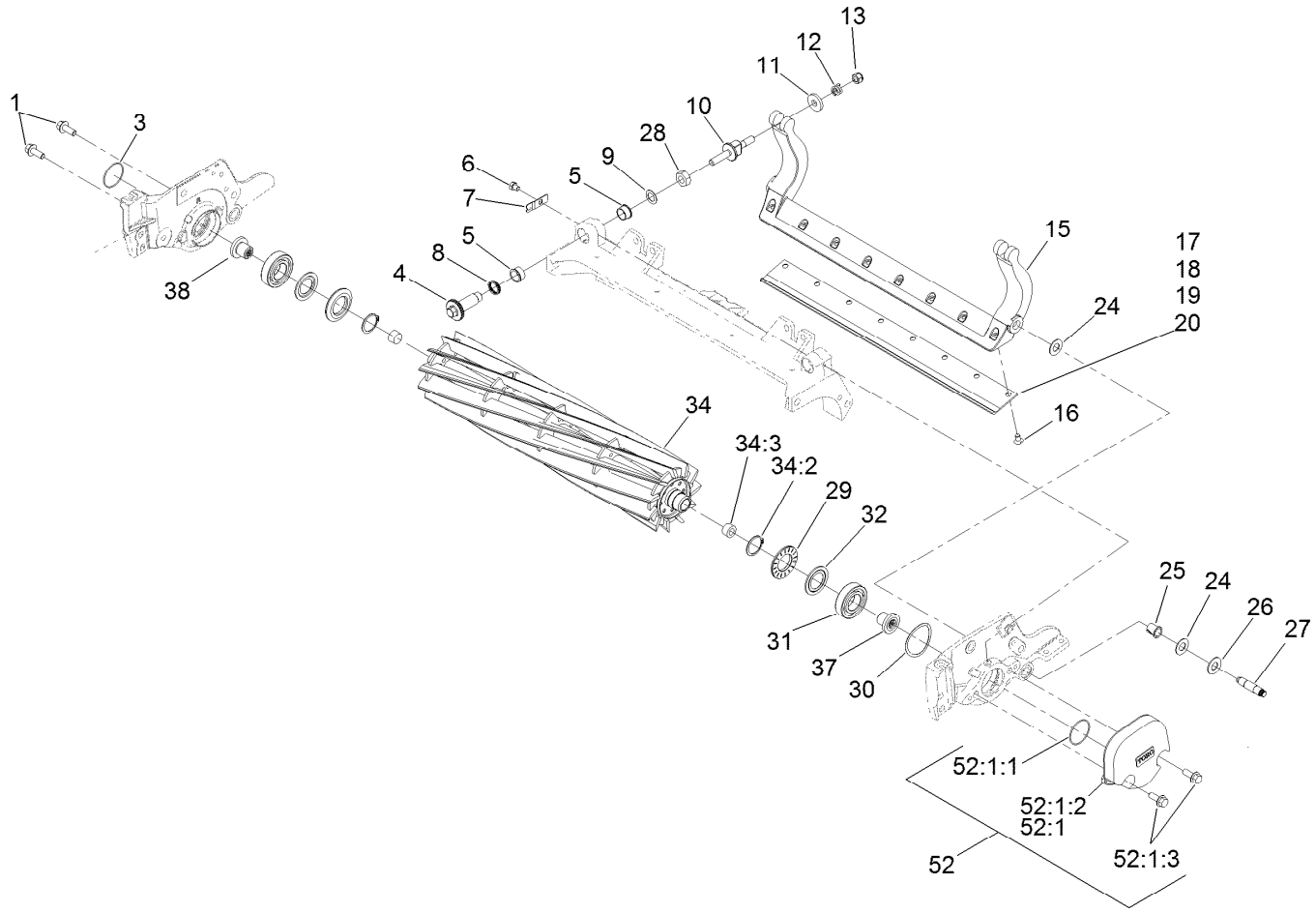

Reel and Bedbar Assembly

Ref.	Part Number	Qty.	Description
1	3234-11	2	Screw-HHF
3	237-68	1	O-Ring
4	120-5118	2	Shaft-Adjuster
5	106-5344	4	Bushing-Flange, Keyed
6	119-4067	2	Screw-HH
7	99-2097	2	Detent
8	120-5116	2	Washer-Wave
9	108-0015	2	Washer-Flat
10	115-7039	2	Screw-Adjuster, Bedbar
11	119-4155	2	Washer-Hardened
12	120-5120	2	Spring-Compression
13	119-4039	2	Nut-Hex
15	105-8095-01	1	Bedbar-Fairway ●■
15	131-3220-03	1	Bedbar-Aggresive, 5 Inch ● ■
16	119-4151	8	Screw-Bedknife
17	108-9095	1	Bedknife-Edgemax (Fairway) ●■
18	108-9096	1	Bedknife-STD (Fairway) ■
19	127-7132	1	Bedknife-Edgemax, Lowcut ●■
20	110-4084	1	Bedknife-Low HOC (Fairway) ■
24	61-1950	4	Washer-Plastic
25	56-9520	2	Bushing-Flanged
26	131-4715	2	Washer
27	106-9623	2	Bolt-Bedbar
28	3296-33	4	Nut-Lock, NI
29	127-4284	2	Washer-Special
30	115-5258	1	Spring-Wire, Flat
31	115-3296	2	Bearing-Sealed
32	115-3299	2	Seal-Flocked
34	132-7112	1	ES Reel-5In Fwy (22) 11 Bld (Fsr)
34:2	92-2601	2	Ring-Retaining
34:3	127-7118	2	Plug-Shaft, Reel

● Not illustrated
▲ Not serviced separately

■ Optional Equipment

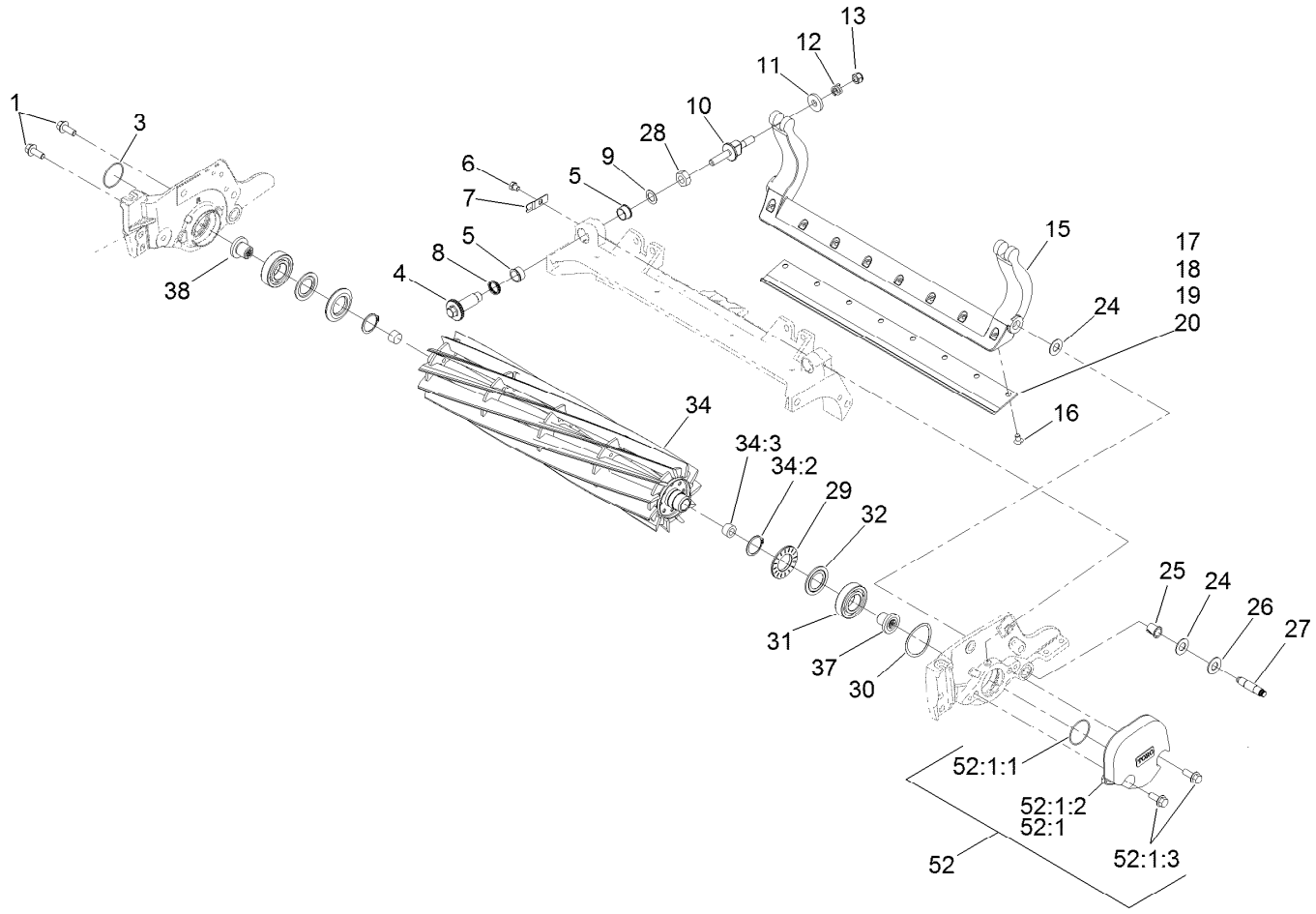

Reel and Bedbar Assembly (continued)

Ref.	Part Number	Qty.	Description
37	130-0064	1	Insert-Threaded, 5 Inch (LH)
38	130-0063	1	Insert-Threaded, 5 Inch (RH)
45	120-7230	1	Rm HD DPA MVP Kit ●■
52	03484	1	5 Inch Weight-Cu (W/O Attach)

Ref.	Part Number	Qty.	Description
52:1		1	Cu Weight Kit ▲
52:1:1	237-68	5	O-Ring
52:1:2	125-2779-01	5	Weight-End, 5 Inch
52:1:3	3234-11	10	Screw-HHF

● Not illustrated
▲ Not serviced separately
■ Optional Equipment

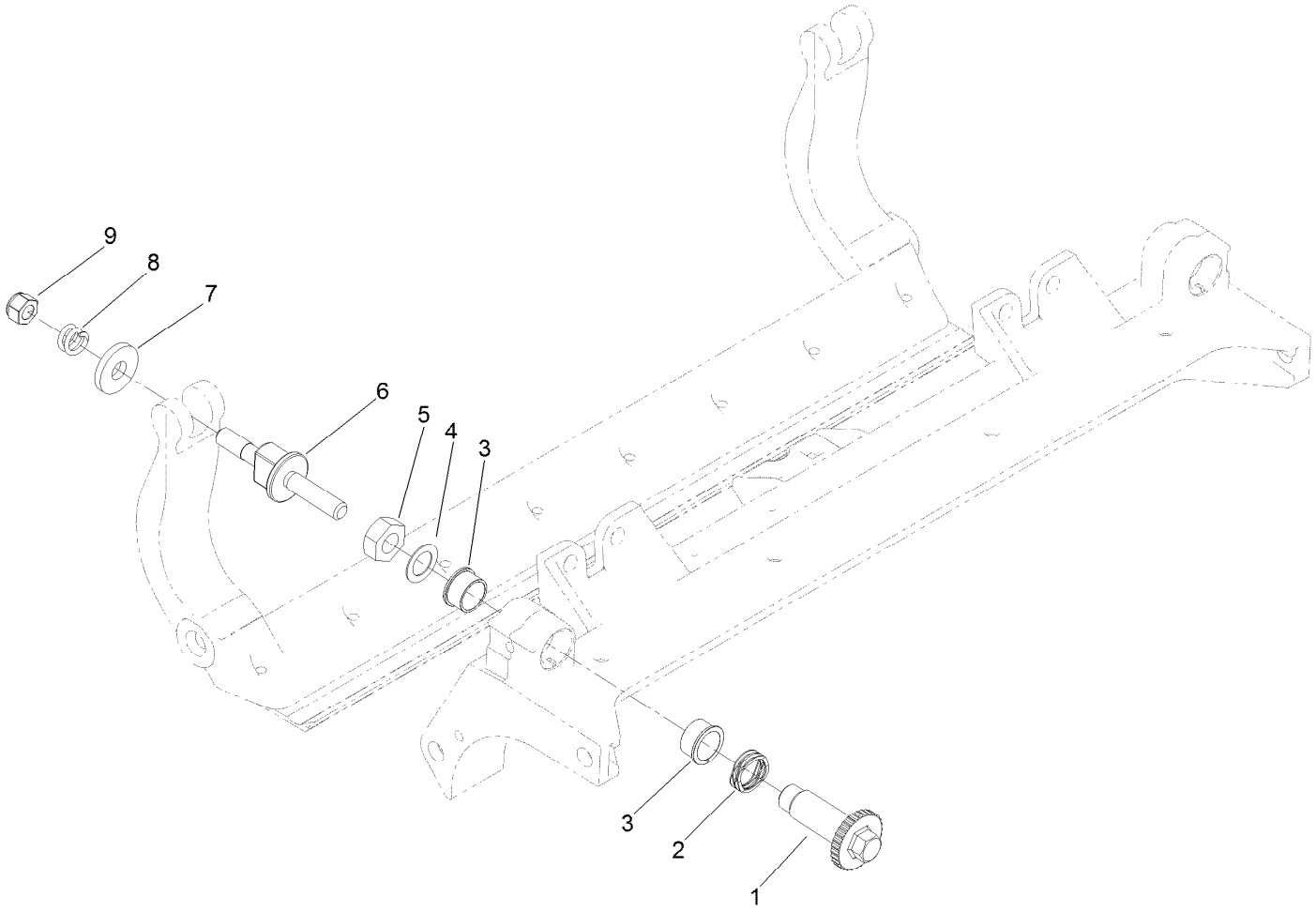

Optional Heavy-Duty MVP Kit No. 120-7230

Ref.	*Part Number*	*Qty.*	*Description*
1	120-5118	2	Shaft-Adjuster
2	120-5116	2	Washer-Wave
3	106-5344	4	Bushing-Flange, Keyed
4	108-0015	2	Washer-Flat
5	3296-33	2	Nut-Lock, NI
6	115-7039	2	Screw-Adjuster, Bedbar
7	119-4155	2	Washer-Hardened
8	120-5120	2	Spring-Compression
9	119-4039	2	Nut-Hex

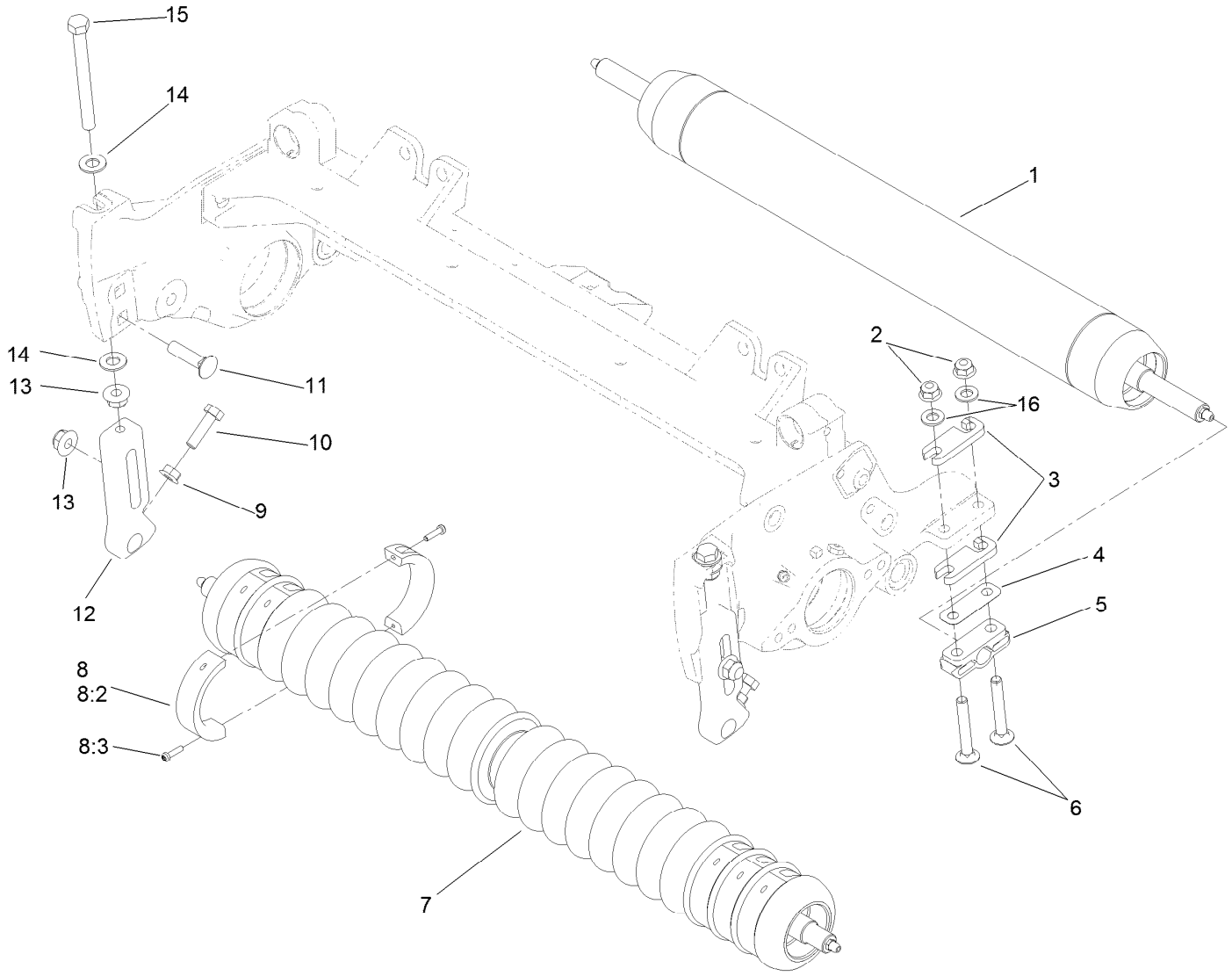

Roller Assembly

Ref.	Part Number	Qty.	Description
1	114-5404	1	Long Rear Roller ASM ●■
1	114-5406	1	2.5In DIA Short Rear Roller ASM
2	104-8300	4	Nut-HF, NI
3	119-0626	4	Shim-Roller
4	107-4001	2	Shim-Roller (0.01 Inch) ■
5	106-3924	2	Bracket-Roller, Rear
6	3230-7	4	Bolt-CARR
7	114-5400	1	Plastic Wiehle Roller ASM
7	114-5412	1	Full Front Roller ASM (3In DIA) ●■
7	114-5421	1	Plastic Shoulder Roller ASM ●■

Ref.	Part Number	Qty.	Description
8	104-8215	6	Collar Kit ■
8:2	100-4959	2	Collar
8:3	104-1835	2	Screw
9	32128-20	2	Nut-HF
10	322-16	2	Screw-HH
11	3231-4	2	Screw-CARR
12	125-2796	2	Bracket-Front HOC
13	104-8301	4	Nut-HF, NI
14	48-9220	4	Washer-Flat
15	107-4026	2	Screw-HH
16	94-6936	4	Washer-Hardened
50	110-9600	1	Rm DPA High HOC Kit (F06-F17) ●■

● Not illustrated

■ Optional Equipment

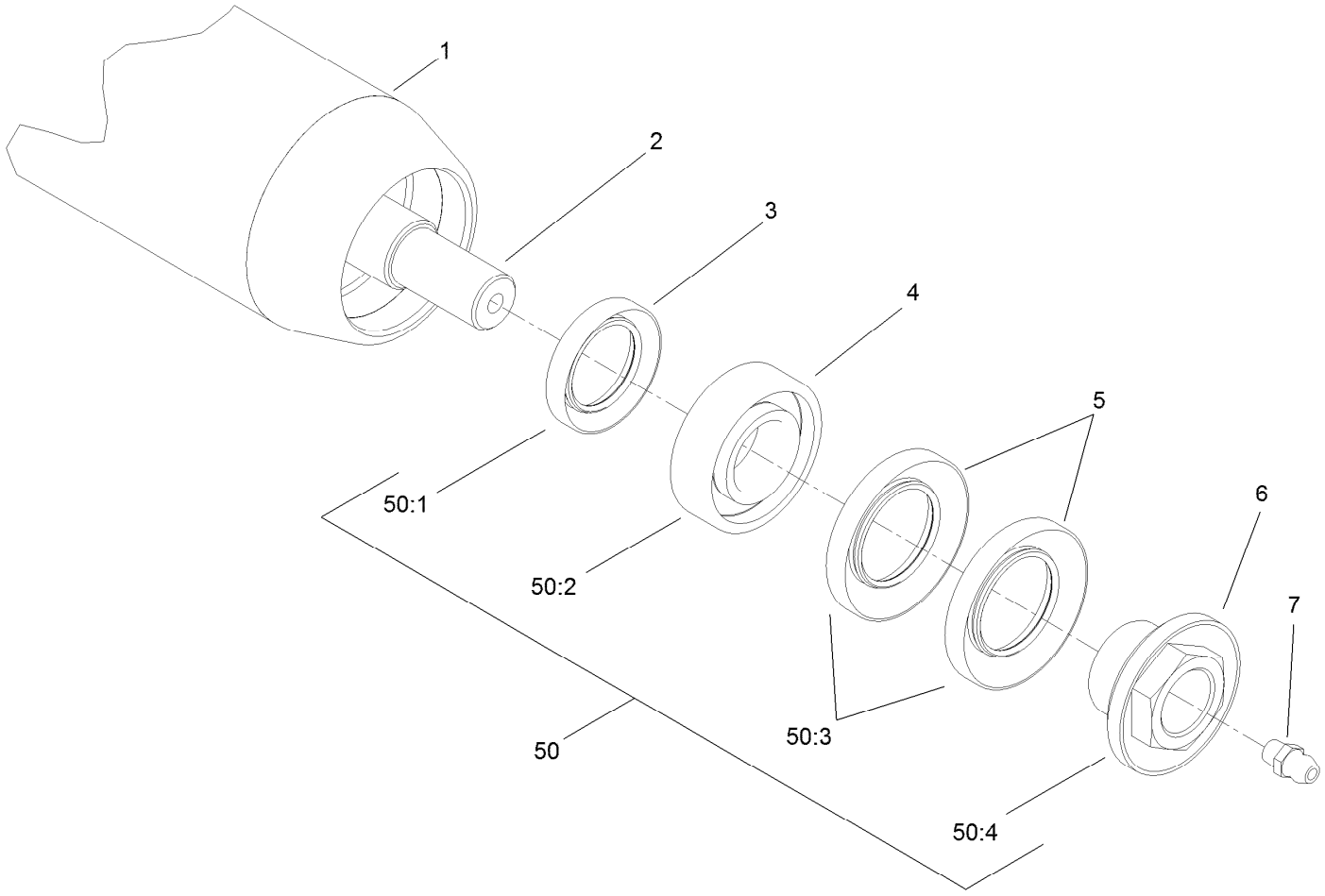

Optional Long Roller Assembly No. 114-5404

Ref.	*Part Number*	*Qty.*	*Description*
1	115-8294-03	1	Tube-Roller (Long)
2	114-5407	1	Shaft-Long, Rear Roller
3	114-3717	2	Seal-Oil
4	112-5290	2	Bearing-Steel, Stainless
5	112-7494	4	Seal
6	114-5411	2	Nut-Lock, Bearing
7	302-5	2	Fitting-Grease
50	114-5430	1	Roller Rebuild Kit ●
50:1	114-3717	2	Seal-Oil
50:2	112-5290	2	Bearing-Steel, Stainless
50:3	112-7494	4	Seal
50:4	114-5411	2	Nut-Lock, Bearing

● Optional Equipment

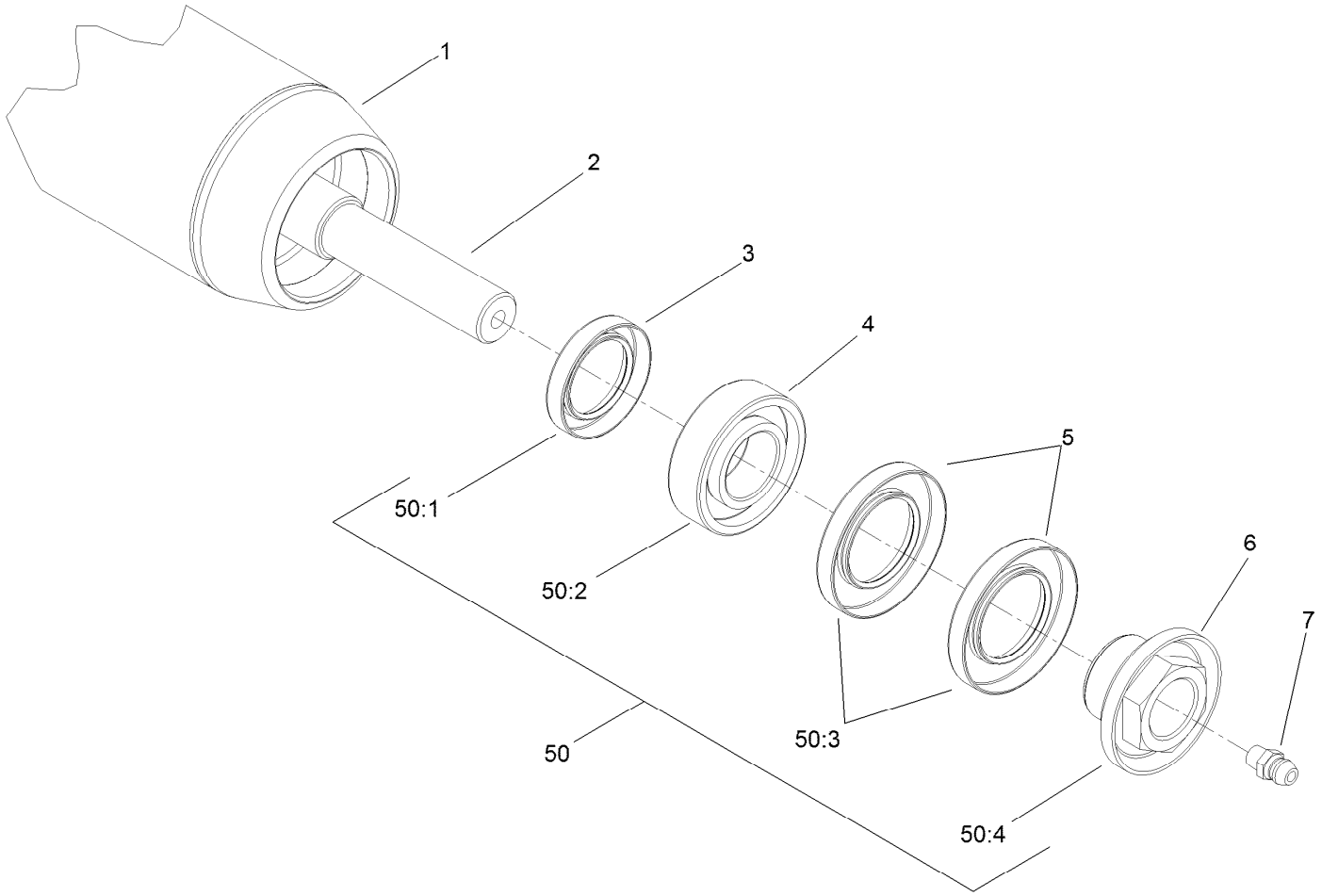

Short Roller Assembly No. 114-5406

Ref.	*Part Number*	*Qty.*	*Description*
1	115-8293-03	1	Tube-Roller, 2.5 Inch DIA (Short)
2	114-5410	1	Shaft-Short, Rear Roller
3	114-3717	2	Seal-Oil
4	112-5290	2	Bearing-Steel, Stainless
5	112-7494	4	Seal
6	114-5411	2	Nut-Lock, Bearing
7	302-5	2	Fitting-Grease
50	114-5430	1	Roller Rebuild Kit ●
50:1	114-3717	2	Seal-Oil
50:2	112-5290	2	Bearing-Steel, Stainless
50:3	112-7494	4	Seal
50:4	114-5411	2	Nut-Lock, Bearing

● Optional Equipment

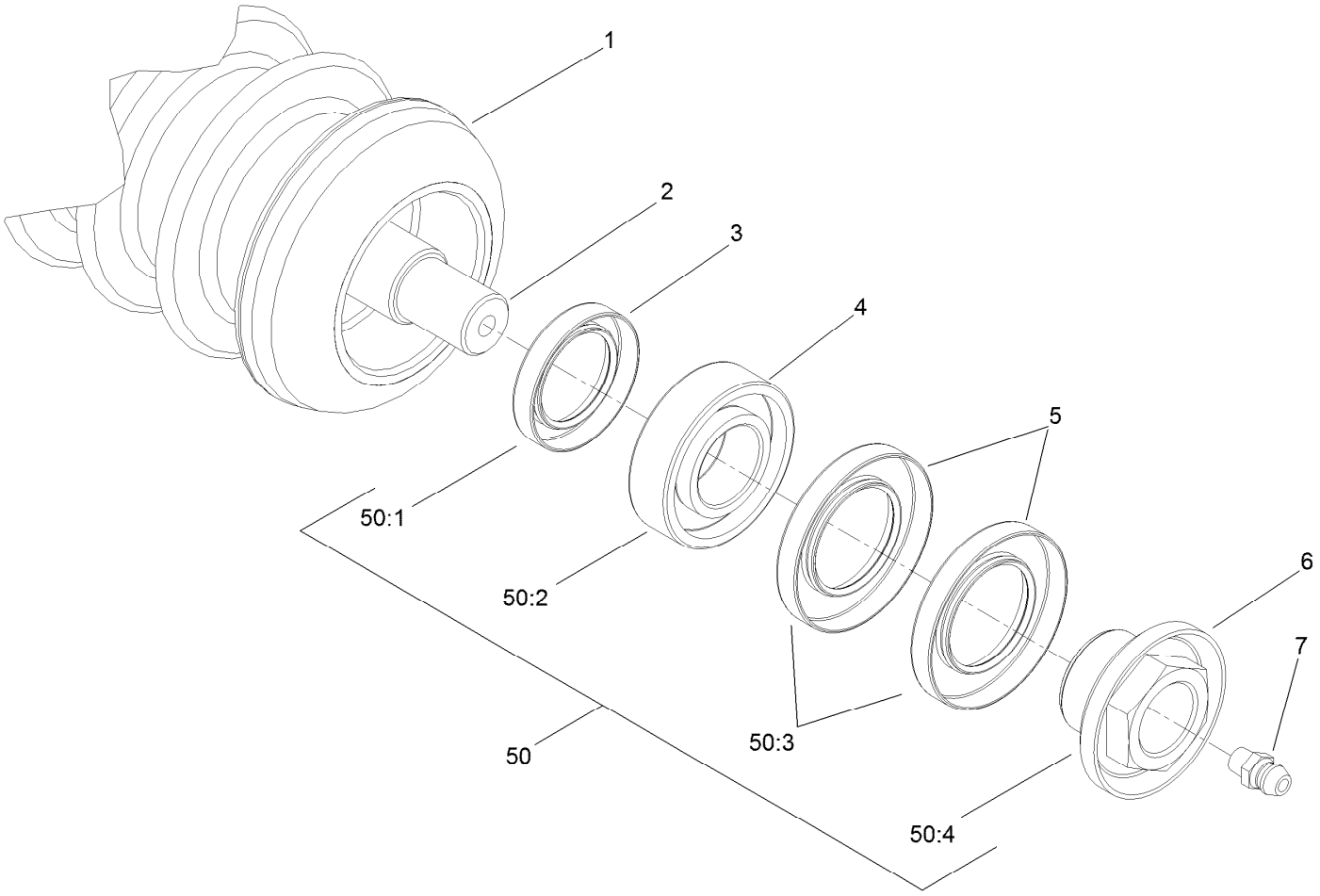

Plastic Wiehle Roller Assembly No. 114-5400

Ref.	*Part Number*	*Qty.*	*Description*
1	114-5401	1	Wiehle Roller Plastic (22In)
2	114-5403	1	Shaft-Roller, Front
3	114-3717	2	Seal-Oil
4	112-5290	2	Bearing-Steel, Stainless
5	112-7494	4	Seal
6	114-5411	2	Nut-Lock, Bearing
7	302-5	2	Fitting-Grease
50	114-5430	1	Roller Rebuild Kit ●
50:1	114-3717	2	Seal-Oil
50:2	112-5290	2	Bearing-Steel, Stainless
50:3	112-7494	4	Seal
50:4	114-5411	2	Nut-Lock, Bearing

● Optional Equipment

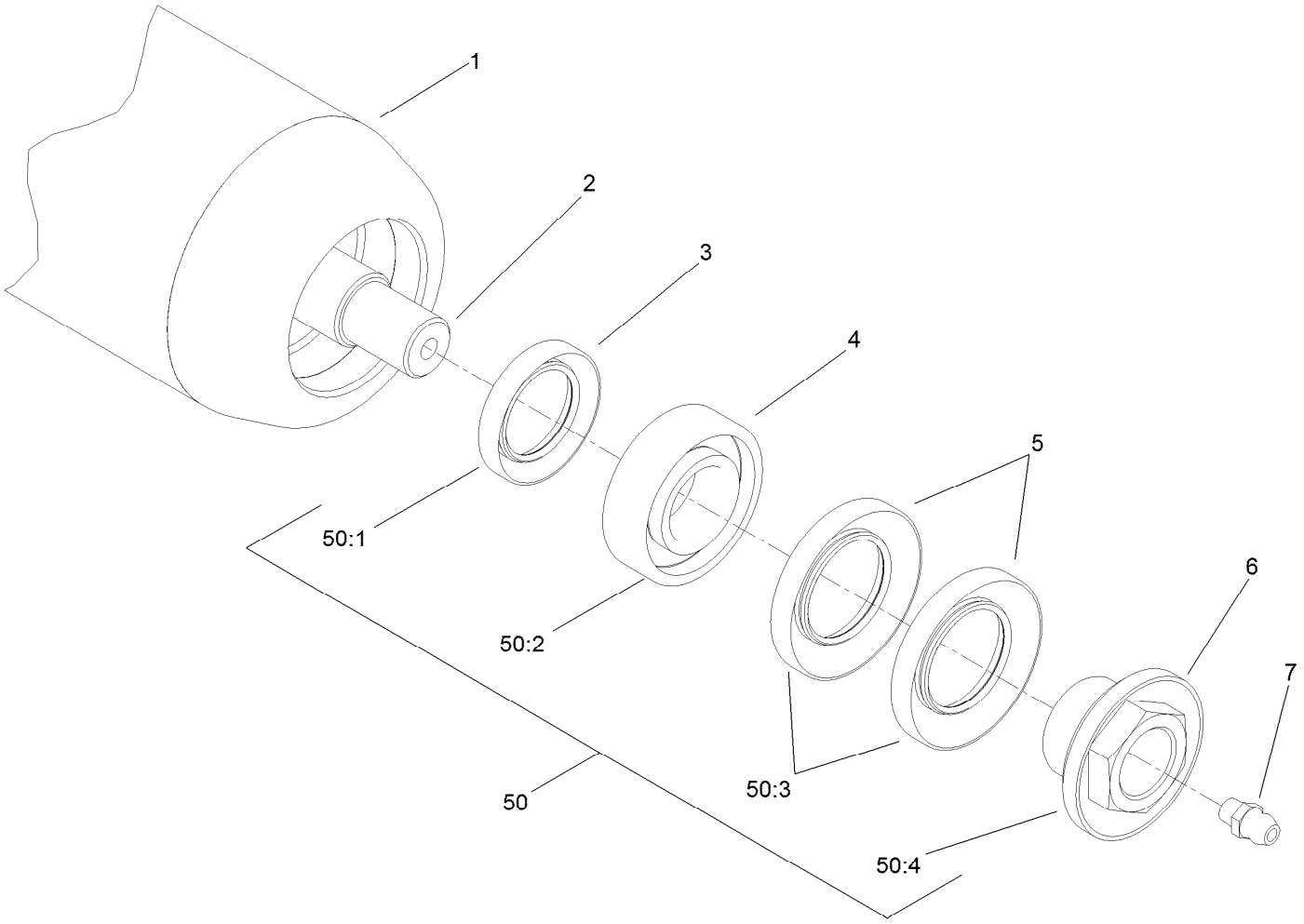

Optional Full Front Roller Assembly No. 114-5412

Ref.	*Part Number*	*Qty.*	*Description*
1	115-8297-03	1	Tube-Roller, Full
2	114-5403	1	Shaft-Roller, Front
3	114-3717	2	Seal-Oil
4	112-5290	2	Bearing-Steel, Stainless
5	112-7494	4	Seal
6	114-5411	2	Nut-Lock, Bearing
7	302-5	2	Fitting-Grease
50	114-5430	1	Roller Rebuild Kit ●
50:1	114-3717	2	Seal-Oil
50:2	112-5290	2	Bearing-Steel, Stainless
50:3	112-7494	4	Seal
50:4	114-5411	2	Nut-Lock, Bearing

● Optional Equipment

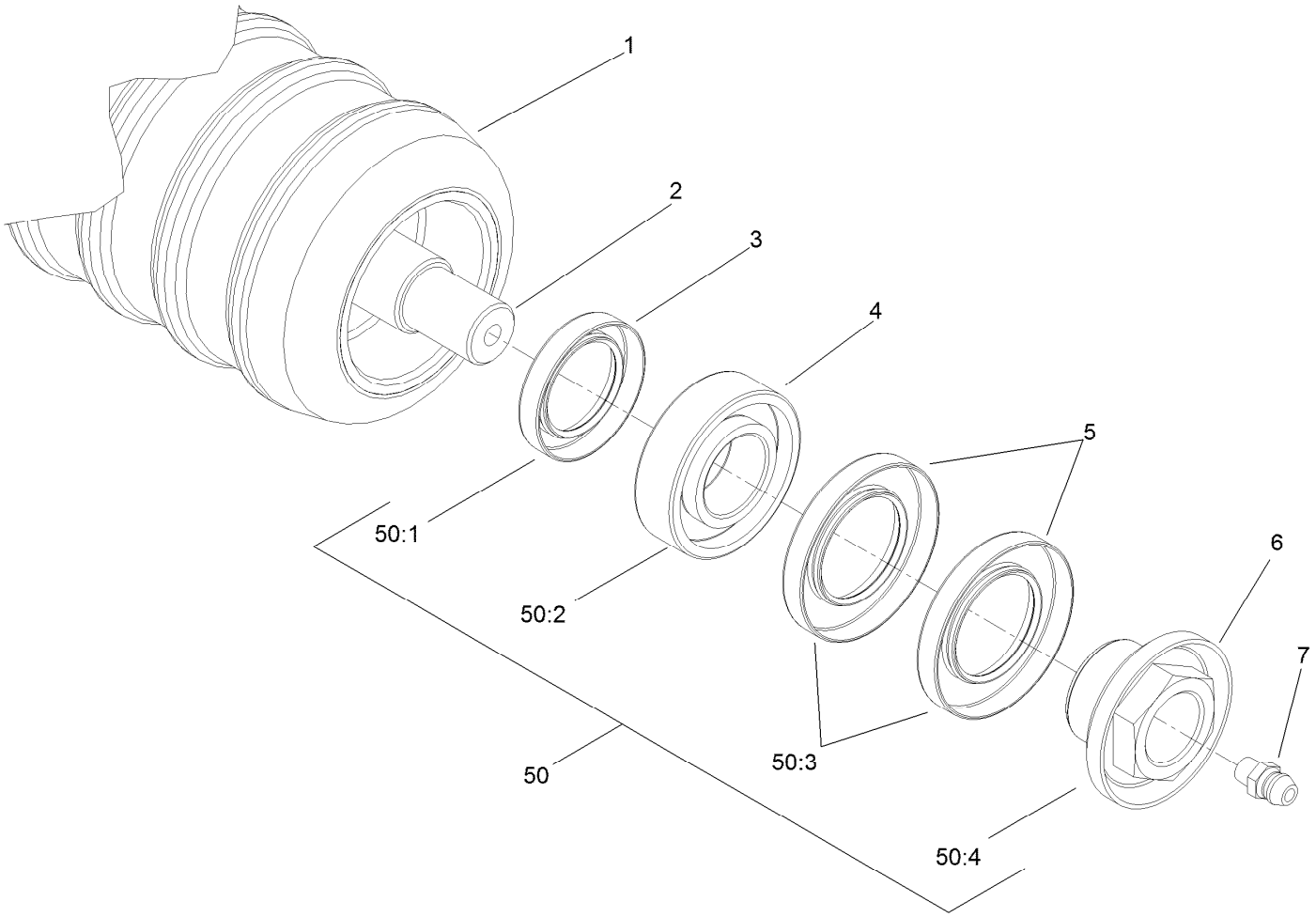

Optional Plastic Shoulder Roller Assembly No. 114-5421

Ref.	*Part Number*	*Qty.*	*Description*
1	114-5422	1	Roller-Shoulder, Plastic
2	114-5403	1	Shaft-Roller, Front
3	114-3717	2	Seal-Oil
4	112-5290	2	Bearing-Steel, Stainless
5	112-7494	4	Seal
6	114-5411	2	Nut-Lock, Bearing
7	302-5	2	Fitting-Grease
50	114-5430	1	Roller Rebuild Kit ●
50:1	114-3717	2	Seal-Oil
50:2	112-5290	2	Bearing-Steel, Stainless
50:3	112-7494	4	Seal
50:4	114-5411	2	Nut-Lock, Bearing

● Optional Equipment

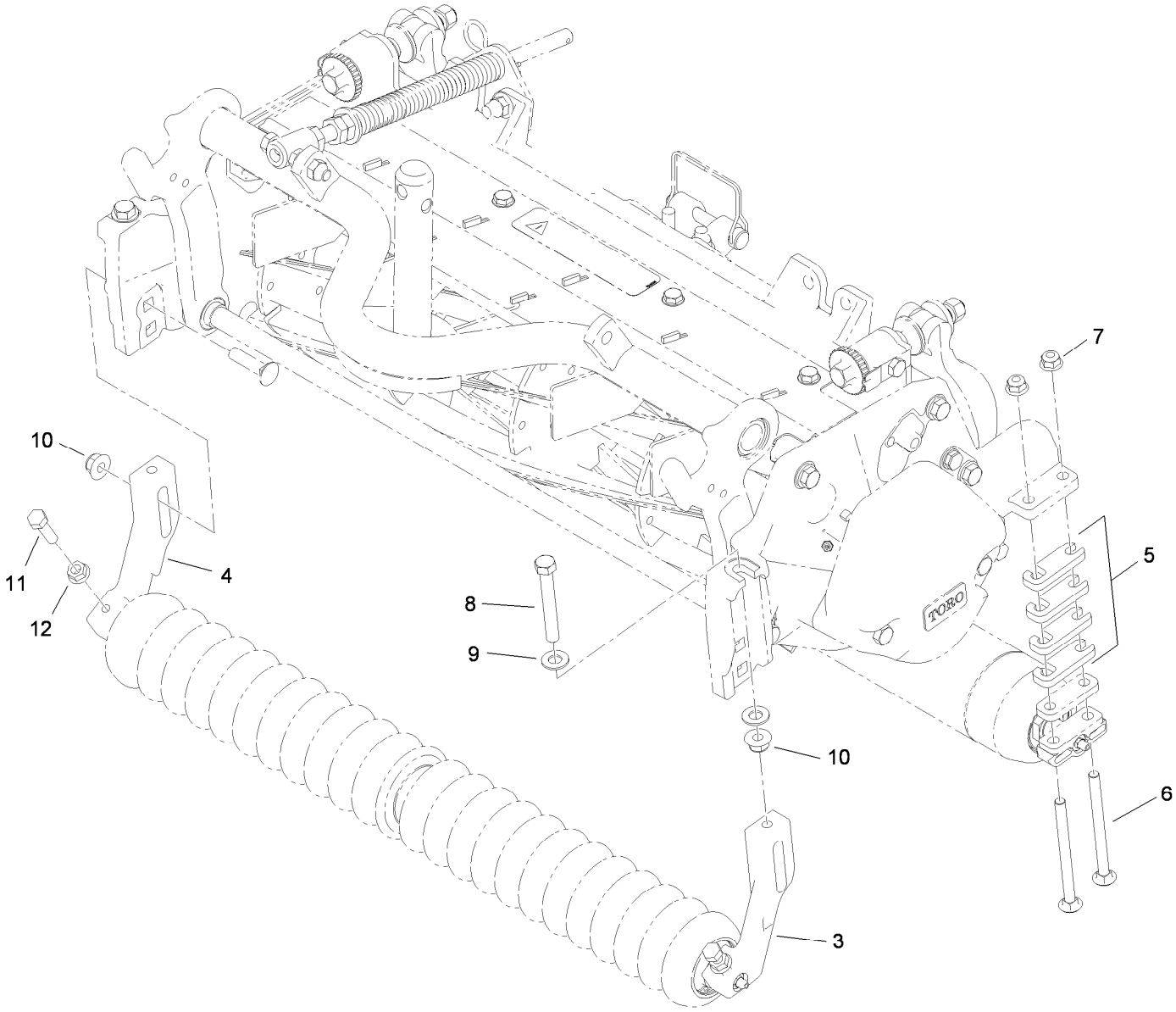

Optional High Height-of-Cut Assembly No. 110-9600

Ref.	*Part Number*	*Qty.*	*Description*
3	120-0404	1	Bracket-High HOC (LH)
4	120-0405	1	Bracket-High HOC (RH)
5	119-0626	8	Shim-Roller
6	106-9758	4	Screw-CARR
6	3230-30	4	Screw-CARR ●■
7	104-8300	4	Nut-HF, NI
8	112-7451	2	Screw-TAP
9	48-9220	4	Washer-Flat
10	104-8301	4	Nut-HF, NI
11	322-16	2	Screw-HH
12	32128-20	2	Nut-HF

● Not illustrated

■ Optional Equipment

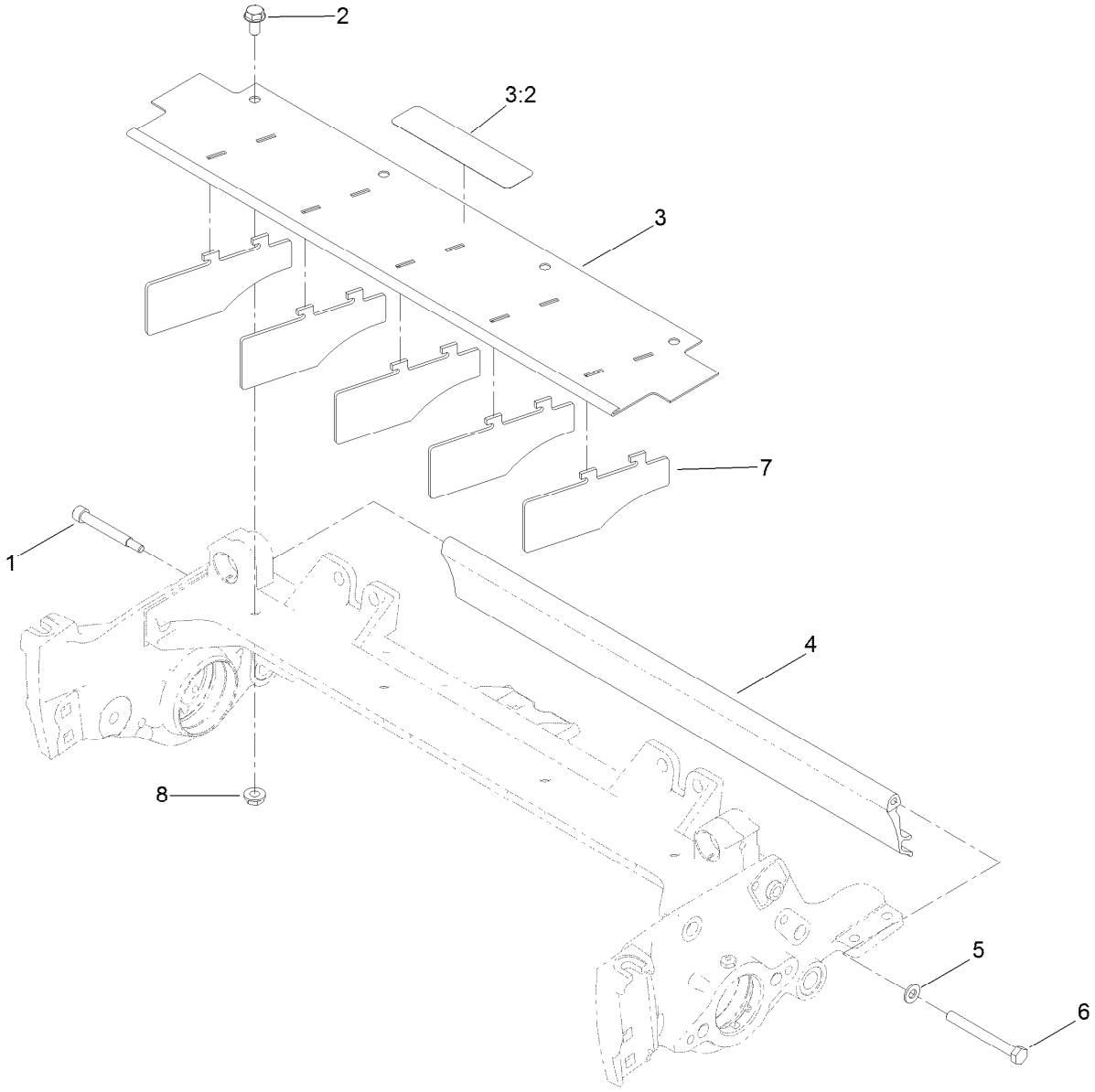

Shield Assembly

Ref.	*Part Number*	*Qty.*	*Description*
1	107-7773	1	Screw-HSH
2	3234-7	4	Screw-HHF
3	107-2996	1	Front Grass Shield ASM
3:2	93-6688	1	Decal-Danger
4	125-2098	1	Shield-Grass, Rear (5 Inch)
5	3256-74	1	Washer-Flat
6	322-14	1	Screw-HH
7	110-1706	5	Deflector ●
8	32128-20	4	Nut-HF

● Optional Equipment

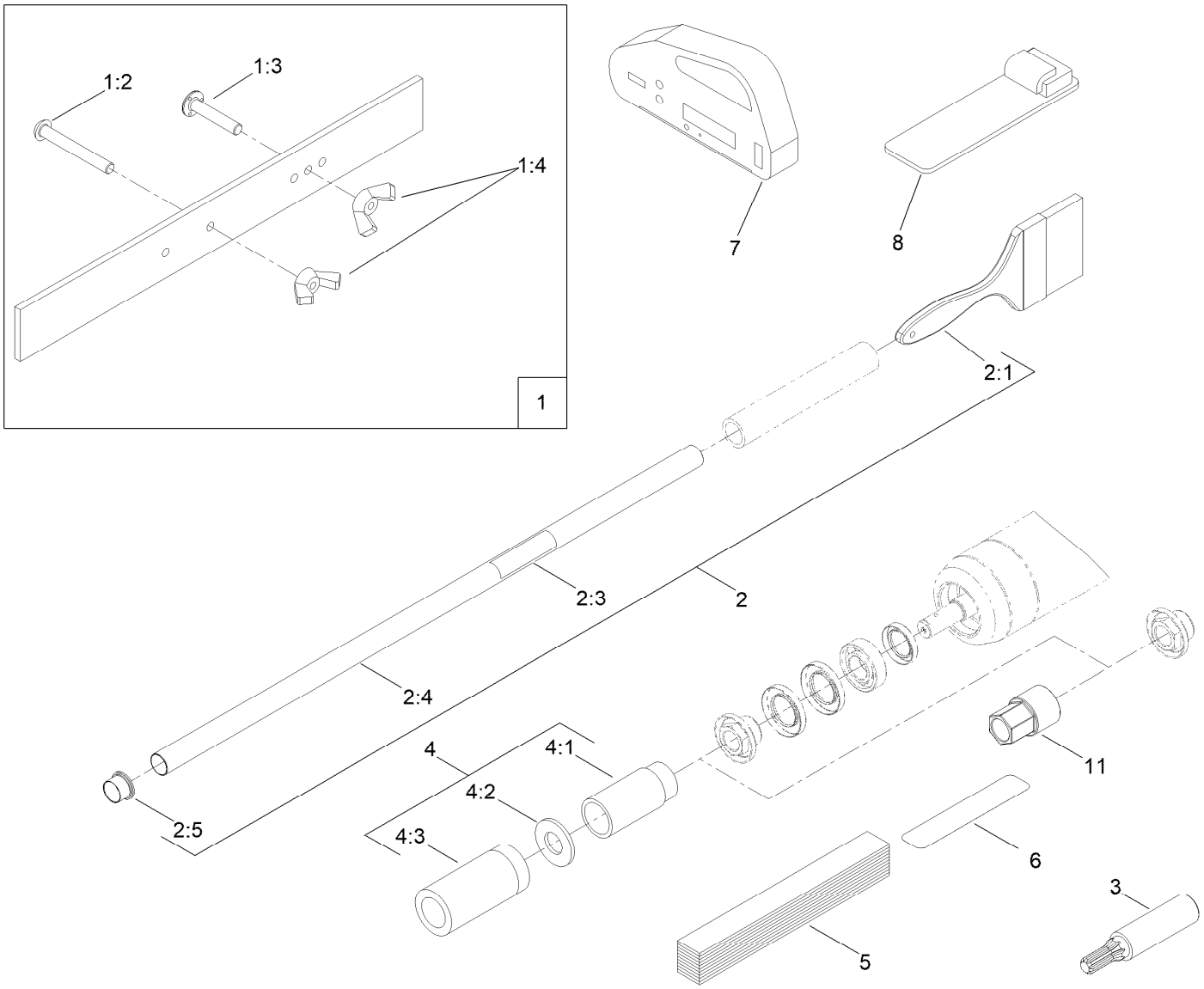

Optional Tool Assembly

Ref.	Part Number	Qty.	Description
1	108-6715	1	Gauge Bar ASM
1:2	32122-54	1	Screw-Head, Truss
1:3	108-6714	1	Stud-Weld
1:4	32103-3	2	Nut-Wing
2	29-9100	1	Brush And Handle ASM
2:1	36-4310	1	Brush
2:3	98-3206	1	Decal
2:4	29-9080	1	Handle
2:5	2410-18	1	Cap-Plastic
3	TOR4074	1	Adapter-Drive, Reel ■
4	115-0803	1	Rm/Gm Roller Rebuild Tool Kit

Ref.	Part Number	Qty.	Description
4:1	115-0852	1	Tool-Inner Seal
4:2	107-8133	1	Washer-Flat
4:3	115-0853	1	Tool-Bearing/Outer Seal
5	125-5610	1	Paper-Reel, Toro (10 Pack)
6	140-5531	1	Shim-Toro Reel (.002In)
7	131-6828	1	Indicator-Angle
8	131-6829	1	Mount-Indicator, Angle
9	137-0924	1	Tool-Hand TAP 7/8-16 (Rm DPA Reel) ●
10	137-0925	1	Tool-Hand TAP 7/8-16, LH (Rm DPA Reel) ●
11	147-1132	1	Tool-Drive, Roller Nut

● Not illustrated
■ Obtain directly from K-Line Industries, Inc. (https://klineind.com)

Attachments and Accessories

For 03488 22in 11-Blade DPA Cutting Unit Reelmaster 3550 or 3555 Series Traction Unit

Product Name	Model/Part
22in Fairway Compact Grass Basket Kit	03416
Weight Kit for 8-Blade or 11-Blade DPA Cutting Unit with 5 Inch Reel	03484
Rear Roller Brush (3-18 Inch, 2-22 Inch) Kit	03918
3in Dia Collar Kit	104-8215
Wiehle Scraper ASM	107-2993-03
Rear Roller Scraper Kit	107-3280
Gauge Bar Assembly	108-6715
Bedknife-Edgemax (Fairway)	108-9095
Bedknife-STD (Fairway)	108-9096
Comb/Scraper Kit	110-1735
Brush-Roller (High Height-Of-Cut)	110-1740
Bedknife-HD (Fairway)	110-4074
Bedknife-Low HOC (Fairway)	110-4084
High Height-of-Cut Kit	110-9600
3in Full Front Roller Scraper	110-9602-03
Shoulder Roller Scraper ASM	110-9609-03
2.5 Inch Dia Roller Asm (Long)	114-5404
3in Dia Full Front Roller ASM	114-5412
Plastic Shoulder Roller ASM	114-5421
Roller Rebuild Kit	114-5430
Roller Rebuild Tool Kit	115-0803
Bedknife Edgemax Low cut Extended (Fairway)	119-4280
Cutting Unit Kickstand	119-8010-03
Bedknife-Lowcut Extended (Fairway)	120-1640
Heavy-Duty DPA MVP Kit	120-7230
Rear Roller Adjustment Kit	125-0570
Toro Reel Paper (10 Pack)	125-5610
Toro Reel Shim (0.002in)	125-5611
Bedknife-Edgemax Lowcut	127-7132
5 Inch Aggresive Bedbar	131-3220-03
Groomer/RRB Seal Kit	131-3233
Angle Indicator	131-6828
Angle Indicator Mount	131-6829
Edge Series 5 Inch Fairway Reel Asm	132-7112
Reel Drive Adapter (Obtain directly from K-Line Industries, Inc. (800) 241-0936)	TOR4112

Notes:



Count on it.