Form No. 3437-844 Rev B

TORO®

Count on it.

Parts Catalog

22-inch 11-Blade EdgeSeries™ Forward Swept Reel DPA Cutting Unit

Reelmaster® 3550 or 3555 Traction Unit

Model No. 03488—Serial No. 405700000 and Up

Register at www.Toro.com.
Original Instructions (EN)

CE

3437-844 B

Ordering Replacement Parts

To order replacement parts, please supply the part number, the quantity, and the description of each part desired.

Understanding Reference Numbers

Each identified part in an illustration has a reference number. The reference number for a part also appears in the parts list, along with other information about the part.

This catalog uses two special reference number formats, one to indicate parts in a service assembly and another to indicate the quantity of a given part in an illustration.

Service Assembly Reference Numbers

Parts in service assemblies have reference numbers in the form a:b. The a represents the reference number of the entire service assembly and the b represents a sequential number unique to each part within the service assembly.

For example, a wheel assembly might be identified by reference number 6, the tire by 6:1, the valve by 6:2, and the wheel by 6:3. When you order the assembly identified by reference number 6, you receive all parts identified by reference numbers 6:1,6:2, and 6:3. However, you may also order any part individually. Reference numbers of this type appear in illustration and in parts lists.

Reference Numbers Indicating Quantity

In an illustration, if a reference number indicates more than one part, the reference number has the form nX y. The n represents the quantity of the part, the X is the multiplication symbol, and the y represents the reference number.

For example, in an illustration, the reference number 2X 37 means that two of the parts identified by reference number 37 are indicated.

Contents

Frame Assembly 4
Reel and Bedbar Assembly 6
5in EdgeSeries + 22in Fairway, 11 Blade, Low Drag, Forward Swept Reel Assembly No. 137-8427 8
Optional EdgeSeries+ 22in Fairway, 11 Blade, Low Drag, Radial Reel Assembly No. 137-8429 9
Roller Assembly 10
Short Roller Assembly No. 114-5406 11
Optional Long Roller Assembly No. 137-6107 12
Plastic Wiehle Roller Assembly No. 114-5400 13
Optional Plastic Shoulder Roller Assembly No. 114-5421 14
Optional Full Front Roller Assembly No. 137-6111 15
Optional High Height-of-Cut Assembly No. 137-0890 16
Shield Assembly 17
Optional Tool Assembly 18
Attachments and Accessories 19

© 2024—The Toro® Company
8111 Lyndale Avenue South
Bloomington, MN 55420

Contact us at www.Toro.com.
Printed in the USA.
All Rights Reserved

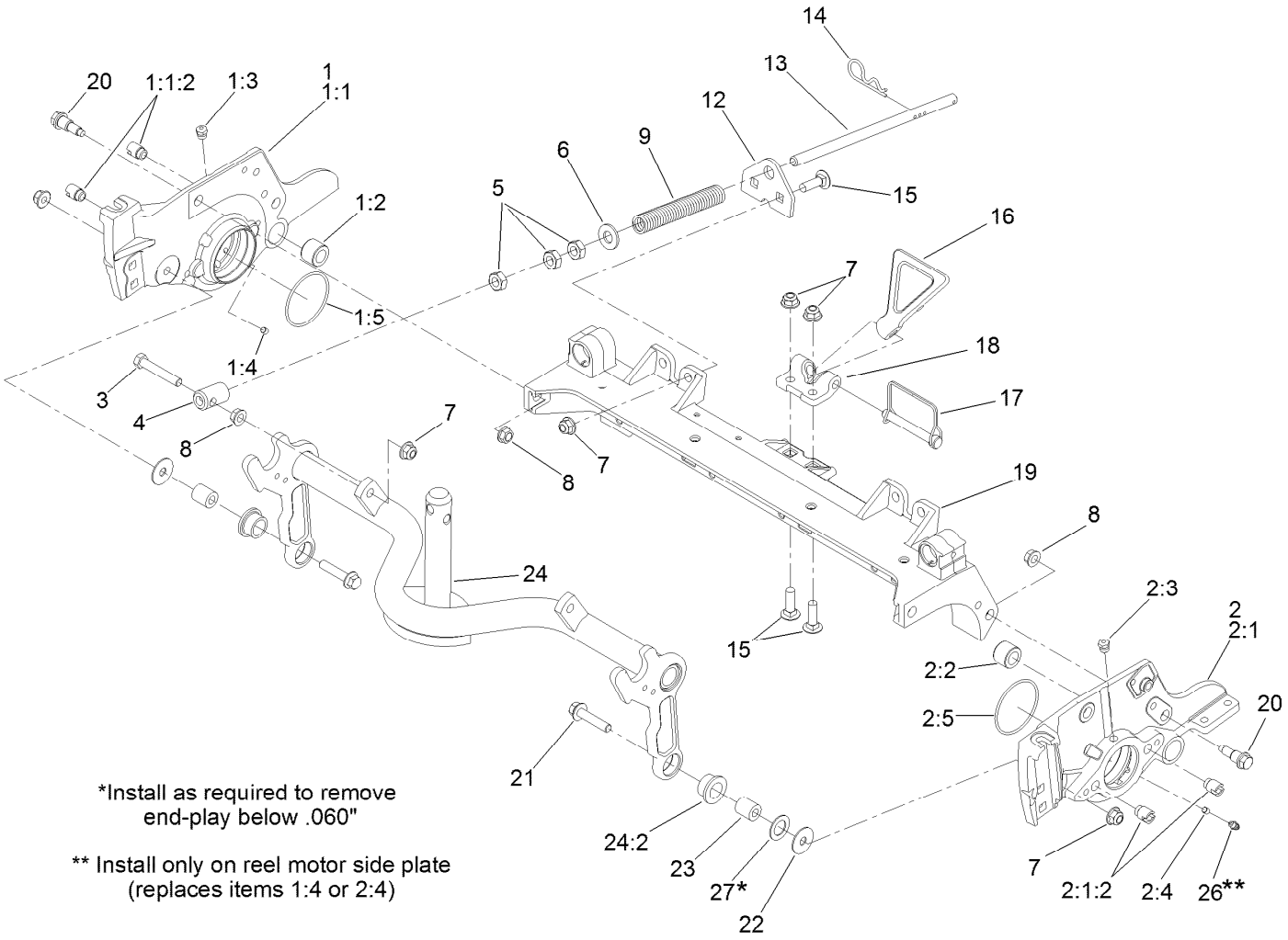

Frame Assembly

Ref.	Part Number	Qty.	Description
1	127-0287	1	5 Inch RH Side Plate ASM
1:1		1	5 Inch RH Side Plate Sub ASM ■
1:1:2	127-7149	2	Insert-Threaded, Side Plate
1:2	106-9618	1	Bushing-Rubber
1:3	302-39	1	Fitting-Plug
1:4	3245-35	1	Screw-Set, HSH
1:5	117-8177	1	O-Ring
2	127-0285	1	5 Inch LH Side Plate ASM
2:1		1	5 Inch LH Side Plate Sub ASM ■
2:1:2	127-7149	2	Insert-Threaded, Side Plate
2:2	106-9618	1	Bushing-Rubber
2:3	302-39	1	Fitting-Plug
2:4	3245-35	1	Screw-Set, HSH
2:5	117-8177	1	O-Ring
3	104-3396	1	Screw-HH
4	99-8662	1	Tube-Spring

Ref.	Part Number	Qty.	Description
5	3218-5	3	Nut-Jam
6	87-7270	1	Washer-Thrust
7	104-8301	7	Nut-HF, NI
8	3290-357	5	Nut-HSF
9	112-1725	1	Spring-Compression
12	110-4069	1	Bracket
13	107-2970	1	Rod
14	92-2762	1	Pin-Hair
15	3231-25	4	Bolt-CARR
16	119-8010-03	1	Kickstand ●
17	107-7400	1	Pin-Lynch
18	110-4058	1	Bracket-Chain
19	107-2951	1	Frame
20	107-2979	4	Bolt-Shoulder
21	3234-19	2	Screw-HHF
22	130-8094	2	Washer-Plain
23	108-4279	2	Spacer-Frame
24	131-4714	1	Carrier Frame ASM

● Optional Equipment

■ Not serviced separately

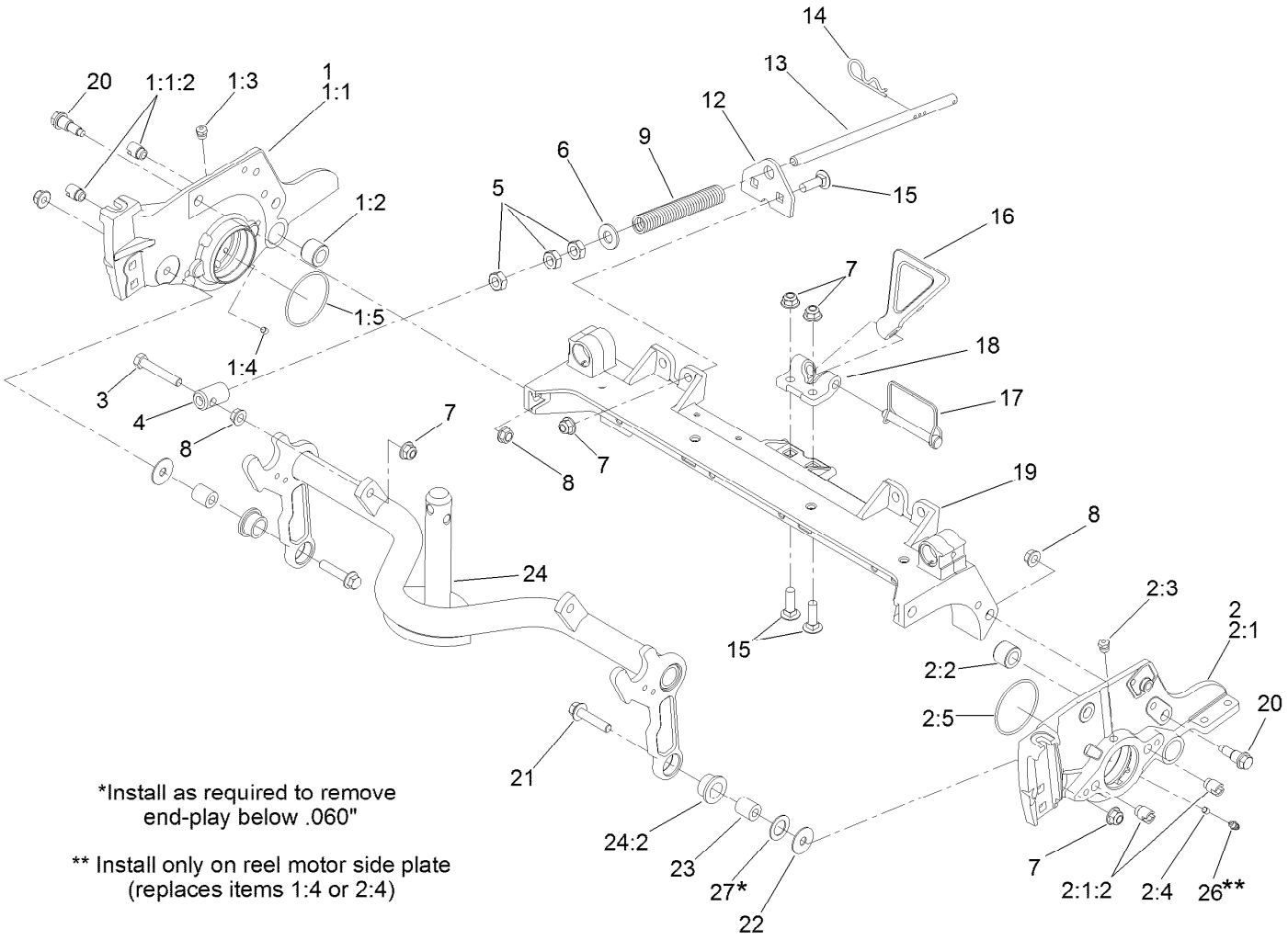

Frame Assembly (continued)

Ref.	Part Number	Qty.	Description
24:2	93-2877	2	Bushing

Ref.	Part Number	Qty.	Description
26	302-5	1	Fitting-Grease
27	67-9410	1	Washer

● Optional Equipment

■ Not serviced separately

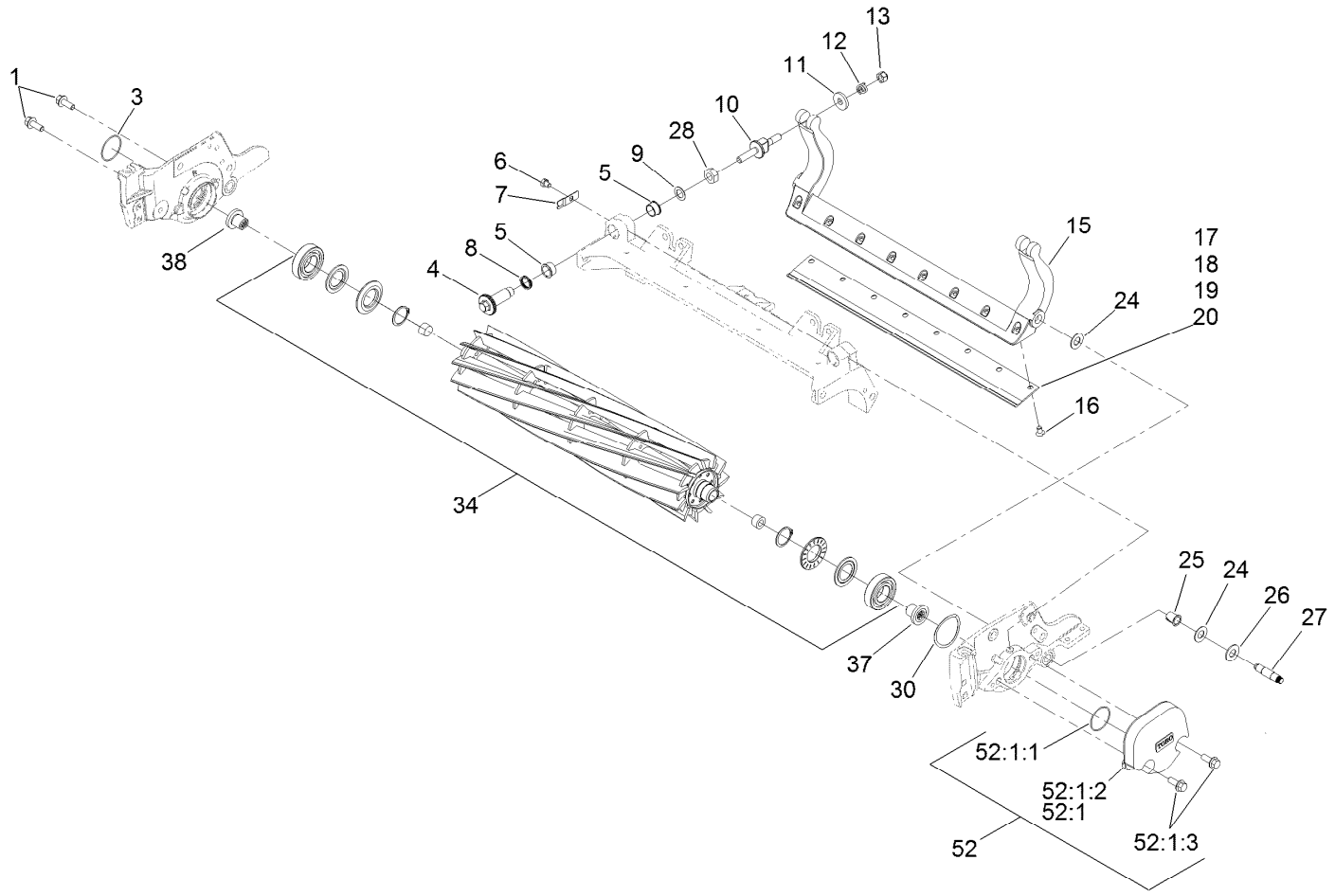

Reel and Bedbar Assembly

Ref.	Part Number	Qty.	Description
1	3234-11	2	Screw-HHF
3	237-68	1	O-Ring
4	120-5118	2	Shaft-Adjuster
5	106-5344	4	Bushing-Flange, Keyed
6	119-4067	2	Screw-HH
7	99-2097	2	Detent
8	120-5116	2	Washer-Wave
9	108-0015	2	Washer-Flat
10	137-6130	2	Screw-Adjuster, Bedbar
11	119-4155	2	Washer-Hardened
12	120-5120	2	Spring-Compression
13	119-4039	2	Nut-Hex
15	105-8095-01	1	Bedbar-Fairway
15	131-3220-0P	1	Bedbar-Aggresive, 5In ●■
16	119-4151	8	Screw-Bedknife
17	137-0833	1	Bedknife-Edgemax (Fairway) ●■
18	108-9096	1	Bedknife-STD (Fairway) ●■
19	137-0832	1	Bedknife-Edgemax Lowcut
20	110-4084	1	Bedknife-Low HOC (Fairway) ●■
24	61-1950	4	Washer-Plastic
25	56-9520	2	Bushing-Flanged
26	131-4715	2	Washer
27	106-9623	2	Bolt-Bedbar
28	3296-33	4	Nut-Lock, NI
30	115-5258	1	Spring-Wire, Flat
34	137-8427	1	ES Reel+,5In Fwy(22)11 Bld LD(Fsr)
34	137-8429	1	ES Reel+,5In Fwy(22)11 Bld LD(Rr) ■
37	130-0064	1	Insert-Threaded, 5 Inch (LH)
38	130-0063	1	Insert-Threaded, 5 Inch (RH)
45	120-7230	1	Rm HD DPA MVP Kit ●■

● Not illustrated
▲ Not serviced separately

■ Optional Equipment

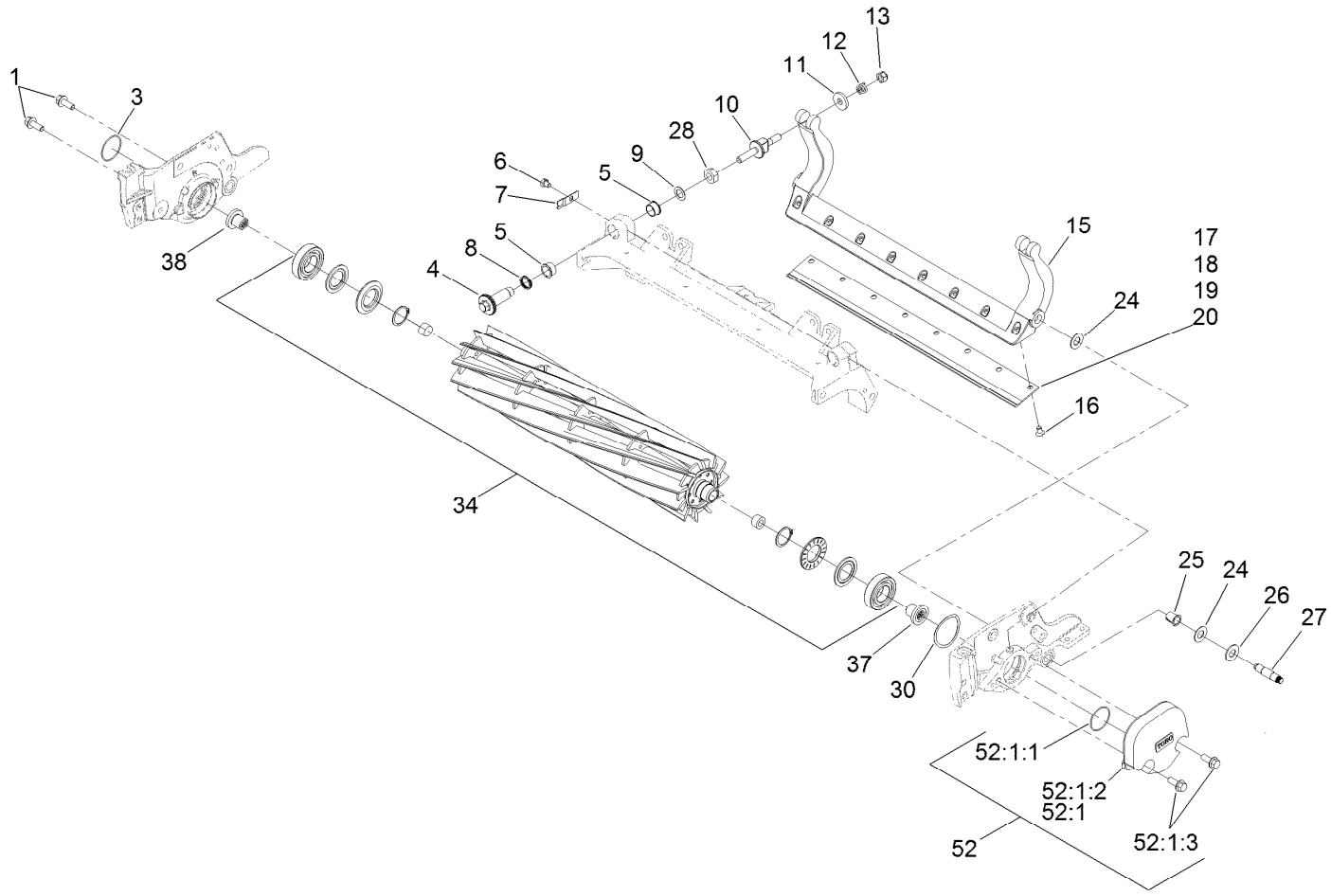

Reel and Bedbar Assembly (continued)

Ref.	Part Number	Qty.	Description
52	03484	1	5 Inch Weight-Cu (W/O Attach) ■
52:1		1	Cutting Unit Weight Kit ▲

Ref.	Part Number	Qty.	Description
52:1:1	237-68	5	O-Ring
52:1:2	125-2779-01	5	Weight-End, 5 Inch
52:1:3	3234-11	10	Screw-HHF

● Not illustrated
▲ Not serviced separately

■ Optional Equipment

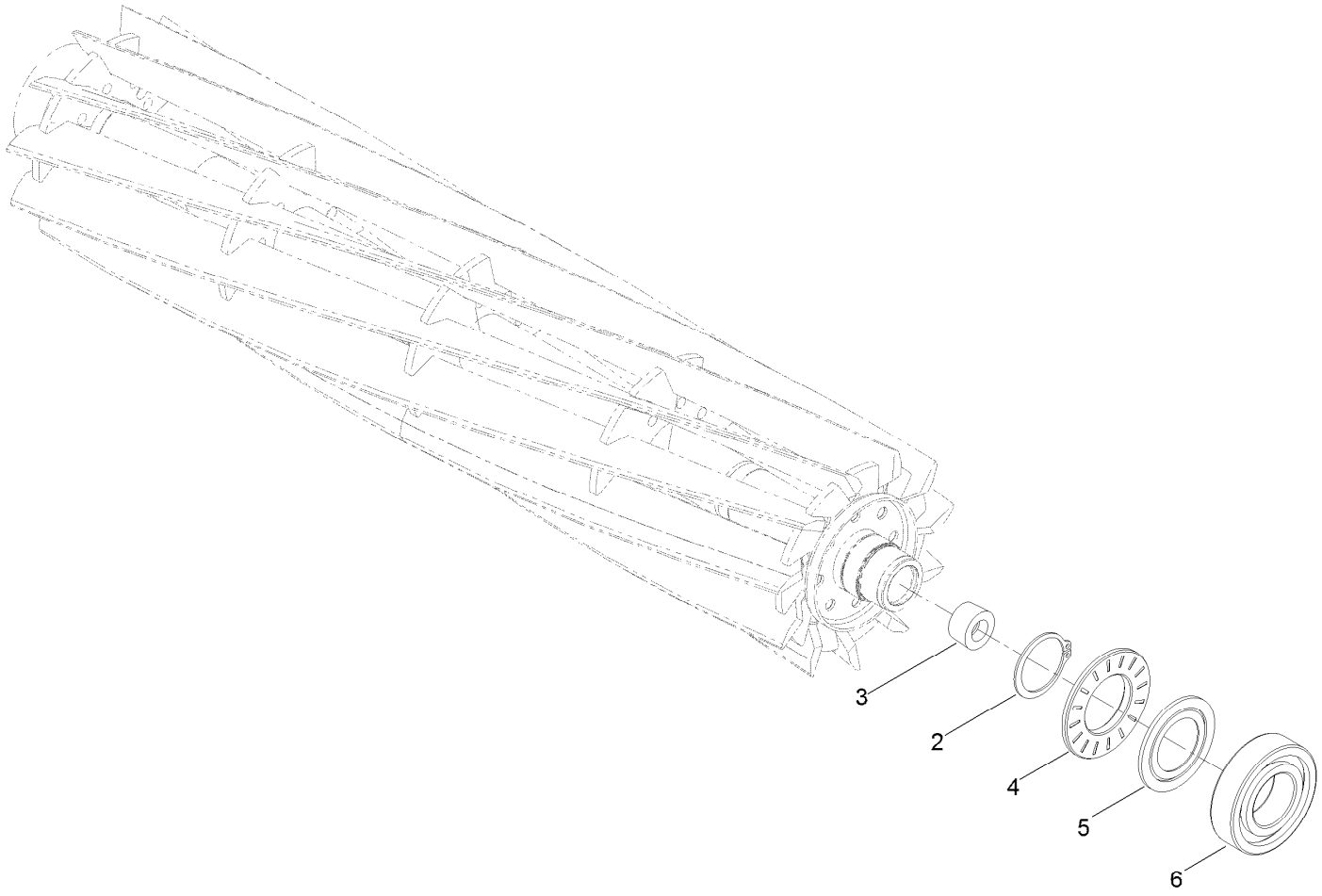

5in EdgeSeries + 22in Fairway, 11 Blade, Low Drag, Forward Swept Reel Assembly No. 137-8427

Ref.	*Part Number*	*Qty.*	*Description*
2	92-2601	2	Ring-Retaining
3	127-7118	2	Plug-Shaft, Reel
4	127-4284	2	Washer-Special
5	115-3299	2	Seal-Flocked
6	115-3296	2	Bearing-Sealed

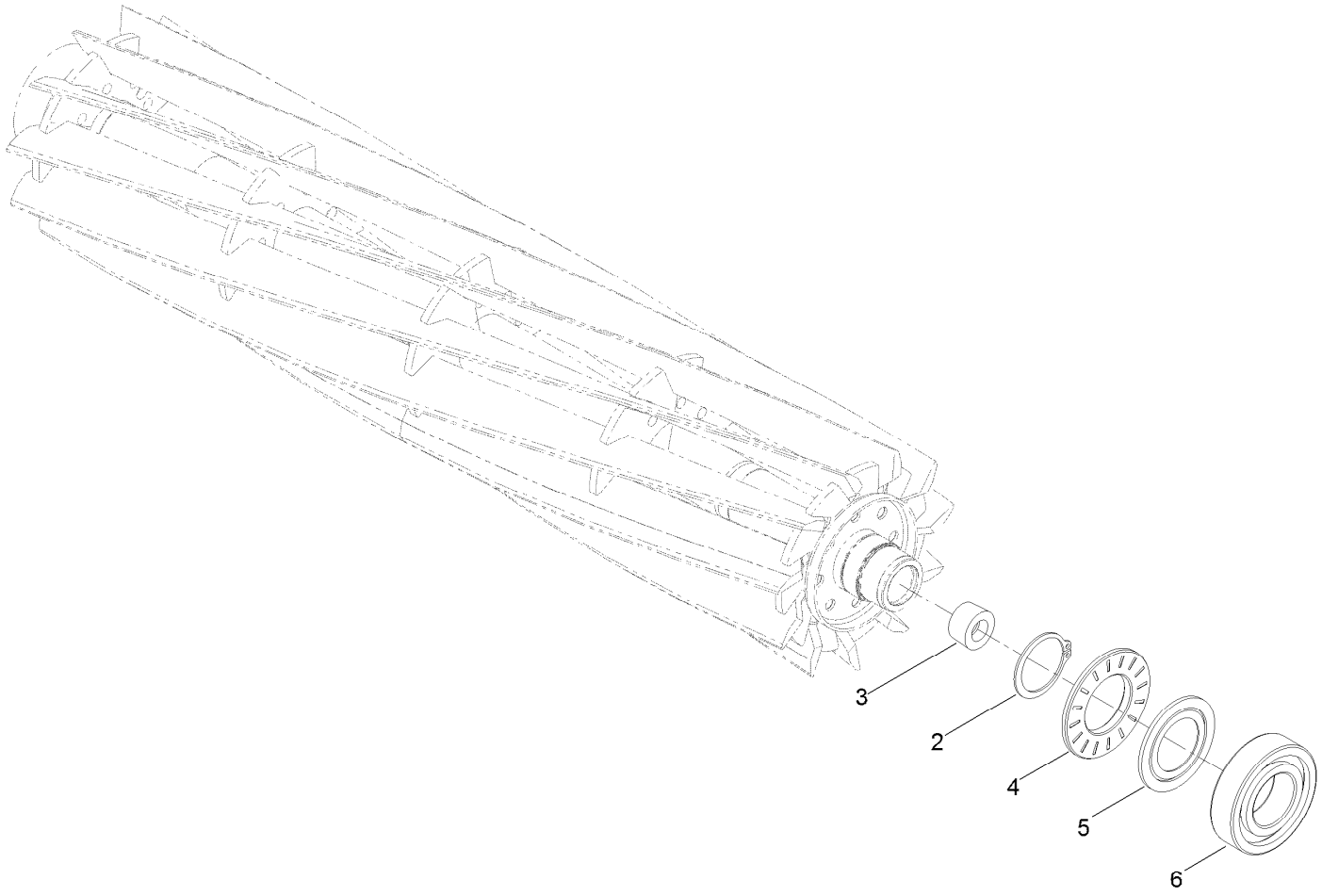

Optional EdgeSeries+ 22in Fairway, 11 Blade, Low Drag, Radial Reel Assembly No. 137-8429

Ref.	*Part Number*	*Qty.*	*Description*
2	92-2601	2	Ring-Retaining
3	127-7118	2	Plug-Shaft, Reel
4	127-4284	2	Washer-Special
5	115-3299	2	Seal-Flocked
6	115-3296	2	Bearing-Sealed

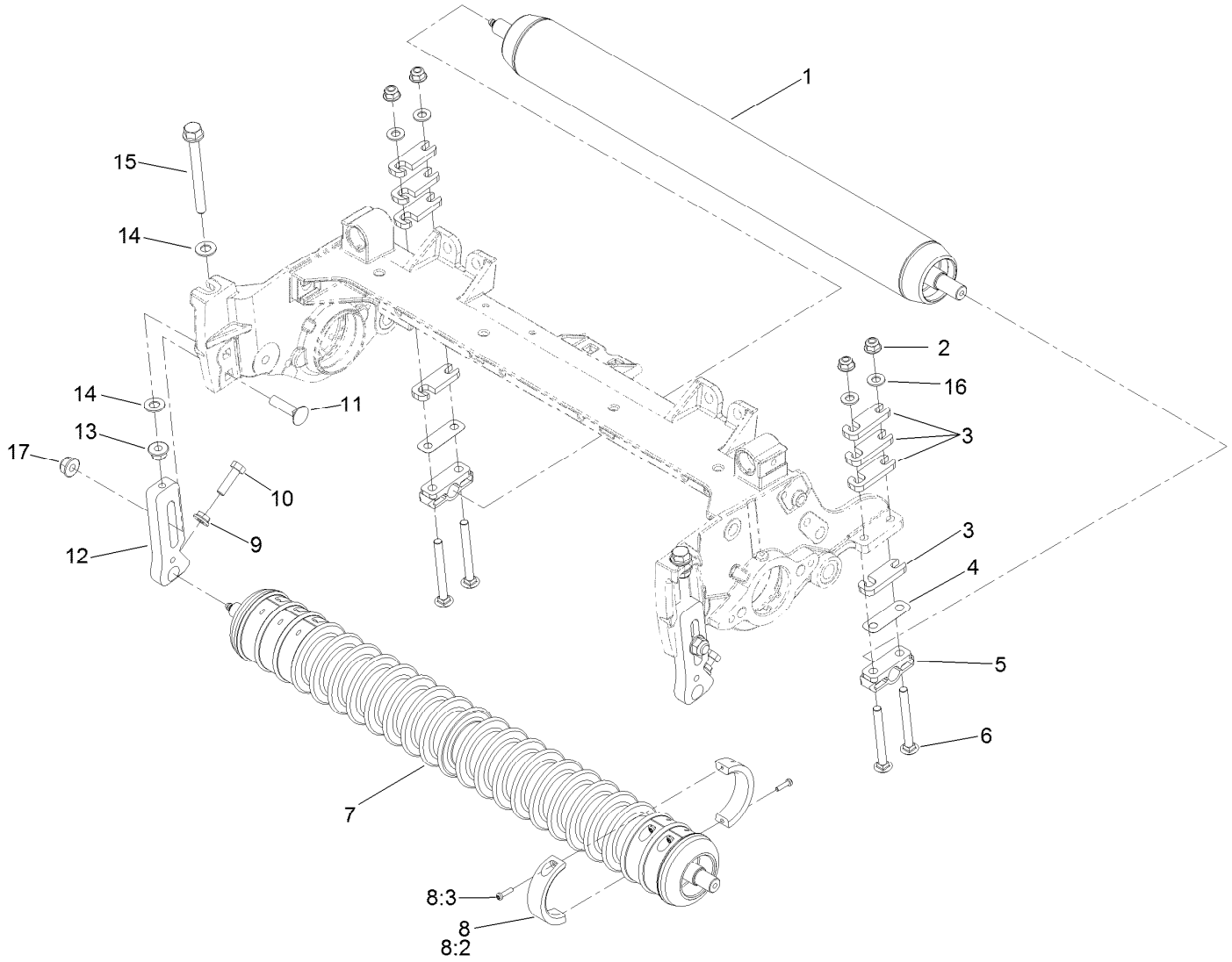

Roller Assembly

Ref.	Part Number	Qty.	Description
1	114-5406	1	2.5In DIA Short Rear Roller ASM
1	137-6107	1	Long Rear Roller ASM (2.5In DIA)(22In) ●■
2	104-8300	4	Nut-HF, NI
3	119-0626	4	Shim-Roller
4	107-4001	2	Shim-Roller (0.01 Inch) ■
5	106-3924	2	Bracket-Roller, Rear
6	3230-7	4	Bolt-CARR
7	114-5400	1	Plastic Wiehle Roller ASM
7	114-5421	1	Plastic Shoulder Roller ASM ●■
7	137-6111	1	Full Front Roller ASM (3In DIA)(22In) ●■
8	104-8215	6	Collar Kit ■
8:2	100-4959	2	Collar
8:3	104-1835	2	Screw
9	32128-20	2	Nut-HF
10	322-16	2	Screw-HH
11	3231-4	2	Screw-CARR
12	125-2796	2	Bracket-Front HOC
13	104-8301	2	Nut-HF, NI
14	48-9220	4	Washer-Flat
15	133-7571	2	Screw-HOC, Fairway
16	94-6936	4	Washer-Hardened
17	133-7570	2	Nut-Flange, NI
50	137-0890	1	Rm DPA High HOC Kit (F18 & Up) ●■

● Not illustrated

■ Optional Equipment

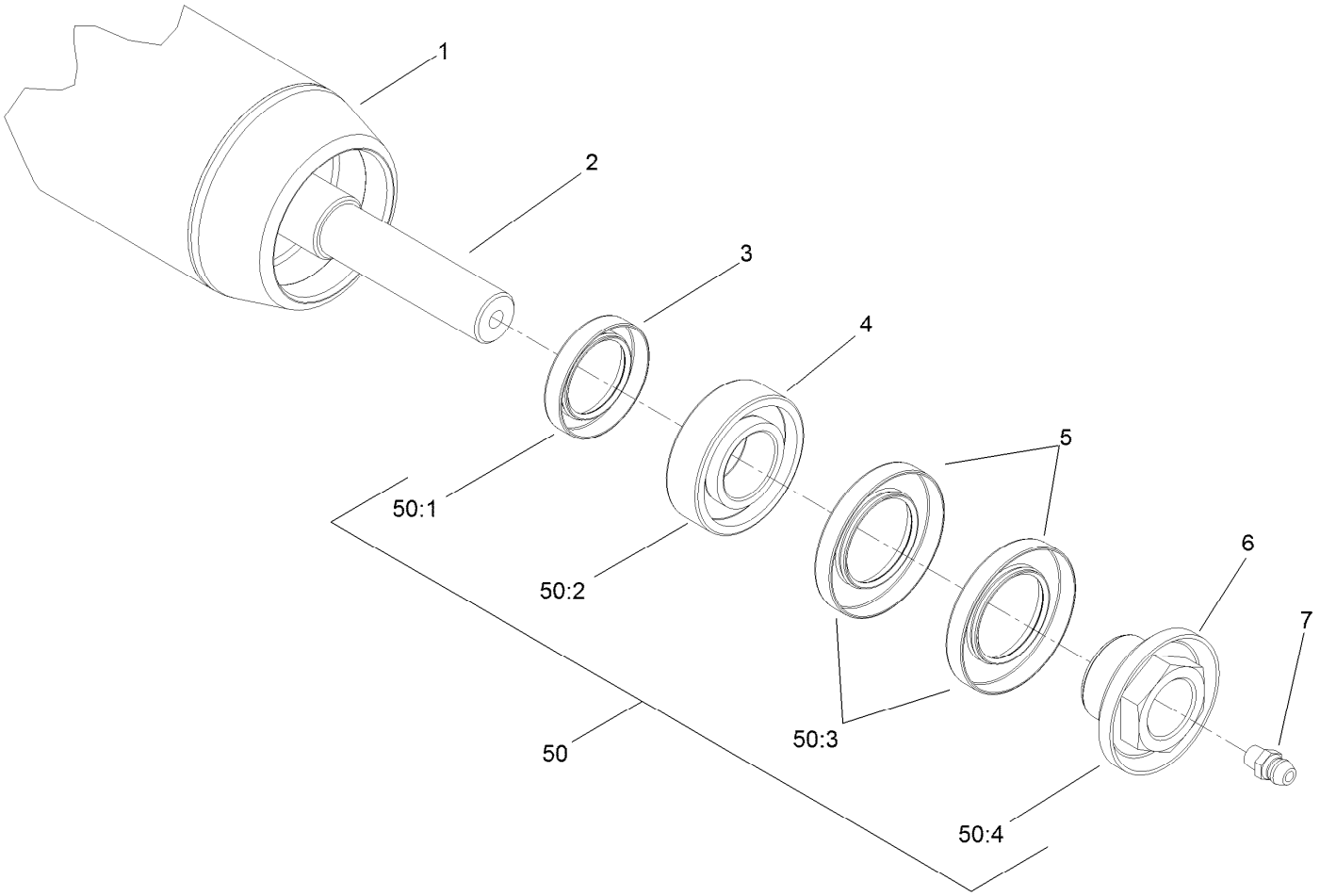

Short Roller Assembly No. 114-5406

Ref.	*Part Number*	*Qty.*	*Description*
1	115-8293-0P	1	Tube-Short
2	114-5410	1	Shaft-Short, Rear Roller
3	114-3717	2	Seal-Oil
4	112-5290	2	Bearing-Steel, Stainless
5	112-7494	4	Seal
6	114-5411	2	Nut-Lock, Bearing
7	302-5	2	Fitting-Grease
50	114-5430	1	Roller Rebuild Kit ●
50:1	114-3717	2	Seal-Oil
50:2	112-5290	2	Bearing-Steel, Stainless
50:3	112-7494	4	Seal
50:4	114-3745	2	Nut-Lock, Bearing

● Optional Equipment

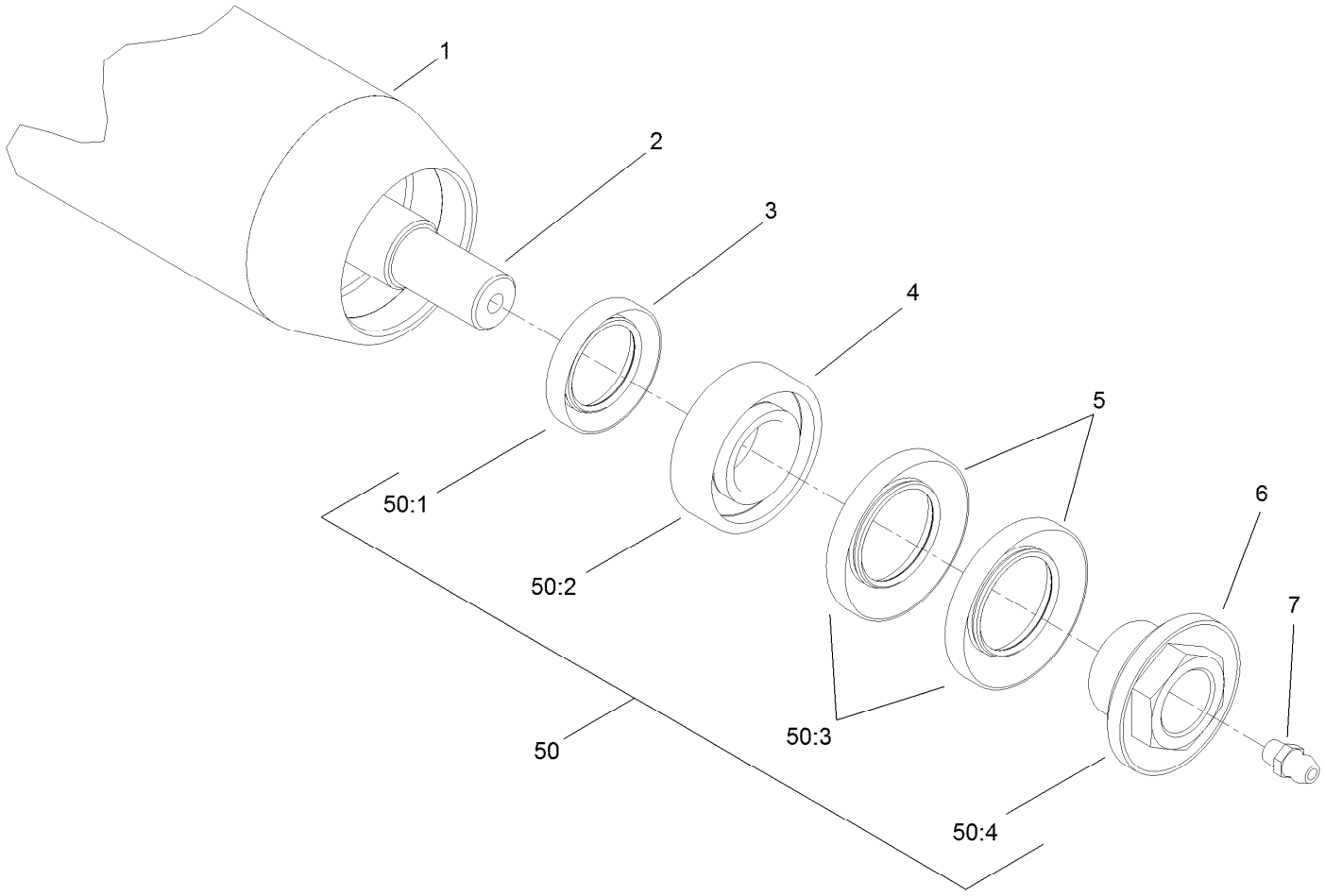

Optional Long Roller Assembly No. 137-6107

Ref.	*Part Number*	*Qty.*	*Description*
1	137-6106	1	Tube Roller 2.5In DIA X 23In
2	114-5407	1	Shaft-Long, Rear Roller
3	114-3717	2	Seal-Oil
4	112-5290	2	Bearing-Steel, Stainless
5	112-7494	4	Seal
6	114-5411	2	Nut-Lock, Bearing
7	302-5	2	Fitting-Grease
50	114-5430	1	Roller Rebuild Kit ●
50:1	114-3717	2	Seal-Oil
50:2	112-5290	2	Bearing-Steel, Stainless
50:3	112-7494	4	Seal
50:4	114-3745	2	Nut-Lock, Bearing

● Optional Equipment

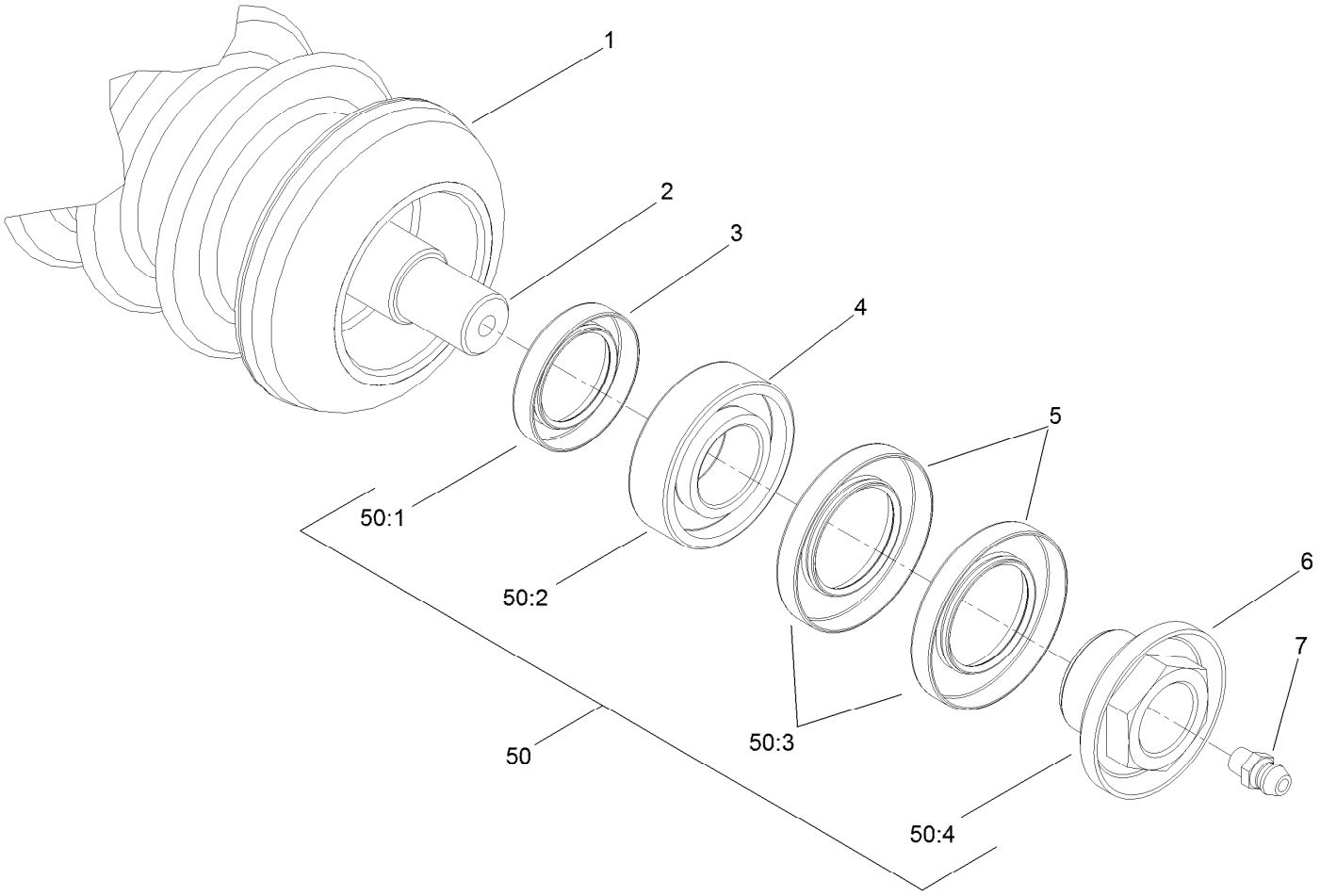

Plastic Wiehle Roller Assembly No. 114-5400

Ref.	*Part Number*	*Qty.*	*Description*
1	114-5401	1	Wiehle Roller Plastic (22In)
2	114-5403	1	Shaft-Roller, Front
3	114-3717	2	Seal-Oil
4	112-5290	2	Bearing-Steel, Stainless
5	112-7494	4	Seal
6	114-5411	2	Nut-Lock, Bearing
7	302-5	2	Fitting-Grease
50	114-5430	1	Roller Rebuild Kit ●
50:1	114-3717	2	Seal-Oil
50:2	112-5290	2	Bearing-Steel, Stainless
50:3	112-7494	4	Seal
50:4	114-3745	2	Nut-Lock, Bearing

● Optional Equipment

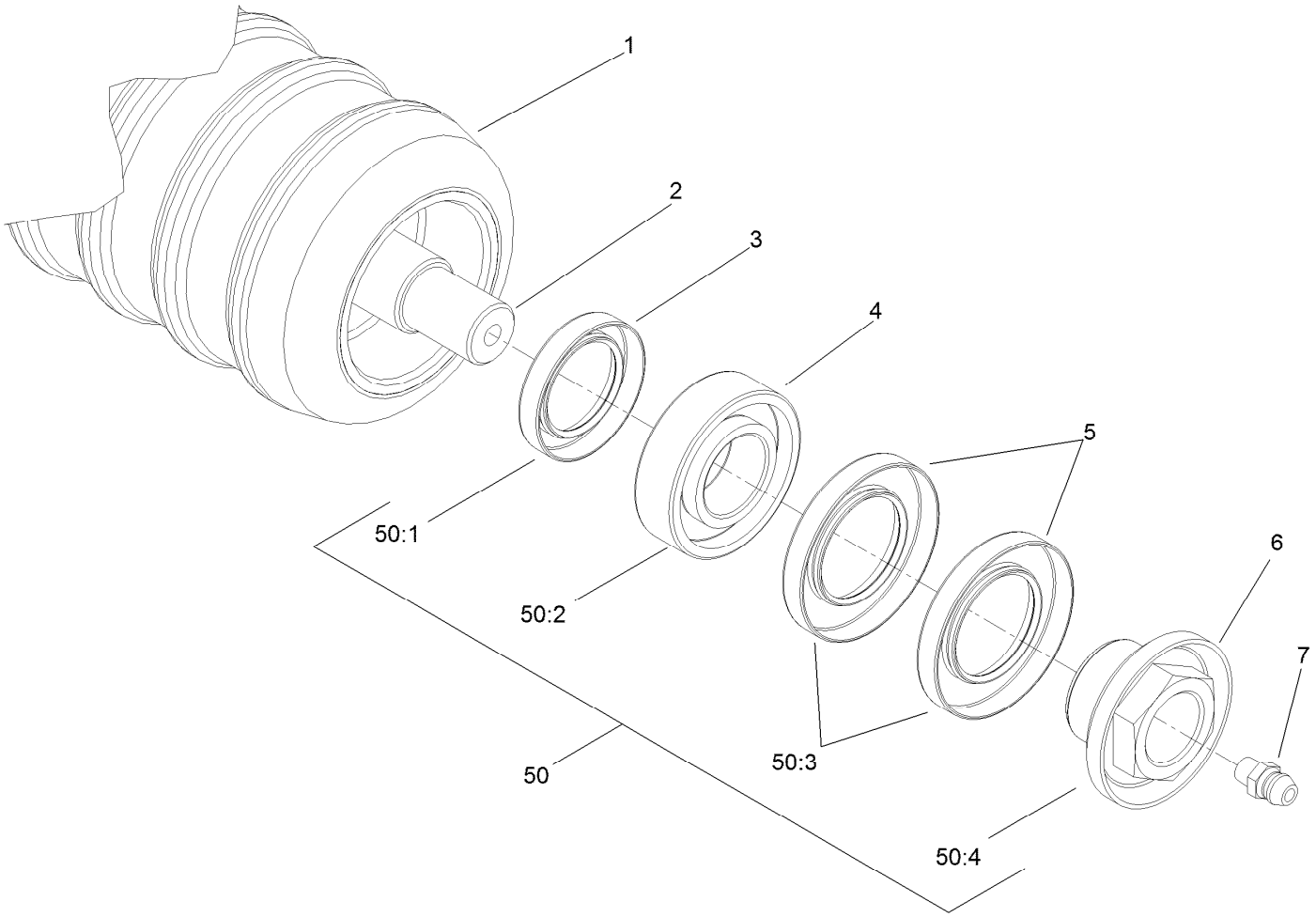

Optional Plastic Shoulder Roller Assembly No. 114-5421

Ref.	*Part Number*	*Qty.*	*Description*
1	114-5422	1	Roller-Shoulder, Plastic
2	114-5403	1	Shaft-Roller, Front
3	114-3717	2	Seal-Oil
4	112-5290	2	Bearing-Steel, Stainless
5	112-7494	4	Seal
6	114-5411	2	Nut-Lock, Bearing
7	302-5	2	Fitting-Grease
50	114-5430	1	Roller Rebuild Kit ●
50:1	114-3717	2	Seal-Oil
50:2	112-5290	2	Bearing-Steel, Stainless
50:3	112-7494	4	Seal
50:4	114-3745	2	Nut-Lock, Bearing

● Optional Equipment

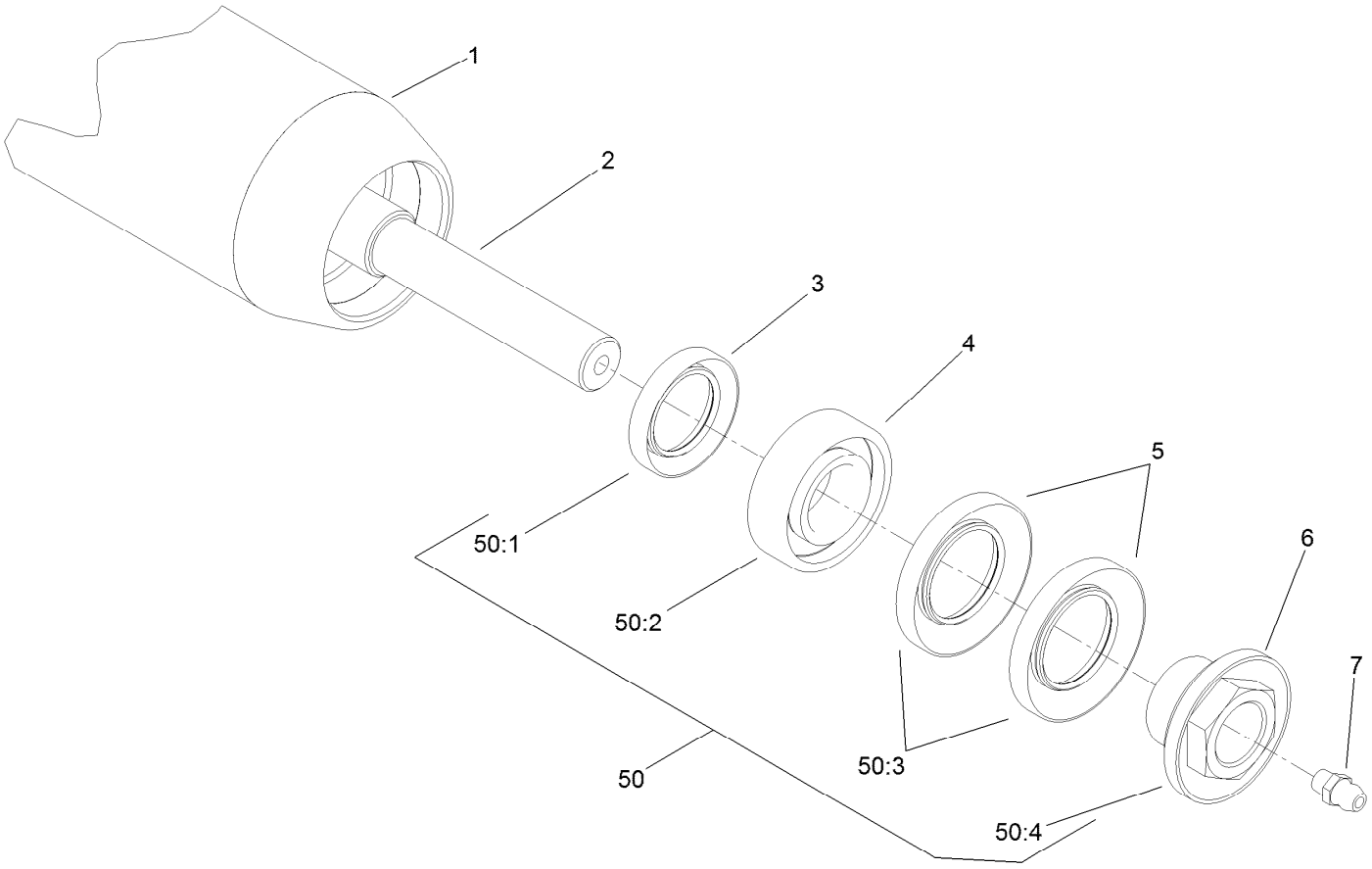

Optional Full Front Roller Assembly No. 137-6111

Ref.	*Part Number*	*Qty.*	*Description*
1	137-6110	1	Tube Roller 3.0In DIA X 24.5In
2	114-5403	1	Shaft-Roller, Front
3	114-3717	2	Seal-Oil
4	112-5290	2	Bearing-Steel, Stainless
5	112-7494	4	Seal
6	114-5411	2	Nut-Lock, Bearing
7	302-5	2	Fitting-Grease
50	114-5430	1	Roller Rebuild Kit ●
50:1	114-3717	2	Seal-Oil
50:2	112-5290	2	Bearing-Steel, Stainless
50:3	112-7494	4	Seal
50:4	114-3745	2	Nut-Lock, Bearing

● Optional Equipment

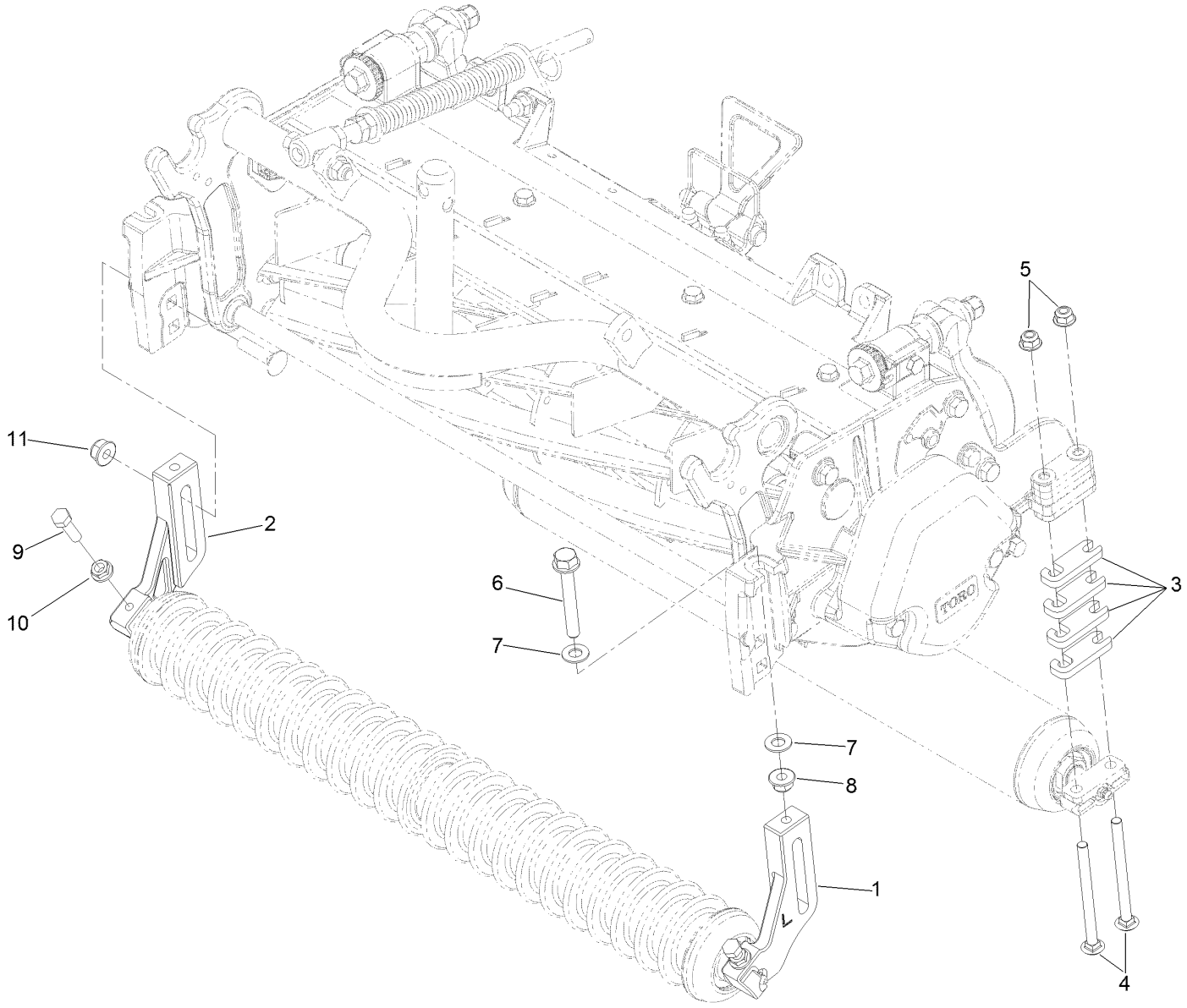

Optional High Height-of-Cut Assembly No. 137-0890

Ref.	*Part Number*	*Qty.*	*Description*
1	120-0404	1	Bracket-High HOC (LH)
2	120-0405	1	Bracket-High HOC (RH)
3	119-0626	8	Shim-Roller
4	106-9758	4	Screw-CARR
4	3230-30	4	Screw-CARR
5	104-8300	4	Nut-HF, NI
6	133-7572	2	Screw-HOC
7	48-9220	4	Washer-Flat
8	104-8301	4	Nut-HF, NI
9	322-16	2	Screw-HH
10	32128-20	2	Nut-HF
11	133-7570	2	Nut-Flange, NI

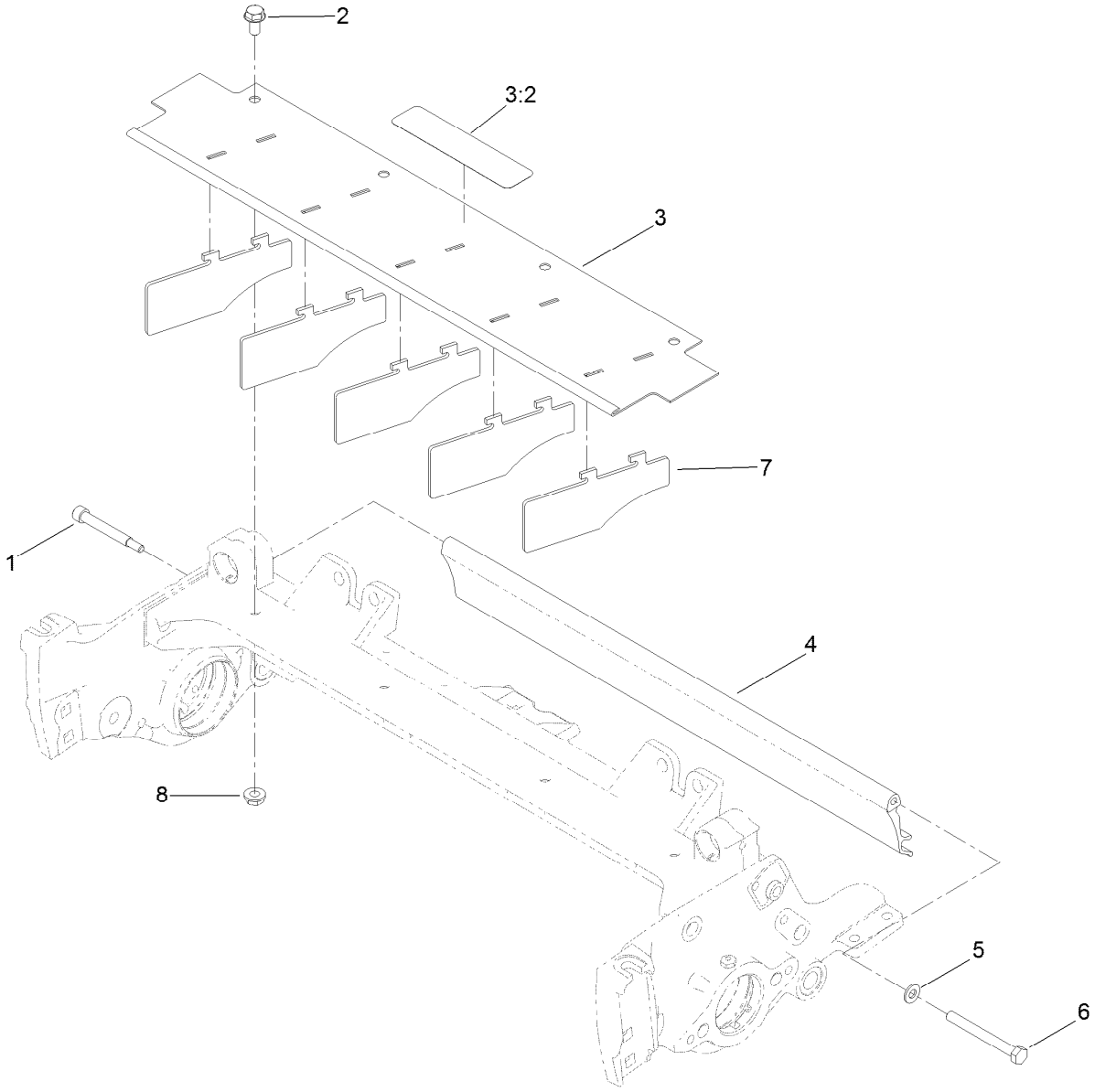

Shield Assembly

Ref.	*Part Number*	*Qty.*	*Description*
1	107-7773	1	Screw-HSH
2	3234-7	4	Screw-HHF
3	107-2996	1	Front Grass Shield ASM
3:2	137-9706	1	Decal-Warning
4	125-2098	1	Shield-Grass, Rear (5 Inch)
5	3256-74	1	Washer-Flat
6	322-14	1	Screw-HH
7	110-1706	5	Deflector
8	32128-20	4	Nut-HF

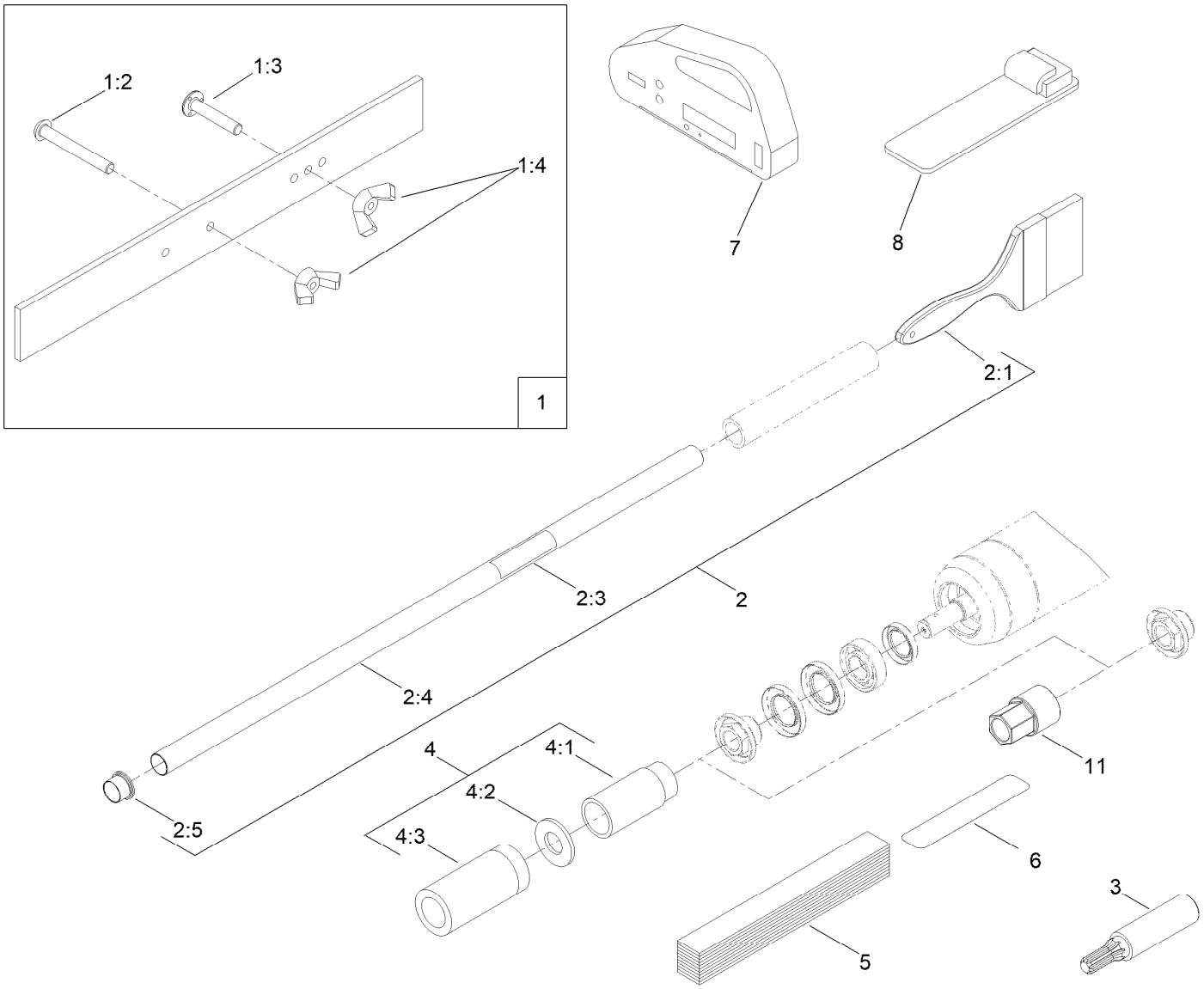

Optional Tool Assembly

Ref.	Part Number	Qty.	Description
1	108-6715	1	Gauge Bar ASM
1:2	32122-54	1	Screw-Head, Truss
1:3	108-6714	1	Stud-Weld
1:4	32103-3	2	Nut-Wing
2	29-9100	1	Brush And Handle ASM
2:1	36-4310	1	Brush
2:3	98-3206	1	Decal
2:4	29-9080	1	Handle
2:5	2410-18	1	Cap-Plastic
3	TOR4074	1	Adapter-Drive, Reel ■
4	115-0803	1	Rm/Gm Roller Rebuild Tool Kit

Ref.	Part Number	Qty.	Description
4:1	115-0852	1	Tool-Inner Seal
4:2	107-8133	1	Washer-Flat
4:3	115-0853	1	Tool-Bearing/Outer Seal
5	125-5610	1	Paper-Reel, Toro (10 Pack)
6	140-5531	1	Shim-Toro Reel (.002In)
7	131-6828	1	Indicator-Angle
8	131-6829	1	Mount-Indicator, Angle
9	137-0924	1	Tool-Hand TAP 7/8-16 (Rm DPA Reel) ●
10	137-0925	1	Tool-Hand TAP 7/8-16, LH (Rm DPA Reel) ●
11	147-1132	1	Tool-Drive, Roller Nut

● Not illustrated
■ Obtain directly from K-Line Industries, Inc. (https://klineind.com)

Attachments and Accessories

For 03488 22-inch 11-Blade EdgeSeries Forward Swept Reel DPA Cutting Unit Reelmaster 3550 or 3555 Traction Unit

Product Name	Model/Part
Rear Roller Brush Kit (5 Inch Reel)	03406
Weight Kit for 8-Blade or 11-Blade Hydraulic DPA Cutting Unit with 5 Inch Reel	03412
22in Fairway Flex Grass Basket Kit	03415
22in Fairway Compact Grass Basket Kit	03416
Weight Kit (For Universal Groomer Only and Hydraulic Reel Motors)	03417
Weight Kit for 8-Blade or 11-Blade DPA Cutting Unit with 5 Inch Reel	03484
Rear Roller Brush Kit (For Universal Groomer) (22in)	03658
5 Inch Universal/bi-directional Groomer	03763
Grooming Brush (22In)	03767
Universal Groomer Cartridge, Reelmaster 3555, 3575, 5010, and 5010-H Series 22-inch EdgeSeries Cutting Units with Universal Groomer	03772
Rear Roller Brush (3-18 Inch, 2-22 Inch) Kit	03918
3in Dia Collar Kit	104-8215
Wiehle Scraper ASM	107-2993-03
Rear Roller Scraper Kit	107-3280
Gauge Bar Assembly	108-6715
Bedknife-STD (Fairway)	108-9096
Comb/Scraper Kit	110-1735
Brush-Roller (High Height-Of-Cut)	110-1740
Bedknife-HD (Fairway)	110-4074
Bedknife-Low HOC (Fairway)	110-4084
3in Full Front Roller Scraper	110-9602-03
Shoulder Roller Scraper ASM	110-9609-03
Plastic Shoulder Roller ASM	114-5421
Roller Rebuild Kit	114-5430
Roller Rebuild Tool Kit	115-0803
Bedknife Edgemax Low cut Extended (Fairway)	119-4280
Cutting Unit Kickstand	119-8010-03
Bedknife-Lowcut Extended (Fairway)	120-1640
Heavy-Duty DPA MVP Kit	120-7230
Rear Roller Adjustment Kit	125-0570
Toro Reel Paper (10 Pack)	125-5610
Toro Reel Shim (0.002in)	125-5611
Bedbar-Aggresive, 5in	131-3220-0P
Groomer/RRB Seal Kit	131-3233
Angle Indicator	131-6828
Angle Indicator Mount	131-6829
Groomer Rod Kit	131-6845
Broomer Kit (22In)	132-7125
Universal Groomer Drive MVP Kit	133-0150
Rear Roller Brush (Universal) MVP Kit	133-0153
Rear Roller Brush MVP Kit	133-0157
Bedknife-Edgemax Lowcut	137-0832
Bedknife-Edgemax (Fairway)	137-0833
22in Rear Roller HD Brush	137-0842

Attachments and Accessories (continued)

High Height-of-Cut Kit, Reelmaster 3000 or 5000 Series DPA Cutting Unit	137-0890
Tool-hand Tap 7/8-16 (RM DPA Reel)	137-0924
Tool-hand Tap 7/8-16, LH (RM DPA Reel)	137-0925
Long Rear Roller Asm (2.5in Dia)(22in)	137-6107
Full Front Roller Asm (3in Dia)(22in)	137-6111
5in EdgeSeries+ 22in Fairway, 11 Blade, Low Drag, Forward Swept Reel	137-8427
Reel Drive Adapter (Obtain directly from K-Line Industries, Inc. (800) 241-0936)	TOR4112

Notes:

Notes:

Notes:



Count on it.