Form No. 3437-125 Rev E

AutoSteer Finish Kit

Serial Number 316000001 through 406294344 Multi Pro® 5800 Turf Sprayer with GeoLink®

Model No. 138-6246

Installation Instructions

The parts and instructions described in this manual are for installing both the AutoSteer Finish Kit and the AutoSteer Kit.

Introduction

The AutoSteer kit is an accessory for the GeoLink™ spray system, used for a turf spray application vehicle, and is intended to be used by professional, hired operators in commercial applications. It is designed primarily for spraying on well-maintained lawns in parks, golf courses, sports fields, and on commercial grounds. Using this product for purposes other than its intended use could prove dangerous to you and bystanders.

Visit www.Toro.com for product safety and operation training materials, accessory information, help finding a dealer, or to register your product.

Contents

Introduction 1
Setup 2
1 Preparing the Machine 5
2 Remove the Negative Battery Cable 5
3 Removing the Hood 6
4 Removing the Heat Shield and Undercarriage Shroud 7
5 Removing the Left, Front Wheel 7
6 Replacing the Left Spindle 7
7 Installing the Steering Position Sensor 11
8 Routing the ISO-CAN Bus Harness 14
9 Removing the CAN Bus Resistor 19
10 Installing the Adapter Harness and Terminating Resistor 20
11 Plugging the Hydraulic Pump Suction Hose 21
12 Removing the Steering Wheel and Steering Valve 21
13 Installing the Steering Valve 23
14 Removing the Steering Valve Hoses 24
15 Installing the EHI Steering Valve 28
16 Drilling the Console Base 30
17 Installing the Electrical Harness 32
18 Replacing the Hydraulic Pump 41
19 Installing the Forward Pressure Hose for the Boom-Lift Manifold 44
20 Installing the Hoses 45
21 Installing the Negative Battery Cable 55
22 Purging Air from the Hydraulic System 55
23 Checking for Hydraulic Leaks 56
24 Installing the Hood 56
25 Installing the Heat Shield and Undercarriage Shroud 57
26 Checking the Hydraulic Fluid Level 57
27 Verifying the Software Version 57
28 Verifying the Minimum Hardware Requirements 58
29 Downloading the Software 58
30 Installing the Software and Driver Files 59
31 Installing the Service and Data Files 62
32 Selecting the Gateway Channel 65
33 Setting Up and Calibrating the Software 66
Schematics 70

© 2024—The Toro® Company
8111 Lyndale Avenue South
Bloomington, MN 55420

Register at www.Toro.com.

Original Instructions (EN)
Printed in the USA
All Rights Reserved

3437-125

Installation

Loose Parts

Use the chart below to verify that all parts have been shipped.

Procedure	Description	Qty.	Use
1	No parts required	–	Prepare the machine.
2	No parts required	–	Remove the negative battery cable.
3	No parts required	–	Remove the hood.
4	No parts required	–	Remove the heat shield and shroud.
5	No parts required	–	Remove the wheel.
6	Left spindle Bushing Grease fitting King pin Cotter pin (1-1/4 x 1/8 inches—from kit Model 41636) Cotter pin (1-1/2 x 5/32 inch—from kit Model 41636) Shim	1 2 1 1 2 1 1	Replacing the left spindle.
7	Steering position sensor (magnetic target and sensor) Jam nut (10 mm) Sensor bracket Sensor alignment tool Pan-head screw (#4 x 3/4 inch) Locknut (#4) Flange-head capscrew (1/4 x 3/4 inch) Locknut (1/4 inch)	1 1 1 1 2 2 2 2	Install the steering position sensor.
8	ISO-CAN bus harness—302 cm (119 inches) Cable ties	1 12	Route the ISO-CAN bus harness.
9	No parts required	–	Remove the CAN bus resistor.
10	Adapter harness—13 cm (5 inches) Cable tie	1 1	Install the adapter harness and terminating resistor.
11	Hose plug (plastic)	1	Plug the hydraulic pump suction hose.
12	No parts required	–	Remove the steering valve.
13	Steering valve	1	Install the steering valve.
14	Cap	1	Remove the hydraulic hoses.

Procedure	Description	Qty.	Use
15	Manifold mount Flange-head capscrew (1/4 x 1/2 inch) Washer (1/4 inch) Flange locknut (1/4 inch) U-bolt (3/8 inch) Flange locknut (3/8 inch) Model/serial decal EHI steering valve Straight hydraulic fitting (-6 x 12 mm) Straight hydraulic fitting (-8 x 22 mm) Straight hydraulic fitting (-6 x 18 mm) Flange-head capscrew (8 x 16 mm)	1 2 2 2 2 4 1 1 2 4 4 3	Install the steering valve.
16	Grommet	1	Drill the console base.
17	2-position switch Transport decal Wire harness Cable tie Fuse (10 A) Push-button switch, jam nut, and lock washer AutoSteer remote-engage decal	1 1 1 7 1 1 1	Install the electrical harness.
18	O-ring 1.6/1.8 mm (0.489 /0.070 inch) O-ring 15.6/1.8 mm (0.614/0.070 inch) O-ring 29.7/2.9 mm (1.171/0.116 inch) O-ring 16.4/2.3 mm (0.644/0.090 inch) Hydraulic pump Straight fitting (7/8 x 13/16 inch) Straight fitting (1/4 x 1/4 inch) O-ring 85.7/ mm (3.375/0.630 inch)	2 1 1 1 1 1 1 1	Replacing the hydraulic pump.
19	Forward pressure hose 10 x 660 mm (3/8 x 26 inches)	1	Install the forward pressure hose for the boom-lift manifold.

Procedure	Description	Qty.	Use
20	Hose 6 x 203 mm (1/4 x 8 inches); -6 (straight) and -6 (45°) fittings	1	Install the hoses.
	O-ring 12.4/1.8 mm (0.489/0.070 inch)	2	
	Hose 6 x 2819 mm (1/4 x 111 inches); -4 (90°) and -6 (90°) fittings	1	
	Hose 6 x 673 mm (1/4 x 26-1/2 inches); -4 (straight) and -6 (90°) fittings	1	
	Hose 6 x 711 mm (1/4 x 28 inches); -4 (straight) and -6 (90°) fittings	1	
	Hose 10 x 187 mm (3/8 x 7-3/8 inches); -6 (straight) and -8 (90°) fittings	1	
	Hose 10 x 264 mm (3/8 x 10-3/8 inches); -8 (90°) and -6 (45°) fittings	1	
	O-ring 9.2/1.8 mm (0.364/0.070 inch)	2	
	Hose 6 x 1397 mm (1/4 x 55 inches); -6 (straight) and -6 (90°) fittings	1	
	Hose 6 x 1270 mm (1/4 x 50 inches); -6 (straight) and -6 (90°) fittings	1	
	Hose 10 x 2921 mm (3/8 x 115 inches); -8 (90°) and -8 (90°) fittings	1	
	O-ring 7.6/1.8 mm (0.301/0.070 inch)	1	
	Cable tie	3	
21	No parts required	–	Finish the kit installation.
22	No parts required	–	Purge air from the hydraulic system.
23	No parts required	–	Check for hydraulic leaks.
24	Push-in fasteners	6	Install the hood.
25	No parts required	–	Install the heat shield and shroud.
26	No parts required	–	Check the hydraulic fluid level.
27	No parts required	–	Verify the software version.
28	No parts required	–	Verify the minimum hardware requirements.
29	No parts required	–	Download the software.
30	No parts required	–	Install the Danfoss PLUS+1 service tool software
31	No parts required	–	Install the service and data files.
32	No parts required	–	Select the gateway channel.
33	No parts required	–	Set up the GeoLink software.

1

Preparing the Machine

No Parts Required

Procedure

⚠ CAUTION

Chemicals are hazardous and can cause personal injury.

- **Read the directions on the chemical labels before handling the chemicals and follow all manufacturer recommendations and precautions.**
- **Keep chemicals away from your skin. Should contact occur, wash the affected area thoroughly with soap and clean water.**
- **Wear goggles and any other protective equipment recommended by the chemical manufacturer.**

1. Park the machine on a level surface.
2. Engage the parking brake.
3. Ensure that the tires are aligned straight ahead.
4. Shut off the engine and remove the key.
5. Wait for all movement to stop before leaving the operator's seat.
6. Clean the sprayer; refer to Cleaning the Sprayer in the *Operator's Manual* for the machine.
7. Allow the machine components to cool.

2

Remove the Negative Battery Cable

No Parts Required

Procedure

1. Remove the cover from the battery box (Figure 1).

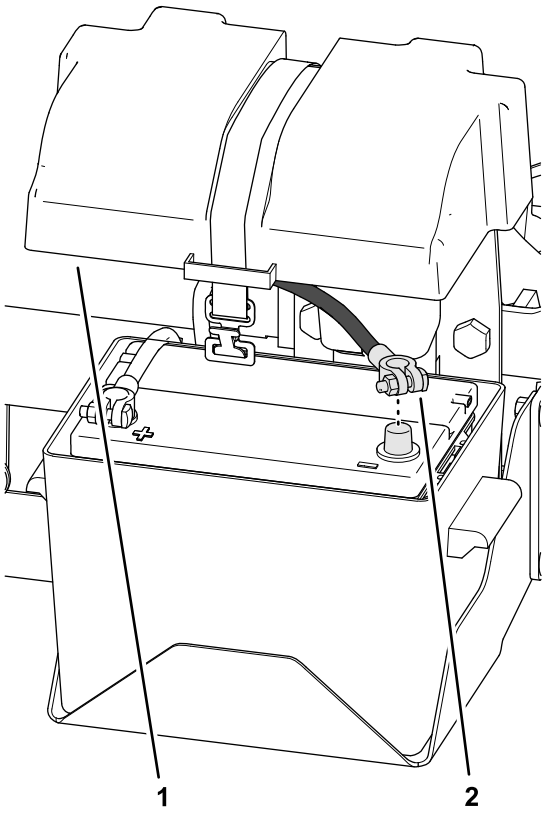

Figure 1

1. Cover
2. Negative battery cable

2. Remove the negative-battery cable from the battery (Figure 1).

3

Removing the Hood

No Parts Required

Procedure

1. Remove the headlight connector of the machine wire harness from the connector of the headlight bulb (Figure 2).

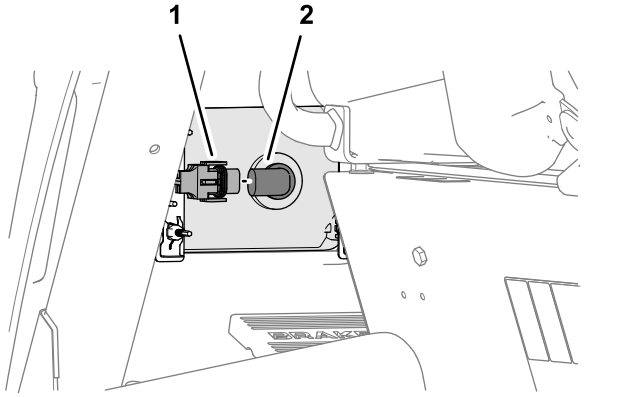

Figure 2

1. Connector (machine harness—headlight)
2. Connector (bulb)

2. Repeat step 1 at the other headlight.
3. Remove the 4 push-in fasteners that secure the bottom flange of the hood to the machine (Figure 3).

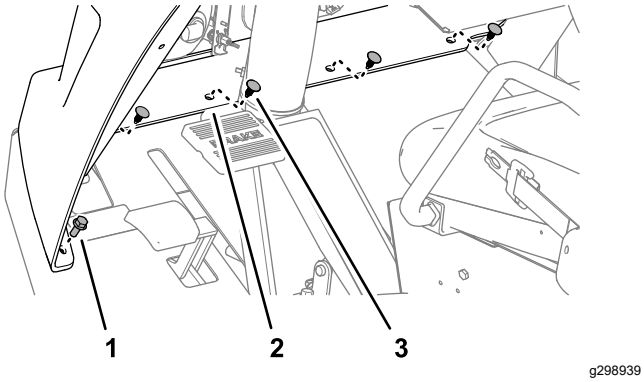

Figure 3

1. Flange-head bolt (5/16 x 3/4 inch)
2. Flange (hood)
3. Push-in fastener

4. Remove the 2 flange-head bolts (5/16 x 3/4 inch) that secure the bottom flange to the machine (Figure 3).
5. Remove the 4 Phillips pan-head screws (1/4 x 1 inch) that secures the hood to the dash support (Figure 4).

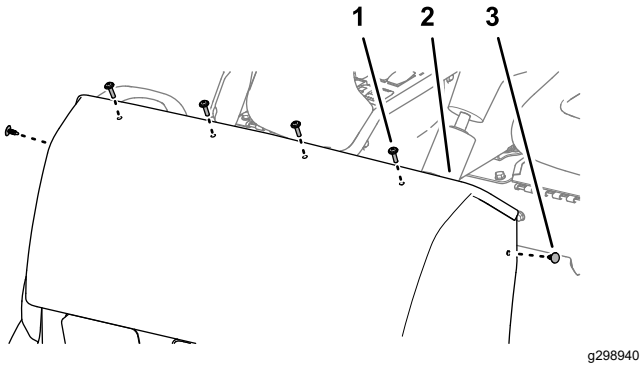

Figure 4

1. Phillips pan-head screw (1/4 x 1 inch)
2. Hood
3. Push-in fastener

6. Remove the 2 push-in fasteners that secure the hood to the dash support (Figure 4).
7. Remove the hood from the machine (Figure 5).

   Note: Retain the hood, 2 flange-head bolts, and 4 Phillips pan-head screws.

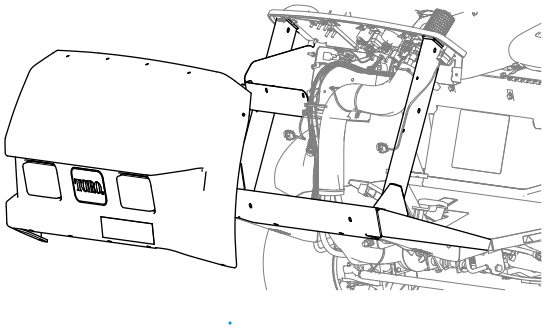

Figure 5

4

Removing the Heat Shield and Undercarriage Shroud

2015 and Later Machines

No Parts Required

Procedure

If equipped, remove the heat shield and shroud from the bottom of the machine; refer to the *Operator's Manual* for your machine.

5

Removing the Left, Front Wheel

No Parts Required

Procedure

1. Lift the machine and support it with jack stands; refer to the *Operator's Manual* for your machine.
2. Remove the 5 wheel nuts that secure the left tire and wheel to the wheel hub, and remove the wheel from the machine (Figure 6).

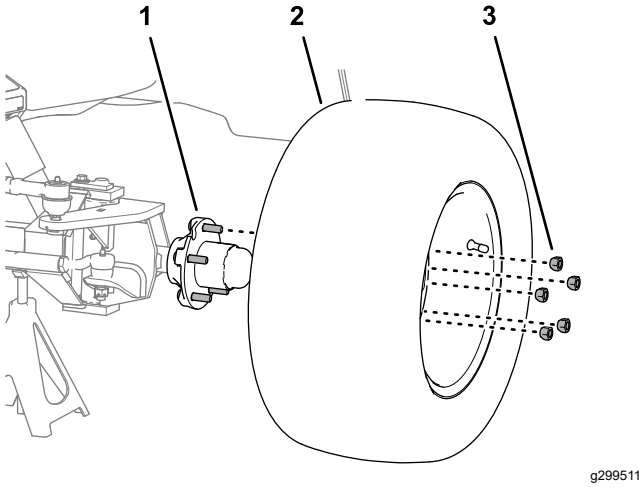

Figure 6

1. Wheel hub
2. Wheel nut
3. Tire and wheel

6

Replacing the Left Spindle

Parts needed for this procedure:

1	Left spindle
2	Bushing
1	Grease fitting
1	King pin
2	Cotter pin (1-1/4 x 1/8 inches—from kit Model 41636)
1	Cotter pin (1-1/2 x 5/32 inch—from kit Model 41636)
1	Shim

Removing the Wheel Hub

1. Remove the dust cap from the hub.

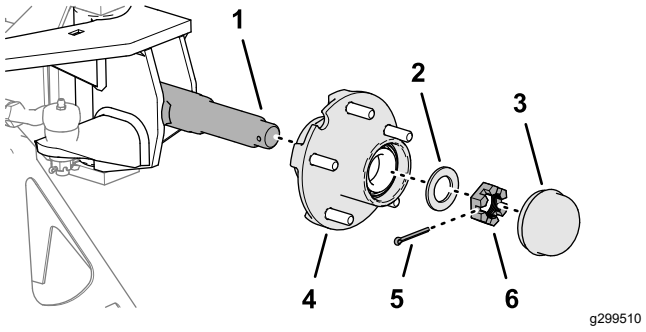

Figure 7

1. Spindle
2. Thrust washer
3. Dust cap
4. Hub
5. Cotter pin
6. Slotted nut (1 inch)

2. Remove the cotter pin that secures the slotted nut to the spindle, and remove the slotted nut and thrust washer (.

   Note: Discard the cotter pin.
3. Carefully remove the hub from the spindle.

Removing the Spindle

1. Remove the cotter pin that secures the slotted nut to the tie-rod end of the steering cylinder, and remove the slotted nut and thrust washer.

   Note: Discard the cotter pin.

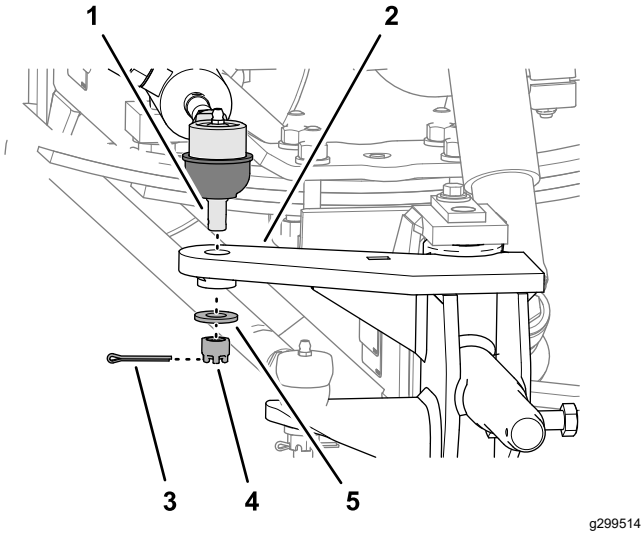

g299514

Figure 8

1. Tie-rod end (steering cylinder)
2. Steering arm (left spindle)
3. Cotter pin
4. Slotted nut (12 mm)
5. Thrust washer (1/2 x 1-1/8 inches)

2. Separate the tie rod end of the cylinder from the steering arm of the left spindle.
3. Remove the cotter pin that secures the slotted nut to the tie-rod end of the steering rod, and remove the slotted nut.

   Note: Discard the cotter pin.

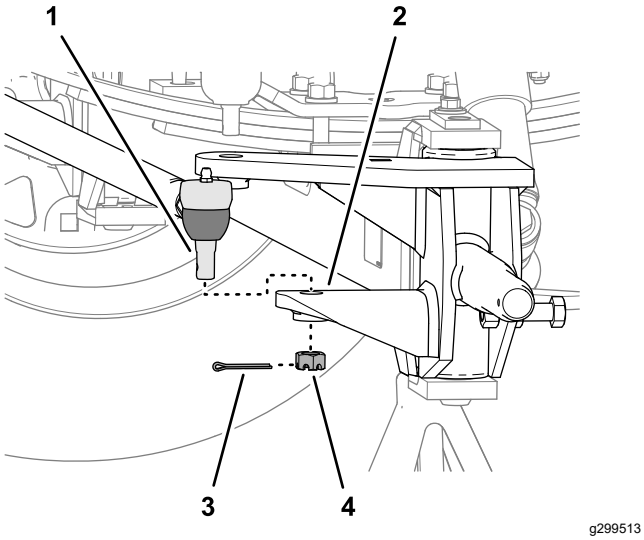

g299513

Figure 9

1. Tie-rod end (steering rod)
2. Tie-rod arm (left spindle)
3. Cotter pin
4. Slotted nut (1/2 inch)

4. Separate the tie rod end of the steering rod from the tie-rod arm of the left spindle.
5. Remove the flange head bolt (5/16 x 5/8 inch) and washer (3/8 x 7/8 inch) the secure the king pin to the yoke of the front axle.

   Note: Retain the flange head bolt and washer for installation of the new spindle. Discard the old king pin.

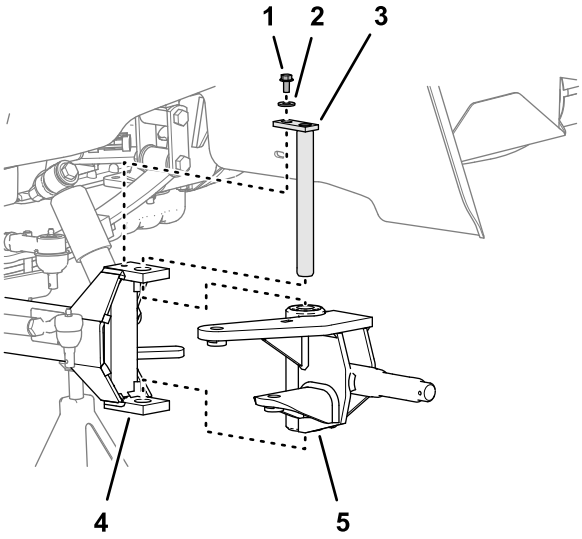

g299512

Figure 10

1. Flange head bolt (5/16 x 5/8 inch)
2. Washer (3/8 x 7/8 inch)
3. King pin
4. Yoke (front axle)
5. Left spindle

6. Remove the king pin from the yoke and left spindle, and remove the spindle from the yoke.

Preparing the New Spindle

1. Insert the 2 bushings into the ends of the king pin sleeve of the spindle.

   Note: Ensure that the bushings are fully seated in the spindle.

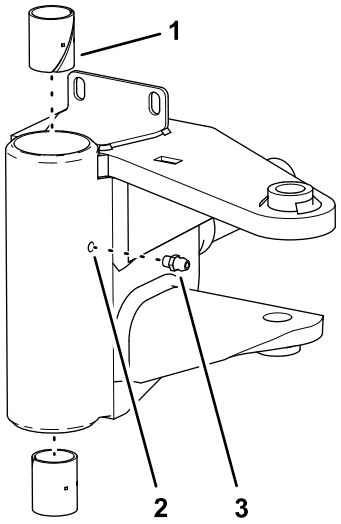

g299506

Figure 11

1. Bushing
2. Grease fitting
3. Hole (king-pin sleeve)

2. Assemble the grease fitting into the hole in the king-pin sleeve.
3. Remove the thrust bushing from the top of the old left spindle.

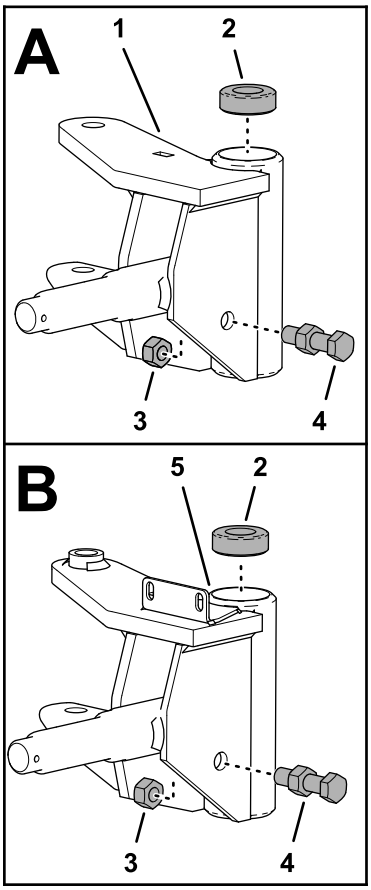

g299509

Figure 12

1. Left spindle (old)
2. Thrust bearing
3. Nut (1/2 inch)
4. Axle stop bolt and nut
5. Left spindle (new)

4. Remove the nut (1/2 inch) that secures the axle stop bolt to the spindle.

   Important: **Do not move the other nut assembled at the middle of the stop bolt.**

   Note: You no longer need the old left spindle.
5. Assemble the axle stop bolt and nut into the hole in the new left spindle.
6. Secure the stop bolt to the spindle with the previously removed nut.
7. Assemble the thrust bearing into the top of the new left spindle.

Installing the Spindle to the Machine

1. Align the holes in the thrust bushing and the spindle with the hole in the yoke of the axle.

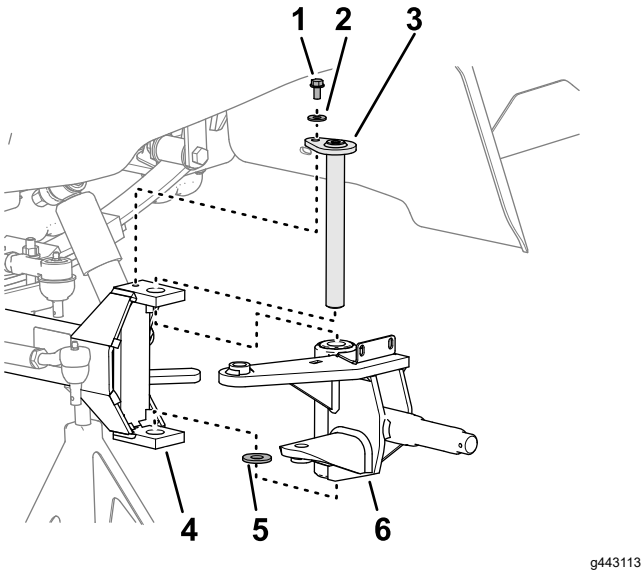

Figure 13

1. Flange head bolt (5/16 x 5/8 inch)
2. Washer (3/8 x 7/8 inch)
3. King pin
4. Yoke (front axle)
5. Shim
6. Left spindle

2. Assemble the spindle to the yoke with the new king pin.
3. Install the shim into the wheel humb/spindle assembly.
4. Secure the king pin to the yoke with the previously removed flange head bolt (5/16 x 5/8 inch) and washer (3/8 x 7/8 inch).
5. Grease the spindle at the grease fitting at the king-pin sleeve; refer to Preparing the New Spindle (page 9); refer to the *Operator's Manual* for the specified grease.

Assembling the Steering Rod and the Steering Cylinder to the Spindle

1. Assemble the tie-rod end of the steering rod into the hole in the tie-rod arm of the left spindle.

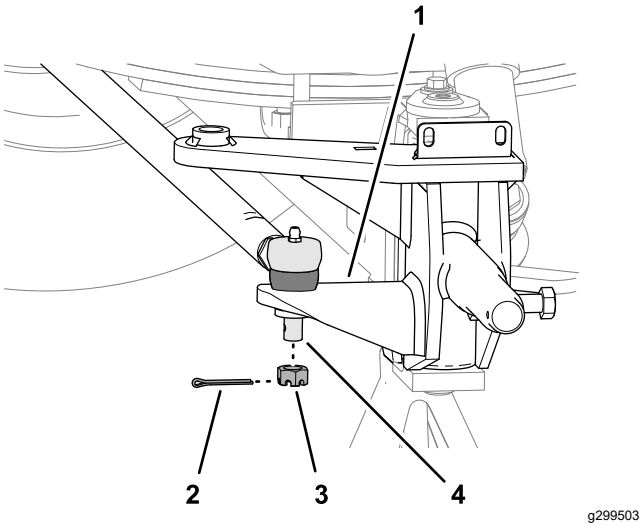

Figure 14

1. Tie-rod arm (left spindle)
2. Cotter pin (1-1/4 x 1/8 inches—from kit Model 41636)
3. Slotted nut (1/2 inch)
4. Tie-rod end (steering rod)

2. Assemble the slotted nut (1/2 inch) onto the tie-rod end and torque the nut to 27 to 34 N·m (20 to 25 ft-lb).

   Note: If the slot of the nut and the hole in the rod end do not align, tighten nut until the next slot aligns with the hole.
3. Secure the slotted nut to the tie-rod end with the cotter pin (1-1/4 x 1/8 inches).

   Note: Bend both ends of the cotter pin.
4. Assemble the tie-rod end of the steering cylinder into the hole in the steering arm of the left spindle.

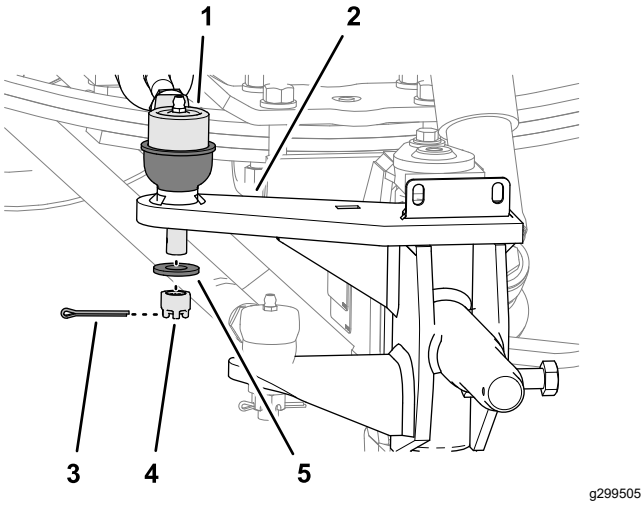

Figure 15

1. Tie-rod end (steering cylinder)
2. Steering arm (left spindle)
3. Cotter pin (1-1/4 x 1/8 inches—from kit Model 41636)
4. Slotted nut (12 mm)
5. Thrust washer (1/2 x 1-1/8 inches)

5. Assemble the slotted nut (12 mm) and thrust washer (1/2 x 1-1/8 inches) onto the tie-rod end, and torque the nut to 27 to 34 N·m (20 to 25 ft-lb).

   Note: If the slot of the nut and the hole in the rod end do not align, tighten nut until the next slot aligns with the hole.

6. Secure the slotted nut to the tie-rod end with the cotter pin (1-1/4 x 1/8 inches).

   Note: Bend both ends of the cotter pin.

Installing the Wheel Hub

1. Align the hub the spindle, and carefully slide the hub onto the spindle.

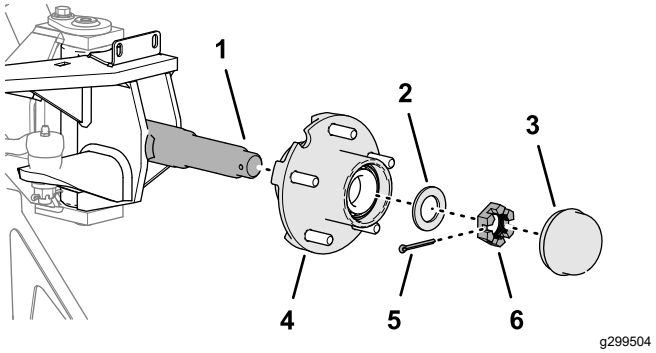

Figure 16

1. Spindle
2. Thrust washer
3. Dust cap
4. Hub
5. Cotter pin (1-1/2 x 5/32 inch—from kit Model 41636)
6. Slotted nut (1 inch)

2. Assemble the thrust washer and the slotted nut (1 inch) onto the spindle.
3. Tighten the slotted nut to 9 to 180 N·m (75 to 180 in-lb).
4. Loosen the slotted nut until it moves away from washer and hub has end play.
5. Tighten the slotted nut to 170 to 226 N·cm (15 to 20 in-lb).

   Note: If the slot of the nut and the hole in the spindle do not align, tighten nut until the next slot aligns with the hole.

6. Secure the slotted nut to the tie-rod end with the cotter pin.

   Note: Bend both ends of the cotter pin.

7

Installing the Steering Position Sensor

Parts needed for this procedure:

1	Steering position sensor (magnetic target and sensor)
1	Jam nut (10 mm)
1	Sensor bracket
1	Sensor alignment tool
2	Pan-head screw (#4 x 3/4 inch)
2	Locknut (#4)
2	Flange-head capscrew (1/4 x 3/4 inch)
2	Locknut (1/4 inch)

Installing the Sensor Bracket

1. Remove the capscrew from the end of the kingpin (Figure 17).

   Note: Discard the capscrew.

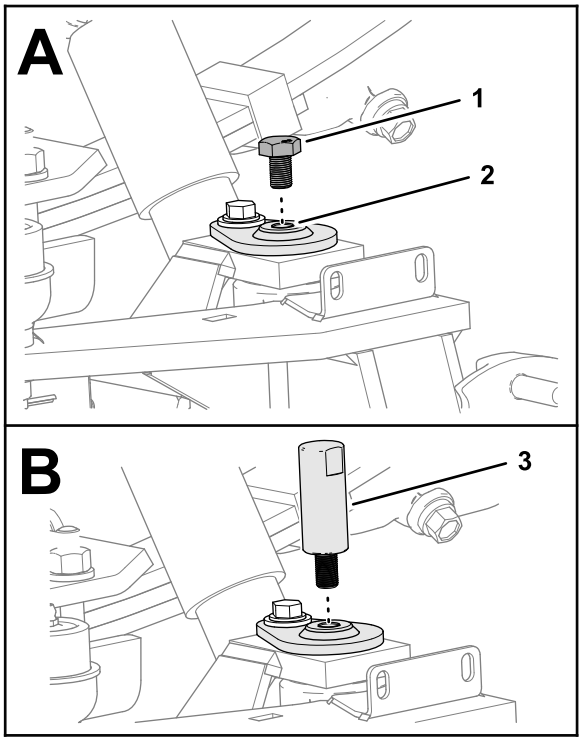

g299593

Figure 17

1. Capscrew
2. King pin
3. Alignment tool

2. Thread the alignment tool into the top of the king pin (Figure 17).
3. Align the sensor bracket over the alignment tool and the slots in the flange of the spindle (Figure 18).

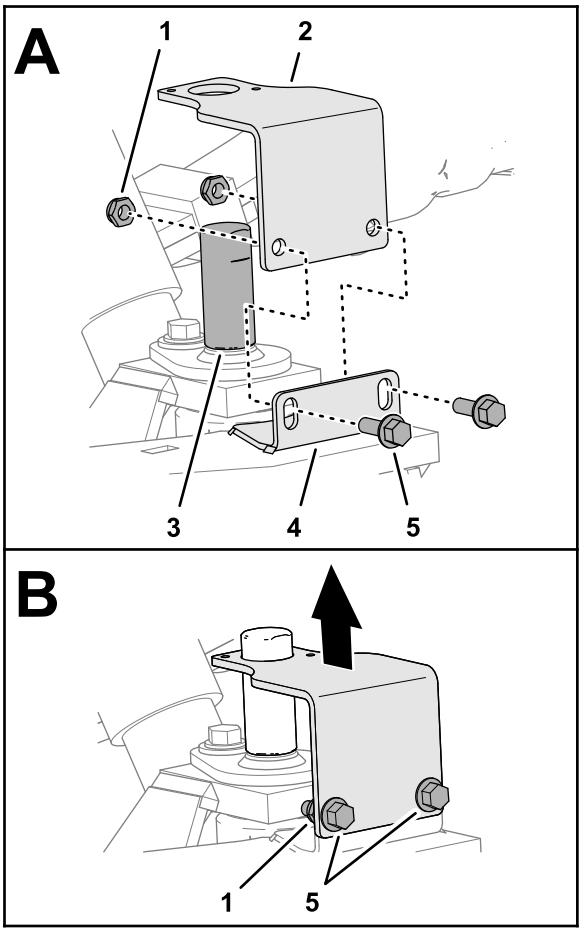

g299595

Figure 18

1. Locknut (1/4 inch)
2. Sensor bracket
3. Alignment tool
4. Flange (spindle)
5. Flange-head capscrews (1/4 x 3/4 inch)

4. Loosely assemble the bracket to the flange (Figure 18) with 2 flange-head capscrews (1/4 x 3/4 inch) and 2 locknuts (1/4 inch).
5. Position the bracket to the bottom of the slots in the flange of the spindle, and tighten the flange-head capscrews and locknuts (Figure 18).
6. Remove the alignment tool (Figure 19).

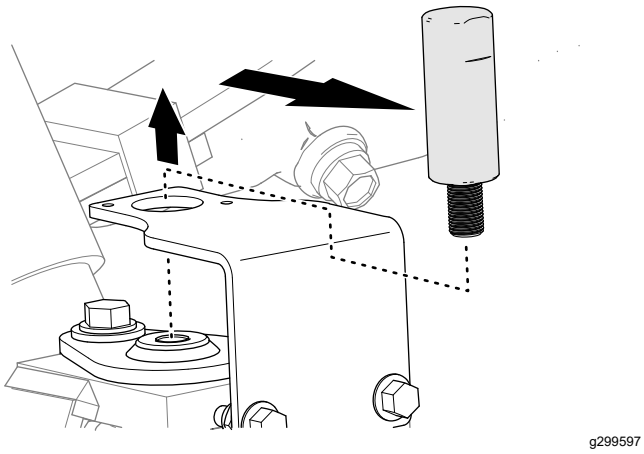

g299597

Figure 19

Assembling the Magnetic Target and Sensor

1. Fully thread the jam nut onto the magnetic target.

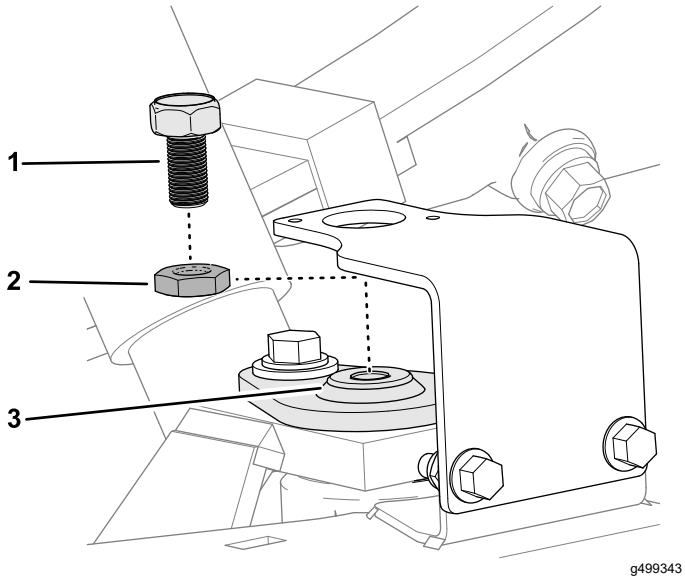

g499343

Figure 20

1. Magnetic target
2. Jam nut
3. King pin

2. Thread the magnetic target into the top of the king pin.
3. Assemble the steering position sensor to the sensor bracket with 2 pan-head screws (#4 x 3/4 inch) and locknuts (#4), and tighten the screws and locknuts.

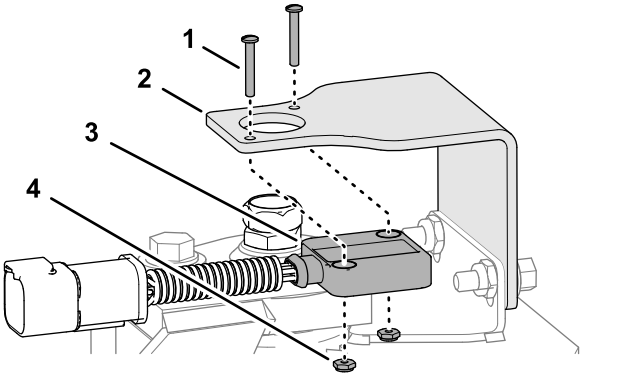

g299596

Figure 21

1. Pan-head screws (#4 x 3/4 inch)
2. Sensor bracket
3. Steering position sensor
4. Locknuts (#4)

Adjusting the Magnetic Target

1. Adjust the position of the magnetic target until you measure a gap 4 mm (0.16 inch) between the target and the face of sensor (Figure 22).

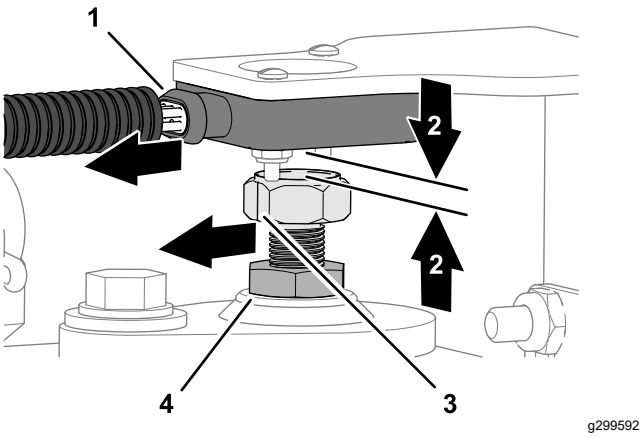

g299592

Figure 22

1. Wiring port (sensor)
2. Gap 3.5 mm (0.14 inch)
3. Indicator line (magnetic target)
4. Jam nut

2. Rotate the magnetic target until the indicator line that is stamped into the flat of the magnetic target aligns with the wiring port of the sensor (Figure 22).
3. Tighten the jam nut (Figure 22).
4. Measure the gap between the target and the face of sensor (Figure 22). You should measure 2 to 4 mm (0.08 to 0.16 inch).

   Note: If the gap is smaller than 2 mm (0.08 inch) or larger than 4 mm (0.16 inch)—adjust the position of the magnetic target, align the indicator line, and tighten the jam nut.

Installing the Wheel

1. Align the holes of the wheel onto the studs of the wheel hub (Figure 23).

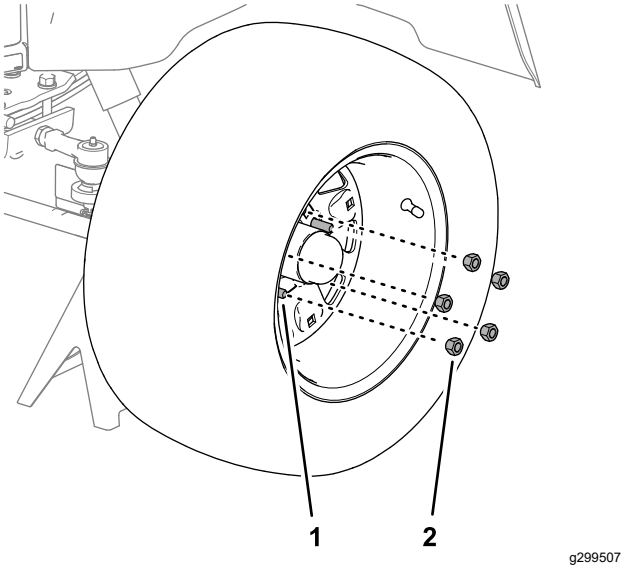

Figure 23

1. Stud
2. Wheel nut

2. Assemble the wheel to the studs with the 5 wheel nuts, and tighten them by hand (Figure 23).
3. Lower the machine and remove the jack stands.
4. Torque the wheel nuts in a crossing pattern to 75 to 102 N·m (55 to 75 ft-lb).

8

Routing the ISO-CAN Bus Harness

Parts needed for this procedure:

1	ISO-CAN bus harness—302 cm (119 inches)
12	Cable ties

Identifying the GeoLink Navigation Cable Type

1. Look at the type of cover over the navigation cable of your GeoLink system.

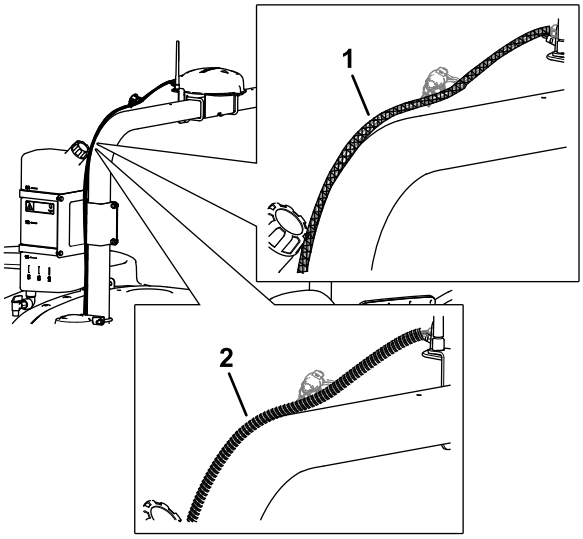

Figure 24

1. Braided cover
2. Convoluted-tube

2. Record the type of navigation cable cover here: _____

Removing the Terminating Resistor Harness

GeoLink Navigation Cable with a Braided Cover

1. Tilt the passenger seat forward and secure it with the prop rod.
2. Remove the 2-pin and 4-pin connectors of the terminating-resistor harness from the 2-socket connector (switched power) and 4-socket connector (labeled CAN 1/ISOBUS) of the GeoLink harness (Figure 25).

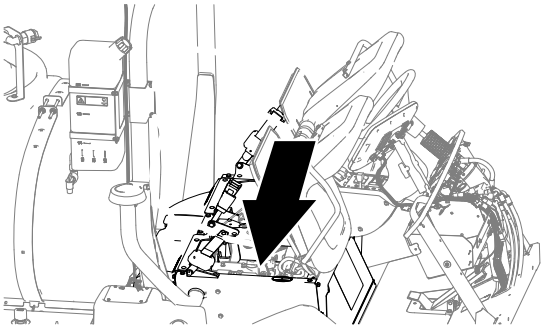

g309471

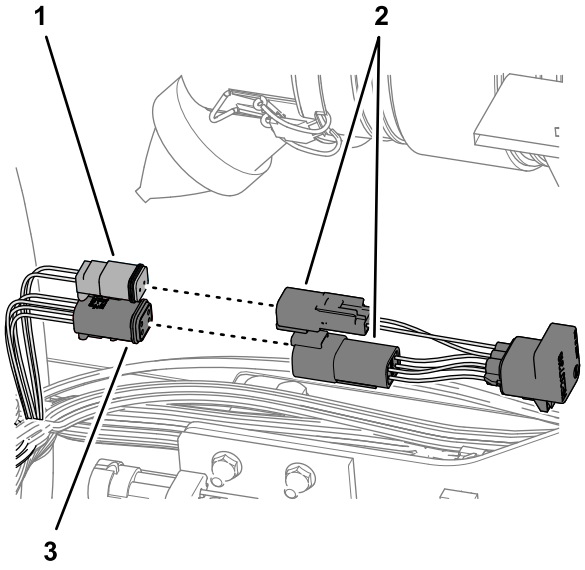

g309468

Figure 25

1. 2-socket connector (switched power—GeoLink harness)
2. Connectors (terminating-resistor harness)
3. 4-socket connector (labeled CAN 1/ISOBUS—GeoLink harness)

Connecting the ISO-CAN Bus Harness to the GeoLink Harness

GeoLink Navigation Cable with a Braided Cover

1. Route the ISO-CAN Bus Harness into the machine as show in Figure 26.

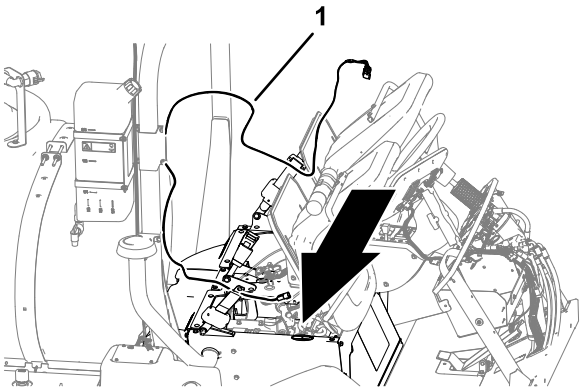

g309465

Figure 26

1. ISO-CAN bus harness

2. Plug the 4-pin connector of the ISO-CAN bus harness labeled To ISOBUS—ISO-CAN into the 4-socket connector of the GeoLink harness labeled CAN 1/ISOBUS (Figure 27).

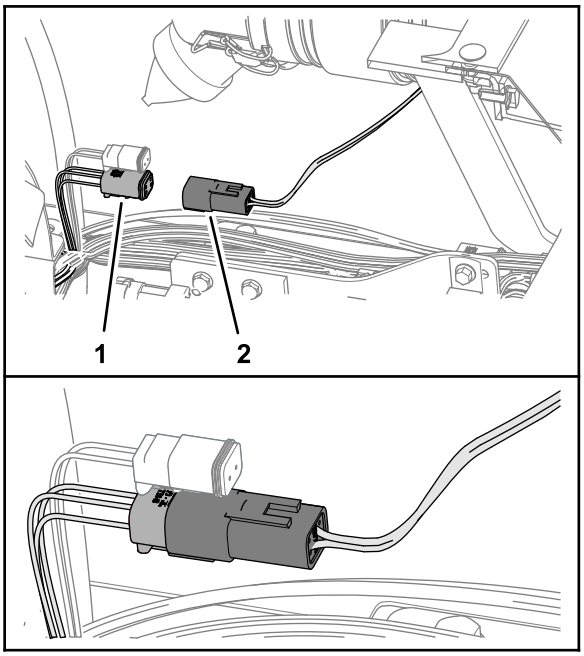

g309466

Figure 27

1. 4-socket connector (labeled CAN 1/ISOBUS—GeoLink harness)
2. 4-pin connector (labeled To ISOBUS—ISO-CAN bus harness)

Routing the Harness to the Console Base

GeoLink Navigation Cable with a Braided Cover

1. At the right side of the radiator, rout the ISO-CAN bus harness up, along the machine wire harness, and toward the center console (Figure 28).

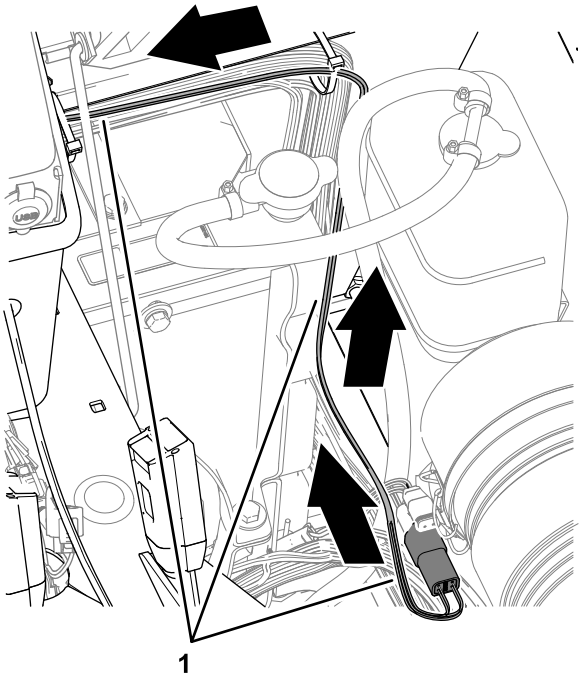

g309472

Figure 28

2. Route the ISO-CAN bus harness under the console base and along the machine wire harness (Figure 29).

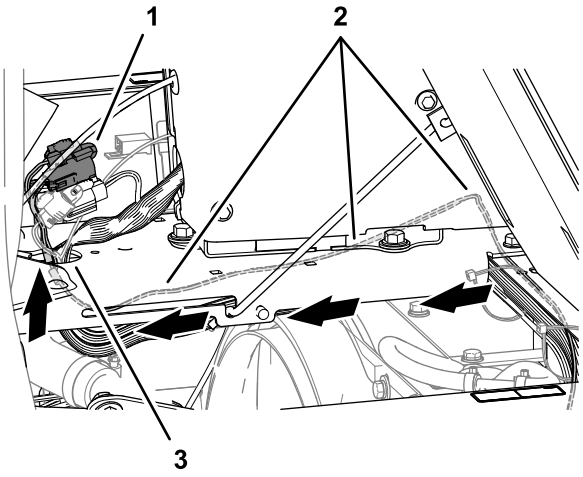

g308959

Figure 29

1. 3-pin connector (labeled TO TORO CANBUS) and 3-socket connector (labeled CAN PORT A)
2. ISO-CAN bus harness
3. Hole (console base)

3. Route the 3-pin connector (labeled TO TORO CANBUS) and 3-socket connector (labeled CAN PORT A) of the ISO-CAN bus harness through the hole in the console base (Figure 29).
4. Bundle the ISO-CAN bus harness as shown in Figure 30.

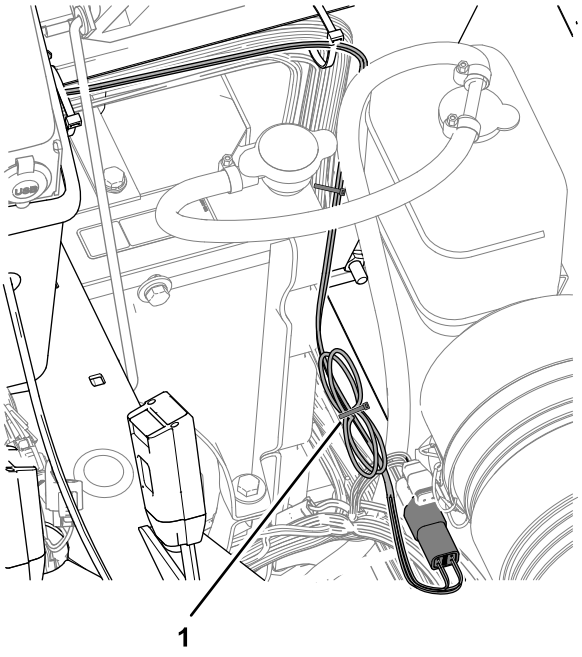

g309469

Figure 30

1. Cable tie and ISO-CAN bus harness bundle

5. Secure the ISO-CAN bus harness to the machine wire harness with 6 cable ties.

Connecting the ISO-CAN Bus Harness to the GeoLink Harness

GeoLink Navigation Cable with a Convoluted-Tube Cover

1. At the front of the machine, align the 4-pin connector of the ISO-CAN bus harness—302 cm (119 inches) labeled TO ISOBUS toward the dash panel (Figure 31).

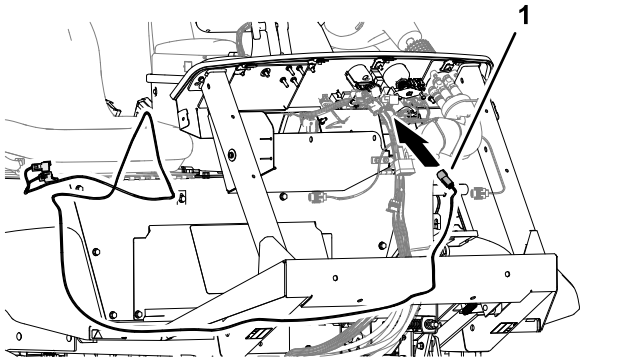

g308950

Figure 31

1. ISO-CAN bus harness—302 cm (119 inches) 4-pin connector labeled TO ISOBUS

2. Remove the ISO bus terminator from the 4-socket connector of the GeoLink harness labeled CAN 1 ISOBUS TERMINATOR (Figure 32).

   Note: You no longer need the cap.

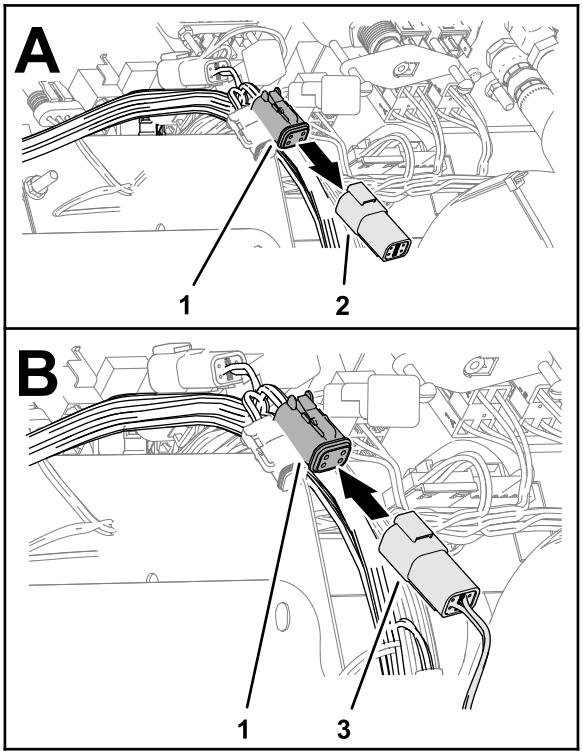

g308951

Figure 32

1. 4-socket connector (labeled CAN 1 ISOBUS TERMINATOR—GeoLink harness)
2. Terminator (ISO bus)
3. 4-pin connector (labeled TO ISOBUS—ISO-CAN bus harness)

3. Plug the TO ISOBUS connector of the ISO-CAN bus harness into the CAN 1 ISOBUS TERMINATOR connector of the GeoLink harness (Figure 32).

Routing the Harness to the Console Base

GeoLink Navigation Cable with a Convoluted-Tube Cover

1. Route the other end of the ISO-CAN bus harness through the grommet of the floor (Figure 33).

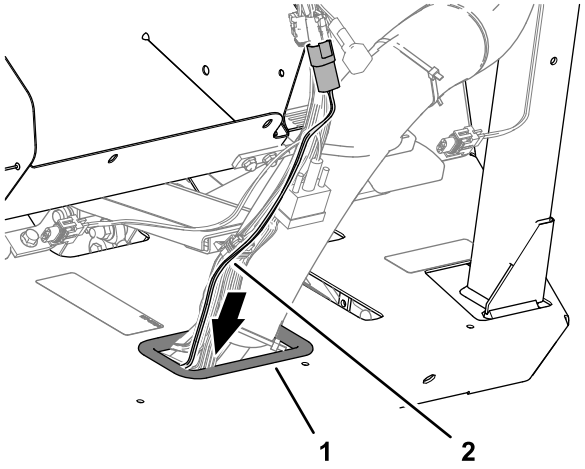

g308956

Figure 33

1. Grommet (floor)
2. ISO-CAN bus harness

2. Secure the ISO-CAN bus harness to the machine wire harness with 2 cable ties.
3. At the bottom of the machine, route the ISO-CAN bus harness along the wire harness of the machine (Figure 34).

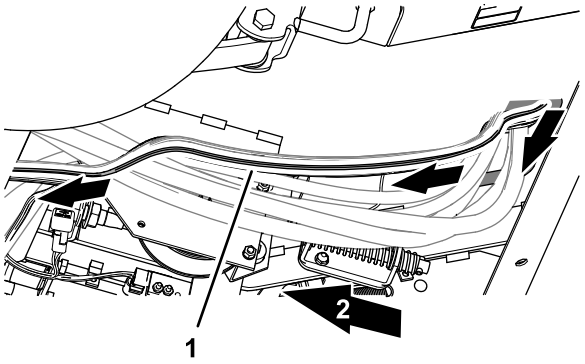

g308957

Figure 34

1. ISO-CAN bus harness

4. Secure the ISO-CAN bus harness to the machine wire harness with 3 cable ties.
5. Rotate the passenger seat forward and support it with the prop rod.
6. At the right side of the radiator, rout the ISO-CAN bus harness up, along the machine wire harness, and toward the center console (Figure 35).

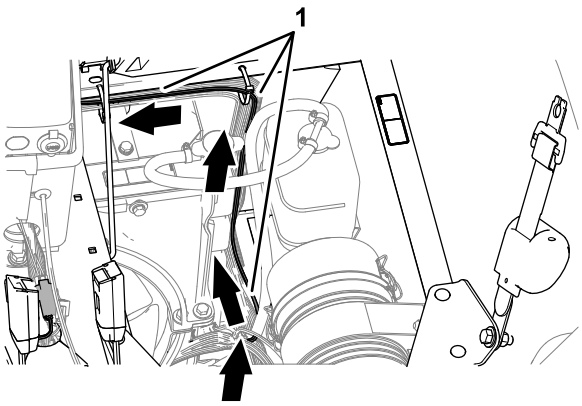

g308958

Figure 35

1. ISO-CAN bus harness

7. Route the ISO-CAN bus harness under the console base and along the machine wire harness (Figure 36).

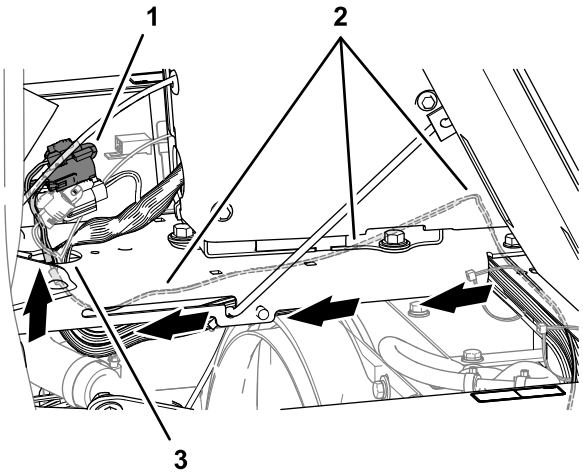

g308959

Figure 36

1. 3-pin connector (labeled TO TORO CANBUS) and 3-socket connector (labeled CAN PORT A)
2. ISO-CAN bus harness
3. Hole (console base)

8. Route the 3-pin connector (labeled TO TORO CANBUS) and 3-socket connector (labeled CAN PORT A) of the ISO-CAN bus harness through the hole in the console base (Figure 36).
9. Secure the ISO-CAN bus harness to the machine wire harness with 6 cable ties.

Connecting the ISO-CAN Bus Harness to the Machine Wire Harness

1. Remove the cap from the 3-socket connector of the machine wire harness (labeled CAN DIAGNOSTICS INTERCONNECT), as shown in Figure 37.

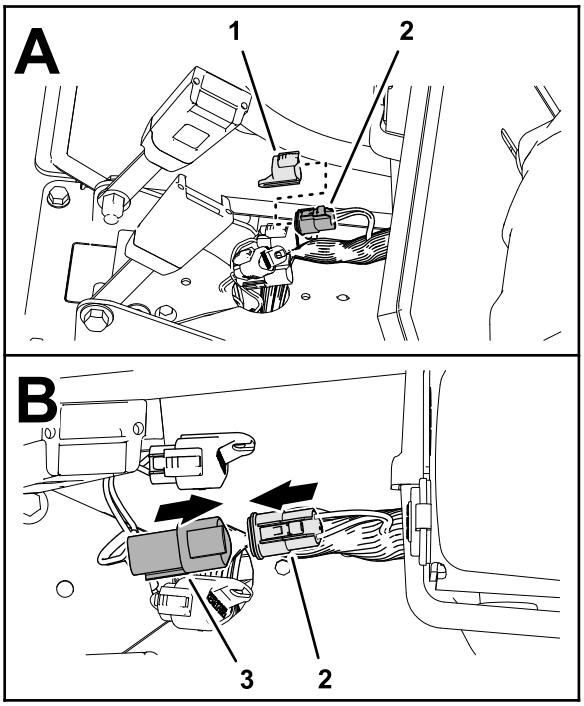

g308952

Figure 37

1. Cap
2. 3-socket connector (labeled CAN DIAGNOSTICS INTERCONNECT—machine wire harness)
3. 3-pin connector (labeled TO TORO CANBUS—ISO-CAN bus harness)

2. Plug the 3-pin connector of the ISO-CAN bus harness (labeled TO TORO CANBUS) into the 3-socket connector of the machine wire harness (labeled CAN DIAGNOSTICS INTERCONNECT), as shown in Figure 37.

9

Removing the CAN Bus Resistor

No Parts Required

Removing the Console Side Panel

1. Lower the passenger seat.
2. Remove 4 flange-head capscrews (1/4 x 3/4 inch) that secure the side panel of the center console as shown in Figure 38.

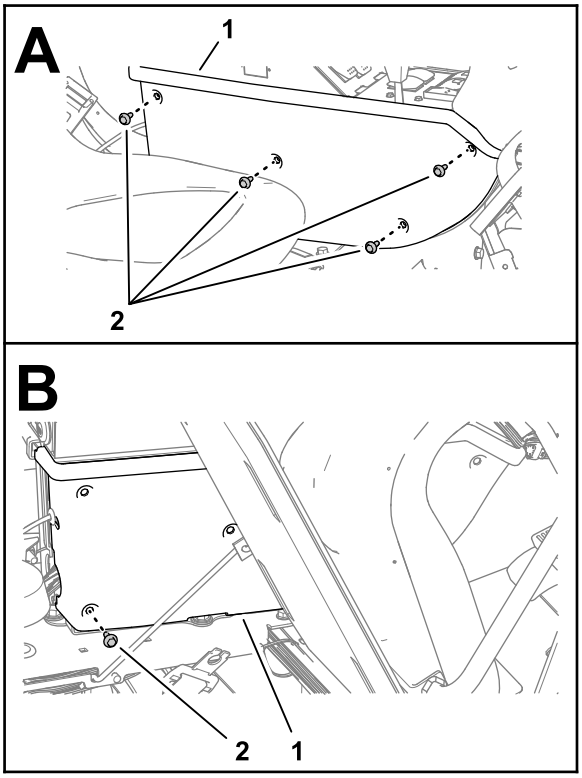

g301406

Figure 38

1. Side panel
2. Flange-head capscrews (1/4 x 3/4 inch)

3. Tilt the passenger seat forward, and remove the lower rear flange-head capscrew (Figure 38).
4. Remove the side panel from the center console.

Removing the Terminating Resistor

Forward of the TEC Controller, remove the resistor 75Ω from the 3-socket connector (not labeled) of the machine wire harness (Figure 39).

Note: Retain the resistor for installation in 10 Installing the Adapter Harness and Terminating Resistor (page 20).

Note: You will install the side panel to the center console when you install the AutoSteer Kit for the Multi Pro 5800 Turf Sprayer with GeoLink; refer to the setup instructions in the AutoSteer kit *Installation Instructions*.

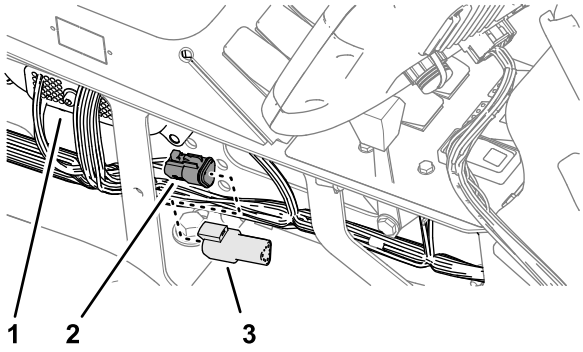

g308955

Figure 39

1. TEC controller
2. 3-socket connector (not labeled—machine wire harness)
3. Resistor 75Ω (3-pin)

10

Installing the Adapter Harness and Terminating Resistor

Parts needed for this procedure:

1	Adapter harness—13 cm (5 inches)
1	Cable tie

Procedure

1. At the satellite receiver, remove the ISO bus terminator for the 6-socket connector of the GeoLink harness (Figure 40).

   Note: You no longer need the ISO bus terminator.

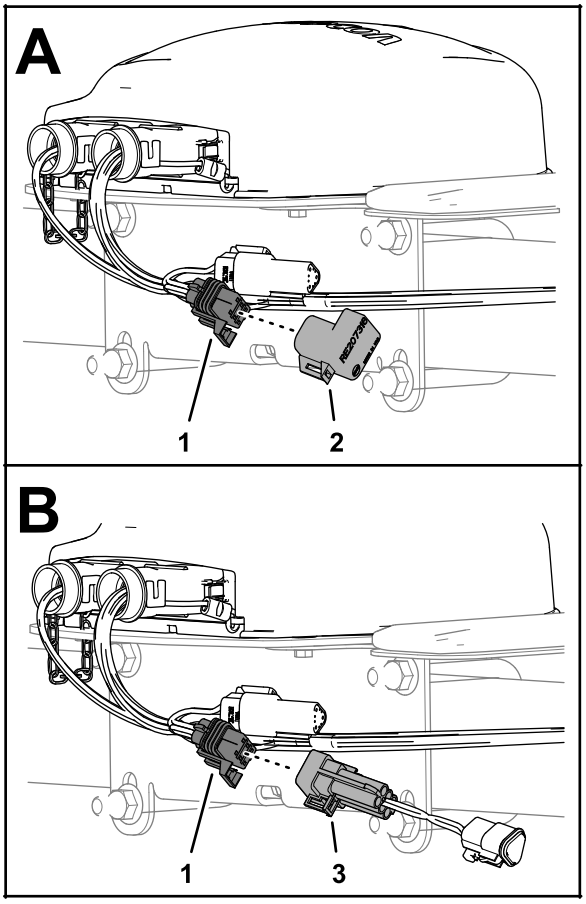

g314512

Figure 40

1. 6-socket connector (GeoLink harness)
2. Terminator (ISO bus)
3. 6-pin connector (adapter harness)

2. Plug the 6-pin connector of the adapter harness—13 cm (5 inches) into the 6-socket connector of the GeoLink harness (Figure 40).
3. Plug the resistor that you removed in Removing the Terminating Resistor (page 19) into the 3-socket connector of the adapter harness (Figure 41).

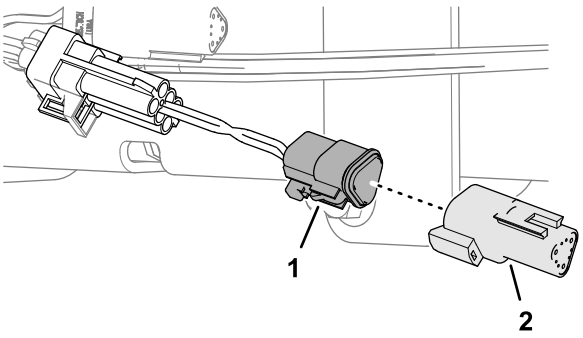

g308954

Figure 41

1. 3-socket connector (adapter harness)
2. Resistor 75Ω (3-pin)

4. Secure the adapter harness to the GeoLink harness with a cable tie.

11

Plugging the Hydraulic Pump Suction Hose

Parts needed for this procedure:

1	Hose plug (plastic)

Procedure

Important: **When you remove the suction hose from the hydraulic pump, you must quickly install the hose plug to minimize hydraulic fluid loss.**

1. At the bottom of the machine, align a drain pan under the hydraulic pump and place the hose plug near the pump (Figure 42).

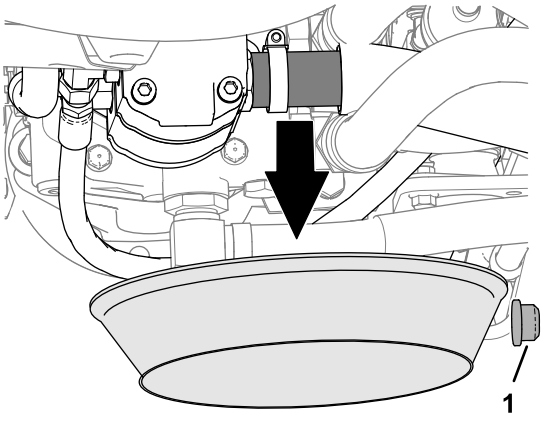

g313934

Figure 42

1. Hose plug

2. Loosen the hose clamp that secures the suction hose to the hydraulic pump (Figure 43).

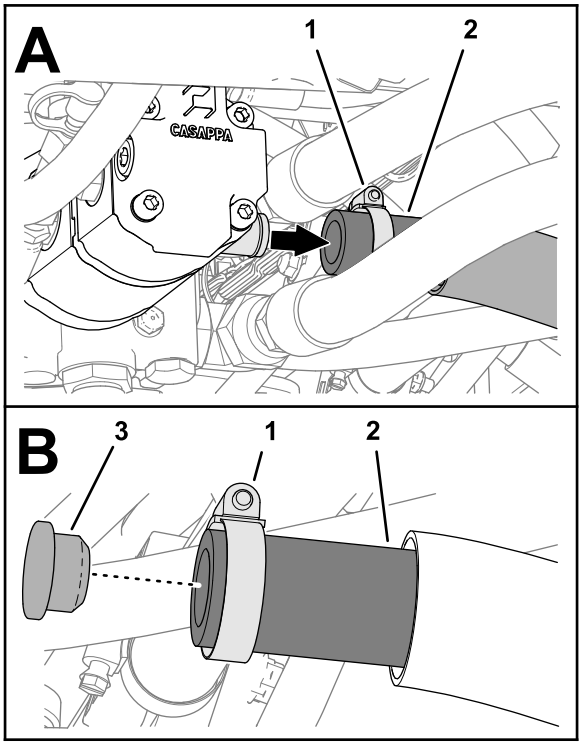

g313935

Figure 43

1. Hose clamp
2. Suction hose
3. Hose plug

3. Remove the suction hose from the barb fitting of the pump and insert the hose plug into the hose (Figure 43).
4. Secure the plug to the hose with the hose clamp.

12

Removing the Steering Wheel and Steering Valve

No Parts Required

Removing the Steering Wheel

1. Remove the cover from the steering wheel (Figure 44).

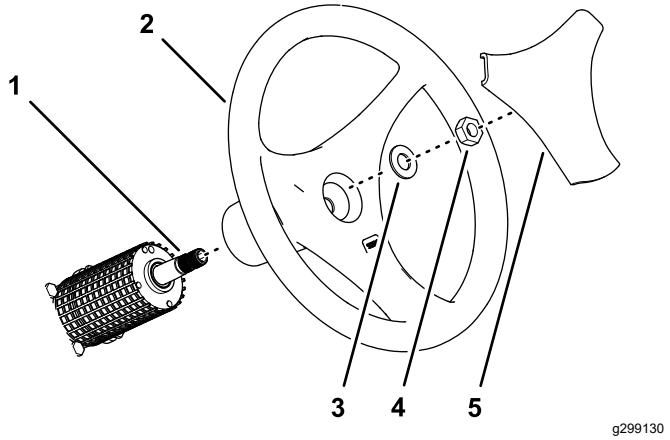

g299130

Figure 44

1. Shaft (steering valve)
2. Steering wheel
3. Washer (5/8 inch)
4. Nut (5/8 inch)
5. Cover

2. Remove the nut (5/8 inch) and washer (5/8 inch) securing the steering wheel to the shaft of the steering valve (Figure 44).
3. Remove the steering wheel from the steering-valve shaft (Figure 44).

   Note: Retain the nut, washer, steering wheel, and cover.

Removing the Valve

1. Remove the 2 capscrews and 2 locknuts that secure the hose guide to the flange of the storage compartment, and remove the guide (Figure 45).

   Note: Discard the capscrews, locknuts, and hose guide.

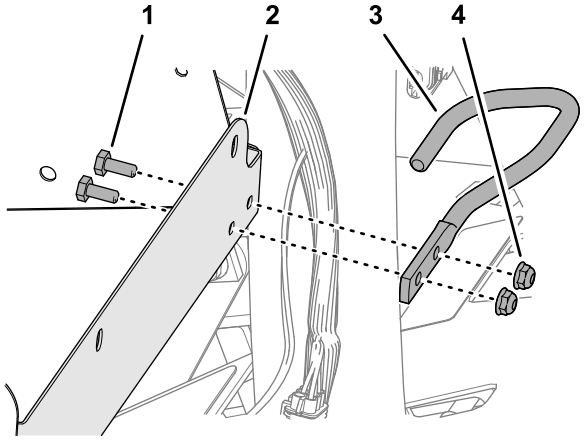

g299614

Figure 45

1. Capscrew
2. Flange (storage compartment)
3. Hose guide
4. Locknut

2. Remove the cable ties that secure the upper and lower covers to the steering hoses, and remove the covers (Figure 46).

   Note: Retain the lower hose cover.

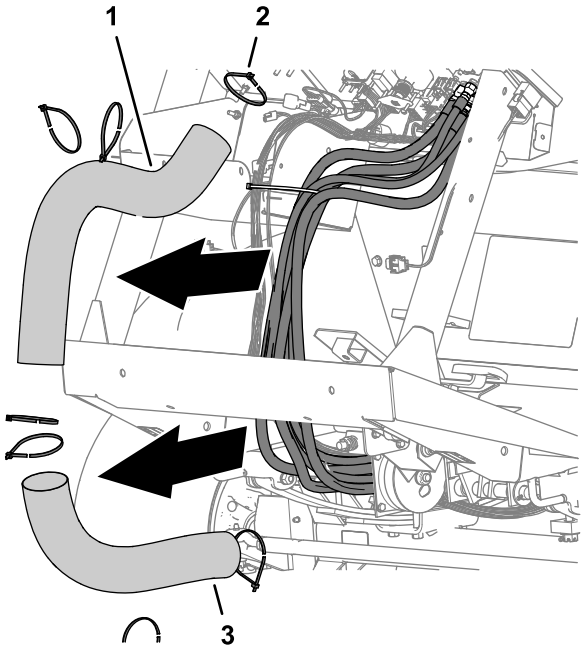

g299126

Figure 46

1. Hose cover (upper)
2. Cable tie
3. Hose cover (lower)

3. Disconnect the 5 steering hoses from the fitting of the steering valve (Figure 47).

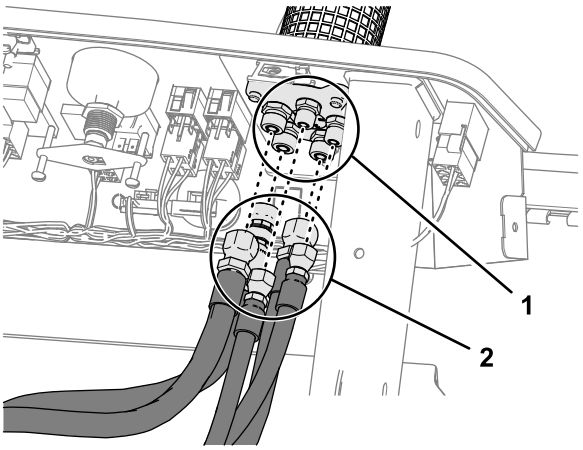

g299128

Figure 47

1. Steering-valve fittings
2. Steering hoses

4. Remove the cable tie that secures the steering hoses to the wire harness of the machine (Figure 48).

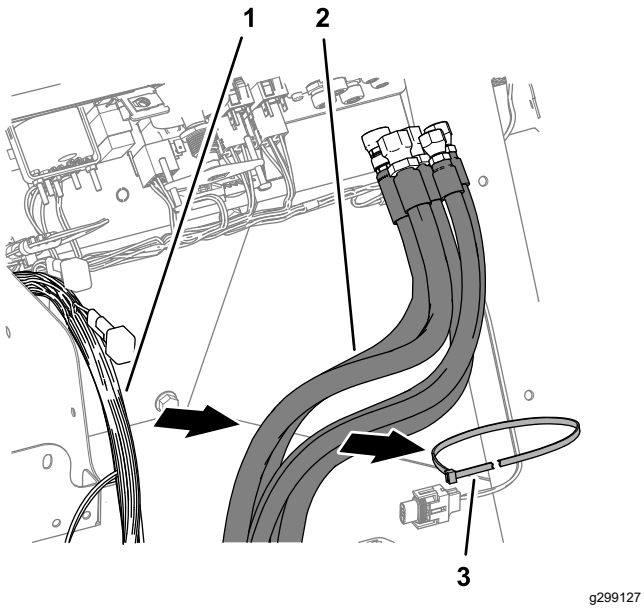

g299127

Figure 48

1. Wire harness (machine)
2. Steering hoses
3. Cable tie

5. Remove the cover from the steering valve (Figure 49).

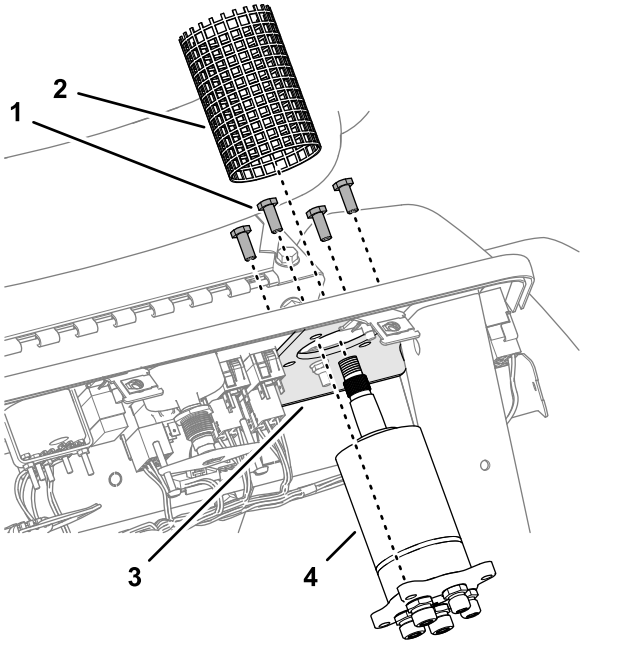

g299129

Figure 49

1. Capscrew (8 x 20 mm)
2. Steering-cover sleeve
3. Steering plate
4. Steering valve

6. Remove the 4 capscrews (8 x 20 mm) that secure the steering valve to the steering plate, and remove the valve from the plate (Figure 49).

Note: You no longer need the old steering valve; retain the steering-cover sleeve and 4 capscrews.

13

Installing the Steering Valve

Parts needed for this procedure:

1	Steering valve

Assembling the Steering Valve

1. Insert the shaft of the new steering valve through the steering plate (Figure 50).

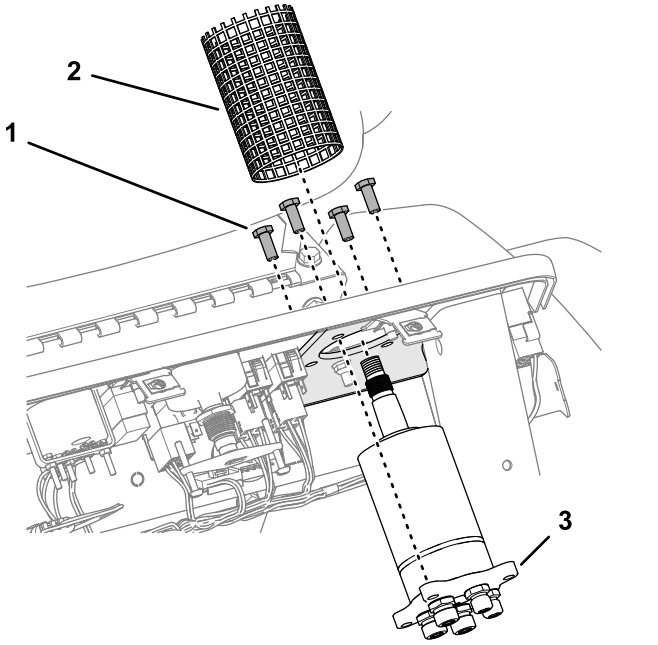

g299625

Figure 50

1. Capscrew (8 x 20 mm)
2. Steering-cover sleeve
3. Steering valve

2. Align the fitting for port R to the 3 o'clock position (Figure 51).

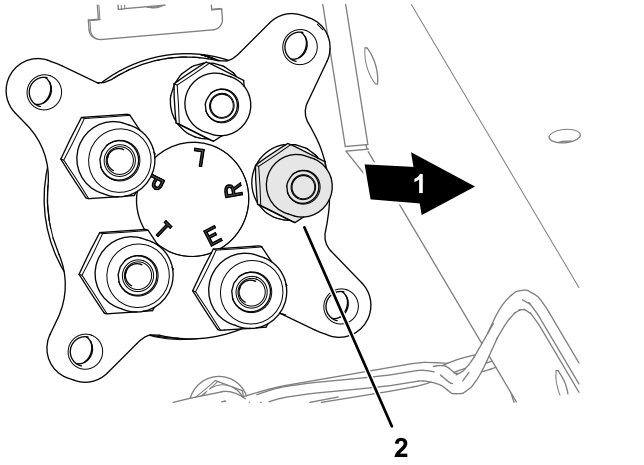

Figure 51

1. Left side of the machine
2. Fitting (port R—3 o'clock position)

3. Secure the valve to the plate (Figure 50) with the 4 capscrew (8 x 20 mm) that you removed in Removing the Valve (page 22).
4. Assemble the steering-cover sleeve over the steering valve (Figure 50).

Installing the Steering Wheel

1. Ensure that the front tires are aligned forward.
2. Apply a light coat of anti-seize compound to the steering valve shaft.
3. Align the large spoke of steering wheel down, and assemble it over the shaft of the steering valve (Figure 52).

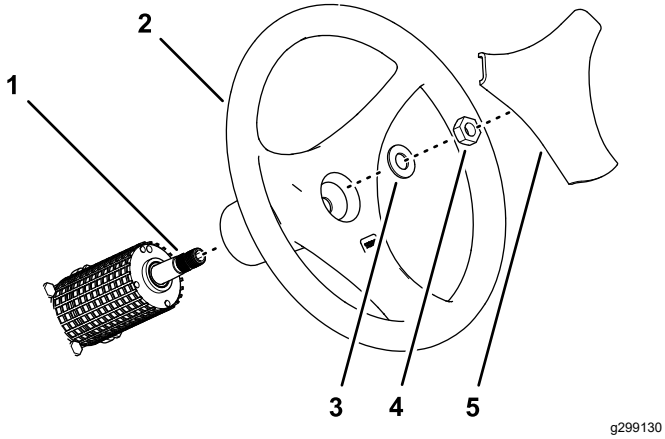

Figure 52

1. Shaft (steering valve)
2. Steering wheel
3. Washer (5/8 inch)
4. Nut (5/8 inch)
5. Cover

4. Assemble the washer (5/8 inch) and nut (5/8 inch) onto the shaft (Figure 52).
5. Torque the nut to 27 to 35 N·m (20 to 26 ft-lb).
6. Assemble the cover onto the steering wheel (Figure 52).

14

Removing the Steering Valve Hoses

Parts needed for this procedure:

1	Cap

Removing the Hose Support Clamps

1. Under the floor plate, remove the nut (1/4 inch), lock washer (1/4 inch), washer (3/8 x 7/8 inch), and capscrew (1/4 x 7/8 inch) that secure the clamp supporting the hydraulic hoses to the clutch plate, and remove the clamp (Figure 53).

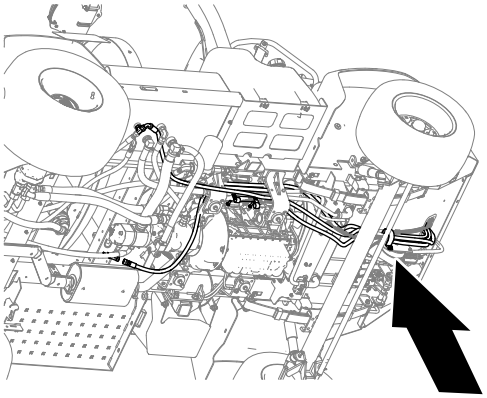

g300044

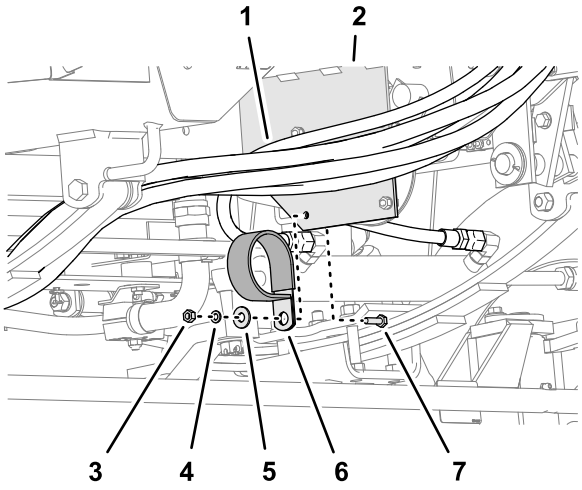

g300053

Figure 53

1. Hydraulic hoses
2. Clutch plate
3. Nut (1/4 inch)
4. Lock washer (1/4 inch)
5. Washer (3/8 x 7/8 inch)
6. Support clamp
7. Capscrew (1/4 x 7/8 inch)

2. At the right side of the machine, remove the flange locknuts (5/16 inch), carriage bolt (5/16 x 1 inch), and carriage bolt (5/16 x 1-1/2 inches) that secure the 2 clamps supporting the return hose of the steering valve to the engine mounts, and remove the clamps (Figure 54).

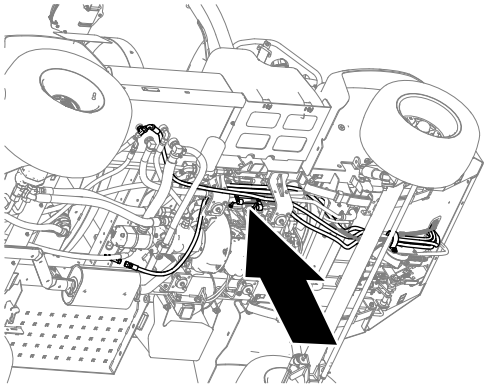

g300043

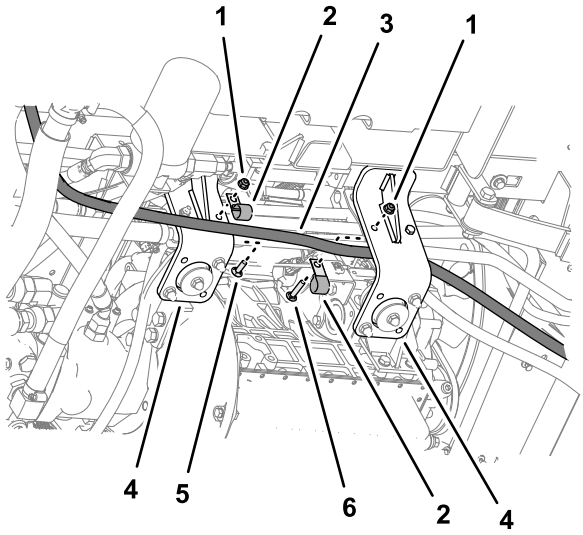

g300247

Figure 54

1. Flange locknut (5/16 inch)
2. Support clamp
3. Return hose (steering valve)
4. Engine mount
5. Carriage bolt (5/16 x 1 inch)
6. Carriage bolt (5/16 x 1-1/2 inches)

3. Remove the 2 flange locknuts (5/16) securing the 2 upper tube-clamp halves as shown in Figure 55, and remove the clamp halves.

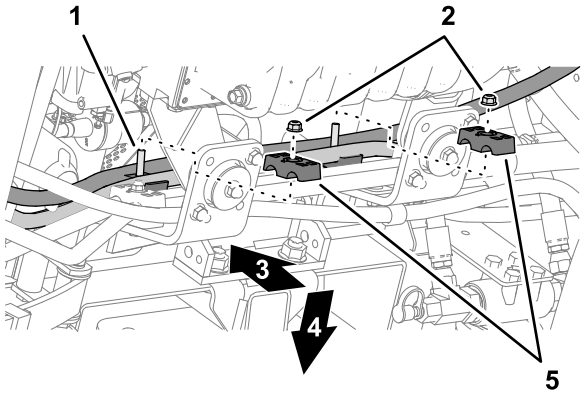

g300246

Figure 55

1. Carriage bolt (5/16 x 2 inches)
2. Flange locknut (5/16 inch)
3. Top of the machine
4. Right side of the machine
5. Tube-clamp half (upper location)

Removing the Return Hose for the Steering Valve

1. Disconnect the return hose for the steering valve from the T-fitting at the bottom of the hydraulic tank (Figure 56).

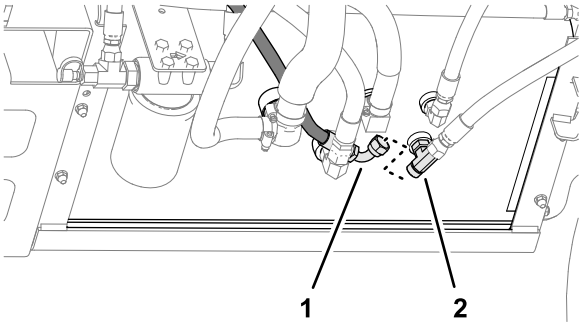

g300051

Figure 56

1. Return hose (steering valve)
2. T-fitting (hydraulic tank)

2. Install the cap onto the T-fitting, as shown in Figure 57.

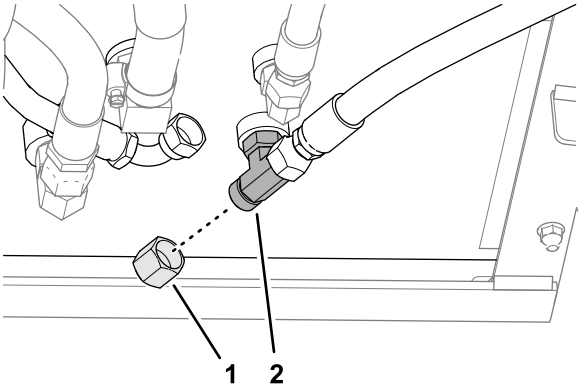

g314043

Figure 57

1. Cap
2. T-fitting (hydraulic tank)

3. Remove the return hose for the steering valve from the machine (Figure 58).

   Note: Discard the return hose.

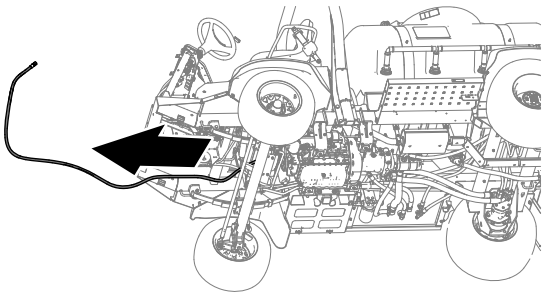

g300052

Figure 58

Removing the Pressure Hose for the Steering Valve

1. Disconnect the pressure hose for the steering valve from the T-fitting at the end of the hydraulic pump.

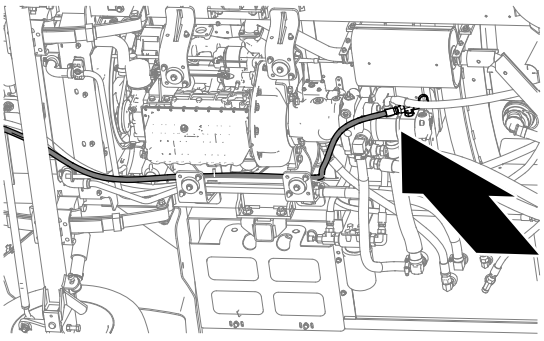

g300042

Figure 59

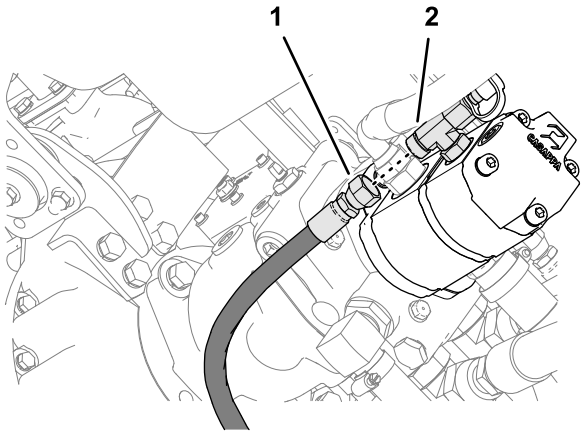

g300050

Figure 60

2. Remove the pressure hose from the machine.

   Note: Discard the pressure hose.

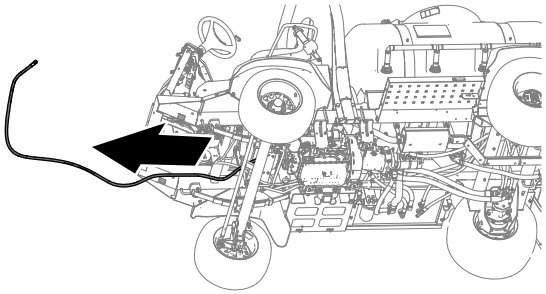

g300052

Figure 61

Removing the Forward Pressure Hose for the Boom-Lift Manifold

1. Disconnect the forward pressure hose for the boom-lift manifold from the straight fitting at the left side of the hydraulic pump (Figure 62).

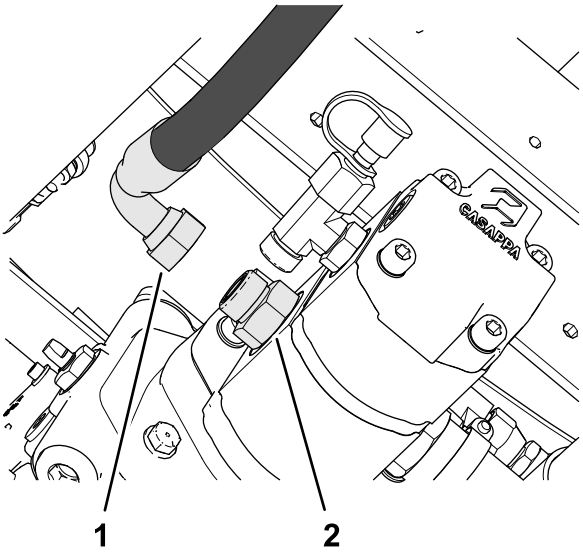

g337847

Figure 62

1. Forward pressure hose (boom-lift manifold)
2. Straight fitting (hydraulic pump)

2. Disconnect the forward-pressure hose for the boom-lift manifold from the bulkhead fitting at the back end of the hydraulic tank (Figure 64).

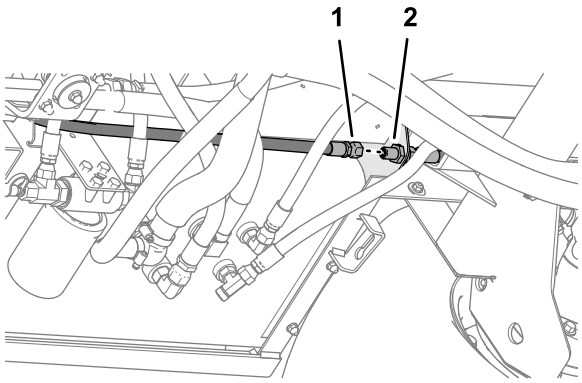

g300047

Figure 63

1. Forward pressure hose (boom-lift manifold)
2. Bulkhead fitting

3. Remove the forward pressure hose from the machine (Figure 64).

   Note: Discard the pressure hose.

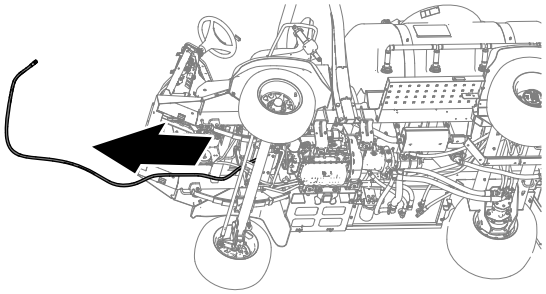

g300052

Figure 64

Removing the Steering Cylinder Hoses

1. Disconnect the steering-cylinder hoses from the 90° fittings in the extend and retract ports of the steering cylinder (Figure 65).

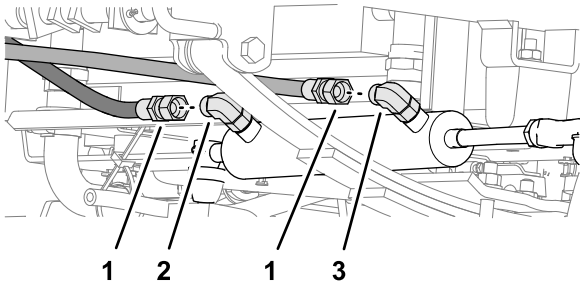

g300049

Figure 65

1. Steering-cylinder hose
2. 90° fitting (extend port—steering cylinder)
3. 90° fitting (retract port—steering cylinder)

2. Remove the steering-cylinder hoses from the machine.

   Note: Discard the steering-cylinder hoses.

15

Installing the EHI Steering Valve

Parts needed for this procedure:

1	Manifold mount
2	Flange-head capscrew (1/4 x 1/2 inch)
2	Washer (1/4 inch)
2	Flange locknut (1/4 inch)
2	U-bolt (3/8 inch)
4	Flange locknut (3/8 inch)
1	Model/serial decal
1	EHI steering valve
2	Straight hydraulic fitting (-6 x 12 mm)
4	Straight hydraulic fitting (-8 x 22 mm)
4	Straight hydraulic fitting (-6 x 18 mm)
3	Flange-head capscrew (8 x 16 mm)

Installing the Manifold Mount

1. Align the manifold mount to the front of the machine as shown in Figure 66.

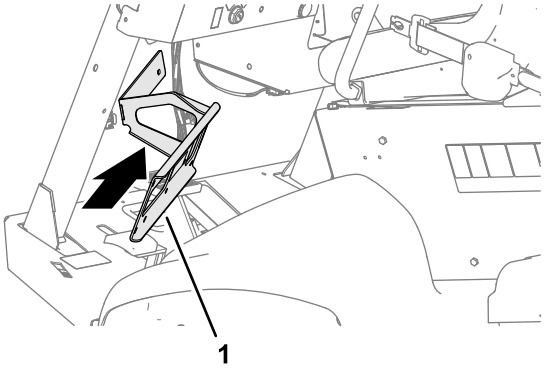

g299717

Figure 66

1. Manifold mount

2. Align the holes in the manifold mount with the slots in the flange of the storage compartment (Figure 67).

   Note: Ensure that the wires harness is not pinched between the mount and the compartment.

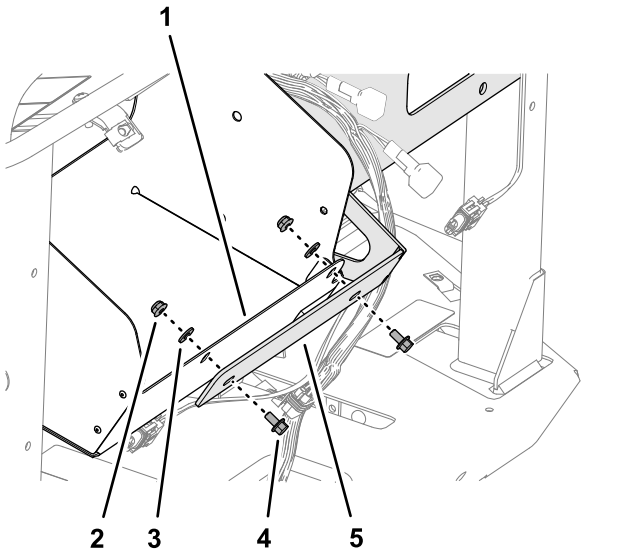

g299721

Figure 67

1. Flange (storage compartment)
2. Flange locknut (1/4 inch)
3. Washer (1/4 inch)
4. Flange-head capscrew (1/4 x 1/2 inch)
5. Manifold mount

3. Loosely assemble the manifold mount to the flange (Figure 67) with 2 flange-head capscrews (1/4 x 1/2 inch), 2 washers (1/4 inch), and 2 flange locknuts (1/4 inch).
4. Loosely assemble the manifold mount to the dash support tube (Figure 68) with 2 U-bolts (3/8 inch) and 4 flange locknuts (3/8 inch).

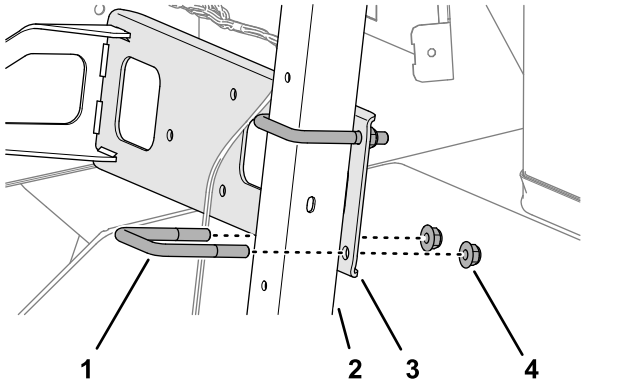

g299723

Figure 68

1. U-bolt (3/8 inch)
2. Dash support tube
3. Manifold mount
4. Flange locknut (3/8 inch)

5. Tighten the capscrews, U-bolts, and locknuts.

Affixing the Model/Serial Decal

1. Remove the backing from the model/serial decal.
2. Affix the decal to the manifold mount as shown in Figure 69.

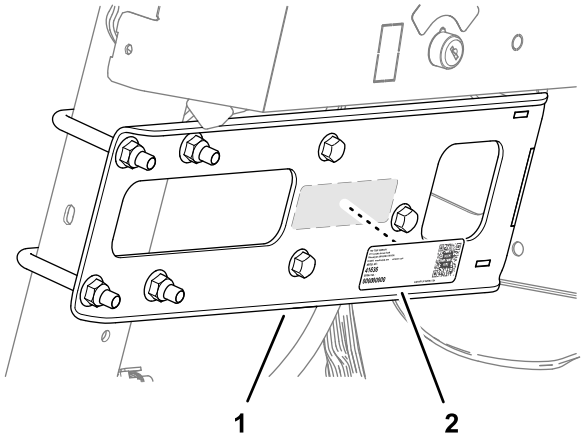

g303489

Figure 69

Preparing the EHI Steering Valve

1. Assemble 2 straight hydraulic fittings (-6 x 12 mm) into the EHI steering valve (Figure 70) as follows:
   - Port LS1
   - Port LS2

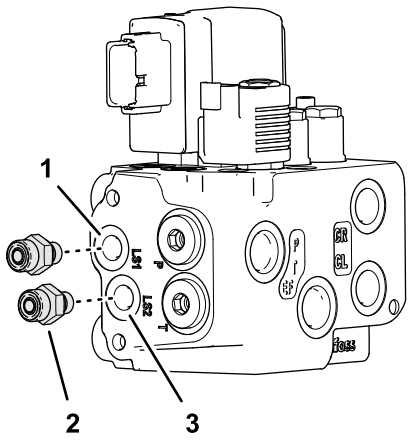

g299718

Figure 70

1. Port LS1 (EHI steering valve)
2. Straight hydraulic fitting (-6 x 12 mm)
3. Port LS2

2. Remove the 2 plugs from port P and port T of the EHI steering valve (Figure 71).

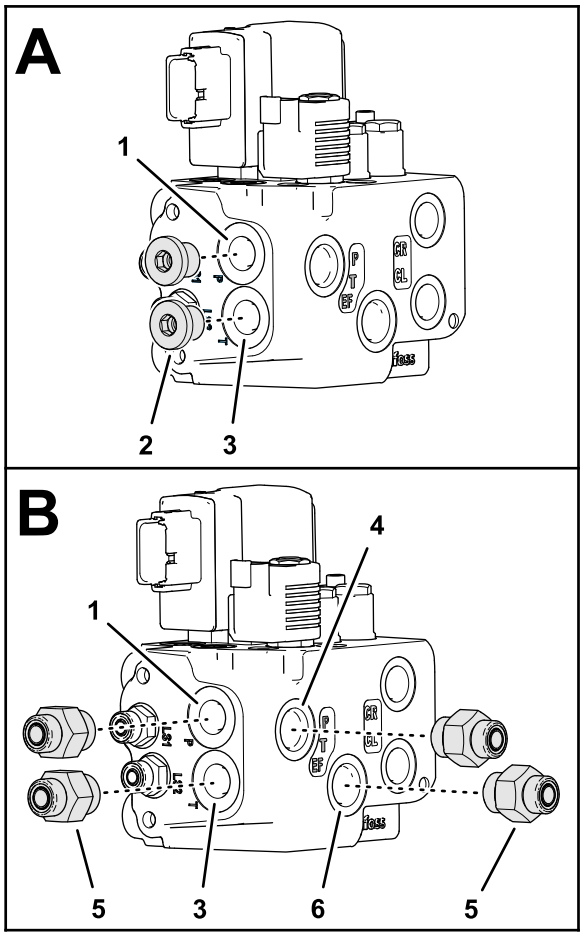

g299720

Figure 71

1. Port P (EHI steering valve)
2. Plug
3. Port T
4. Port P (EF)
5. Straight hydraulic fitting (-8 x 22 mm)
6. Port T (EF)

3. Assemble 4 straight hydraulic fittings (-6 x 22 mm) into the valve (Figure 71) as follows:
   - Port P
   - Port T
   - Port P (EF)
   - Port T (EF)
4. Assemble 4 straight hydraulic fittings (-6 x 18 mm) into the EHI steering valve (Figure 72) as follows:
   - Port CR
   - Port R
   - Port CL
   - Port L

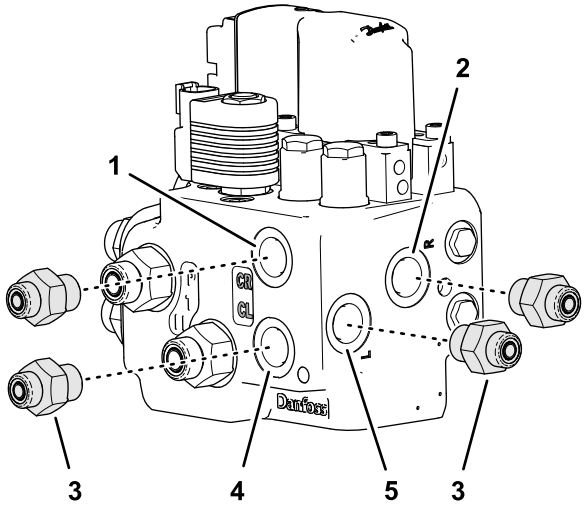

g299719

Figure 72

1. Port CR (EHI steering valve)
2. Port R
3. Straight hydraulic fitting (-6 x 18 mm)
4. Port CL
5. Port L

Installing the EHI Steering Valve

1. Align the holes in the body of the EHI steering valve with the holes in the manifold mount (Figure 73).

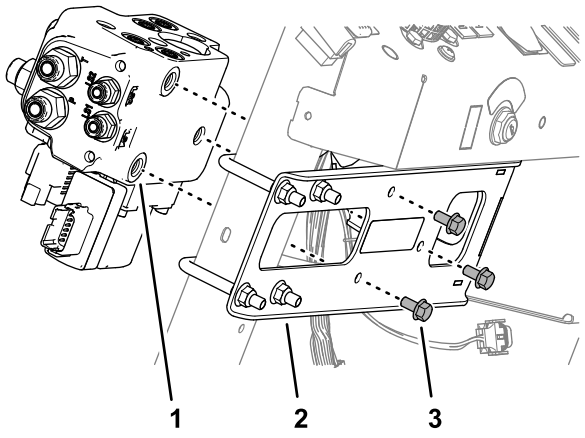

g299722

Figure 73

1. EHI steering valve
2. Manifold mount
3. Flange-head capscrew (8 x 16 mm)

2. Secure the valve to the mount (Figure 73) with 3 flange-head capscrews (8 x 16 mm).

16

Drilling the Console Base

Parts needed for this procedure:

1	Grommet

Procedure

1. Tilt the passenger seat forward to access the console base (Figure 74).

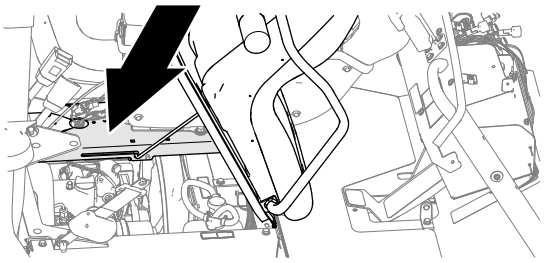

g299797

Figure 74

2. Align a piece of sheet metal, approximately 120 mm (4 inches) wide, through the prop-rod slot in the console base, between the base and the wire harness below it.

   Note: The sheet metal protects the wire harness when you drill through the console base.

3. Measure 69 mm (2-11/16 inches) rearward from the square hole near the prop-rod slot in the console base, and mark the console base (Figure 75).

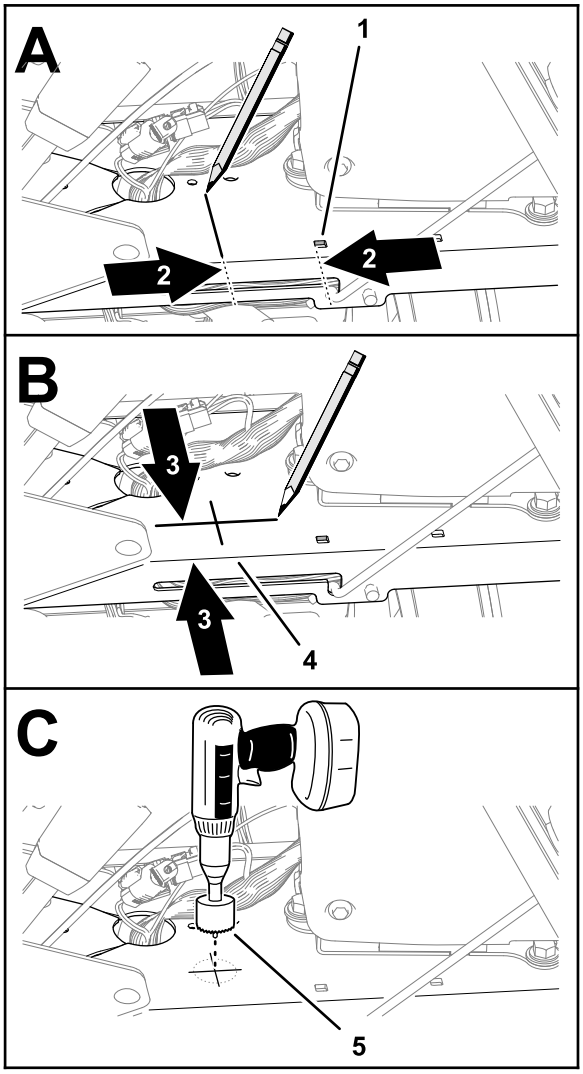

g299798

Figure 75

1. Square hole (above the prop-rod slot)
2. Mark 69 mm (2-11/16 inches)
3. Mark 45 mm (1-3/46 inches)
4. Slotted flange (console base)
5. Drill bit 32 mm (1-1/4 inches)

4. Measure 45 mm (1-3/46 inches) inward from the slotted flange of console base, and mark the console base (Figure 75).
5. Center punch the console base at the intersection of the marks.
6. Drill a hole in the console base at the centerpunch mark with a 32 mm (1-1/4 inches) drill bit (Figure 75).
7. Remove the sheet piece of sheet metal, and remove any burrs around the hole.
8. Install the grommet into the hole (Figure 76).

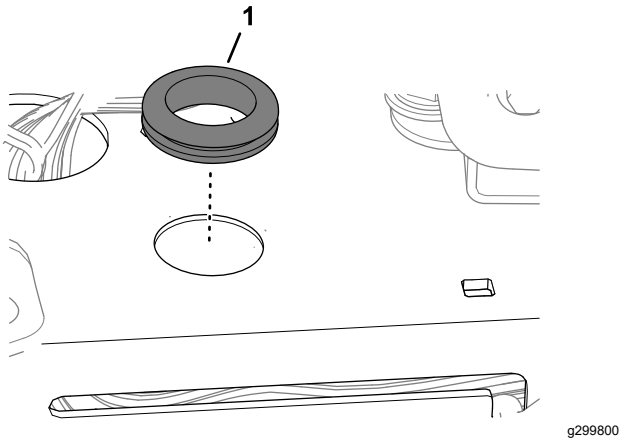

Figure 76

1. Grommet

17

Installing the Electrical Harness

Parts needed for this procedure:

1	2-position switch
1	Transport decal
1	Wire harness
7	Cable tie
1	Fuse (10 A)
1	Push-button switch, jam nut, and lock washer
1	AutoSteer remote-engage decal

Assembling the Road Switch to the Dash

1. Remove the plug in the dash panel as shown in Figure 77.

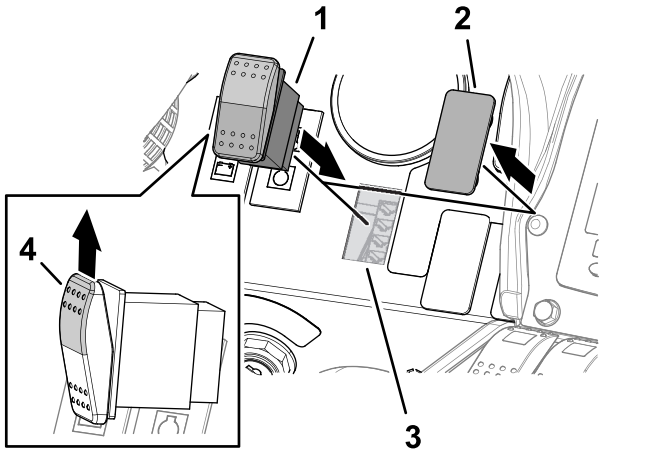

Figure 77

1. 2-position switch
2. Plug
3. Hole (dash panel)
4. Shoulder—aligned (2-position switch)

2. Align the 2-position switch with the shoulder of the switch (Figure 77) aligned to the top of the dash panel.
3. Insert the 2-position switch into the hole in the dash panel (Figure 77).
4. Apply the transport decal over the dash decal as shown in Figure 78.

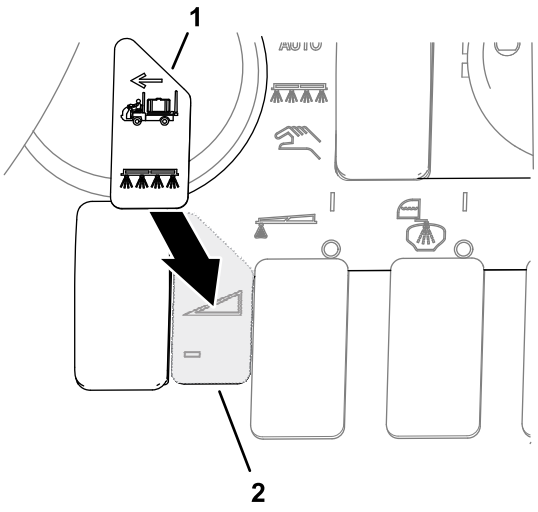

Figure 78

1. Transport decal
2. Dash decal

Routing the Wire Harness at the Dash

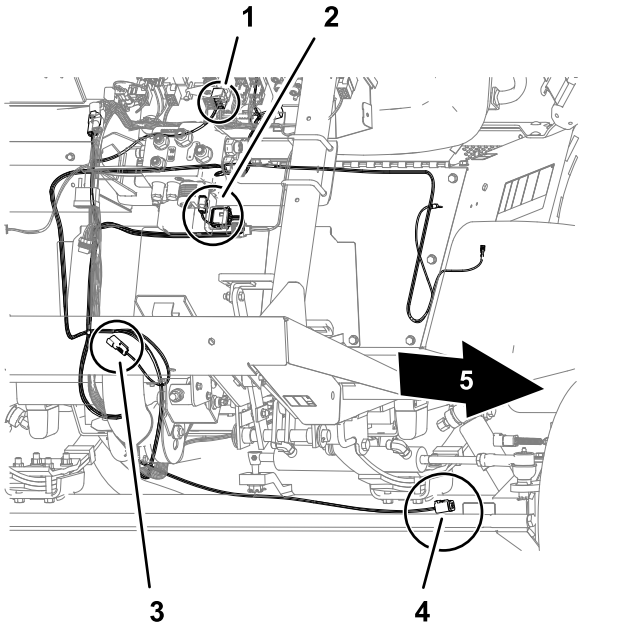

g315010

Figure 79

Harness overview—left

1. ROAD SWITCH connector
2. EHI A KEY (GREY) and EHI SOLENOID CONNECTORS
3. ISOBUS CONNECTOR
4. WHEEL ANGLE SENSOR connector
5. Left side of the machine

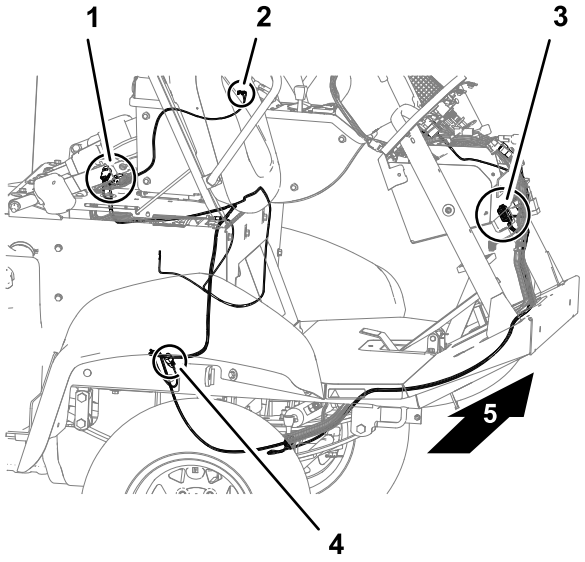

g315011

Figure 80

Harness overview—right

1. TO MACHINE DIAG CONNECTOR and REMOTE ENGAGE SWITCH connectors
2. REMOTE ENGAGE SWITCH terminals
3. EHI A KEY (GREY) and EHI SOLENOID CONNECTORS
4. ISOBUS CONNECTOR
5. Right side of the machine

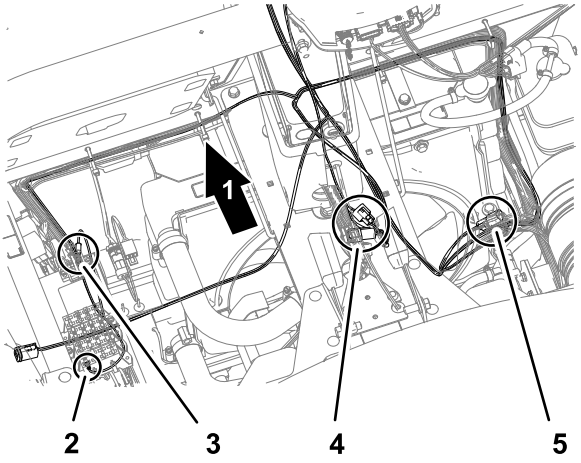

g315012

Figure 81

Harness overview—top

1. Front of the machine
2. SWITCHED PWR terminal
3. GROUND terminal
4. TO MACHINE DIAG CONNECTOR and REMOTE ENGAGE SWITCH connectors
5. ISOBUS CONNECTOR

1. At the front of the machine, route the wire-harness connectors (Figure 82) with the

following labels through the bottom of the floor plate:

- ISOBUS CONNECTOR
- ROAD SWITCH
- EHI SOLENOID
- LABELED EHI A KEY (GREY)

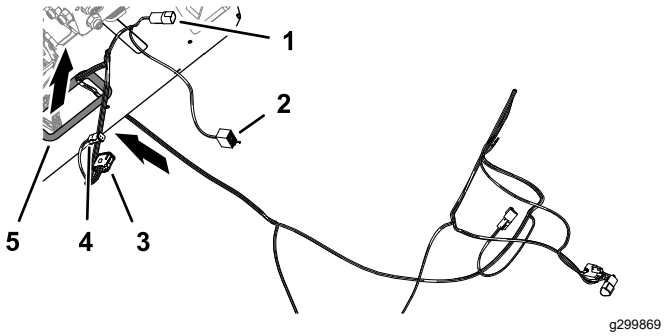

g299869

Figure 82

1. 4-pin connector—wire harness (labeled ISOBUS CONNECTOR)
2. 8-socket connector—wire harness (labeled ROAD SWITCH)
3. 2-socket connector—wire harness (labeled EHI SOLENOID)
4. 12-socket connector—wire harness (labeled EHI A KEY (GREY))
5. Grommet (floor plate)

2. Plug the 12-socket wire-harness connector labeled EHI A KEY (GREY) into the 12-pin connector of the EHI steering-valve (Figure 83).

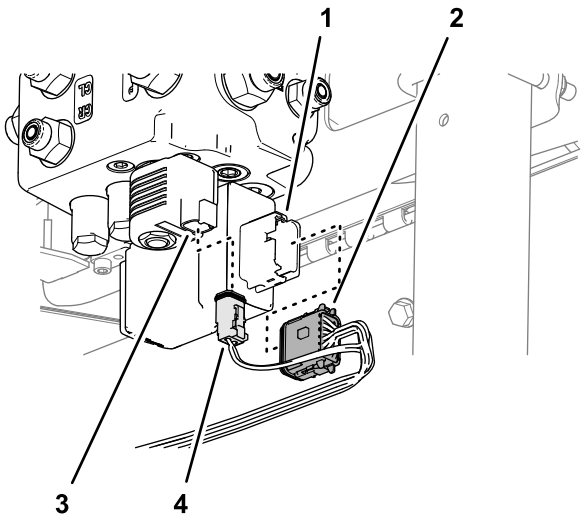

g299867

Figure 83

1. 12-pin EHI steering-valve connector
2. 12-socket connector—wire harness (labeled EHI A KEY (GREY))
3. 2-pin EHI-solenoid connector
4. 2-socket connector—wire harness (labeled EHI SOLENOID)

3. Plug the 2-socket wire-harness connector labeled EHI SOLENOID into the 2-pin connector of the EHI-solenoid (Figure 83).
4. Remove the cap from the 4-socket connector GeoLink wire harness labeled CAN 1 ISOBUS (Figure 84).

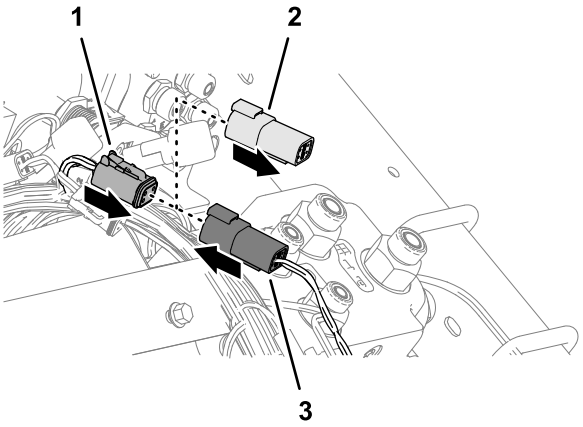

g299922

Figure 84

1. 4-socket connector (labeled CAN 1 ISOBUS)
2. Cap
3. 4-pin connector (labeled ISOBUS CONNECTION)

5. Plug the 4-pin connector of the kit wire harness labeled ISOBUS CONNECTION into the 4-socket connector labeled CAN 1 ISOBUS (Figure 84).
6. Plug the 8-socket connector of the kit wire harness labeled ROAD SWITCH (Figure 85) into the 2-position switch that you installed in Assembling the Road Switch to the Dash (page 32).

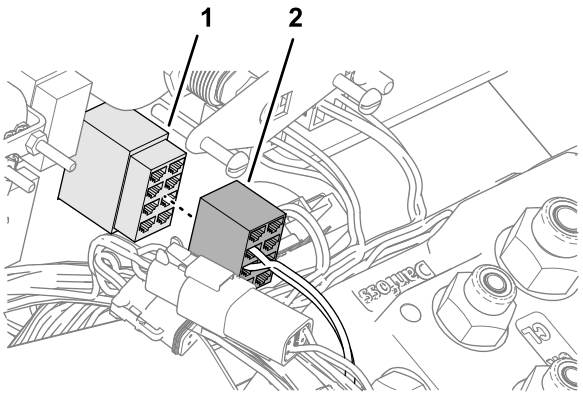

g299921

Figure 85

1. 2-position switch
2. 8-socket connector (labeled ROAD SWITCH)

Routing the Wire Harness Under the Operator's Platform

1. Route the wire harness for the kit rearward, along the wire harness for the machine (Figure 86).

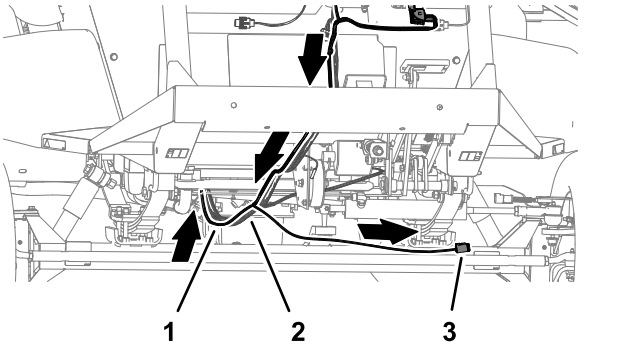

g301673

Figure 86

1. Kit wire harness
2. Machine wire harness
3. Wheel angle sensor branch (kit wire harness)

2. Route the wire harness branch with the connector labeled WHEEL ANGLE SENSOR along the back of the front axle tube (Figure 86).
3. At the bottom, back side of the radiator, route the wire harness up, along the machine wire harness (Figure 87).

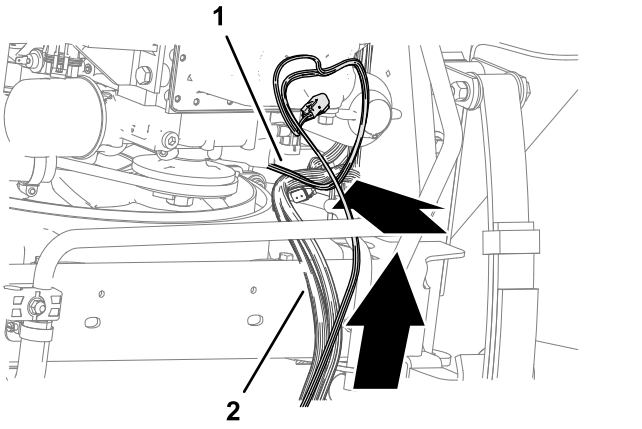

g301676

Figure 87

1. Kit wire harness
2. Machine wire harness

Connecting the Wheel Angle Sensor

1. Plug the 6-pin connector of the angle-sensor harness into the 6-socket connector of the kit wire harness labeled WHEEL ANGLE SENSOR (Figure 88).

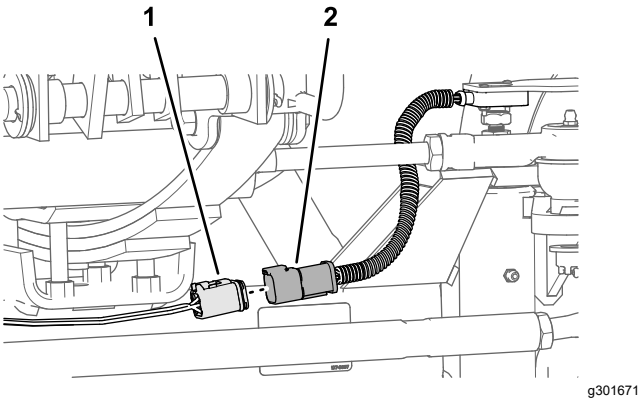

g301671

Figure 88

1. 6-socket connector (labeled WHEEL ANGLE SENSOR—kit wire harness)
2. 6-pin connector (angle-sensor harness)

2. Secure the harness of the wheel angle sensor and the angle-sensor branch of the kit wire harness to the axle tube with 2 cable ties.

Connecting the Wire Harness to the Ground Block and Fuse Block

1. Route the wire harness branch with the terminals labeled GROUND and SWITCHED PWR across the top of the radiator, along the machine wire harness (Figure 89).

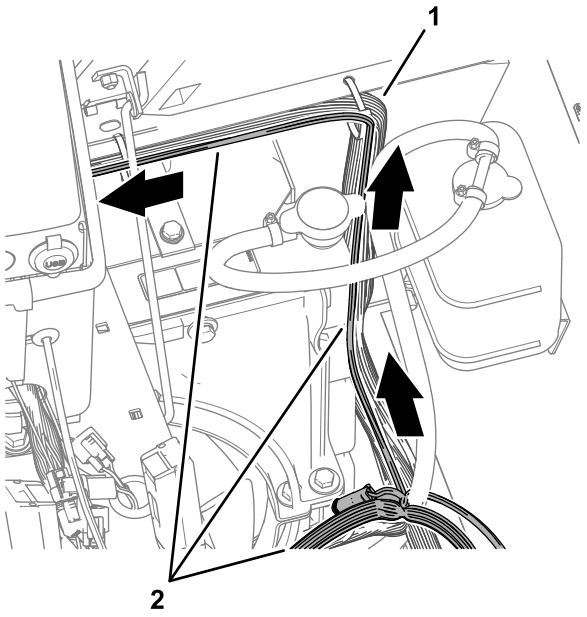

g301675

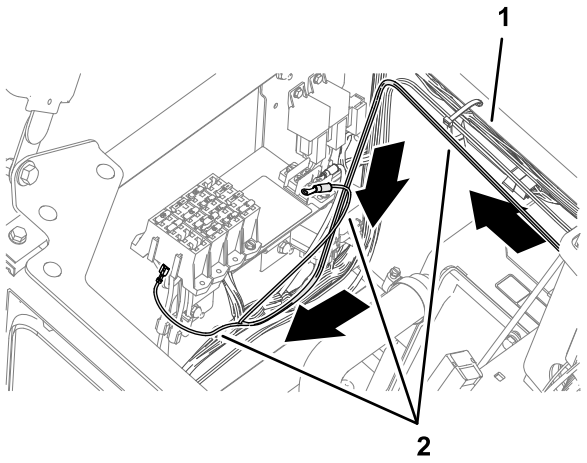

g301795

Figure 89

1. Machine wire harness
2. Kit wire harness (switched power and ground branch)

2. Remove a terminal screw from the ground block (Figure 90).

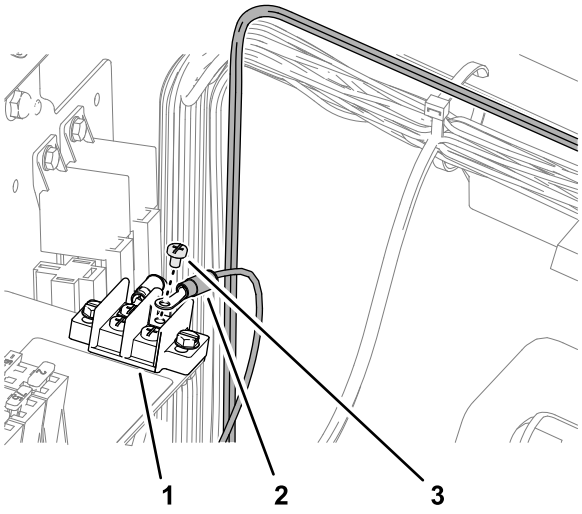

g301674

Figure 90

1. Ground block
2. Ring terminal (labeled GROUND—kit wire harness)
3. Terminal screw

3. Assemble the ring terminal of the kit wire harness labeled GROUND to the ground block with the terminal screw (Figure 90).
4. Plug the terminal of the kit wire harness labeled SWITCHED PWR into the blade connector for options power of the fuse block (Figure 91).

   Note: If the fuse block of your machine does not have an available options-power circuit, install an additional options-fuse block; refer to your authorized Toro distributor.

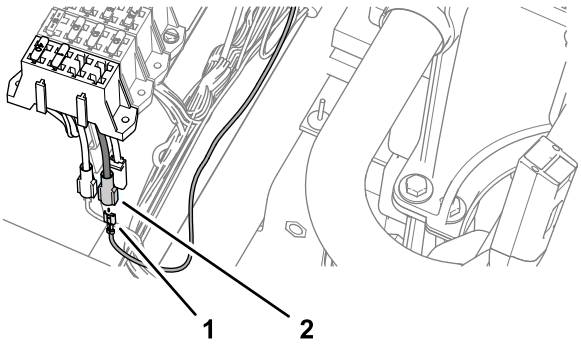

g301670

Figure 91

1. Terminal (labeled SWITCHED PWR—kit wire harness)
2. Blade connector (options power—fuse block)

5. Insert the fuse (10 A) into the fuse-block socket (Figure 92) for the options power circuit that you used in step 4.

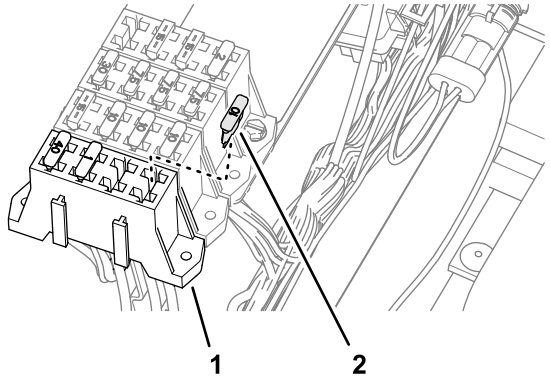

g301672

Figure 92

1. Fuse block
2. Fuse (10 A)

6. Secure the switched power and ground branch of the kit wire harness to the machine wire harness with 4 cable ties.

Connecting the Remote Engage Connectors

Plug the 2-pin connector of the kit wire harness labeled REMOTE ENGAGE CONNECTOR into the 2-socket connector of the GeoLink wire harness labeled REMOTE ENGAGE (Figure 93).

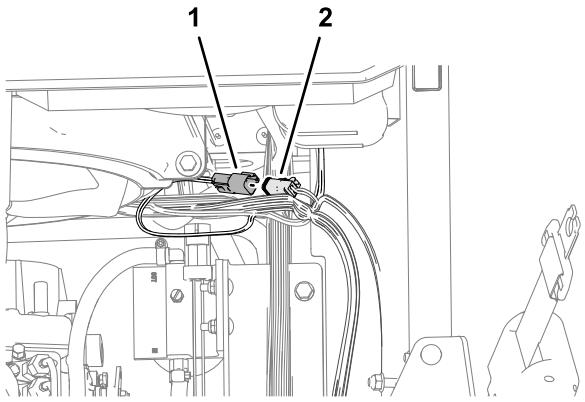

g301669

Figure 93

1. 2-pin connector (labeled REMOTE ENGAGE CONNECTOR—kit wire harness)
2. 2-socket connector (labeled REMOTE ENGAGE—GeoLink wire harness

Removing the Armrest

1. Remove 4 flange-head capscrews (1/4 x 3/4 inch) that secure the side panel of the center console as shown in Figure 94.

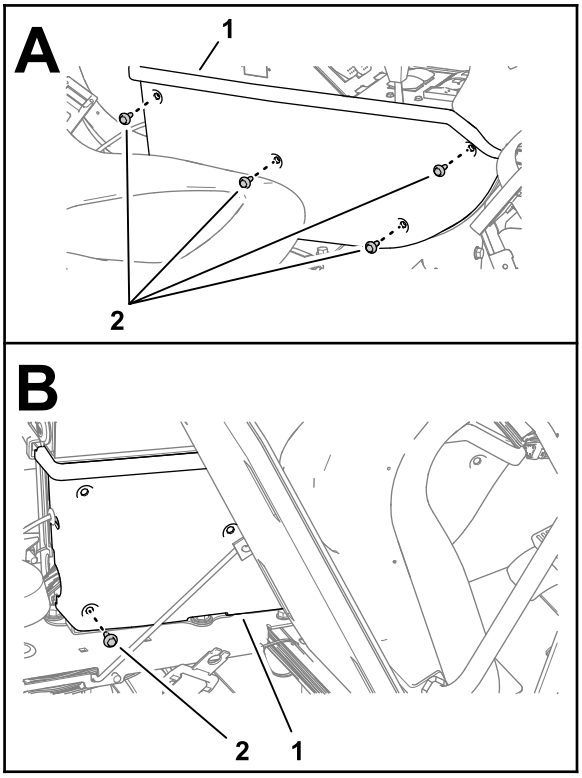

g301406

Figure 94

1. Side panel
2. Flange-head capscrews (1/4 x 3/4 inch)

2. Tilt the seat forward, and remove the lower rear flange-head capscrew (Figure 94).
3. Repeat steps 1 and 2 at the other side of the center console.
4. Remove the flange-head capscrew (5/16 x 5/8 inch) that secures the arm panel to the console frame (Figure 95).

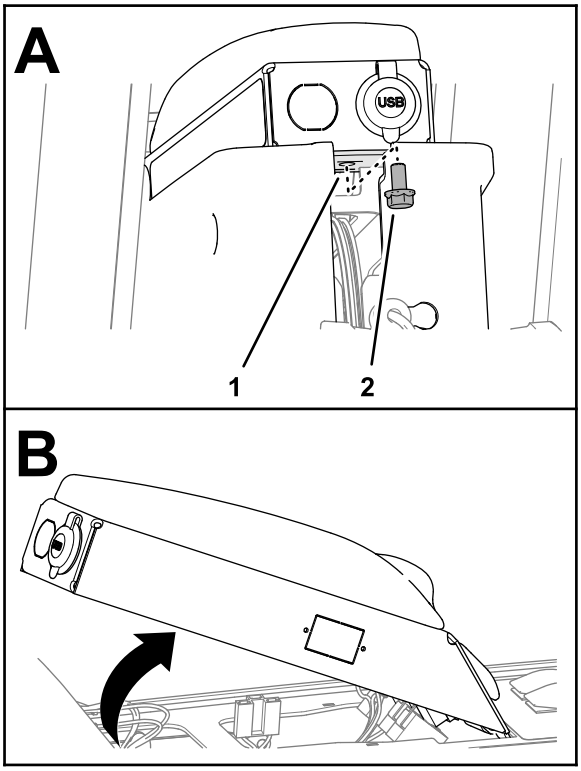

g301405

Figure 95

1. Hole (console frame)
2. Flange-head capscrew (5/16 x 5/8 inch)

5. Lift the arm panel from the frame (Figure 95).

Drilling a Hole in the Armrest

1. Measure 260 mm (10-1/4 inches) from the back end of the arm panel, and mark the panel (Figure 96).

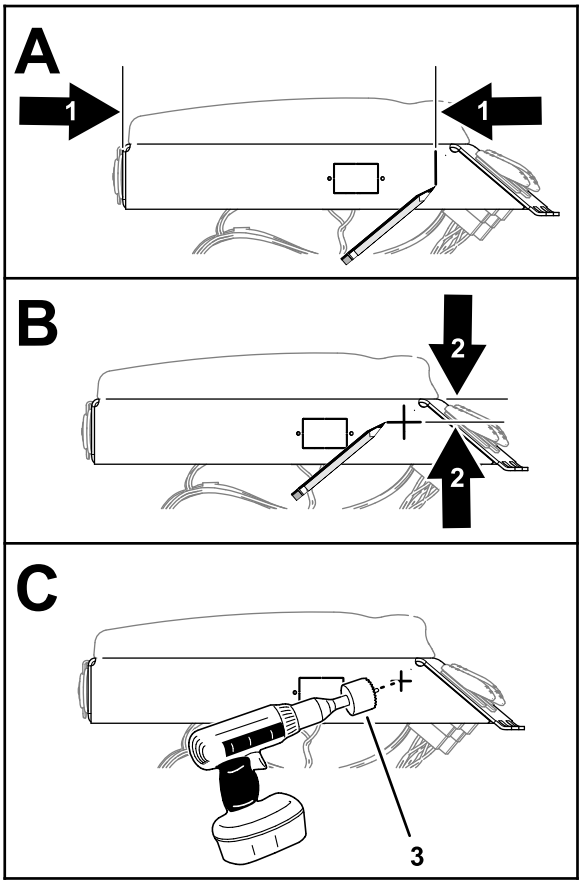

g301404

Figure 96

1. 260 mm (10-1/4 inches) measurement
2. 35 mm (1-3/8 inches) measurement
3. Drill bit 17 mm (11/16 inch)

2. Measure 35 mm (1-3/8 inches) from the top of the arm panel, and mark the panel (Figure 96).
3. Center punch the intersection of the marks.
4. Protect the wire in the arm panel.
5. Drill a 17 mm (11/16 inch) hole in the arm panel at the centerpunch mark (Figure 96).
6. Remove any burrs from the hole.

Assembling the Push-Button Switch to the Armrest

1. Insert the push-button switch into the hole in the arm panel (Figure 97).

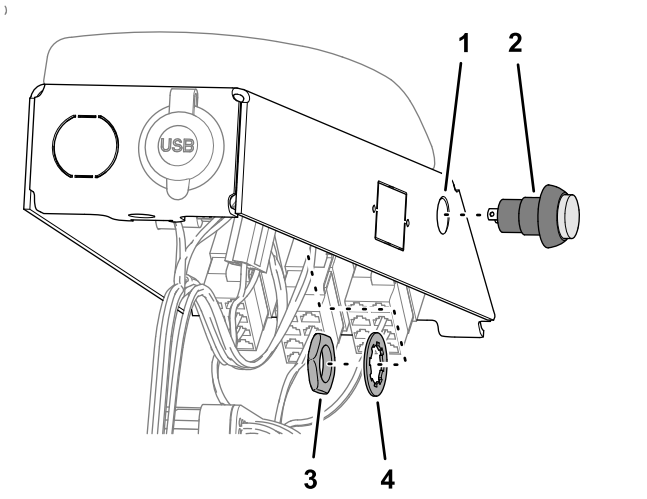

Figure 97

1. Hole (arm panel)
2. Push-button switch
3. Jam nut
4. Lock washer

2. Secure the switch to the panel with the lock washer and jam nut that came with the switch (Figure 97).

Routing the Wire Harness to the Remote Engage Switch

1. Route the wire harness branch labeled REMOTE ENGAGE SWITCH through the grommet (Figure 98) that you installed in 16 Drilling the Console Base (page 30).

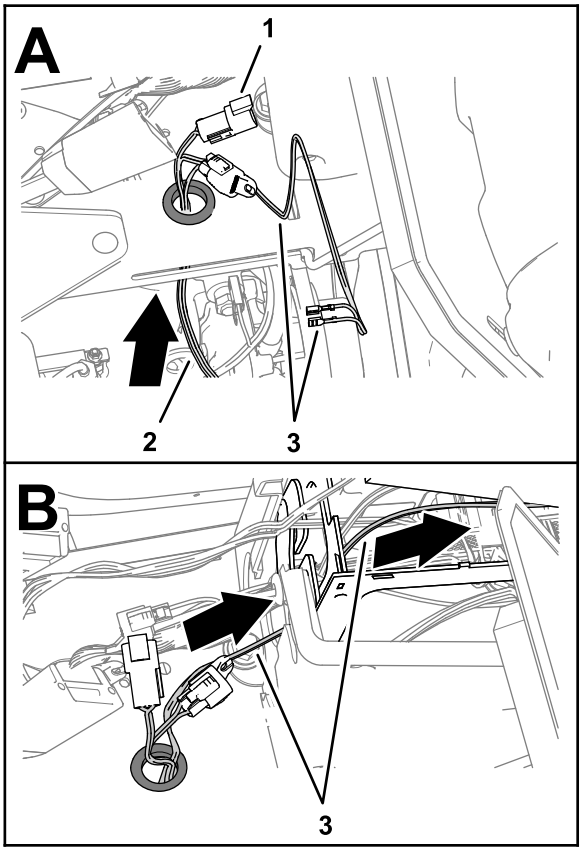

Figure 98

1. 3-pin connector (labeled TO MACHINE DIAG CONNECTOR)
2. Wire harness branch—89 cm (35 inches)
3. Wire harness branch labeled REMOTE ENGAGE SWITCH

2. Route the wire harness branch labeled REMOTE ENGAGE SWITCH) into the center console (Figure 98).
3. Route the wire harness branch labeled REMOTE ENGAGE SWITCH) toward the arm panel (Figure 99).

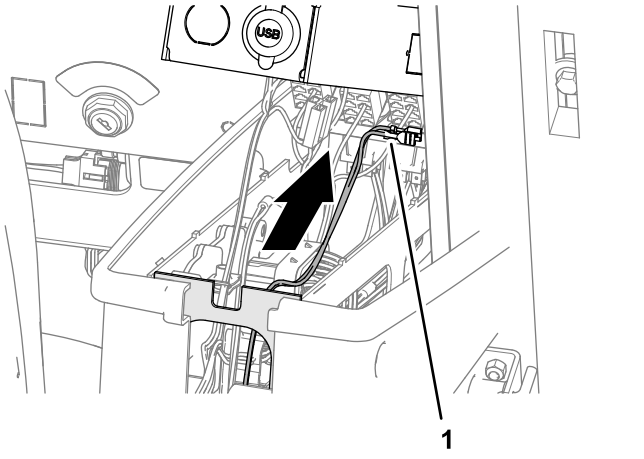

g301407

Figure 99

1. Wire harness branch labeled REMOTE ENGAGE SWITCH

4. Assemble the terminals of the wire harness branch labeled REMOTE ENGAGE SWITCH) onto the terminals of the push-button switch (Figure 100).

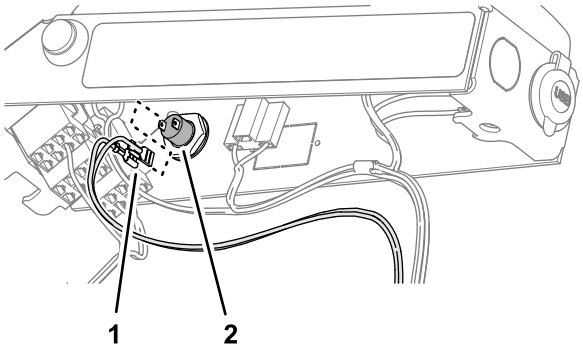

g301403

Figure 100

1. Terminals (wire harness branch labeled REMOTE ENGAGE SWITCH)
2. Push-button switch

5. Secure the wire harness branch to the machine wire harness with a cable tie.

Assembling the Arm Panel to the Console Frame

1. Align the tabs at the front of the arm panel with the slots in the console frame, and rotate the arm pane down (Figure 101).

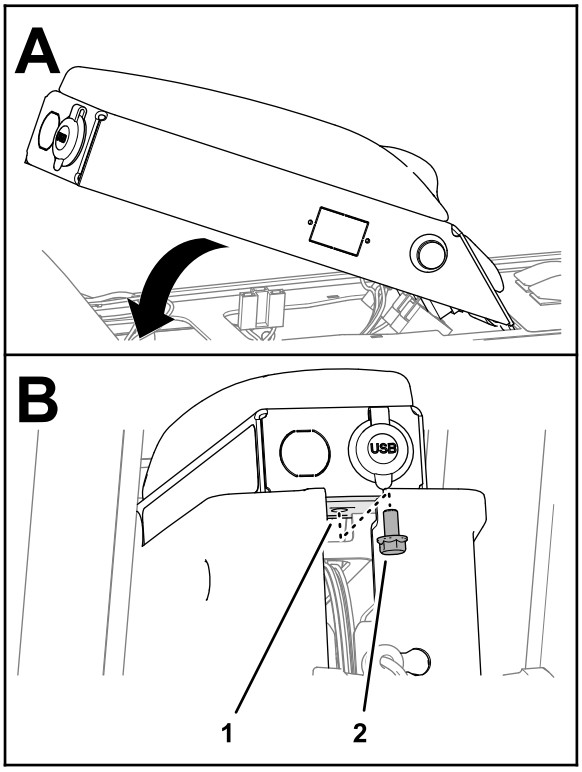

g301409

Figure 101

1. Console frame
2. Flange-head capscrew (5/16 x 5/8 inch)

2. Secure the arm panel to the console frame (Figure 101) with the flange-head capscrew (5/16 x 5/8 inch).
3. Assemble the side panel to the console frame (Figure 102) with 4 flange-head capscrews (1/4 x 3/4 inch).

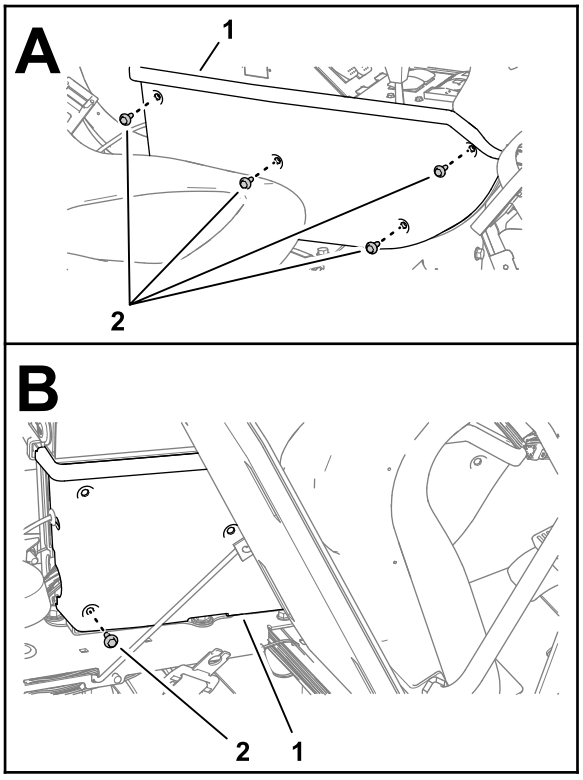

g301406

Figure 102

1. Side panel
2. Flange-head capscrews (1/4 x 3/4 inch)

4. Tilt the seat forward and install the lower rear flange-head capscrew (Figure 102).
5. Repeat steps 3 and 4 at the other side of the center console.
6. Affix the AutoSteer remote-engage decal to the arm panel as shown in Figure 103.

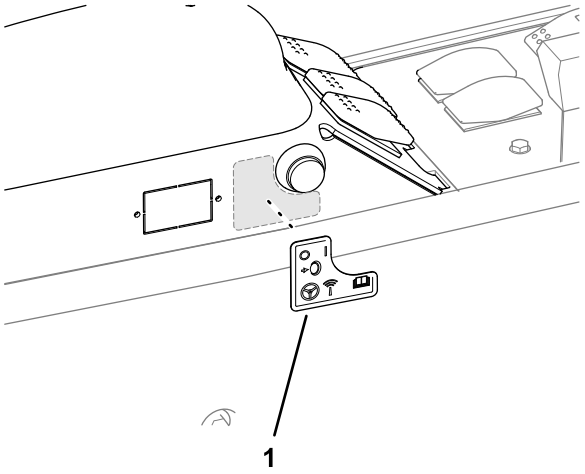

g301794

Figure 103

1. AutoSteer remote-engage decal

18

Replacing the Hydraulic Pump

Parts needed for this procedure:

2	O-ring 1.6/1.8 mm (0.489 /0.070 inch)
1	O-ring 15.6/1.8 mm (0.614/0.070 inch)
1	O-ring 29.7/2.9 mm (1.171/0.116 inch)
1	O-ring 16.4/2.3 mm (0.644/0.090 inch)
1	Hydraulic pump
1	Straight fitting (7/8 x 13/16 inch)
1	Straight fitting (1/4 x 1/4 inch)
1	O-ring 85.7/ mm (3.375/0.630 inch)

Removing the Hydraulic Pump

1. Disconnect the pressure hose for the spray-pump motor from the straight fitting in the left side of the hydraulic pump (Figure 104).

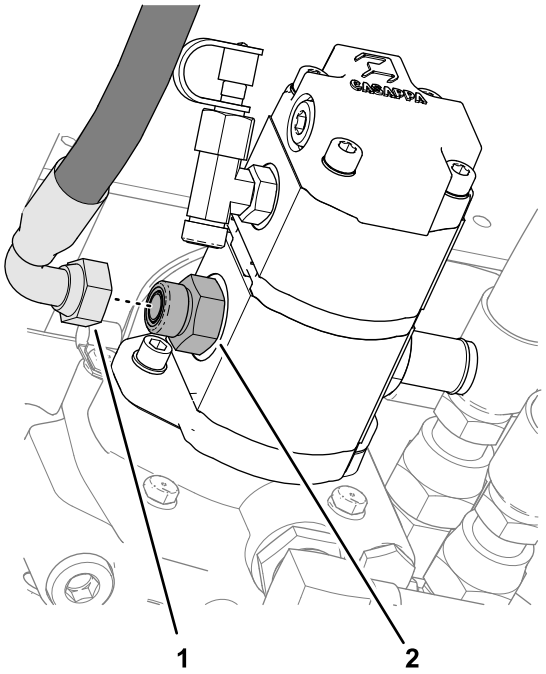

g300046

Figure 104

1. Pressure hose (spray-pump motor)
2. Straight fitting (hydraulic pump)

2. Remove the 2 socket-head screws (3/8 x 1 inch) and 2 washers (3/8 inch) that secure the hydraulic pump to the traction pump, and remove the hydraulic pump (Figure 105).

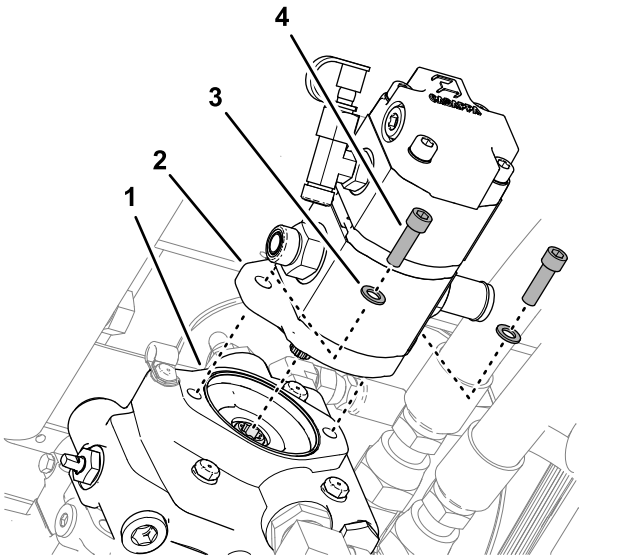

g300045

Figure 105

1. Traction pump
2. Hydraulic pump
3. Washer (3/8 inch)
4. Socket-head screw (3/8 x 1 inch)

Removing the Hydraulic Fittings from the Pump

1. Remove the straight fitting from the hydraulic pump (Figure 106).

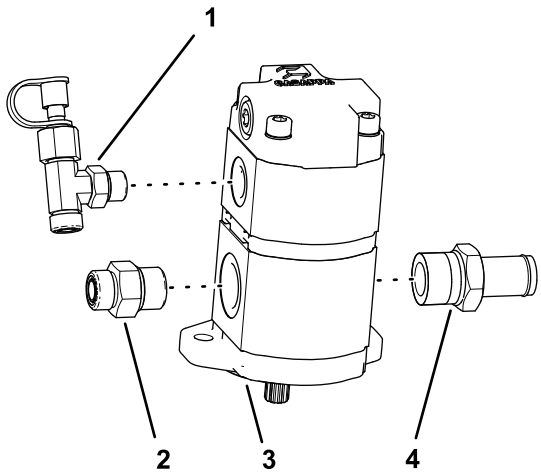

g300272

Figure 106

1. T-fitting, test fitting, and cap
2. Straight fitting (5/8 x 3/4 inch)
3. Hydraulic pump
4. Barb fitting

2. Remove the T-fitting (with test fitting and cap) from the hydraulic pump (Figure 106).
3. Remove the barb fitting from the hydraulic pump (Figure 106).

Note: You no longer need to old hydraulic pump.

Replacing the Hydraulic Fitting O-rings

1. Working with the 3 hydraulic fittings that you removed in Removing the Hydraulic Fittings from the Pump (page 42), remove the 5 O-rings shown in Figure 107.

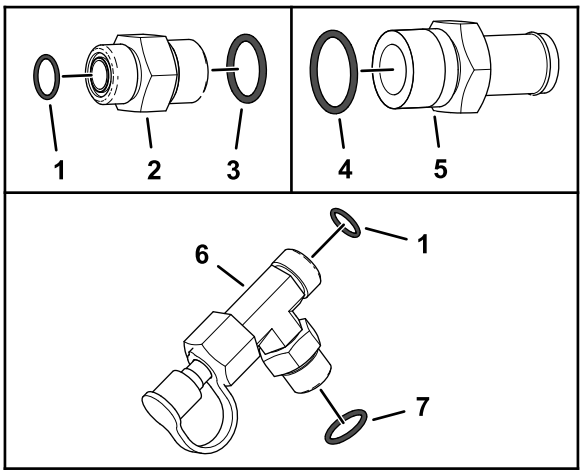

g313964

Figure 107

1. O-ring 1.6/1.8 mm (0.489 /0.070 inch)
2. Straight fitting (5/8 x 3/4 inch)
3. O-ring 15.6/1.8 mm (0.614/0.070 inch)
4. O-ring 29.7/2.9 mm (1.171/0.116 inch)
5. Barb fitting
6. T-fitting, test fitting, and cap
7. O-ring 16.4/2.3 mm (0.644/0.090 inch)

2. Install a new O-ring 7.6/1.8 mm (0.301/0.070 inch) and O-ring 15.6/1.8 mm (0.614/0.070 inch) into the grooves of the straight fitting (5/8 x 3/4 inch) as shown in Figure 107.
3. Install a new O-ring 29.7/2.9 mm (1.171/0.116 inch) into the groove of the barb fitting (Figure 107).
4. Install a new O-ring 7.6/1.8 mm (0.301/0.070 inch) and O-ring 16.4/2.3 mm (0.644/0.090 inch) into the grooves of the T-fitting (Figure 107).

Preparing the Hydraulic Pump

1. Install the T-fitting, test fitting, and cap that you removed in step 2 of Removing the Hydraulic Fittings from the Pump (page 42)into the top, right port of the new hydraulic pump (Figure 108).

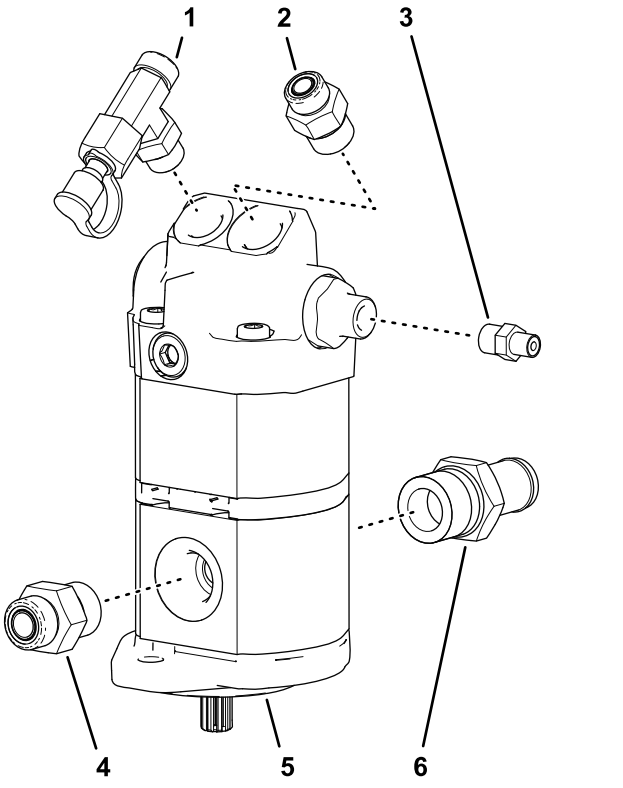

Figure 108

1. T-fitting, test fitting, and cap
2. Straight fitting (7/8 x 13/16 inch)
3. Straight fitting (1/4 x 1/4 inch)
4. Straight fitting (5/8 x 3/4 inch)
5. Front cover (hydraulic pump)
6. Barb fitting

2. Install the straight fitting (7/8 x 13/16 inch) into the top, left port of the hydraulic pump (Figure 108).
3. Torque the straight fitting to 134 to 164 N·m (99 to 121 ft-lb).
4. Install the straight fitting (1/4 x 1/4 inch) into the port fitting of the hydraulic pump, as shown in Figure 108.
5. Install the straight fitting (5/8 x 3/4 inch) into the body of the hydraulic pump, as shown in Figure 108.
6. Torque the straight fitting to 110 to 134 N·m (81 to 99 ft-lb).
7. Install the barb fitting into the body of the hydraulic pump (Figure 108).
8. Torque the barb fitting to 164 to 202 N·m (121 to 149 ft-lb).

Installing the Hydraulic Pump

1. Assemble an O-ring 85.7/ mm (3.375/0.630 inch) over the onto the front cover of the hydraulic pump (Figure 109).

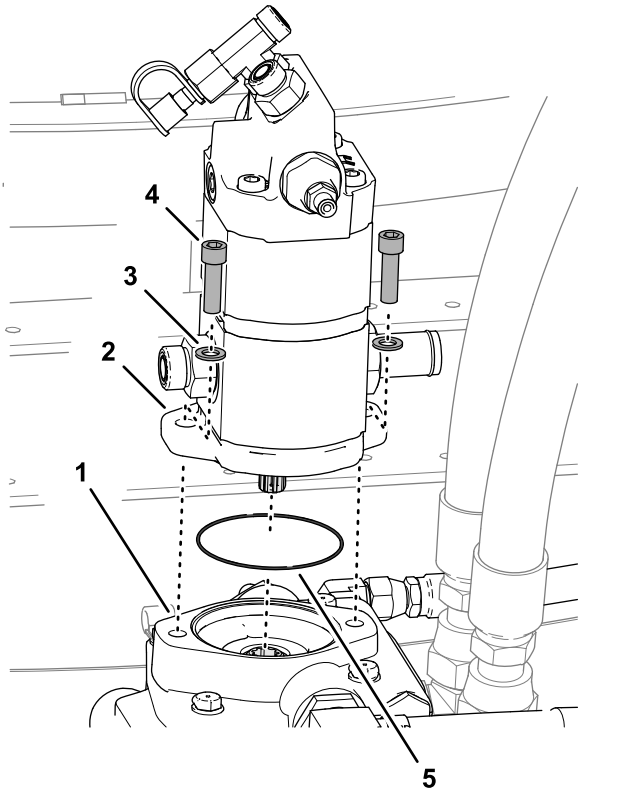

Figure 109

1. Traction pump
2. Front cover (hydraulic pump)
3. Washer (3/8 inch)
4. Socket-head screw (3/8 x 1 inch)
5. O-ring 85.7/ mm (3.375/0.630 inch)

2. Align the drive-shaft splines of the hydraulic pump with the coupling splines of the traction pump, and insert the drive shaft into the coupling (Figure 109).
3. Assemble the hydraulic pump to the traction pump with the 2 socket-head screws (3/8 x 1 inch) and 2 washers (3/8 inch) that you removed in Removing the Hydraulic Pump (page 41).
4. Torque the socket-head screws to 37 to 42 N·m (27 to 31 ft-lb).
5. Assemble the pressure hose for the spray-pump motor to the straight fitting, and tighten the hose fitting (Figure 110).

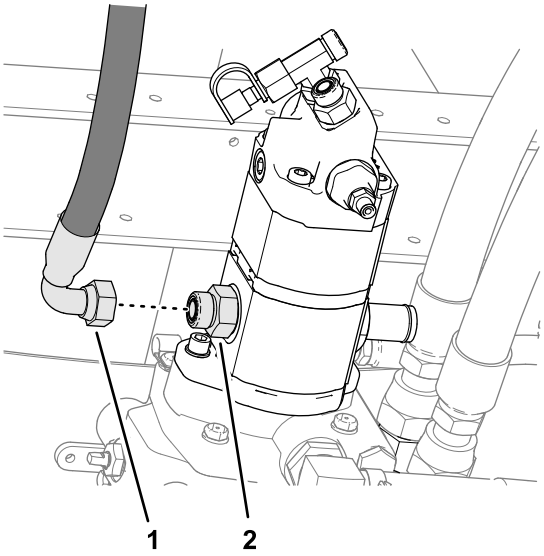

g314172

Figure 110

1. Pressure hose (spray-pump motor)
2. Straight fitting

Assembling the Suction Hose to the Pump

1. Align a drain pan under the suction hose and hydraulic pump (Figure 111).

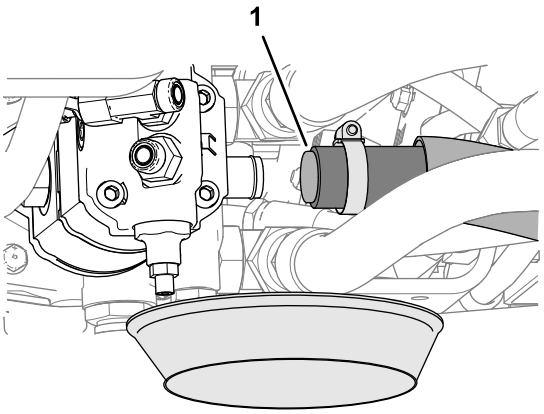

g314196

Figure 111

1. Suction hose

2. Loosen the hose clamp (Figure 112).

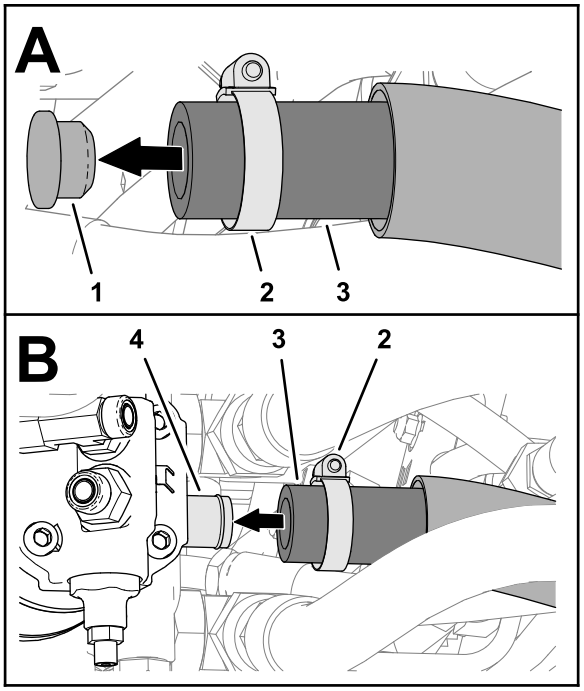

g313948

Figure 112

1. Hose plug
2. Hose clamp
3. Suction hose
4. Barbed fitting (hydraulic pump)

3. Remove the hose plug from the suction hose and assemble the hose onto the barbed fitting of the hydraulic pump (Figure 112).
4. Secure the hose to the fitting with the hose clamp (Figure 112).

19

Installing the Forward Pressure Hose for the Boom-Lift Manifold

Parts needed for this procedure:

1	Forward pressure hose 10 x 660 mm (3/8 x 26 inches)

Procedure

1. Loosely assemble the straight fitting of the forward pressure hose to the bulkhead fitting.

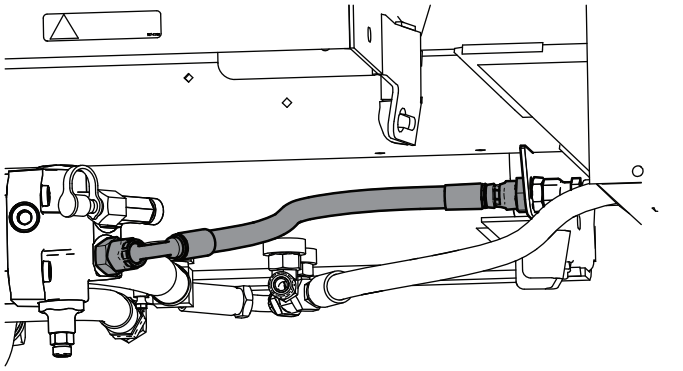

g499478

Figure 113

2. Route the hose to the hydraulic pump .
3. Assemble the 45° fitting of the forward pressure hose to the T-fitting of the hydraulic pump.
4. Tighten the hose fittings.

20

Installing the Hoses

Parts needed for this procedure:

1	Hose 6 x 203 mm (1/4 x 8 inches); -6 (straight) and -6 (45°) fittings
2	O-ring 12.4/1.8 mm (0.489/0.070 inch)
1	Hose 6 x 2819 mm (1/4 x 111 inches); -4 (90°) and -6 (90°) fittings
1	Hose 6 x 673 mm (1/4 x 26-1/2 inches); -4 (straight) and -6 (90°) fittings
1	Hose 6 x 711 mm (1/4 x 28 inches); -4 (straight) and -6 (90°) fittings
1	Hose 10 x 187 mm (3/8 x 7-3/8 inches); -6 (straight) and -8 (90°) fittings
1	Hose 10 x 264 mm (3/8 x 10-3/8 inches); -8 (90°) and -6 (45°) fittings
2	O-ring 9.2/1.8 mm (0.364/0.070 inch)
1	Hose 6 x 1397 mm (1/4 x 55 inches); -6 (straight) and -6 (90°) fittings
1	Hose 6 x 1270 mm (1/4 x 50 inches); -6 (straight) and -6 (90°) fittings
1	Hose 10 x 2921 mm (3/8 x 115 inches); -8 (90°) and -8 (90°) fittings
1	O-ring 7.6/1.8 mm (0.301/0.070 inch)
3	Cable tie

Installing the Steering Valve Hoses

1. Assemble the 45° fitting of the hose 6 x 203 mm (1/4 x 8 inches) onto the port LS2 fitting of the EHI steering valve (Figure 114).

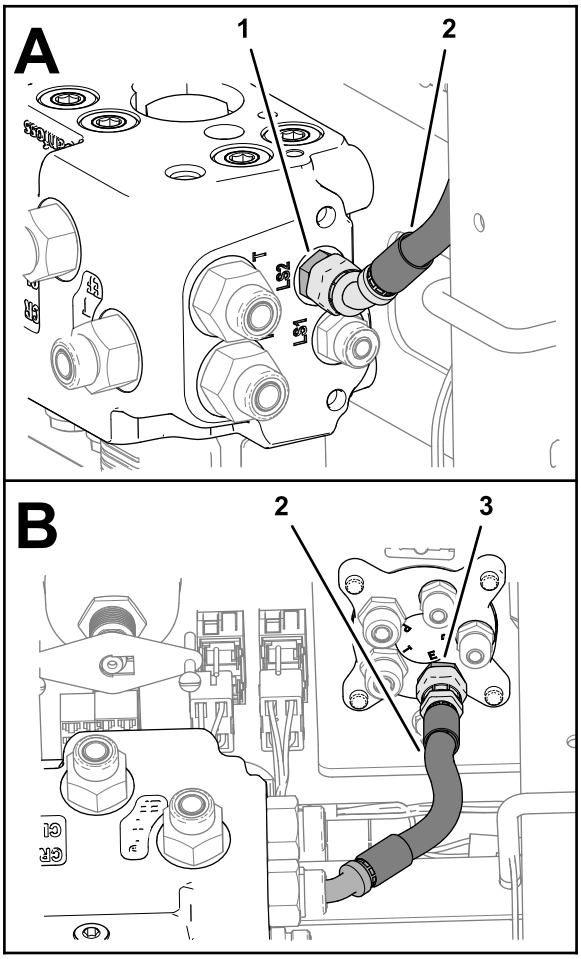

g302041

Figure 114

1. Port LS2 fitting (EHI steering valve)
2. Hose 6 x 203 mm (1/4 x 8 inches)
3. Port E fitting (steering valve)

2. Assemble the straight fitting of the hose 6 x 203 mm (1/4 x 8 inches) onto the port E fitting of the steering valve, and tighten both hose fittings (Figure 114).
3. Route the end of the hydraulic pump hose 6 x 2819 mm (1/4 x 111 inches) with the -4, 90° fitting through the grommet in the floor plate (Figure 115).

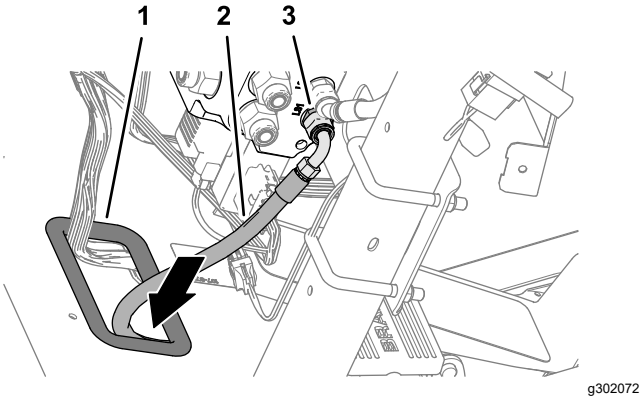

g302072

Figure 115

1. Grommet
2. Hydraulic pump hose 6 x 2819 mm (1/4 x 111 inches)
3. Port LS1 fitting (EHI steering valve)

4. Assemble the -6, 90° fitting of the hose 6 x 2819 mm (1/4 x 111 inches) onto the port the LS1 fitting of the EHI steering valve, and tighten the hose fitting (Figure 115).
5. Assemble the 90° fitting of the hose 6 x 673 mm (1/4 x 26-1/2 inches) into the port R fitting of the EHI steering valve (Figure 116).

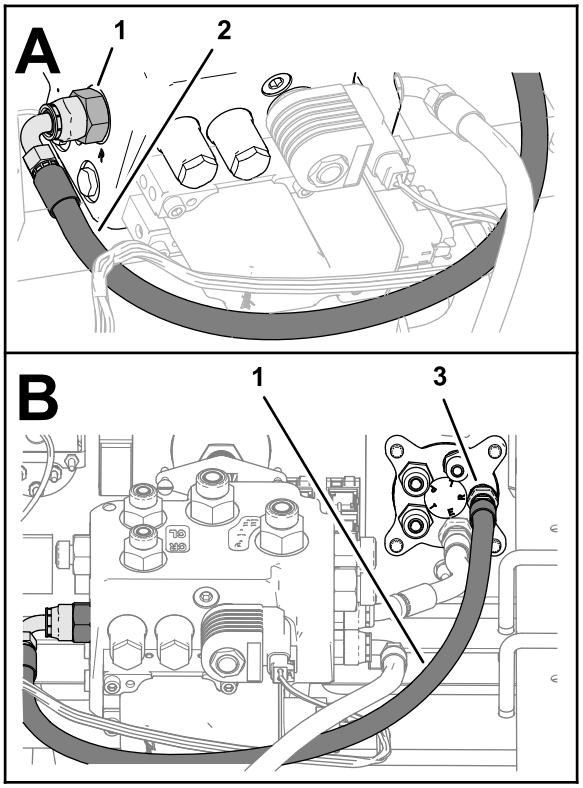

g302130

Figure 116

1. Port R fitting (EHI steering valve)
2. Hose 6 x 673 mm (1/4 x 26-1/2 inches)
3. Port R fitting (steering valve)

6. Assemble the straight fitting of the hose 6 x 673 mm (1/4 x 26-1/2 inches) into the port R fitting of the steering valve, and tighten both hose fittings (Figure 116).
7. Assemble the 90° fitting of the hose 6 x 711 mm (1/4 x 28 inches) onto the port L fitting of the EHI steering valve (Figure 117).

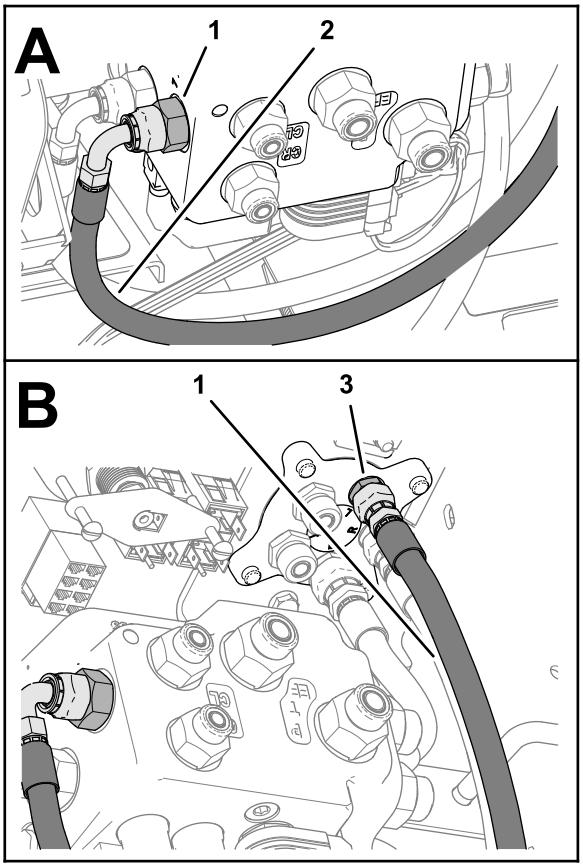

g302131

Figure 117

1. Port L fitting (EHI steering valve)
2. Hose 6 x 711 mm (1/4 x 28 inches)
3. Port L fitting (steering valve)

8. Assemble the straight fitting of the hose 6 x 711 mm (1/4 x 28 inches) onto the port L fitting of the steering valve, and tighten both hose fittings (Figure 117).
9. Assemble the 90° fitting of the hose 10 x 187 mm (3/8 x 7-3/8 inches) onto the port T fitting of the EHI steering valve (Figure 118).

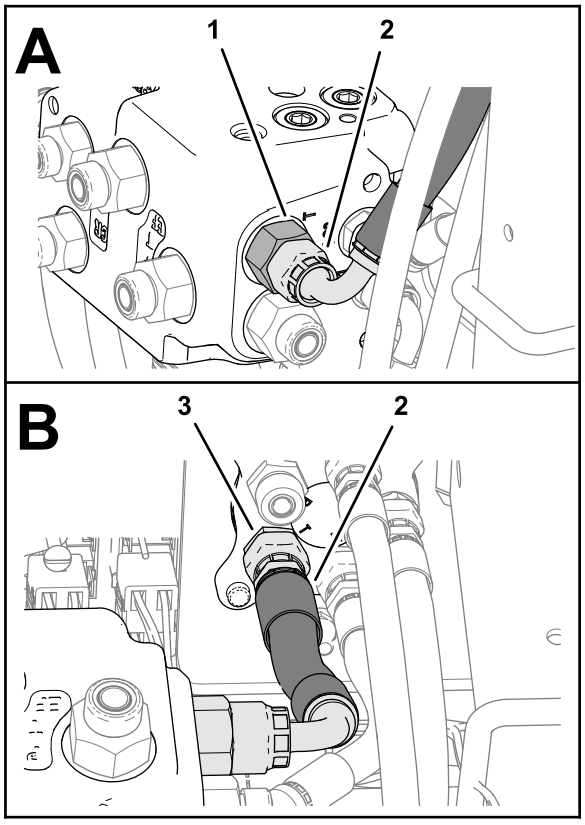

g302044

Figure 118

1. Port T fitting (EHI steering valve)
2. Hose 10 x 187 mm (3/8 x 7-3/8 inches)
3. Port T fitting (steering valve)

10. Assemble the straight fitting of the hose 10 x 187 mm (3/8 x 7-3/8 inches) onto the port T fitting of the steering valve, and tighten both hose fittings (Figure 118).
11. Assemble the 90° fitting of the hose 10 x 264 mm (3/8 x 10-3/8 inches) onto the port P fitting of the EHI steering valve (Figure 119).

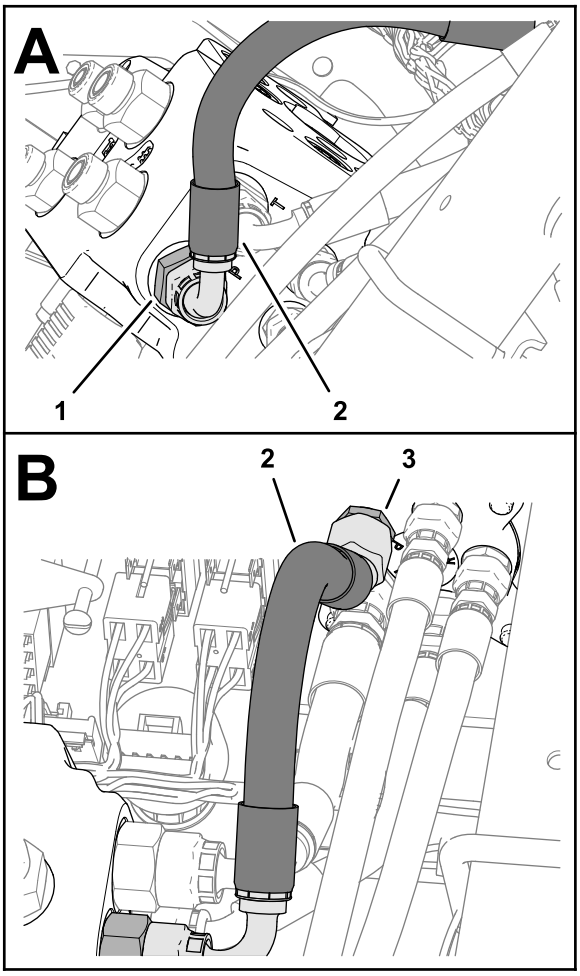

g302042

Figure 119

1. Port P fitting (EHI steering valve)
2. Hose 10 x 264 mm (3/8 x 10-3/8 inches)
3. Port P fitting (steering valve)

12. Assemble the 45° fitting of the hose 10 x 264 mm (3/8 x 10-3/8 inches) onto the port P fitting of the steering valve, and tighten both hose fittings (Figure 119).

Installing the Steering Cylinder Hoses

1. Route the end of the hose 6 x 1397 mm (1/4 x 55 inches) with the straight fitting through the grommet in the floor plate (Figure 120).

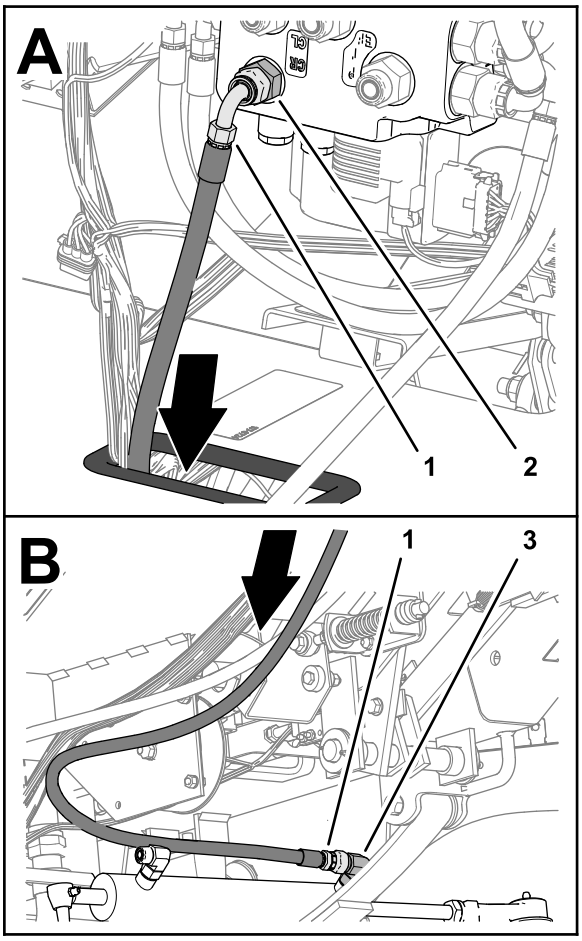

g302038

Figure 120

1. Hose 6 x 1397 mm (1/4 x 55 inches); -6 (straight) and -6 (90°) fittings
2. Port CR fitting (EHI steering valve)
3. 90° fitting (retract port—steering cylinder)

2. Assemble the 90° fitting of the hose 6 x 1397 mm (1/4 x 55 inches) onto the port CR fitting of the EHI steering valve (Figure 120).
3. Remove the 2 O-ring in the face 90° fittings in the extend and retract ports of the steering cylinder (Figure 121).

   Note: Discard the O-ring.

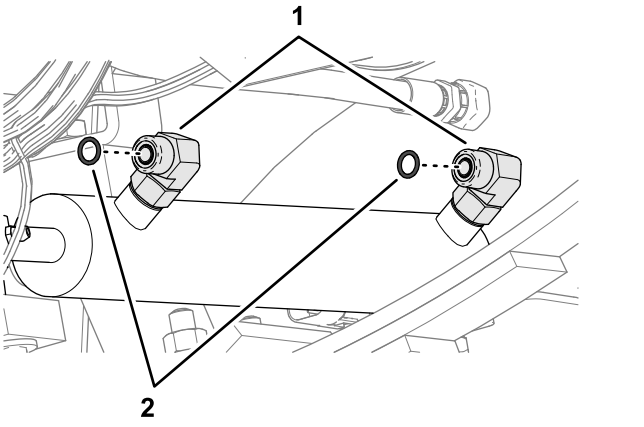

g313835

Figure 121

1. 90° fittings
2. O-rings 9.2/1.8 mm (0.364/0.070 inch)

4. Install a 2 new O-ring 9.2/1.8 mm (0.364/0.070 inch) into the groove of the 90° fittings (Figure 121).
5. Assemble the straight fitting of the hose 6 x 1397 mm (1/4 x 55 inches) onto the 90° fitting in the retract port of the steering cylinder, and tighten both hose fittings (Figure 120).
6. Route the end of the hose 6 x 1270 mm (1/4 x 50 inches) with the straight fitting through the grommet in the floor plate (Figure 122).

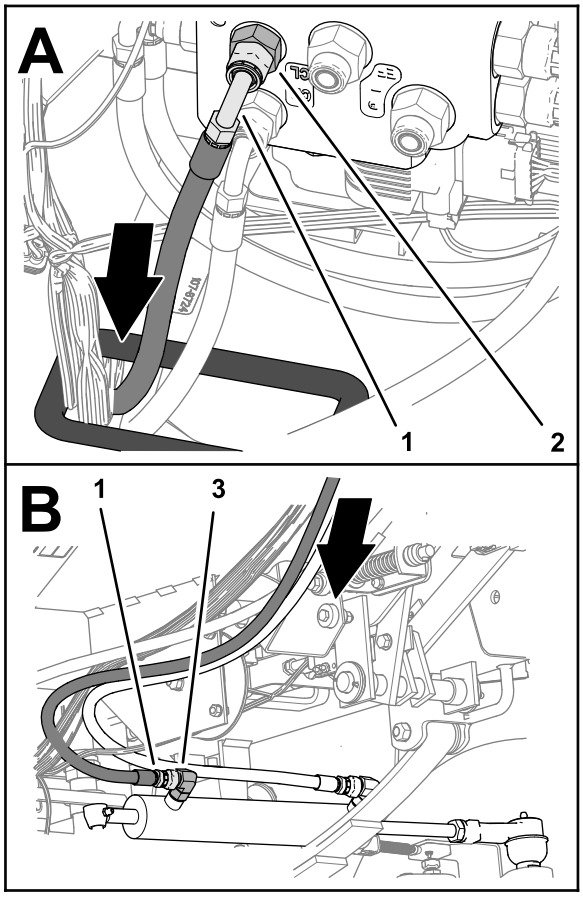

g302037

Figure 122

1. Hose 6 x 1270 mm (1/4 x 50 inches); -6 (straight) and -6 (90°) fittings
2. Port CL fitting (EHI steering valve)
3. 90° fitting (extend port—steering cylinder)

7. Assemble the 90° fitting of the hose 6 x 1270 mm (1/4 x 50 inches) onto the port CL fitting of the EHI steering valve (Figure 122).
8. Assemble the straight fitting of the hose 6 x 1270 mm (1/4 x 50 inches) onto the 90° fitting in the extend port of the steering cylinder, and tighten both hose fittings (Figure 122).

Assembling the Tank-Return Hose and Hydraulic-Pump Hose to the EHI Steering Valve

1. Identify the tank-return hose 10 x 2921 mm (3/8 x 115 inches) with 2 fittings (90°).
2. Route the end of the tank-return hose 10 x 2921 mm (3/8 x 115 inches) through the grommet in the floor plate (Figure 123).

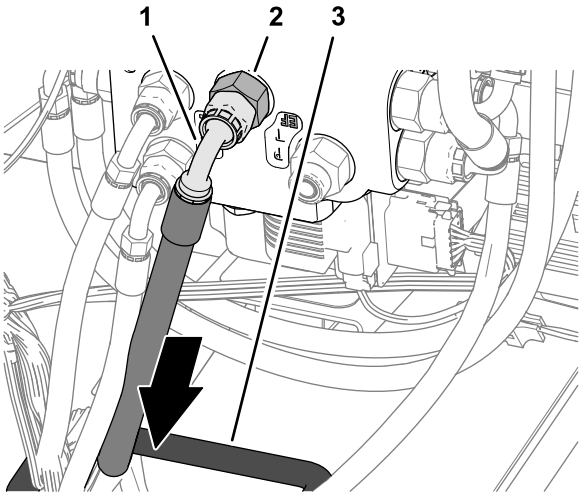

g302098

Figure 123

1. Tank-return hose 10 x 2921 mm (3/8 x 115 inches); -8 (90°) and -8 (90°) fittings
2. Port EF fitting (EHI steering valve)
3. Grommet

3. Assemble the 90° fitting of the tank-return hose 10 x 2921 mm (3/8 x 115 inches) onto the port EF fitting of the EHI steering valve, and tighten the hose fitting (Figure 123).
4. Identify the hydraulic-pump hose 10 x 2921 mm (3/8 x 115 inches) with a 90° fitting and a 45° fitting.
5. Route the end of the hydraulic-pump hose 10 x 2921 mm (3/8 x 115 inches) with the 45° fitting the through the grommet in the floor plate (Figure 124).

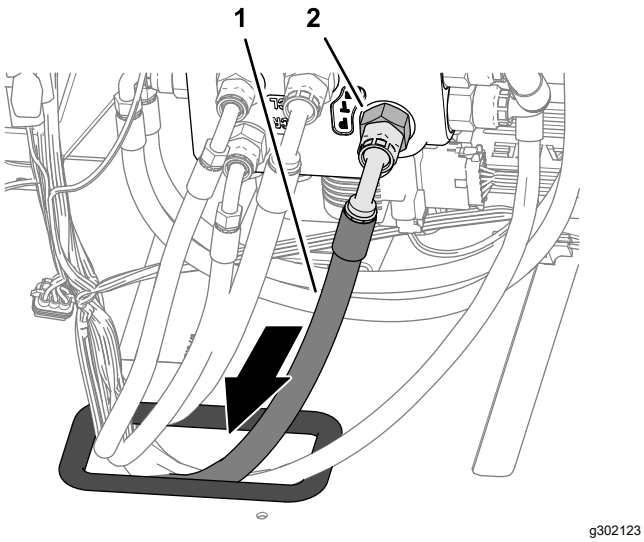

g302123

Figure 124

1. Port PT fitting (EHI steering valve)
2. Hydraulic-pump hose 10 x 2921 mm (3/8 x 115 inches); -8 (90°) and -6 (45°) fittings

6. Assemble the 90° fitting of the hydraulic-pump hose 10 x 2921 mm (3/8 x 115 inches) onto the port PT fitting of the EHI steering valve, and tighten the hose fitting (Figure 124).
7. Route the 2 hydraulic pump hoses and the tank-return hose rearward, along the right frame tube of the machine (Figure 125).

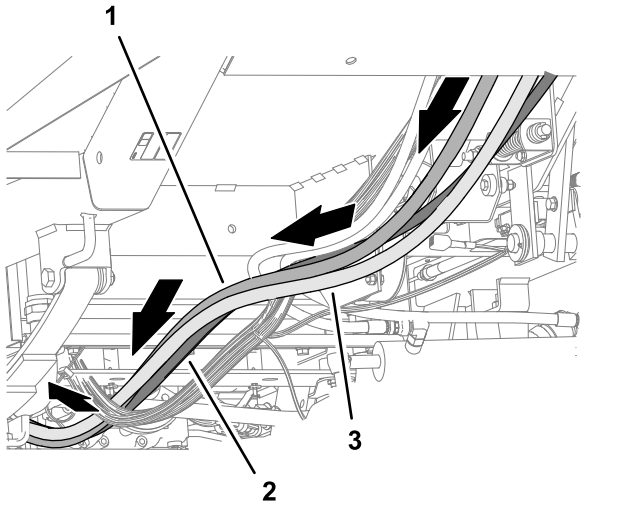

g302154

Figure 125

1. Tank-return hose 10 x 2921 mm (3/8 x 115 inches); -8 (90°) and -8 (90°) fittings
2. Hydraulic-pump hose 10 x 2921 mm (3/8 x 115 inches); -8 (90°) and -6 (45°) fittings
3. Hydraulic-pump hose 6 x 2819 mm (1/4 x 111 inches); -4 (90°) and -6 (90°) fittings

Routing the Hydraulic Pump Hoses

1. Route the hydraulic pump hose 10 x 2921 mm (3/8 x 115 inches—EHI steering valve port PT) with the 45° fitting into the top groove of the tube-clamp half at the upper location (Figure 126).

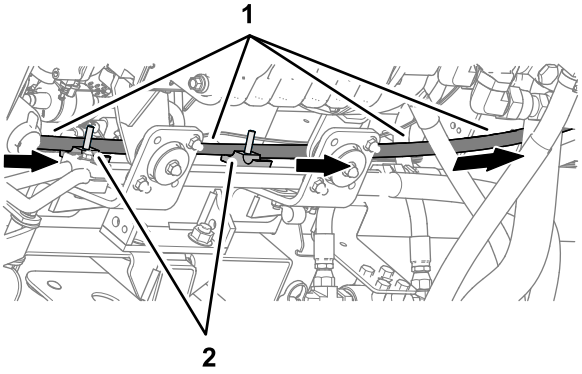

g302043

Figure 126

1. Hydraulic pump hose 10 x 2921 mm (3/8 x 115 inches—EHI steering valve port PT) with the 45° fitting
2. Upper groove—tube-clamp half (upper location)

2. Route the 45° fitting of the hose toward the hydraulic pump.
3. Route the hydraulic pump hose 6 x 2819 mm (1/4 x 111 inches—EHI steering valve port LS1) with the 90° fitting into the bottom groove of the tube-clamp half at the upper location (Figure 127).

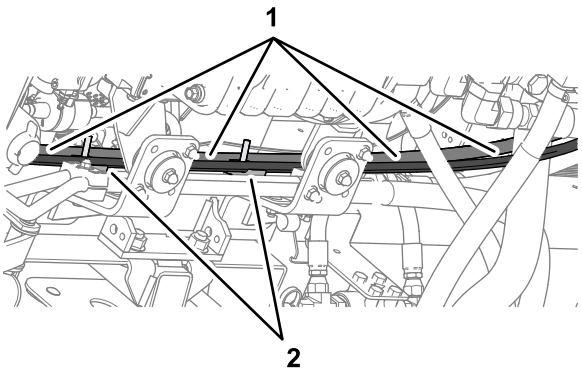

g302040

Figure 127

1. Hose 6 x 2819 mm (1/4 x 111 inches—EHI steering valve port LS1) 90° fitting
2. Lower groove—tube-clamp half (upper location)

4. Route the 90° fitting of the hose toward the hydraulic pump.
5. Assemble the 2 tube-clamp halves onto the capscrews, and secure the tube-clamp halves

and hoses (Figure 128) with 2 flange-head locknuts (5/16 inch).

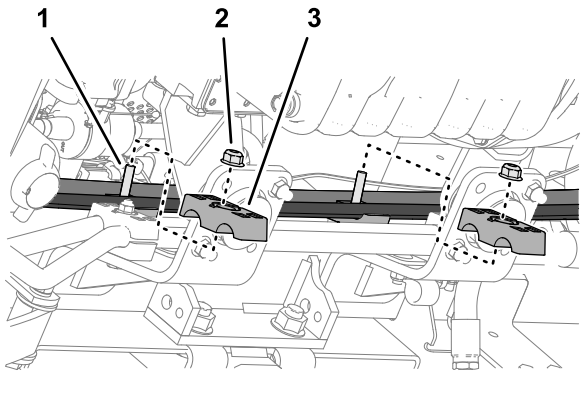

Figure 128

1. Capscrew (5/16 x 2-1/4 inch)
2. Flange-head locknut (5/16 inch)
3. Tube-clamp half

Installing the Hydraulic Tank Return Hose

1. Route the tank-return hose 6 x 2819 mm (1/4 x 111 inches—EHI steering valve port EF) across the top of the right engine mount brackets (Figure 129).

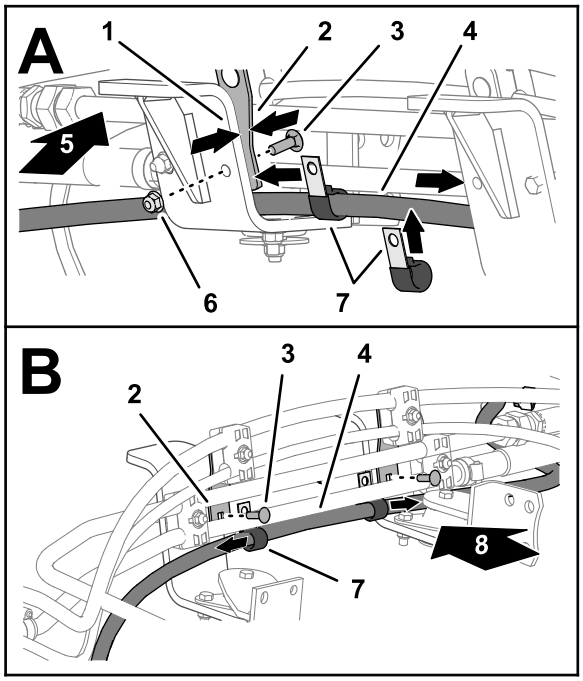

Figure 129

1. Engine mount bracket
2. Tube clamp mount plate
3. Carriage bolt (5/16 x 1 inch)
4. Tank-return hose 6 x 2819 mm (1/4 x 111 inches—EHI steering valve port EF)
5. Left side of the machine
6. Flange locknut (5/16 inch)
7. P-clamp
8. Right side of the machine

2. Assemble the 2 P-clamps onto the hose as shown in Figure 129.
3. Align the 2 P-clamps between the tube clamp mount plates and the engine mount brackets (Figure 129).
4. Secure the clamp mount plates and P-clamps to the engine mount brackets (Figure 129 and Figure 130) with the 2 carriage bolt (5/16 x 1 inch) and 2 flange locknut (5/16 inch).

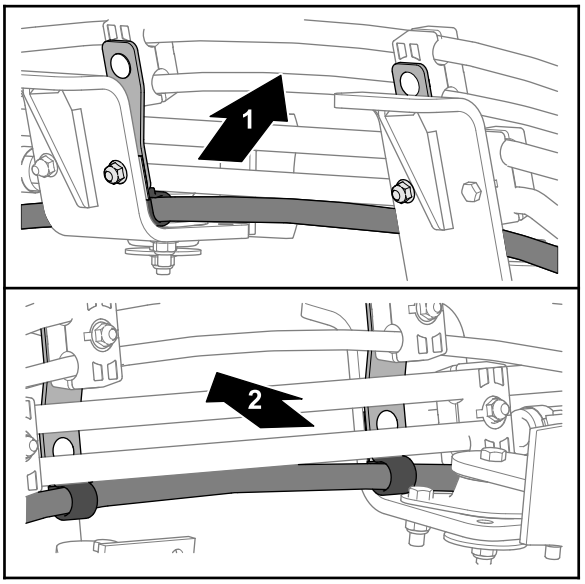

g302153

Figure 130

1. Left side of the machine
2. Right side of the machine

5. Remove the O-ring in the face of the T-fitting of the hydraulic tank (Figure 131).

   Note: Discard the O-ring.

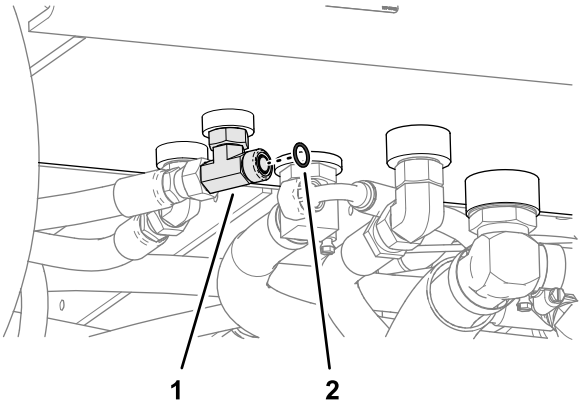

g313837

Figure 131

1. T-fitting (hydraulic tank return)
2. O-ring 12.4/1.8 mm (0.489 /0.070 inch)

6. Install a new O-ring 12.4/1.8 mm (0.489/0.070 inch) into the groove of the T-fitting (Figure 131).
7. Assemble the 90° fitting of the tank-return hose 6 x 2819 mm (1/4 x 111 inches) onto the T-fitting, and tighten the hose fitting (Figure 132).

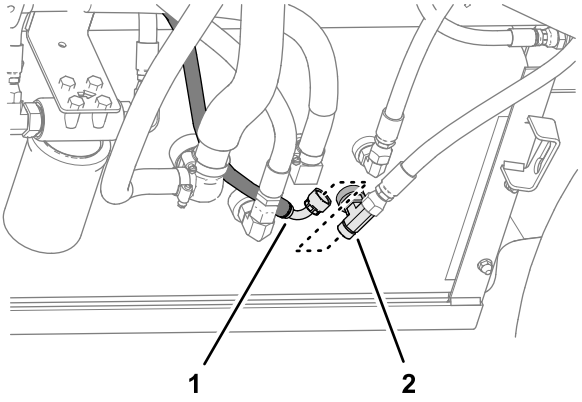

g302101

Figure 132

1. Hose 10 x 2921 mm (3/8 x 115 inches)
2. T-fitting (hydraulic tank)

Installing the Hydraulic Pump Hoses

1. Remove the O-ring in the face of the T-fitting at the end the hydraulic pump (Figure 133).

   Note: Discard the O-ring.

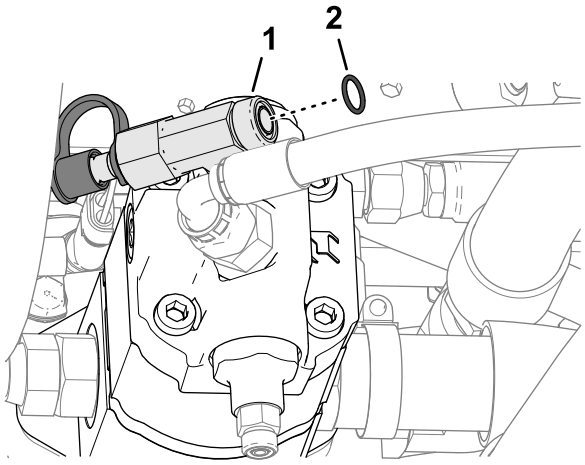

g337828

Figure 133

1. T-fitting
2. O-ring 12.4/1.8 mm (0.489/0.070 inch)

2. Install a new O-ring 12.4/1.8 mm (0.489/0.070 inch) into the groove of the T-fitting (Figure 133).
3. Assemble the 45° fitting of the hose 10 x 2921 mm (3/8 x 115 inches) onto the T-fitting, and tighten the hose fitting (Figure 134).

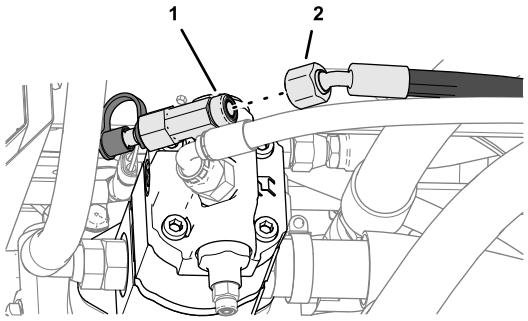

g337827

Figure 134

1. Hose 10 x 2921 mm (3/8 x 115 inches—45° fitting)
2. T-fitting—hydraulic pump

4. Remove the O-ring in the face of the straight fitting at the end of the hydraulic pump (Figure 135).

   Note: Discard the O-ring.

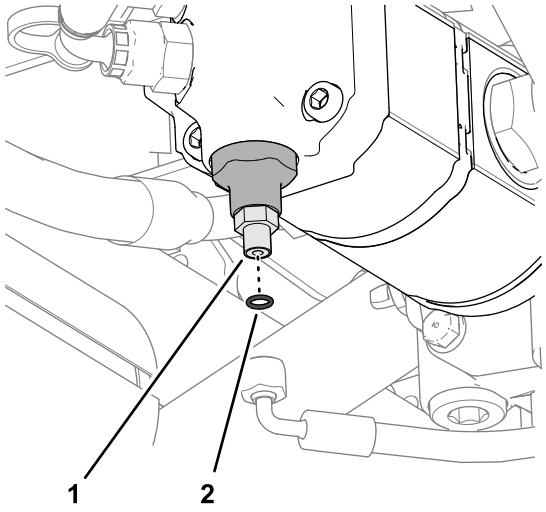

g313834

Figure 135

1. Straight fitting
2. O-ring 7.6/1.8 mm (0.301/0.070 inch)

5. Install a new O-ring 7.6/1.8 mm (0.301/0.070 inch) into the groove of the straight fitting (Figure 135).
6. Assemble the 90° fitting of the hose 6 x 2819 mm (1/4 x 111 inches) onto the straight fitting, and tighten the hose fitting (Figure 136).

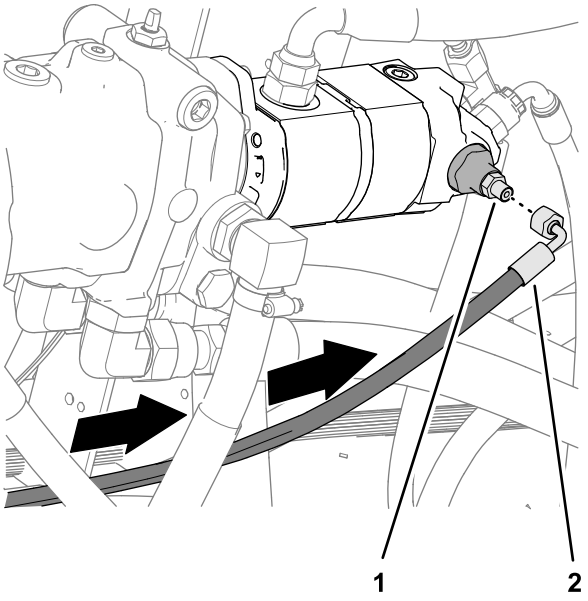

g314161

Figure 136

1. Straight fitting (1/4 x 1/4 inch)—hydraulic pump
2. Hose 6 x 2819 mm (1/4 x 111 inches—90° fitting)

Installing the Lower Hose Cover

1. Under the floor plate, secure the hoses and wire harnesses to the clutch and clutch plate as shown in Figure 137 with the support clamp, capscrew (1/4 x 7/8 inch), nut (1/4 inch), lock washer (1/4 inch), and washer (3/8 x 7/8 inch) that you removed in Removing the Hose Support Clamps (page 24).

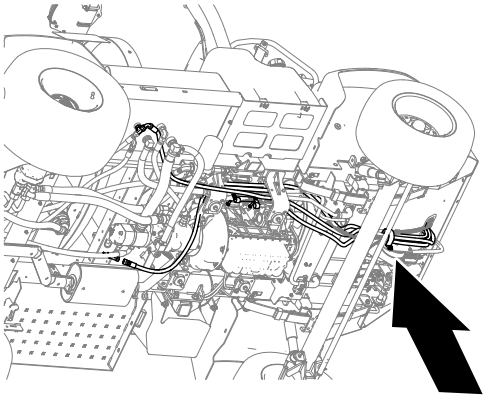

g300044

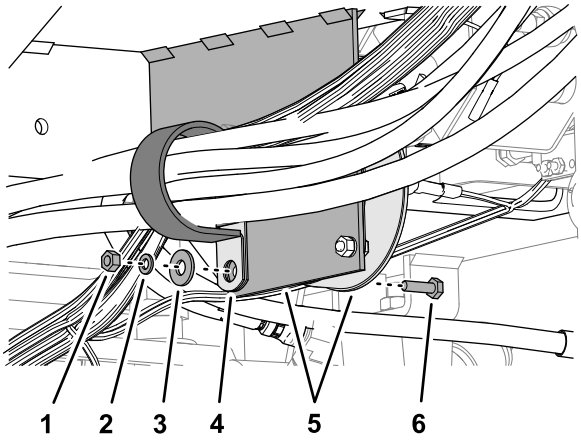

g313648

Figure 137

1. Nut (1/4 inch)
2. Lock washer (1/4 inch)
3. Washer (3/8 x 7/8 inch)
4. Support clamp
5. Clutch and clutch plate
6. Capscrew (1/4 x 7/8 inch)

2. Assemble the lower hose cover over the steering hoses (Figure 138).

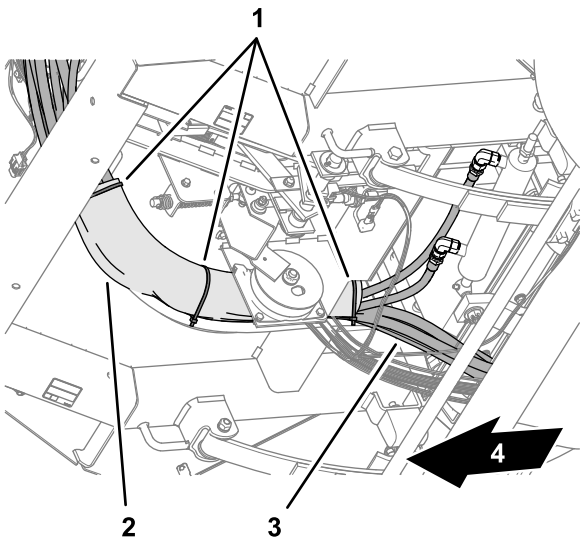

g299125

Figure 138

1. Cable ties
2. Lower hose cover
3. Steering hose
4. Front of the machine

3. Secure the cover to the hoses with 3 cable ties (Figure 138).

21

Installing the Negative Battery Cable

No Parts Required

Procedure

1. Install the negative-battery cable onto the battery terminal (Figure 139).

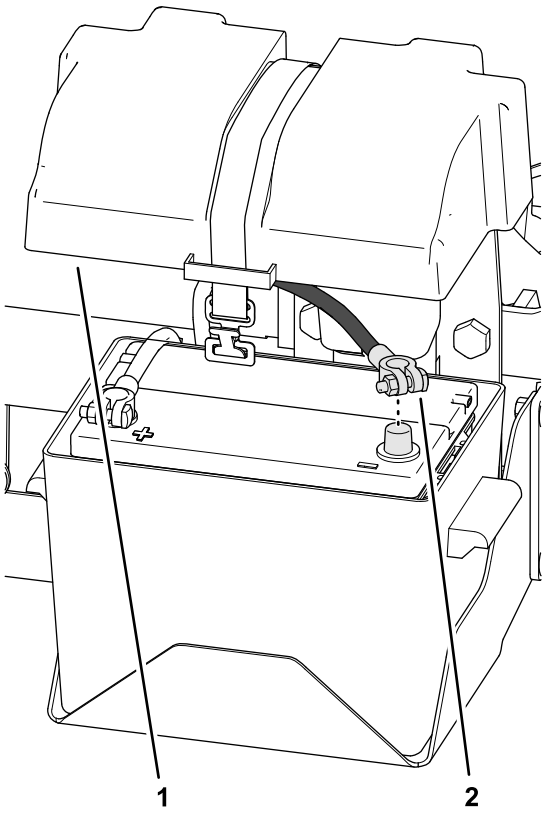

g292314

Figure 139

1. Cover
2. Negative battery cable

2. Assemble the cover onto the battery box, and secure the cover with the strap (Figure 139).

22

Purging Air from the Hydraulic System

No Parts Required

Procedure

1. Start the engine.
2. Fully turn the steering wheel left and right until the wheel turns smoothly.
3. Shut off the engine and remove the key.

23

Checking for Hydraulic Leaks

No Parts Required

Procedure

1. Check the hoses and fittings at the EHI steering valve and the steering valve for hydraulic leaks.

   Important: **Fix all leaks before installing the hood.**
2. Check the hoses and fittings at the hydraulic tank and hydraulic pump for leaks.

   Important: **Fix all leaks.**

24

Installing the Hood

Parts needed for this procedure:

6	Push-in fasteners

Procedure

1. Align the holes in the hood with the holes in the chassis of the machine (Figure 140).

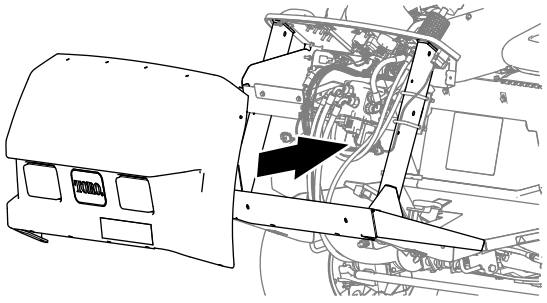

g298935

Figure 140

2. Assemble the hood to the dash support with 2 push-in fasteners (Figure 141).

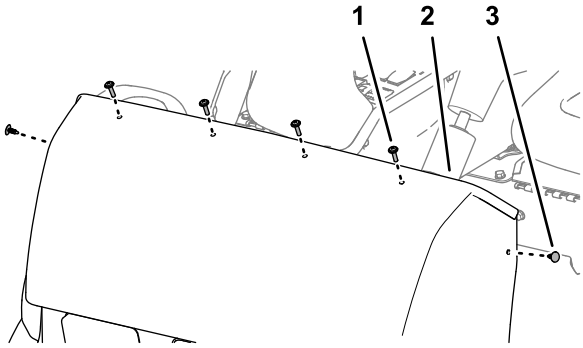

g298940

Figure 141

1. Phillips pan-head screw (1/4 x 1 inch)
2. Hood
3. Push-in fastener

3. Secure the hood to the dash support (Figure 141) with 4 Phillips pan-head screws (1/4 x 1 inch).
4. Assemble the bottom flange of the hood to the machine with 4 push-in fasteners (Figure 142).

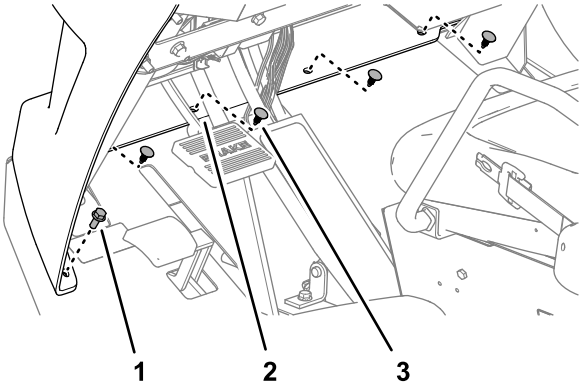

g298937

Figure 142

1. Flange-head bolt (5/16 x 3/4 inch)
2. Flange (hood)
3. Push-in fastener

5. Secure the flange to the machine (Figure 142) with 2 flange-head bolts (5/16 x 3/4 inch).

6. Assemble the headlight connector of the machine wire harness to the connector of the headlight bulb (Figure 143).

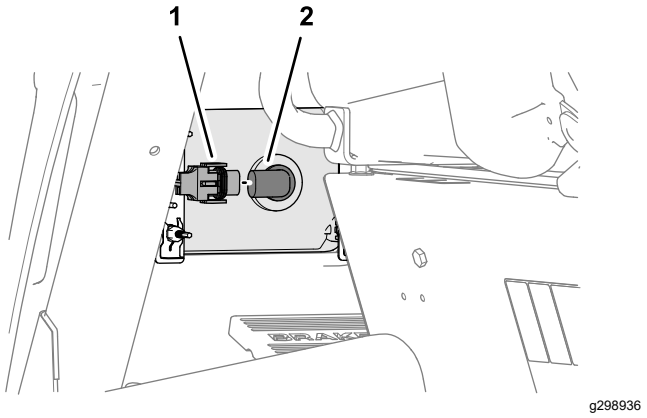

Figure 143

1. Connector (machine harness—headlight)
2. Connector (bulb)

7. Repeat step 6 at the other headlight.

25

Installing the Heat Shield and Undercarriage Shroud

2015 and Later Machines

No Parts Required

Procedure

If removed, installed the heat shield and undercarriage shroud to the bottom of the machine; refer to the *Operator's Manual* for your machine.

26

Checking the Hydraulic Fluid Level

No Parts Required

Procedure

Check the hydraulic fluid level. If the fluid level is low, add fluid to the hydraulic tank; refer to the *Operator's Manual* for the hydraulic fluid specification and checking procedure.

27

Verifying the Software Version

GeoLink Control Console

No Parts Required

Procedure

1. Turn the ignition key to the RUN(gasoline) or PREHEAT/RUN (diesel) position.
2. Press the ABOUT (Toro) icon at the upper left corner of the control console (Figure 144).

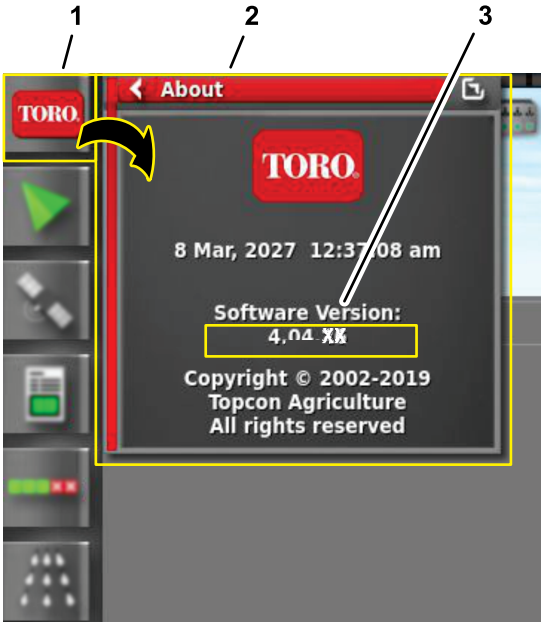

Figure 144

1. ABOUT (Toro) icon
2. ABOUT fly-out-window
3. Software version number (version 4.04 or higher)

3. When the software version is correct, the About dialog box displays software version 4.04 or higher.

   Note: If the software versions differ, contact the Toro technical assistance center.

28

Verifying the Minimum Hardware Requirements

Laptop Computer

No Parts Required

Procedure

Ensure that your laptop computer that meets the hardware, operating system, and application requirements before installing the Danfoss PLUS+1® Service Tool; refer to the tables that follow.

Hardware

Component	Minimum Capacity
CPU*	1.5 GHz, 32–bit, 1 core, 2008 or later
Memory	1 GB
Unused Hard Drive Space	Greater than 1 GB
Minimum Display Resolution	1024 x 768
USB Port	Version 2.0 or higher

* The CPU must be intended for laptop use. Processors intended for netbooks, tablets, or similar devices are not recommended.

Operating System

Software	Version
Operating System Version	Microsoft Windows 7—32 bit
OS Components	MSXML 4.0, Service Pack 2 (Microsoft XML Core Services)
User Account Rights	Local administrator access

Applications

Software	Notes
Email Client/Reader	For license registration.
PDF Reader	Any recent standards compliant reader.
Web Browser	Any recent standards compliant web browser (for HTML based F1 Help).

29

Downloading the Software

No Parts Required

Downloading and Extracting the Software Files

1. Go to Gateway

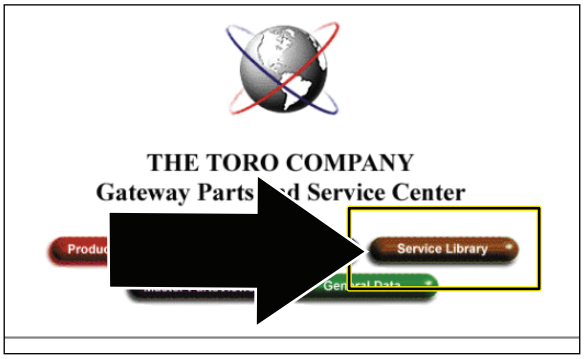

g483680

Figure 145

2. Click on Service

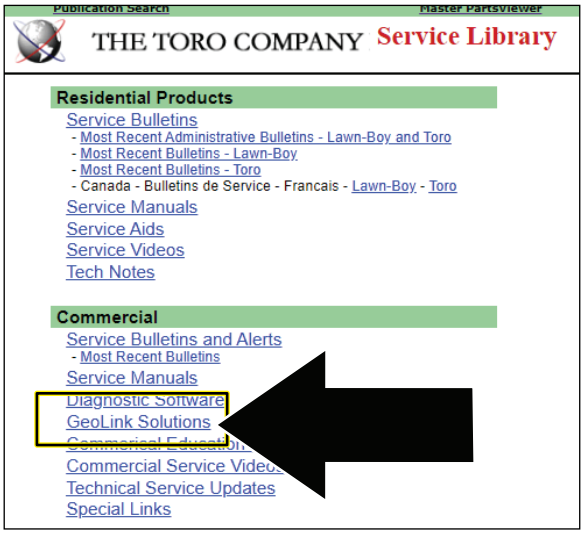

g483681

Figure 146

3.

Note: The file saves to the Downloads directory of your laptop computer.

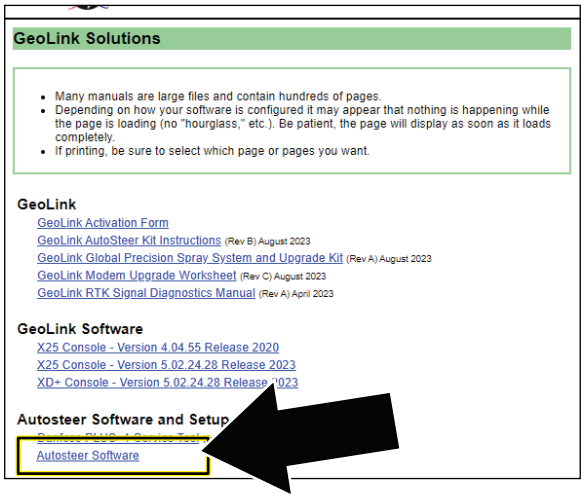

g483682

Figure 147

4.

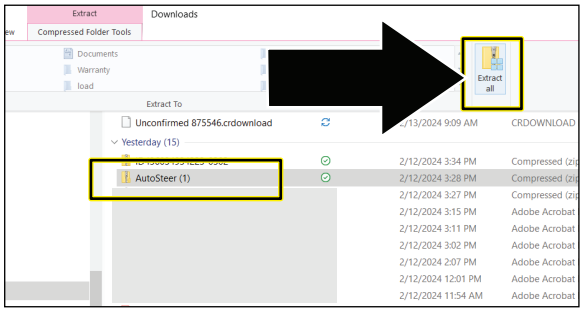

g483683

Figure 148

5. In the Extract Compressed dialog box, ensure that the SHOW EXTRACTED FILES WHEN COMPLETE check box is selected, and click the EXTRACT button .

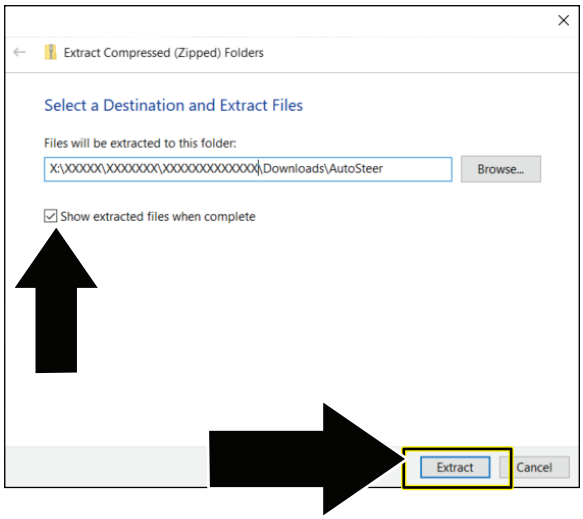

g483684

Figure 149

30

Installing the Software and Driver Files

Laptop Computer

No Parts Required

Installing the Software

Important: **The person installing the PLUS+1 Service tool must have administrative privileges on the laptop computer.**

1. Double click the PLUS+1 ServiceTool 12.0.7 setup.exe file.

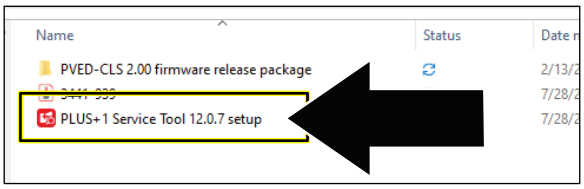

g483725

Figure 150

2. If the User Account Control dialog box displays, click the YES button (Figure 151).

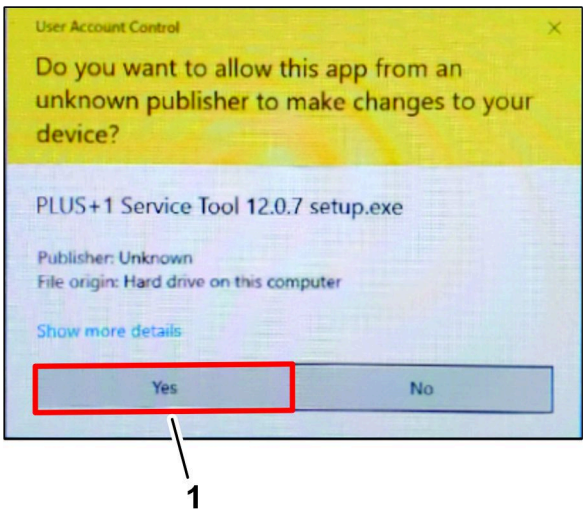

g333504

Figure 151

1. YES button

3. In the Select Destination Location dialog box, click the NEXT button.

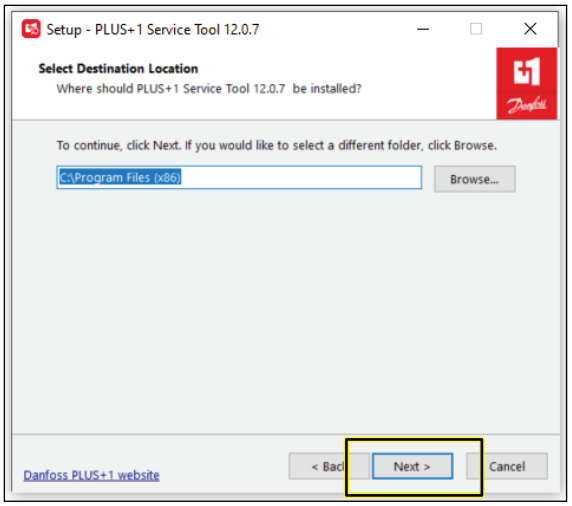

g483727

Figure 152

4. In the Plus+1 Online dialog box, click the NEXT button.

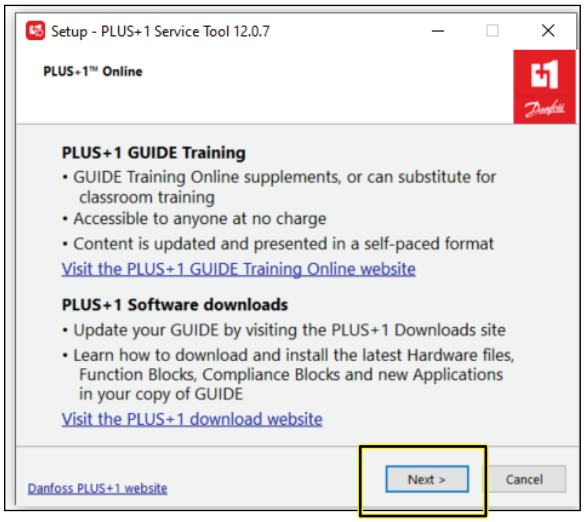

g483726

Figure 153

5. In the Select Additional Tasks dialog box, click the NEXT button.

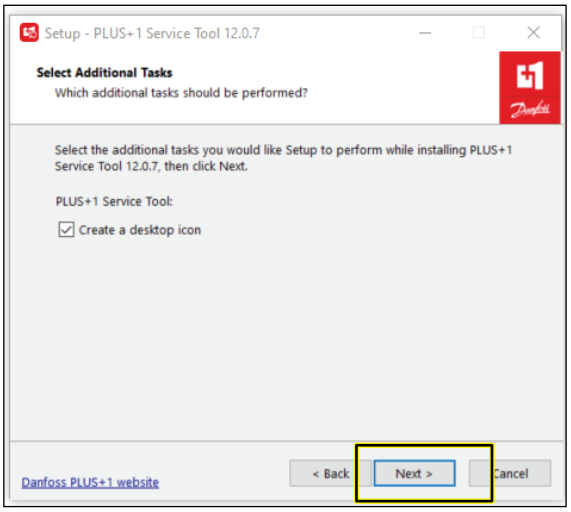

g483728

Figure 154

6. In the Ready to Install dialog box, click the INSTALL button.

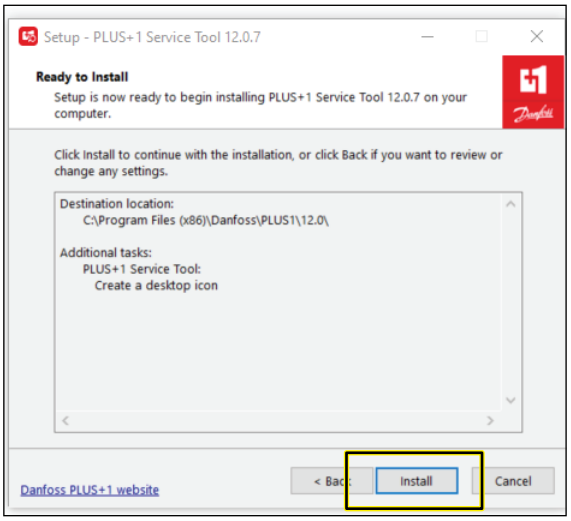

g483729

Figure 155

Note: The progress dialog box displays.

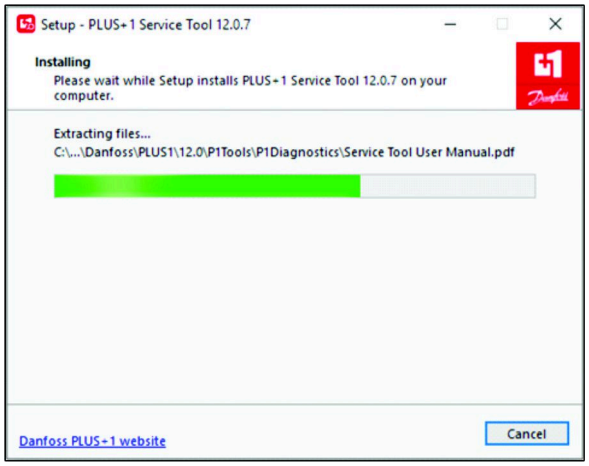

g333498

Figure 156

7. In the Completing Service Tool Setup Wizard dialog box, click the FINISHED button.

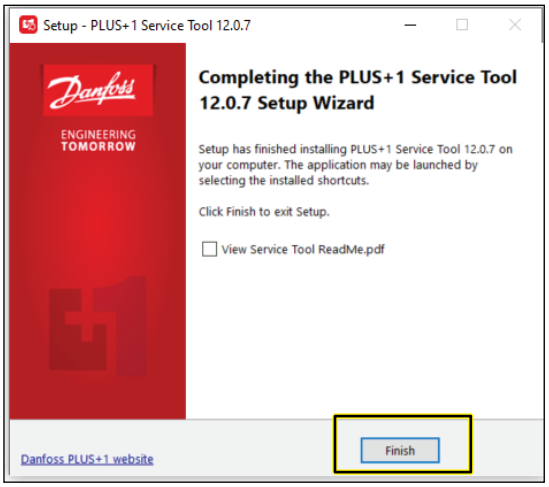

g483730

Figure 157

Installing the Drivers

1. In the Select Destination Location dialog box, click the NEXT button.

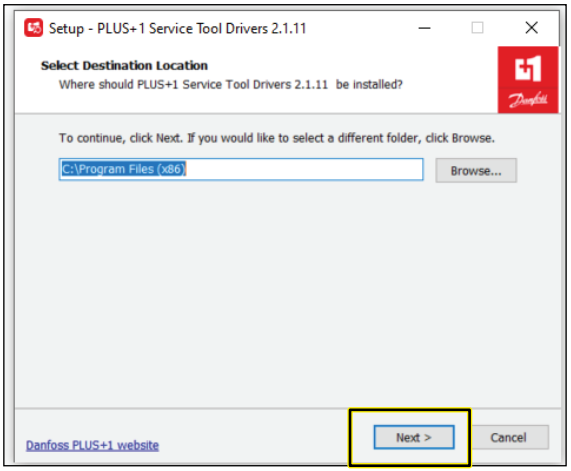

g483719

Figure 158

2. In the Ready to Install dialog box, click the INSTALL button.

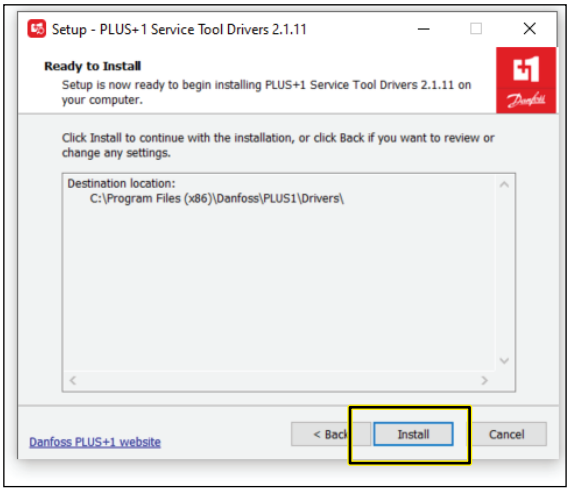

g483720

Figure 159

Note: The progress dialog box displays.

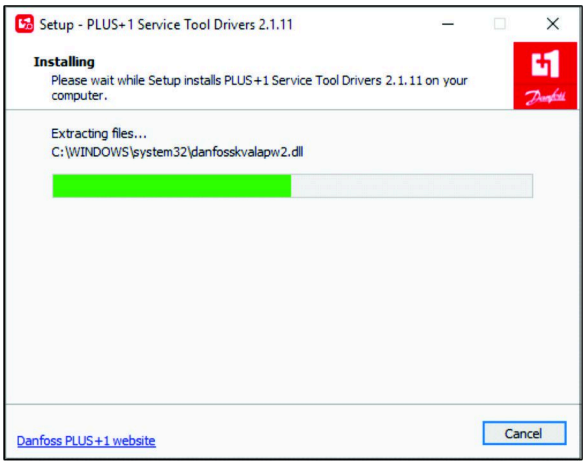

g333496

Figure 160

3. In the Would you like to install this device software dialog box, click the INSTALL button.

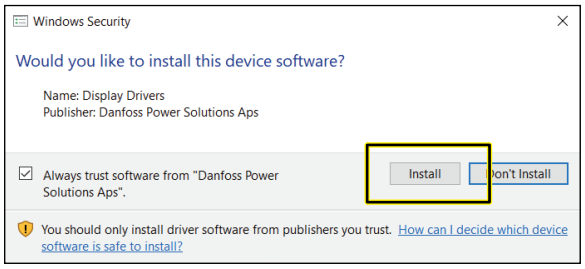

g483722

Figure 161

4. In the Would you like to install this device software dialog box, click the INSTALL button.

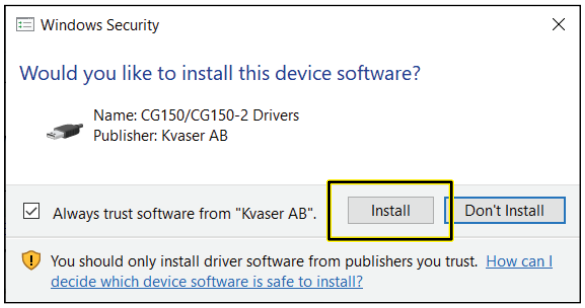

g483723

Figure 162

5. In the Completing Service Tool Drivers Setup Wizard dialog box, click the FINISHED button.

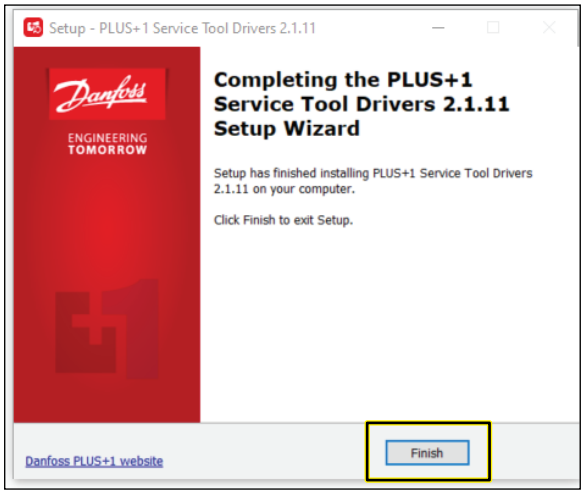

g483724

Figure 163

31

Installing the Service and Data Files

Laptop Computer

No Parts Required

Opening the Program and Installing the Application

1. Double click on the Plus+1 Service Tool icon.

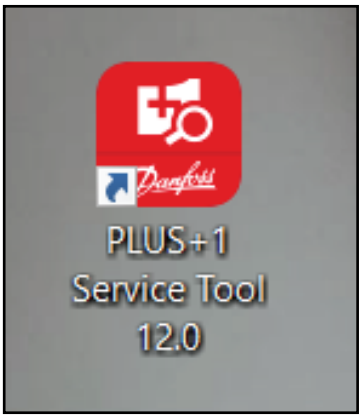

g483731

Figure 164

2. Read the license information, check the boxes noting you have read and agree to the agreement, and click OK.

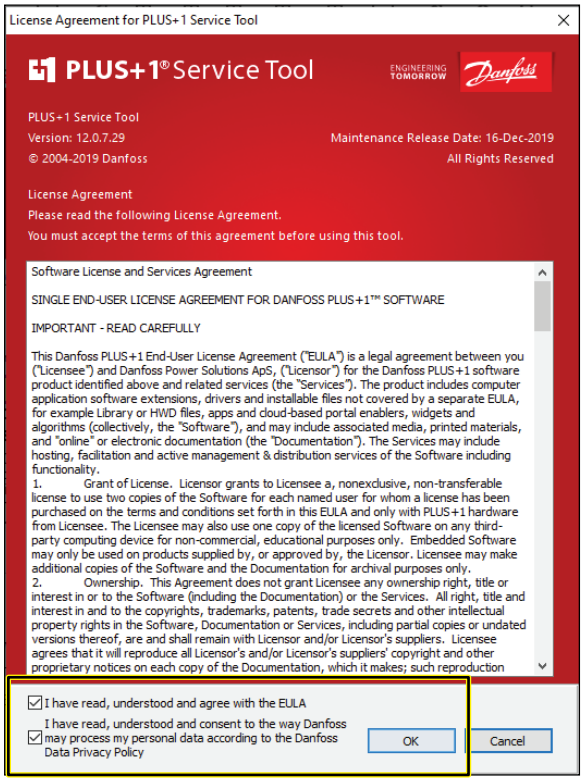

g483732

Figure 165

3. Click OK on the confirmation screen.

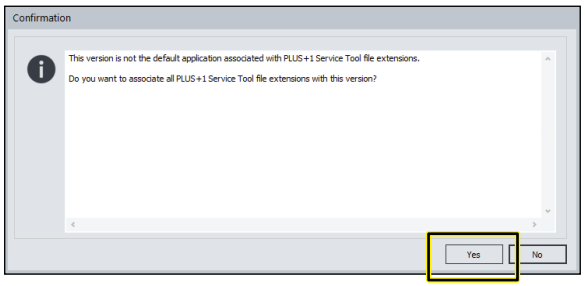

g483733

Figure 166

4. Click on the folder with magnifying glass icon to Scan for Service Application File.

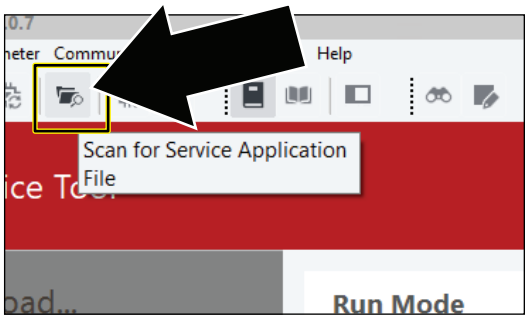

g483734

Figure 167

5. Navigate to the Service tool folder in the PVED-CLS 2.00 firmware release package folder.
6. Click on PVED-CLS_2.00_rev_D and click OPEN.

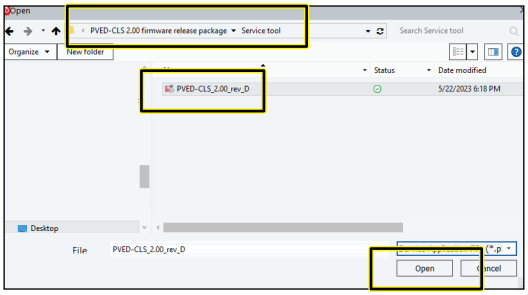

g483735

Figure 168

7. Click CLOSE if you receive this error. This is a passive error and will not effect the installation or use of this tool.

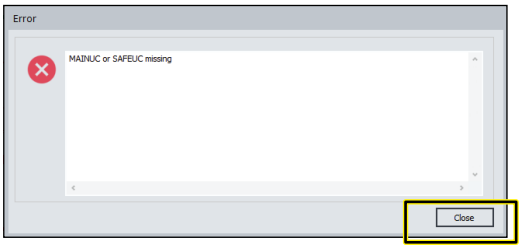

g483736

Figure 169

Installing the Diagnostic Data

1. Click the FILE icon, and in the drop-down list, click the INSTALL DIAGNOSTIC DATA . . . icon.

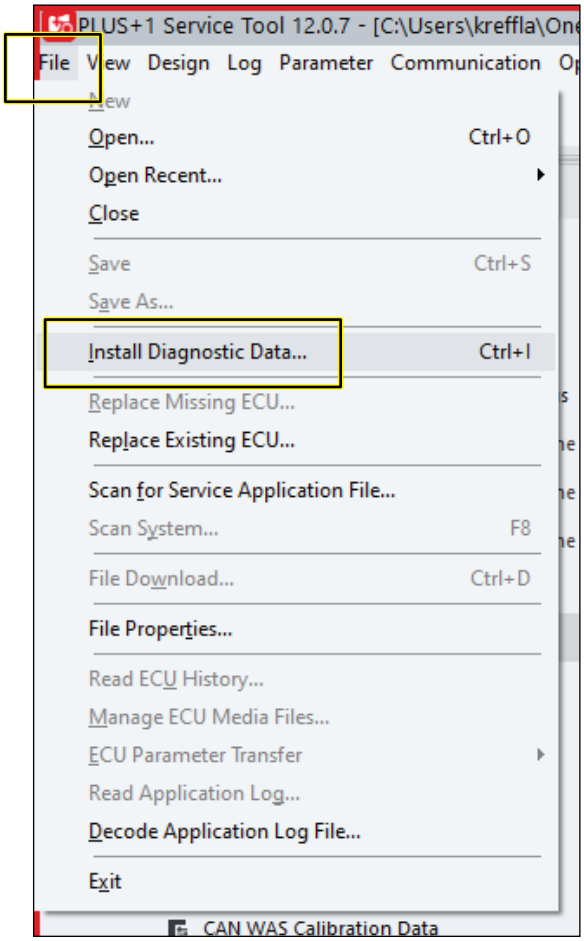

g483704

Figure 170

2. In the Install Diagnostic Data dialog box, click the PLUS+1 protocol icon, and press the INSTALL icon.

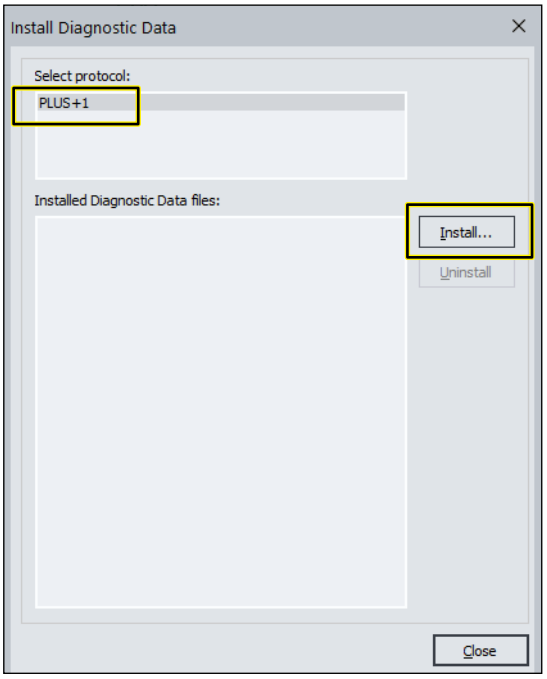

g483705

Figure 171

3. Navigate to the Diagnostic data files folder in the PVED-CLS 2.00 firmware release package folder.
4. Select all the files in this folder and click OK.

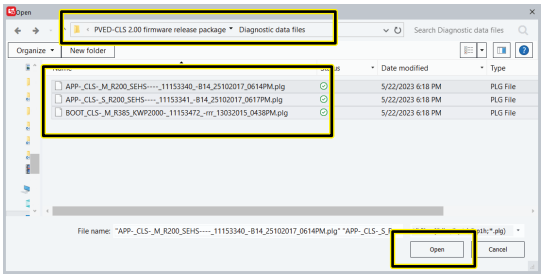

g483706

Figure 172

5. In the INSTALL DIAGNOSTIC DATA dialog box, click the CLOSE icon.

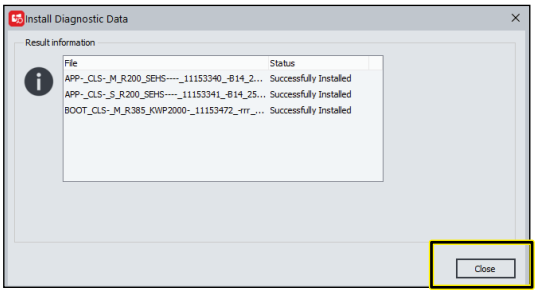

g483707

Figure 173

6. In the INSTALL DIAGNOSTIC DATA dialog box, click the CLOSE icon.

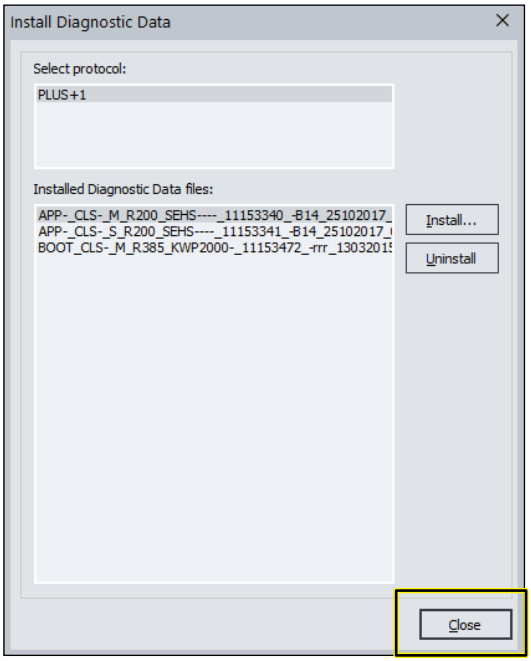

g483708

Figure 174

32

Selecting the Gateway Channel

Laptop Computer

No Parts Required

Procedure

1. Plug a Toro Diag cable into the USB port of the laptop computer and open the Plus+1 software program.
2. On the ribbon bar, click the Communication button.

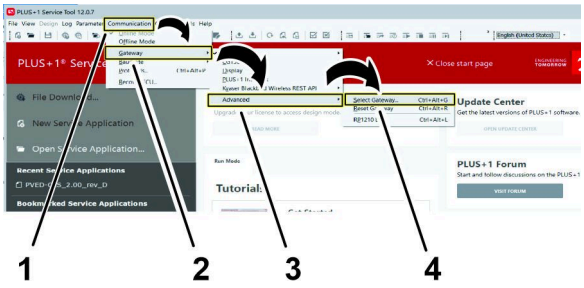

g332822

Figure 175

1. Communication button
2. Gateway button
3. Advanced button
4. Select Gateway... button

3. In the Communication drop-down menu, click the Gateway button.
4. In the Gateway drop-down menu, click the Advanced button.
5. In the Advanced drop-down menu, click the Select Gateway... button.
6. On the Select Gateway Channel screen, click the Kvaser option in the Gateways list.

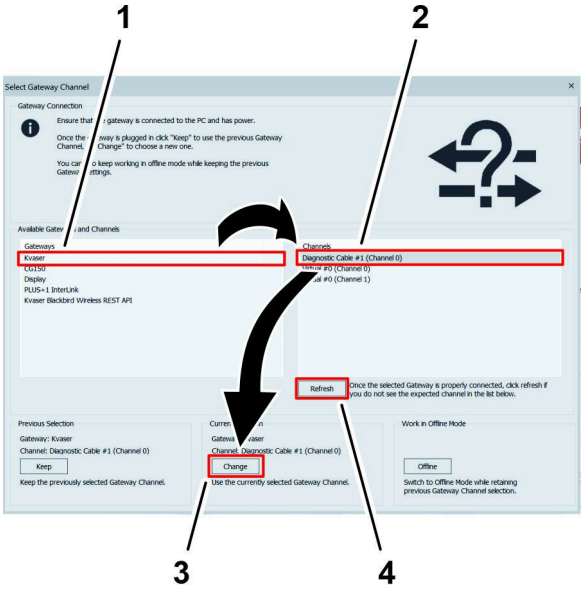

g332837

Figure 176

1. Kvaser option (Gateways list)
2. Diagnostic Cable option (Channels menu)
3. CHANGE button (Current Selection heading)
4. Refresh button

7. In the Channels menu, click the Diagnostic Cable option.

   Note: If a diagnostic cable option does not display in the Channels menu, verify that the Toro Diag cable is plugged into the USB port of the laptop computer, click the Refresh button on the Select Gateway Channel screen, and click the Diagnostic Cable option.

8. Click the CHANGE button under the Current Selection heading.

33

Setting Up and Calibrating the Software

No Parts Required

Calibrating the Compass

Ensure that the GeoLink compass is calibrated, refer to the GeoLink *Software Guide* for your machine.

Preparing to Calibrate the Machine

Installer provided equipment: a USB/CAN interface cable (Toro DIAG cable) Part No. 115-1944

1. Park the machine on the grass at a level location.
2. Shut off the engine and engage the parking brake.

Connecting the Laptop Computer to the Machine

1. If the Toro Diag application is running on the laptop computer, close the Toro Diag application.

   Important: **Do not begin the calibration process if the Toro Diag application is running on the laptop computer.**

2. Plug the USB/CAN interface cable into a USB port of the laptop computer.
3. At the machine, rotate the key to the ON position.
4. Open the Plus+1 program.
5. Remove the cap from the 3-socket connector of the kit wire harness CAN port labeled DUPLICATE DIAG CONNECTOR, and plug the 3-pin connector USB/CAN interface cable into the 3-socket connector.

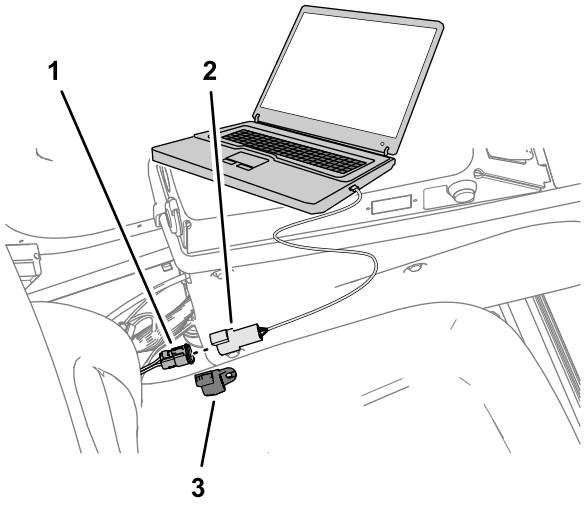

g302258

Figure 177

1. 3-socket connector (labeled DUPLICATE DIAG CONNECTOR—kit wire harness)
2. 3-pin connector (USB/CAN interface cable)
3. Cap

6. On the dash panel of the machine, press enable/transport switch to the ENABLE MODE position.
7. In the System Navigator tab, navigate to the AUTO CALIBRATION directory, expand the directory, and click on WAS Calibration.

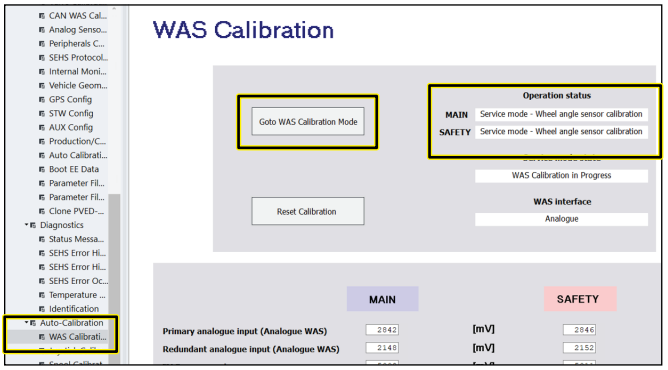

g489523

Figure 178

8. Click GOTO WAS CALIBRATION MODE button.

Capturing Steering Values

1. Start the engine of the machine.
2. Fully turn the steering wheel to the left and stop.
3. Click the CAPTURE L button.

   Note: The sensor value changes as you turn the steering wheel.

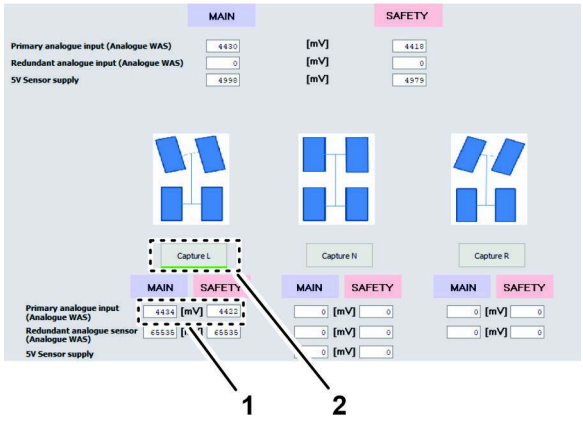

g302220

Figure 179

1. Sensor value
2. CAPTURE L button

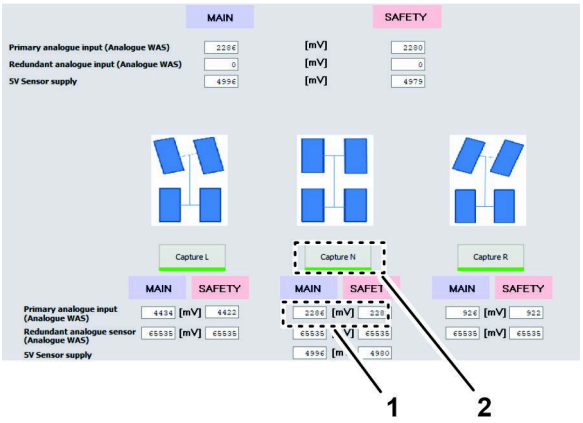

g302221

Figure 181

1. Sensor value
2. CAPTURE N button

4. Fully turn the steering wheel to the right and stop.
5. Click the CAPTURE R button.

   Note: The sensor value changes as you turn the steering wheel.

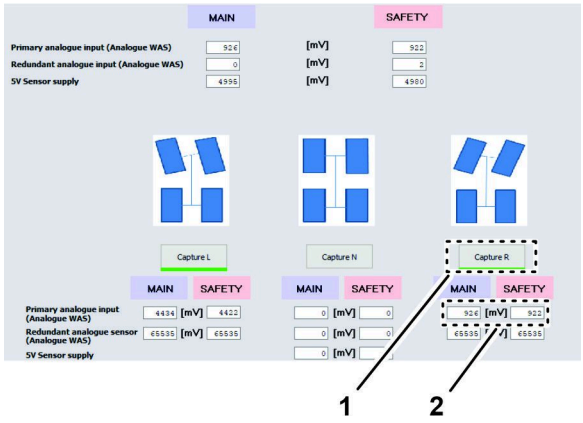

g302222

Figure 180

1. Sensor value
2. CAPTURE R button

6. Turn the steering wheel until the tires align straight ahead and stop.
7. Click the CAPTURE N button.

   Note: The sensor value changes as you turn the steering wheel.

Verifying / Checking the WAS Calibration Values

1. Ensure that your values are within the minimum and maximum ranges as listed.

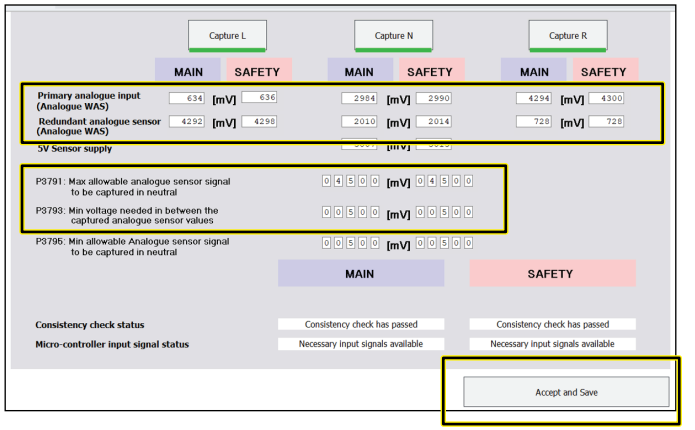

g489522

Figure 182

2. Click the ACCEPT AND SAVE button.

Running Spool Calibration Process

1. Turn the steering wheel as needed to position the front tires straight ahead.
2. In the System Navigator tab, navigate to the AUTO CALIBRATION directory, expand the directory, and click on SPOOL CALIBRATION.

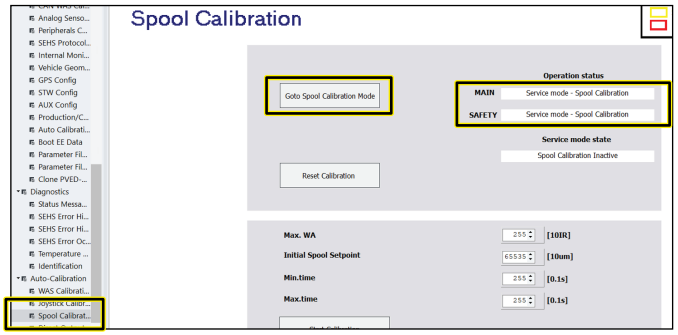

g489521

Figure 183

3. On the spool calibration page, click the GOTO SPOOL CALIBRATION MODE button.
4. Click the START CALIBRATION button.

   Note: The service mode state must display Spool Calibration Armed before starting calibration.

   Important: **Do not touch the steering wheel.**

   The steering wheel moves while spool calibrations proceeds. The spool calibration process takes several minutes. Note that the wheel movement status changes in Status tab. Calibration is finished when Service Mode State field displays SPOOL PARAMETERS READY TO UPDATE.

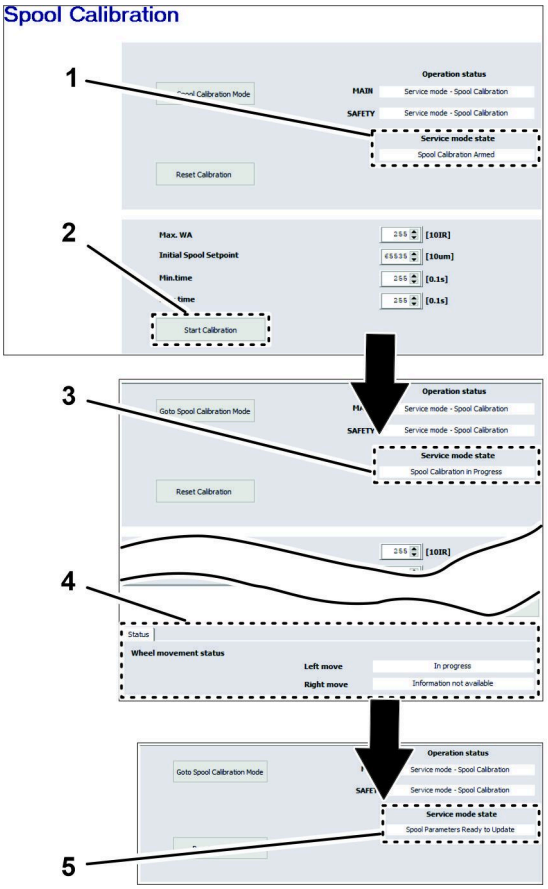

g302250

Figure 184

1. Service mode state field—SPOOL CALIBRATION ARMED
2. START CALIBRATION icon
3. Service mode state field—SPOOL CALIBRATION IN PROGRESS
4. Wheel movement status
5. Service mode state field—SPOOL PARAMETERS READY TO UPDATE

5. At the bottom of the spool calibration screen, click the ACCEPT AND SAVE icon (Figure 185).

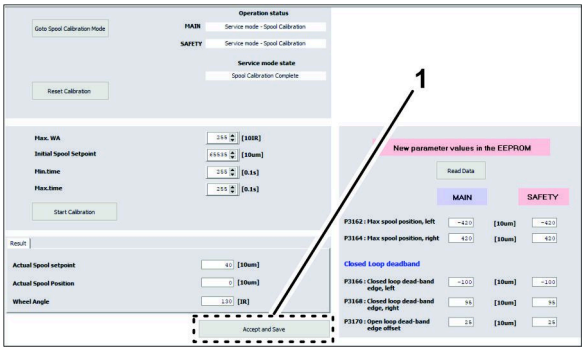

g302248

Figure 185

1. ACCEPT AND SAVE icon

6. Shut off the engine.
7. Remove the connector of the USB/CAN interface cable from the connector of the kit wire harness, and install the cap onto the wire harness connector.

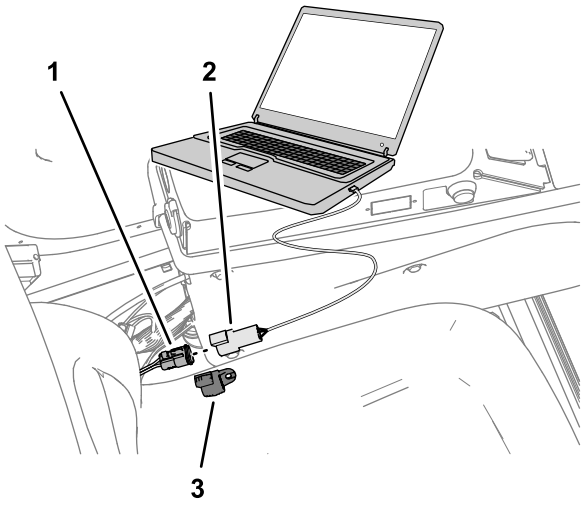

g302258

Figure 186

1. 3-socket connector (labeled DUPLICATE DIAG CONNECTOR—kit wire harness)
2. 3-pin connector (USB/CAN interface cable)
3. Cap

Schematics

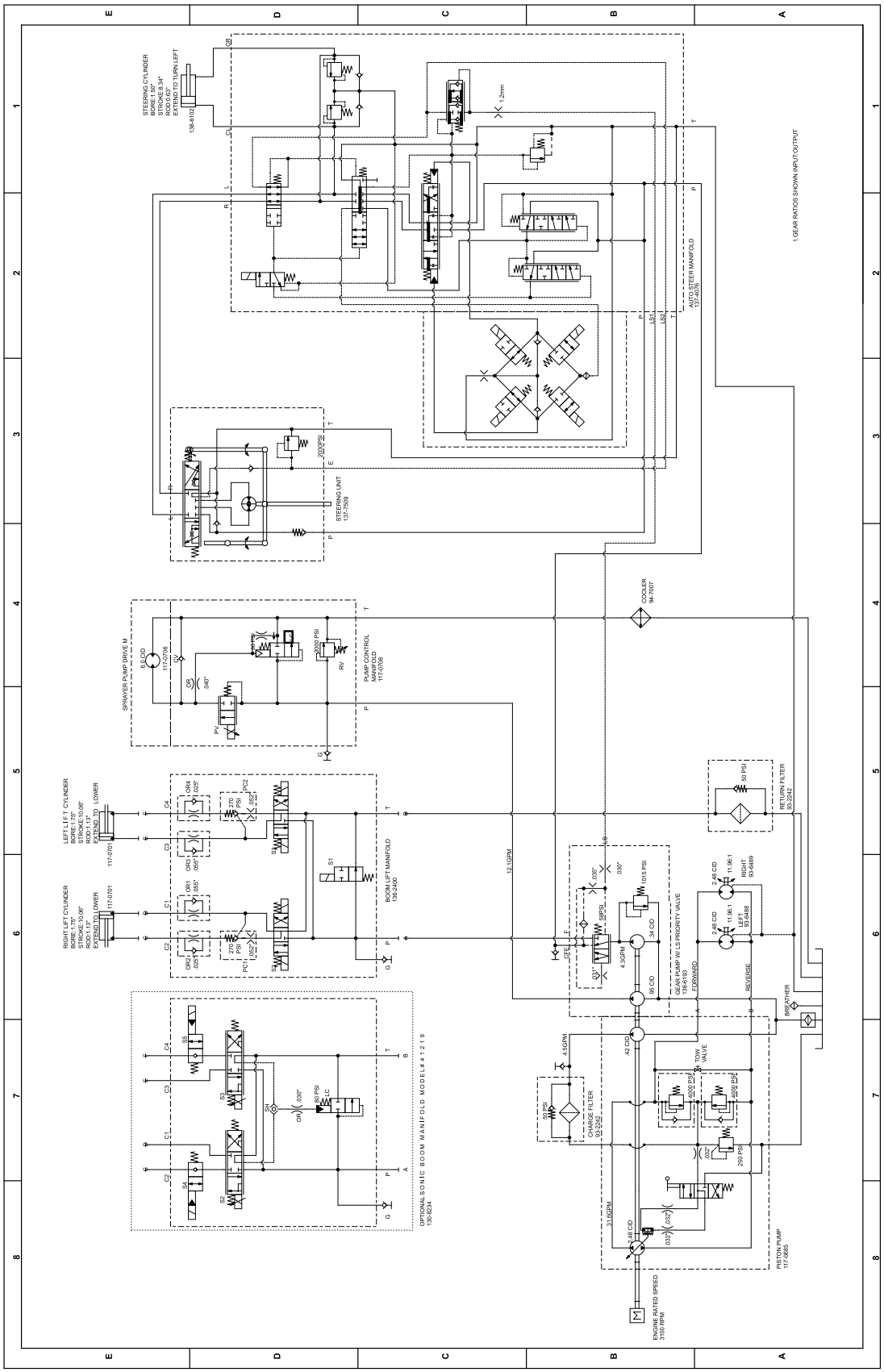

g300521

Hydraulic Schematic 138-6255 (Rev. A)

Notes:



Count on it.