FORM NO. 42888

TORO®

MODEL NO. 41502-20101 & UP

OPERATOR'S MANUAL

MULTI-PRO 5200
VEHICLE

To assure maximum safety, optimum performance, and to gain knowledge of the product, it is essential that you or any other operator of this Vehicle read and understand the contents of this manual before the engine is ever started. Pay particular attention to the SAFETY INSTRUCTIONS highlighted by this symbol —

The safety alert symbol means CAUTION, WARNING or DANGER — personal safety instruction. Failure to comply with the instruction may result in personal injury.

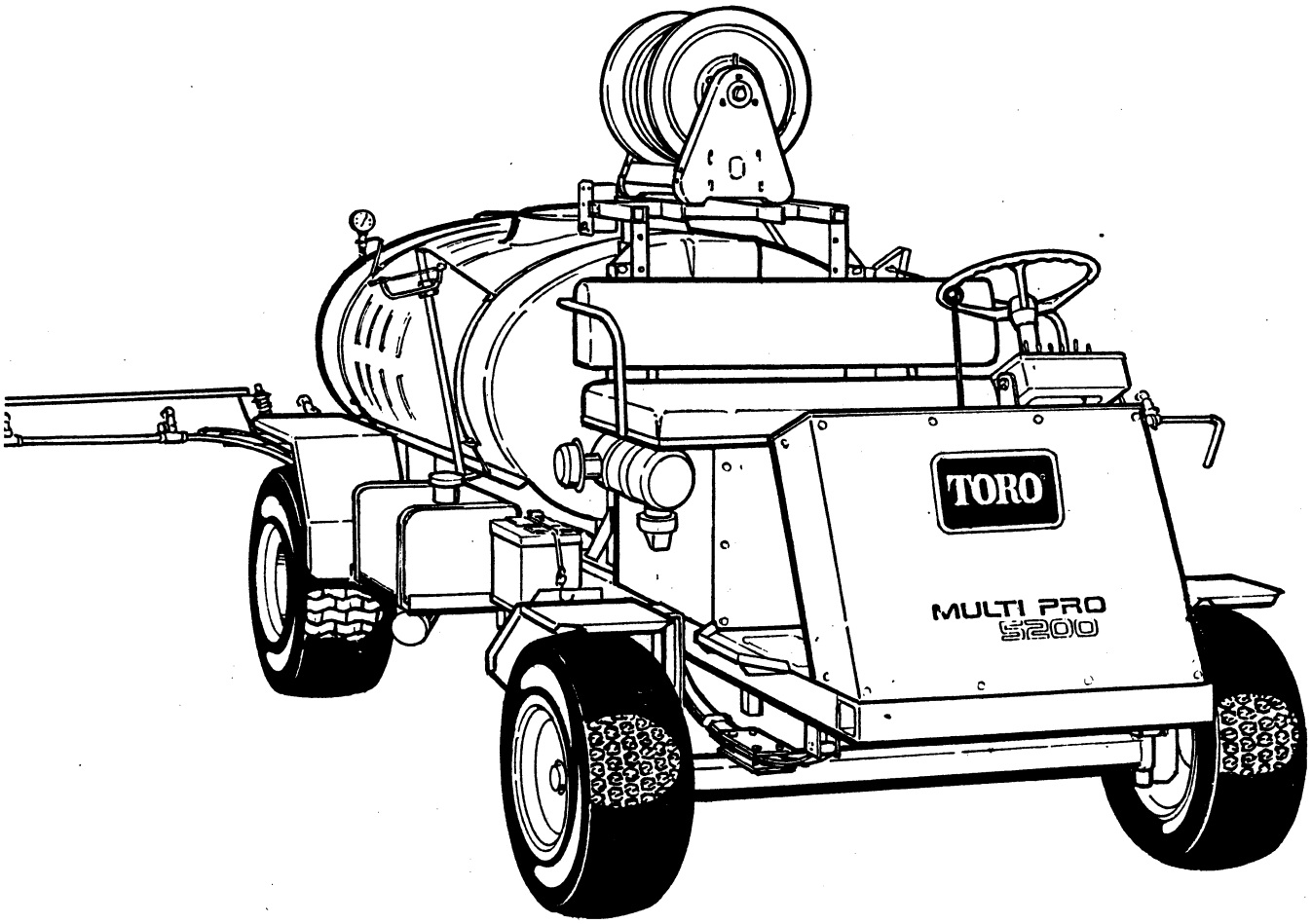

©The Toro Company-1992

IDENTIFICATION NUMBERS

MULTI-PRO 5200 VEHICLE

MODEL NO. 41502-20101 & UP

VEHICLE SERIAL NUMBER _____

ENGINE MODEL: VSG4131 6007 Z
SERIAL NUMBER _____

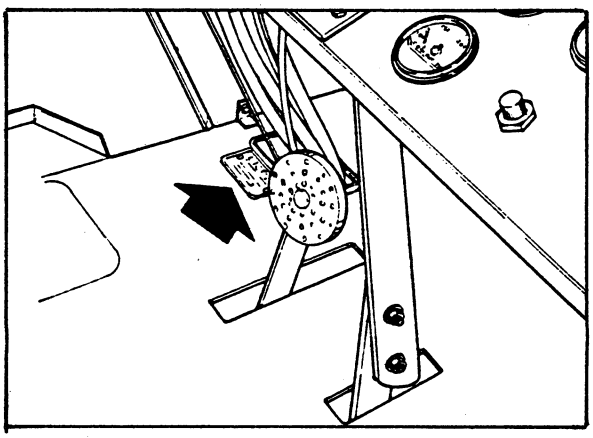

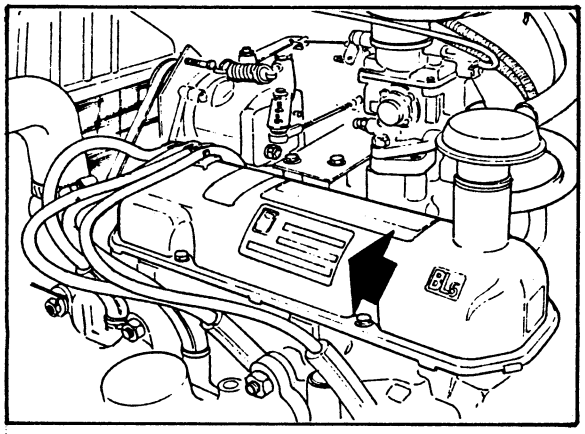

Record these numbers in the space above as soon as possible as it is necessary to include this information when ordering service parts or requesting information. Fill out the individual warranty cards and mail immediately.

Date Purchased.....

This vehicle is not a motor vehicle as defined by the National Traffic Motor Vehicle Safety Act. It is not designed or manufactured for use on roads, streets or highways and is not to be licensed as a motor vehicle.

Be sure to record the key code number which is stamped on your Ignition Keys. If original Keys are lost, duplicates can be made, but it will be necessary to provide the key code numbers. Contact any "All Lock" dealer or locksmith to duplicate your specific key. The key code number is also engraved on the body of the Ignition Switch.

KEY CODE NUMBER

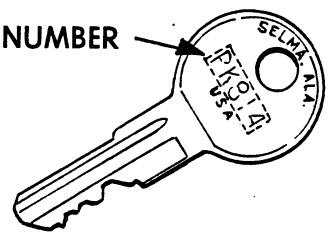

KEY CODE NUMBER _____

All information, illustrations and specifications in this manual are based on the latest product information available at the time of publication. The right is reserved to make changes at any time without notice.

safety

RECOGNIZE SAFETY INFORMATION



This safety-alert symbol is used to call attention to a dangerous situation, which could result in serious injury or death to the operator, a passenger or a bystander.



Follow recommended precautions and safe operating practices.

It is important to always replace any lost or damaged safety-alert and informational decals on the vehicle and accessories immediately.

UNDERSTAND SIGNAL WORDS

⚠ DANGER

⚠WARNING

⚠CAUTION

Be aware of the symbols and signal words used throughout this manual.

A signal word—DANGER, WARNING, or CAUTION—is used with the safety-alert symbol. DANGER identifies the most serious hazards.

Safety signs with signal word DANGER or WARNING are typically near specific hazards.

General precautions are listed on CAUTION safety signs. CAUTION also calls attention to safety messages in this manual.

IMPORTANT!

NOTE:

Instructions beginning with the signal words **"IMPORTANT"** or **"NOTE"**, provide essential information regarding the operation and maintenance of this machine.

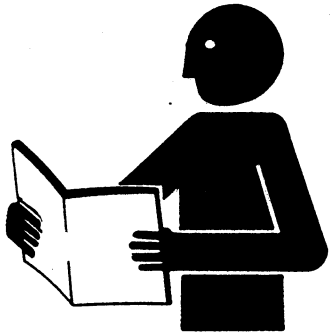

FOLLOW SAFETY INSTRUCTIONS

Read this manual and the engine manual BEFORE attempting to operate the vehicle. It is important that ALL operators of this vehicle have easy access to these instructions and safety information at all times. Keep this manual, the engine manual and any accessory manuals, in the plastic tube behind the operator seat when not in use.

Carefully read all safety messages in this manual and on your machine safety signs. Keep safety signs in good condition. Replace missing or damaged safety signs.



Learn how to operate the machine and how to use controls properly. Do not let anyone operate without instruction.

Keep your machine in proper working condition. Unauthorized modifications to the machine may impair the function and/or safety and affect machine life.

Read the engine manufacturer's operating instructions. Make note of the safety-alert messages and follow them.

OPERATE SAFELY

This manual is provided as a guide in the safe operation and proper maintenance of this vehicle. However, the operator's personal safety, as well as those persons in the work area, will depend on the careful actions and good judgement of the operator.



DO NOT operate the vehicle in or near any area where there are explosive fumes or dust. This vehicle's electrical and exhaust systems will make sparks . . . which can ignite explosive fumes or dust!

This vehicle is designed to carry the OPERATOR and ONE PASSENGER ONLY. DO NOT permit any other person on this vehicle. DO NOT allow any passenger to ride anywhere other than the seat provided by the manufacturer. Make sure the passenger uses the hand holds provided.

DRIVE SAFELY

Always SLOW the vehicle when approaching, and while making, a turn.

Always SLOW the vehicle when driving in unfamiliar areas or over rough terrain.

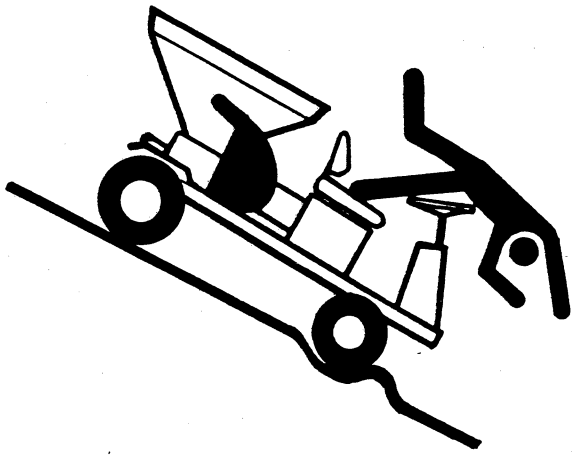

Always SLOW the vehicle when changing the direction of travel or preparing to stop.

DO NOT make sudden or sharp turns or change direction of travel, on an incline, ramp, grade, slope or similar surface.

Adjust the vehicle speed to allow for existing conditions such as wet, slick surfaces, low visibility, etc.

Drive the vehicle UP and DOWN the face of the slopes, inclines or grades whenever possible. DO NOT drive ACROSS the face if at all possible. There is a risk of upsetting the vehicle, which can result in serious injury or death.

Be especially careful when driving a heavily loaded vehicle down an incline or slope. SLOW the vehicle with the Vehicle Drive Control Lever. In case of the need for an emergency stop, use the foot brake.

Keep both hands on the steering wheel whenever possible. Keep all body parts within the vehicle while it is moving. Arms and legs sticking out past the vehicle sides could be seriously injured by nearby objects being passed.

PREVENT MACHINE RUNAWAY



Avoid possible injury or death from machinery runaway.

Do not start engine by shorting across starter terminals. Machine will start in gear if normal circuitry is bypassed.

NEVER start engine while standing on ground. Start engine only from operator's seat, with transmission in neutral or park.

AVOID TIPPING



Do not drive where machine could slip or tip.

Stay alert for holes, rocks, and roots in the terrain, and other hidden hazards. Keep away from drop-offs.

Slow down before you make a sharp turn.

The center of gravity is higher when sprayer tank or hopper is full, and vehicle can tip at any speed.

PROTECT BYSTANDERS

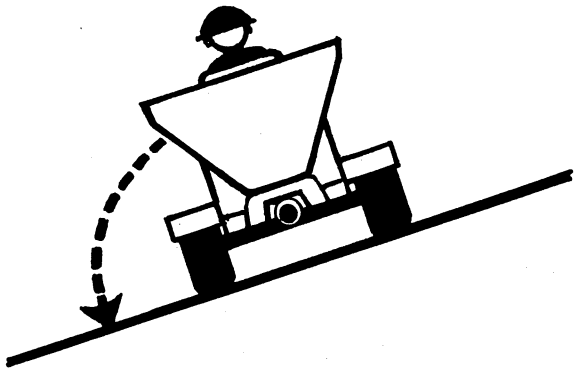

DO NOT operate near bystanders, ramp edges, platforms or other equipment. Watch for overhead obstacles, low hanging tree limbs, door jambs, etc.

Be aware of your surroundings, bystanders and other equipment. Always back the vehicle carefully and only at a reasonable speed. ALWAYS look to be sure there is no one behind you!

PARK SAFELY

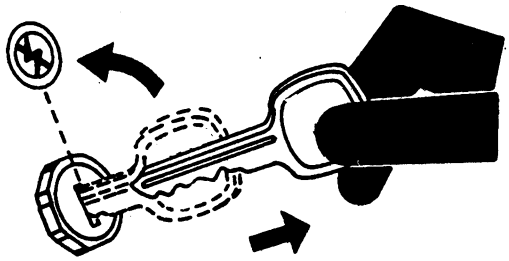

Disengage all power, shut off engine, and be sure all moving parts have stopped before servicing, lubricating, or unclogging machine.

Always stop engine and remove key before leaving operator's seat. Do not leave engine running unattended.

Park vehicle with park brake engaged.

HANDLE FUEL SAFELY—AVOID FIRES



Handle fuel with care: it is highly flammable. Do not refuel the machine while smoking or when near open flame or sparks.

Always stop engine before refueling machine. Fill fuel tank outdoors.

Prevent fires by keeping machine clean of accumulated trash, grease, and debris. Always clean up spilled fuel.

AVOID INJURY FROM MOVING PARTS

Keep hands, feet, and clothing away from power-driven parts.

Never clean, lubricate or adjust machine while it is running.

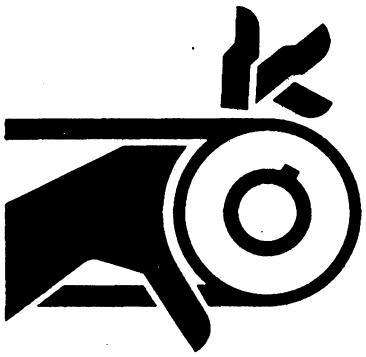

STAY CLEAR OF ROTATING DRIVELINES

Entanglement in rotating driveline can cause serious injury or death.

Keep tractor master shield and driveline shields in place at all times. Make sure rotating shields turn freely.

Wear close fitting clothing. Stop the engine and be sure PTO driveline is stopped before making adjustments, connections, or cleaning out PTO driven equipment.

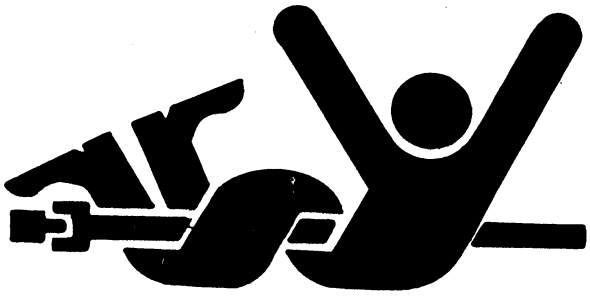

AVOID HIGH-PRESSURE FLUIDS

Escaping fluid under pressure can penetrate the skin causing serious injury. Relieve pressure before unhooking hydraulic or other lines. Tighten all connections before applying pressure. Keep hands and body away from pinholes and nozzles which eject fluids under high pressure. Use a piece of cardboard to search for leaks.

If ANY fluid is injected into the skin, it must be surgically removed within a few hours by a doctor familiar with this type injury or gangrene may result.

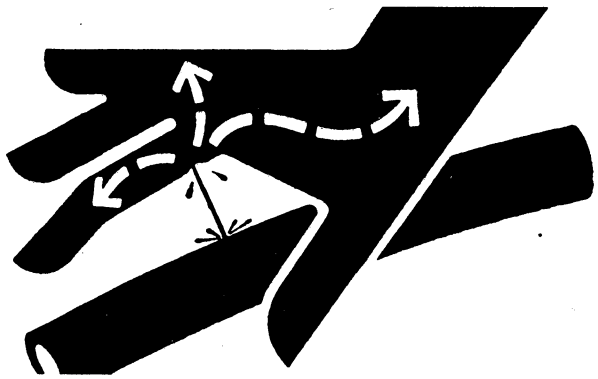

PREPARE FOR EMERGENCIES

Be prepared if a fire starts.

Keep a first aid kit and fire extinguishers handy.

Keep emergency numbers for doctors, ambulance service, hospital, and fire department near your telephone.



PRACTICE SAFE MAINTENANCE

Understand service procedure before doing work. Keep area clean and dry.

Never lubricate or service machine while it is moving. Keep hands, feet, and clothing from power-driven parts. Disengage all power and operate controls to relieve pressure. Lower equipment to the ground. Stop the engine. Remove the key. Allow machine to cool.



Securely support any machine elements that must be raised for service work.

Keep all parts in good condition and properly installed. Fix damage immediately. Replace worn or broken parts. Remove any buildup of grease, oil, or debris.

Disconnect battery ground cable (−) before making adjustments on electrical systems or welding on machine.

Remove all traces of fertilizer from cavities and tubes before any type welding takes place.

Always use the hydraulic lock when servicing vehicle with utility bed raised.

INSPECT MACHINE SAFELY

Always check all parts of the vehicle and any attachments before actual use. If there is a problem, make sure it is corrected BEFORE the unit is put in operation.

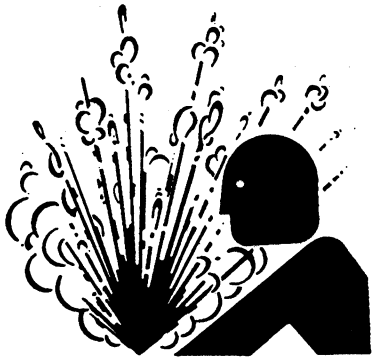

Foam marker tank is under pressure. Shut off compressor and put control handles in the open position while servicing the foam marker tank.

Shields and guards must be in place and in good condition before starting.

Keep nuts, bolts, and all connections tight. Replace worn parts.

SERVICE TIRES SAFELY

Failure to follow proper procedures when mounting a tire on a wheel or rim can produce an explosion which may result in serious injury or death. Do not attempt to mount a tire unless you have the proper equipment and experience to perform the job. Have it done by your distributor or a qualified tire repair service.

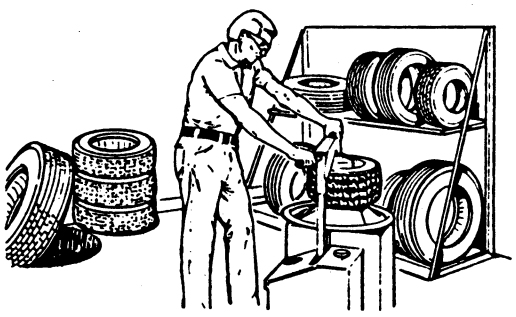

When sealing tire beads on rims, never exceed 35 psi (241 kPa) (2.4 bar) or maximum inflation pressures specified by tire manufacturers for mounting tires. Inflation beyond this maximum pressure may break the bead, or even the rim, with dangerous explosive force. If both beads are not seated when the maximum recommended pressure is reached, deflate, reposition tire, relubricate bead, and reinflate.

WEAR PROTECTIVE CLOTHING

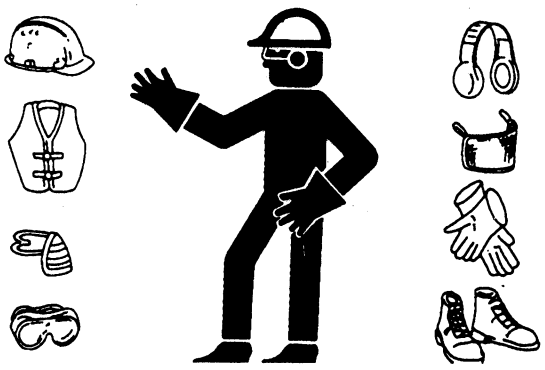

Wear close fitting clothing and safety equipment appropriate to the job.

Prolonged exposure to loud noise can cause impairment or loss of hearing.

Wear a suitable hearing protective device such as earmuffs or earplugs to protect against objectionable or uncomfortable loud noises.

BATTERY PRECAUTIONS

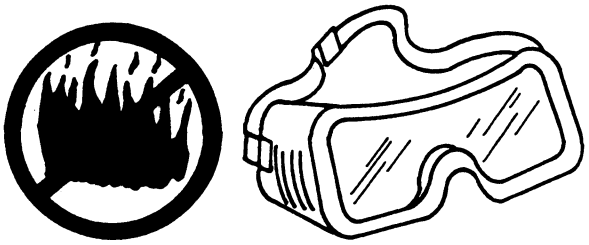

Batteries generate explosive gases. Keep sparks, flames, burning cigarettes, or other ignition sources away at all times. Always wear safety goggles when working near batteries.

PREVENT BATTERY EXPLOSIONS



Battery gas can explode. Keep sparks and flames away from batteries. Use a flashlight to check battery electrolyte level.

Never check battery charge by placing a metal object across the posts. Use a voltmeter or hydrometer.

Always remove grounded (-) battery clamp first and replace it last.

AVOID ACID BURNS

Sulfuric acid in battery electrolyte is poisonous. It is strong enough to burn skin, eat holes in clothing, and cause blindness if splashed into eyes.

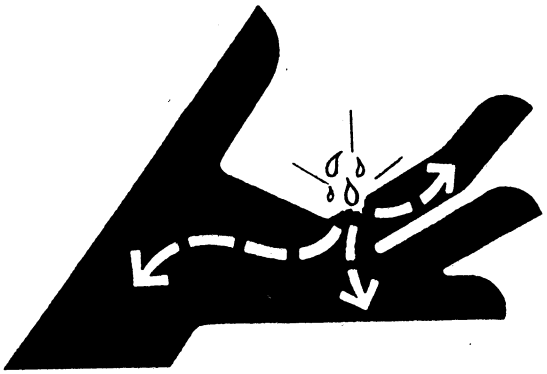

Avoid the hazard by:
1. Filling batteries in a well-ventilated area.
2. Wearing eye protection and rubber gloves.
3. Avoiding breathing fumes when electrolyte is added.
4. Avoiding spilling or dripping electrolyte.

If you spill acid on yourself:
1. Flush your skin with water.
2. Apply baking soda or lime to help neutralize the acid.
3. Flush your eyes with water for 10-15 minutes. Get medical attention immediately.

If acid is swallowed:
1. Drink large amounts of water or milk.
2. Then drink milk of magnesia, beaten eggs, or vegetable oil.
3. Get medical attention immediately.

AVOID TOXIC FUMES

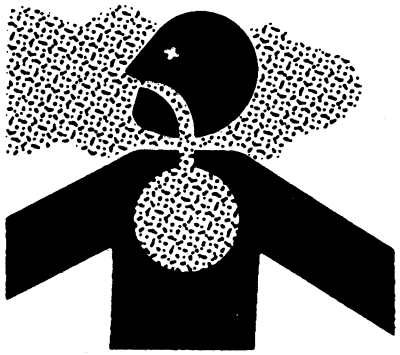

Some chemicals are toxic and, in sufficient quantities, may be fatal. Ill effects or death does not have to be from direct contact.

Wear a filtered respirator. Wear goggles to protect your eyes.

Keep dust away from skin and hair.

Keep containers low when pouring.

Let the wind blow fumes away from you when mixing or filling.

Use chemicals only in applications for which they are recommended.

Clean equipment in a recommended manner.

HANDLE CHEMICALS SAFELY



Chemicals can be dangerous. Improper selection or use can injure persons, animals, plants, soils or other property.

Select the right chemical for the job.

Handle and apply chemicals with care.

Follow instructions issued by chemical manufacturer.

Study all labels carefully. DO NOT remove labels.

Wear goggles to protect your eyes.

Wash exposed skin areas frequently—do not leave chemicals on your skin.



Do not smoke while handling chemicals.

Properly dispose of chemical containers, unused chemicals and left-over treated seed and fertilizer.

Read and observe manufacturer's recommendations.

Remove clothing and bathe skin immediately if chemicals contact skin. Launder contaminated clothing.

Wash hands before eating.

Apply chemicals at recommended time, rate, and manner. Do not allow chemicals to drift to neighboring areas.

See a physician immediately if symptoms of illness occur during or shortly after the use of any chemicals.

Store chemicals in a separate, plainly marked, LOCKED building.

Store chemicals in original containers with labels intact.

Federal and state laws govern the use of chemicals. Before using any chemical, consult state agricultural agent or chemical supplier for proper uses.

See a physician or druggist for first aid kits and learn how to use them.

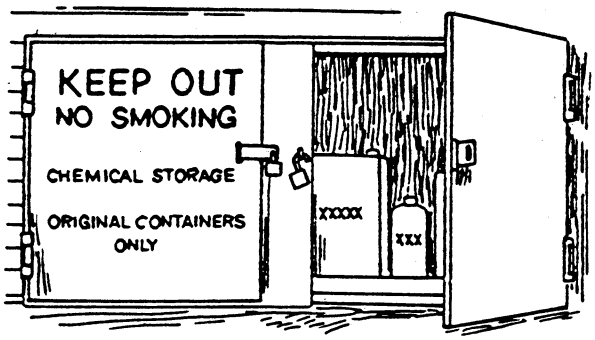

INSTALLING AND USING ATTACHMENTS:

Always read the operating instructions that are included with the accessories BEFORE actually operating the unit. Carefully read and follow any "set-up" instructions that are given.

The installation of accessories on the TORO vehicle other than those designed and sold for that express purpose by TORO may adversely affect the performance and safety characteristics of this vehicle.

The addition of accessories, with their added weight and bulk will make the vehicle somewhat less stable. When turning or driving on slopes, always SLOW the vehicle before making a turn, and then SLOWLY turn the vehicle to prevent loss of control and possibly upset the vehicle.

DO NOT OVERLOAD THE VEHICLE. Maximum load limits are shown on decals used on all accessories . . . do not exceed these limits.

Failure to position loads carefully can result in their shifting or tipping over suddenly, causing the vehicle to upset.

Distribute loads evenly, keeping them low so as to prevent the vehicle from becoming top-heavy. When loading the cargo bed, have heavy loads to the front of the rear axle. Heavy loads in back of the rear axle can raise the front wheels clear of the ground, causing a loss of steering control and making the vehicle unstable.

Keep all Decals in good condition. Replace missing or damaged Decals as soon as possible.



#41162 Located on top of engine.

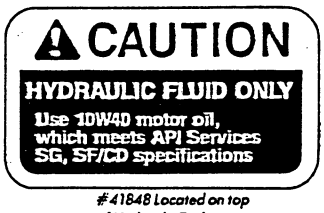

#41848 Located on top of Hydraulic Tank.

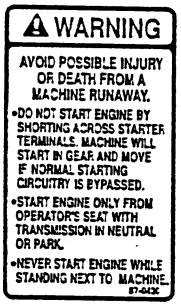

#87-0430 Located on Dash Panel on right-hand side of Steering Column.

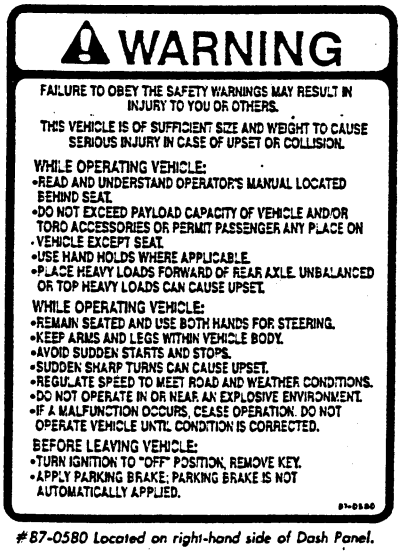

#87-0580 Located on right-hand side of Dash Panel.



#41914 Located on Dash Panel next to Vehicle Drive Control Lever.

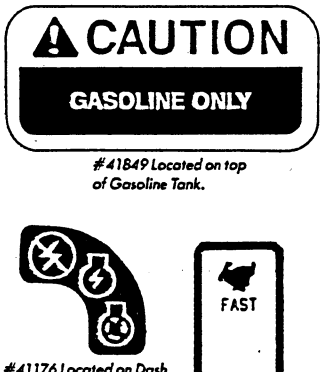

#41849 Located on top of Gasoline Tank.

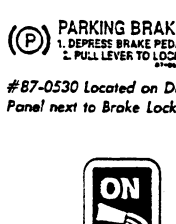

#87-0530 Located on Dash Panel next to Brake Lock.

#41176 Located on Dash Panel next to Key Switch.

#41175 Located on front of Seat Support next to Throttle Control.



#41174 Located next to Directional Control Valve.

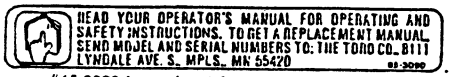

#65-3090 Located on left-hand side of Dash Panel.



#76-8750 Located on left-hand Radiator Brace.

pre-use service

IMPORTANT: THE BATTERY ON THIS VEHICLE MUST BE BROUGHT TO A FULL CHARGE PRIOR TO CONNECTING THE BATTERY CABLES AND OPERATION OF THE VEHICLE

CAUTION: Batteries contain sulfuric acid . . . avoid contact with skin, eyes, or clothing. Batteries produce explosive gas when being charged. Ventilate area when charging battery. Keep cigarettes, open flame and sparks away from battery at all times. Keep batteries and acid out of reach of children. Remove all jewelry when working on battery.

After bringing the battery to a full charge:

- Connect the positive (+) cable first, and cover the terminal with the rubber protective cap.
- ALWAYS connect the negative (−) cable last.

ELECTRICAL SYSTEM:

DO NOT connect the battery cables until all wiring harness connections have been made and properly tightened.

If accidentally grounded, the lead to the battery teminal will burn the wiring harness.

IMPORTANT!

Spark arrestors are required by California Public Resources Code, Sections 4428-4422, when operating any internal combustion engine on hydrocarbon fuels, on forest, brush or grass-covered lands.

When removing battery from equipment, always disconnect the negative (−) (ground) cable first.

When replacing battery, connect the negative (−) (ground) cable last.

Disconnect battery before any welding by removing negative (−) (ground) cable first.

IMPORTANT!

When towing or otherwise attempting to move the MULTI-PRO without engine power, it is necessary to engage the Tow Valve on top of the Piston Pump Failure to do so will result in damage to the hydrostatic Piston Motor. See FIG. 8, page 16.

vehicle gauges and controls

Familiarize yourself with the controls and recommended operating procedures before operating the MULTI-PRO. These procedures will help to maintain the efficient performance this machine was designed to deliver.

VEHICLE DRIVE CONTROL LEVER: Controls the direction and ground speed of the Vehicle. Pushing the Control Lever forward, away from the operator, will move the Vehicle forward. Pushing the Lever further forward, increases the speed of the forward motion. Pulling the Lever back, towards the operator, will move the Vehicle backward.

The Vehicle Control Lever provides positive braking action. The Vehicle speed decreases as the Lever is moved toward NEUTRAL. With the Lever in NEUTRAL, the Vehicle stops.

Any movement of the Control Lever away from the NEUTRAL position, whether to slow, speed-up or stop the Vehicle, should be a slow and steady motion.

PARKING/EMERGENCY BRAKE: Functions as a "safe starting" control, as a parking brake and as an emergency brake in situations demanding an immediate stop.

When starting the engine or parking on hills or slopes...

- Fully depress the Brake Pedal and pull up on the Brake Lock to lock the Brake Pedal in position.
- After engine has started, fully depress the Brake Pedal again to release the Brake Pedal Lock.

To stop the Vehicle in an emergency (such as a person or another vehicle crossing your path, or a loss of hydraulic power) depress the Brake Pedal until the Vehicle comes to a stop. DO NOT USE THE BRAKE PEDAL TO STOP THE VEHICLE ON A ROUTINE BASIS! USE THE VEHICLE DRIVE CONTROL LEVER FOR NORMAL OPERATING STOPS.

BRAKE LOCK: Locks the Brake Pedal in a depressed position for starting the engine or to act as a Parking Brake. Depress the Brake Pedal and lift the Knob to lock. Depress the Brake Pedal again and the Brake Lock is disengaged to release the Brake Pedal.

HOUR METER: Records the number of hours that the engine has been operated. To be used as an aid in scheduling equipment maintenance.

"Right" and "Left" as used in this manual refers to the operator's right or left, when seated in the normal operating position. Likewise, "Front" and "Rear" as seen from the operator's position.

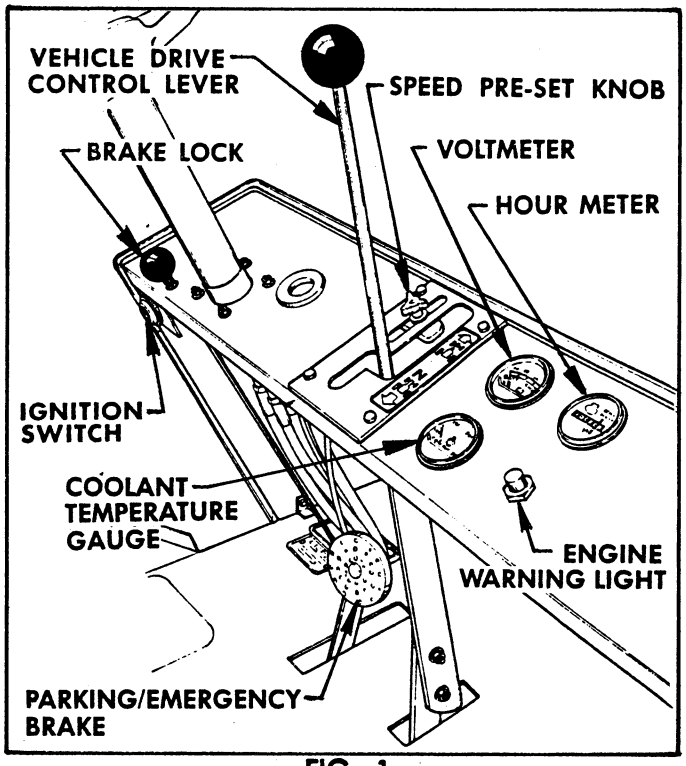

FIG. 1

VOLTMETER: Indicates the battery voltage when the ignition key is in the ON position. After the engine is started, the pointer will move into the white marked area, and in normal operation, remain there. (12.8-14.8 volts) If the pointer remains in either red marked area, have the engine's electrical system checked.

COOLANT TEMPERATURE GAUGE: Indicates the temperature of the engine coolant when the ignition switch is in the ON or ACC position. The pointer will move to the NORMAL band as the engine warms up. When operating in hot weather or with very heavy loads, the pointer may read at the very top of the NORMAL band. If the pointer moves out of the NORMAL band into the H (hot) position, the engine is over heating and engine damage may result. Idle the engine for 2 minutes, turn off the engine and let it cool. See the engine manual, pages 8 and 21.

ENGINE WARNING LIGHT: Indicates dangerously low oil pressure. If light comes on with the engine running, STOP as soon as possible and correct the cause of low oil pressure before re-starting the engine.

SPEED PRE-SET KNOB: Provides an adjustable stop, used to position the Vehicle Drive Control Lever at a point that moves the Vehicle at a selected ground speed.

vehicle operation

IMPORTANT!

SEE THE FORD ENGINE MANUAL FOR "INITIAL START-UP" PROCEDURES, (PAGE 18)

ALWAYS CHECK THE OIL AND COOLANT LEVELS BEFORE STARTING THE ENGINE. Make sure the engine is stopped and the engine is parked on a level surface. Allow time for the engine to cool and oil to drain into the sump.

NOTE: Turn the ignition switch to the ON position to make sure the warning light is operating before starting the engine.

STARTING THE ENGINE:

CAUTION! Start the engine ONLY outdoors or in a well ventilated area. Exhaust fumes are very dangerous

NOTE: As a safety feature the MULTI-PRO is designed so that the engine cannot be started until the Brake Pedal is fully depressed (and locked in Place) and the Vehicle Drive Control Lever is in NEUTRAL.

CAUTION! If the engine WILL start, when the Brake Pedal is NOT depressed and/or the Vehicle Drive Control Lever is NOT in NEUTRAL... DO NOT OPERATE THE VEHICLE! Have the Neutral Start Switch repaired immediately!

- Move the Throttle Lever to midway between "SLOW" and "FAST" positions.
- Pull the Choke up to full choke position, (if engine is cold)
- Turn the Ignition Key to the full right (Start). Release the Key as soon as the engine starts.

CAUTION: Do not hold Key in starting position longer than 30 seconds at one time. If the engine does not start, wait at least 2 minutes before attempting to start again.

- Gradually push the Choke Control down to the "OFF" position as the engine starts and warms up.
- Position the Throttle Lever at the desired engine speed.
- Slowly move the Vehicle Drive Control Lever away from the NEUTRAL position, in the desired forward or reverse direction.
- Slowly push the Lever forward to increase the speed of the forward motion, or...Slowly pull the Lever backward to increase the reverse motion.

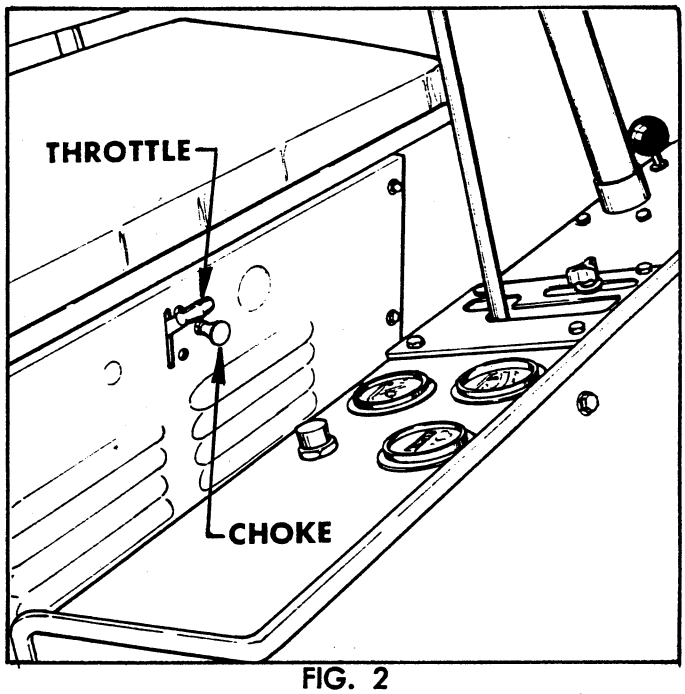

FIG. 2

CAUTION! Be especially careful when driving in reverse!

Move the Vehicle Drive Control Lever to NEUTRAL and the Vehicle will stop.

When changing direction of travel or making momentary stops, slowly move the Vehicle Drive Control Lever to NEUTRAL. When stopping on a hillside or slope, always use the Parking Brake to prevent the Vehicle from "creeping".

STOPPING THE ENGINE:

NOTE: If the engine has been running under high power, let it run at fast idle speed a few minutes to cool the engine down, before turning the ignition switch to OFF position.

NOTE: Do not pull out on Choke to "prime" the engine for the next start. Raw gasoline will wash oil from the cylinder walls and cause engine damage when engine is re-started without proper lubrication.

- Move the Throttle Lever to "SLOW" and turn Ignition Key to "OFF."
- Remove the Ignition Key and engage the Emergency/Parking Brake.

CAUTION! NEVER leave the Vehicle unnattended with the engine running. ALWAYS bring the Vehicle to a full stop, engage the Emergency/Parking Brake and lock it, turn the Ignition Switch to OFF and remove the key.

maintenance schedule

The Maintenance Schedule in this Manual specifies maintenance and lubrication periods based on normal operating conditions. Check and service the MULTI-PRO and its attachments more frequently when operating in extremely cold, hot or dusty conditions.

For additional engine maintenance information, see the FORD Engine Manual. Use a high quality, anti-knock 87 (minimum) octane gasoline.

	HOURS OF OPERATION									
	daily	50	100	200	300	400	500	600	700	800
Replace Hydraulic Filter AFTER FIRST FIVE HOURS										
Check Engine Oil Level	X									
Check/Clean Air Cleaner	X									
Check Engine Coolant Level	X									
Check for Fuel, Oil and Coolant Leaks	X									
Check Tire Pressures	X									
Check Hydraulic Fluid Level	X									
Replace Hydraulic Filter AFTER FIRST FIFTY HOURS		X			X			X		
Check Differential Oil Level		X	X	X	X	X	X	X	X	X
Replace Air Filter Element			X	X	X	X	X	X	X	X
Change Engine Oil and Filter			X	X	X	X	X	X	X	X
Check Battery Charge & Level			X	X	X	X	X	X	X	X
Check Governor Oil Level			X	X	X	X	X	X	X	X
Clean Crankcase Breather Cap			X	X	X	X	X	X	X	X
Inspect and Clean Radiator Exterior				X		X		X		X
Clean Battery Terminals				X		X		X		X
Check and Adjust Tension of Fan, Alternator & Governor Belts.				X		X		X		X
Lubricate Throttle, Governor and Choke Linkage.				X		X		X		X
Replace Fuel Filter						X				X
Check or Refill Radiator						X				X
Check and Adjust Idle Speed and Idle Mixture						X				X
Clean, Adjust and Test or Replace Spark Plugs						X				X
Check and Adjust Valve Clearance						X				X
Replace PCV Valve										X
Adjust Throttle and Governor										X
Replace Coolant										X
Torque Intake Manifold Bolts										X
Check Tightness of All Bolts and Nuts										X

CAUTION! Disengage all power, shut off the engine and be sure all moving parts have stopped BEFORE servicing, lubricating or unclogging this machine.

ENGINE CRANKCASE OIL & FILTER:

IMPORTANT!

SEE THE FORD ENGINE MANUAL FOR "INITIAL START-UP" PROCEDURES, (PAGE 18)

Check the oil level daily, before engine start-up, while engine is cool. Have the machine on a level surface with the engine OFF. Maintain the oil level between the minimum and maximum marks on the dipstick. Do not operate the engine with the oil level below the bottom mark. Never add oil above the top mark.

IMPORTANT!

SEE THE FORD ENGINE MANUAL FOR DETAILED INSTRUCTIONS REGARDING MAINTENANCE, LUBRICATION AND ADJUSTMENTS OF THE ENGINE.

AIR CLEANER:

Service daily if engine is operated in very dusty and dry conditions. **Extensive damage can result from operating with a dirty Air Cleaner.**

- Squeeze the Vacuator Valve to eject dust and water.

After every 100 hours, more often under extremely dusty conditions,

- Loosen the Air Cleaner Strap and remove the Dust Cup.
- Remove the dirty element and discard.
- Wipe out the inside of the Air Cleaner housing with a damp rag. Check body and sealing surfaces for damage or build-up that may cause contaminant to leak into the Air Cleaner.
- Inspect the new element for any shipping damage. Install the new element and secure the Air Cleaner Strap.
- Check all ducting, piping hoses and clamp connections for leaks.

CAUTION! The engine and exhaust system can be extremely hot. Do not operate with any shrouds, covers or guards removed.

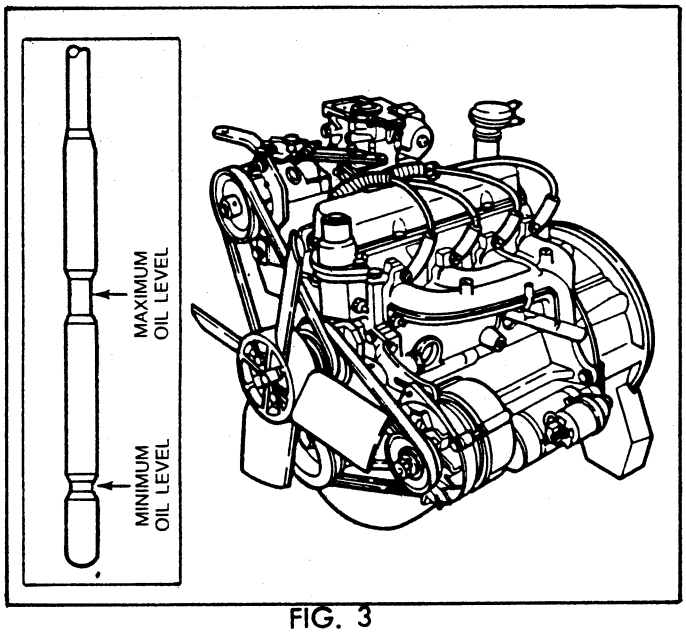

FIG. 3

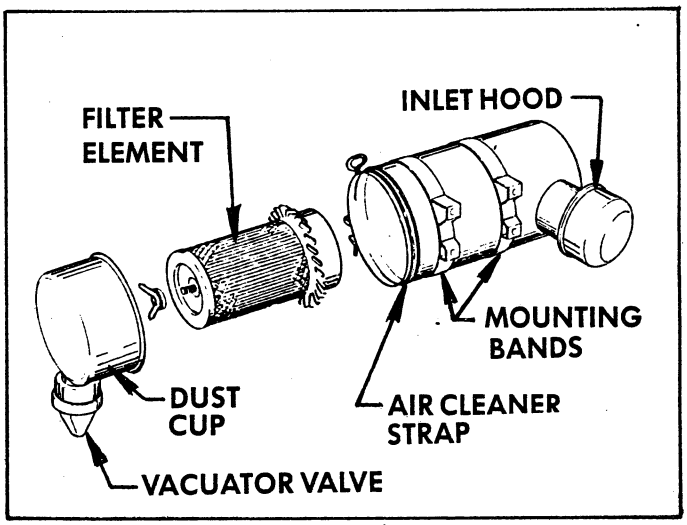

FIG. 4

maintenance cont.

HYDRAULIC RESERVOIR:

IMPORTANT

ALWAYS use extreme caution when filling the Reservoir or checking the level of the hydraulic oil, to keep the system free of contaminants.

Check the hydraulic fluid level daily and maintain at approximately 2 inches from the top. Replenish as required with 10W40 Motor Oil.

To fill and check the hydraulic system:

- Fill the hydraulic tank.
- Start the engine.
- Turn the Steering Wheel full left, then full right.
- Turn off the engine and recheck level of hydraulic fluid. Replenish as required.

HYDRAULIC SYSTEM FILTER:

IMPORTANT

Keeping the hydraulic system clean is essential. Servicing the Hydraulic Filter is critical to the life of the hydraulic system.

This unit is equipped with a "throw-away" type cartridge.

- CHANGE THE CARTRIDGE AFTER THE FIRST FIVE HOURS OF OPERATION.
- CHANGE THE CARTRIDGE AGAIN AFTER THE FIRST FIFTY HOURS OF OPERATION.
- CHANGE THE CARTRIDGE EVERY 300 HOURS THEREAFTER.

OIL COOLER:

Check frequently and keep free of any accumulation of dirt and debris.

COOLING SYSTEM:

Check the coolant level in the radiator daily, but **ONLY WHEN THE ENGINE IS COOL.**

⚠ **CAUTION: NEVER** remove the radiator cap, under any conditions, while the engine is operating. Use extreme care when removing the cap from a hot radiator...scalding hot coolant or steam can blow out of the radiator, causing serious injury! **NEVER** add coolant to an engine that has become overheated, until the engine has cooled.

Use a permanent-type coolant that meets Ford Specification ESE-M97B44-A. Maintain the coolant level at approximately 3/4 to 1-1/2 inches below the filler neck seat on the radiator, when the coolant is cold.

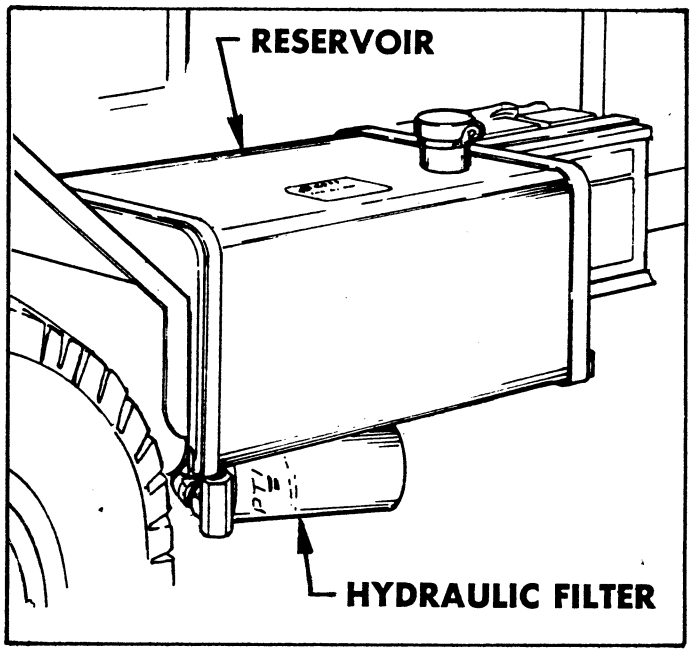

FIG. 5

NOTE: The Hydraulic Reservoir's fill-tube and cap are fitted with lugs which, with the addition of a lock, will help prevent the contamination of the hydraulic fluid.

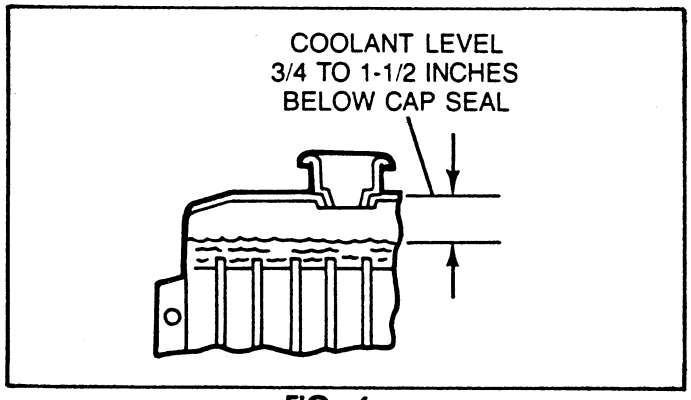

FIG. 6

The cooling system has a total capacity of 12 qts. (11.5 liters). A 50/50 mix of 6 qts. (5.75 liters) of anti-freeze to 6 qts. (5.75 liters) of water is recommended.

RADIATOR:

While checking coolant level, check condition of radiator cap rubber seal and the filler neck. Make sure both are kept clean.

Every 200 hours (more often in dusty areas) inspect the exterior for obstructions. Remove all bugs, dirt or foreign material with a soft brush or cloth. Use care not to damage the fins. If available, use low pressure air or a stream of water in the opposite direction to normal air flow.

DIFFERENTIAL

The Differential has a capacity of 6 U.S. pints (2.81 l). Check the oil level after first 50 hours of operation and every 100 hours therafter.

To check the oil level remove the pipe plug from the rear of the Differential housing. If oil does not run out, replenish with a high quality SAE 85-140 gear oil at temperatures above 32°F. Add oil until it begins to drip from hole where plug was removed.

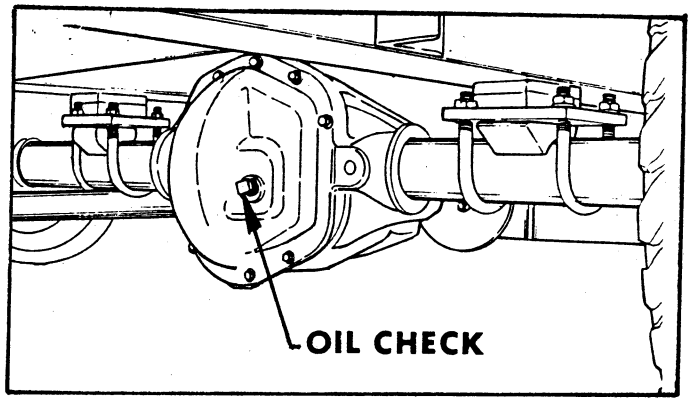

FIG. 7

TIRE PRESSURE:

Check the tires frequently and maintain the pressures at:

FRONT TIRES: 20 p.s.i. (max.)
REAR TIRES: 20 p.s.i. (max.)

Tire pressure is a matter of individual preference and Vehicle load. Once the desired pressure has been ascertained, it should be used as a factor in the computer programming and maintained, to insure the accuracy of the spraying system.

WHEEL TORQUE SPECIFICATIONS

After the "initial run-in" (approximately one to two hours) check all the fasteners for tightness. Particularly the Front and Rear Wheels. Check periodically thereafter and maintain the wheel nuts at:

FRONT WHEELS: 55-65 ft. lbs. (75-88 N-m)

REAR WHEELS: 75-85 ft. lbs. (102-116 N-m)

AFTER EVERY 50 HOURS:

Use a hand grease gun with a good grade of general purpose grease to lubricate through grease fittings at the

- UNIVERSAL JOINT
- FRONT AXLE SPINDLES (2)

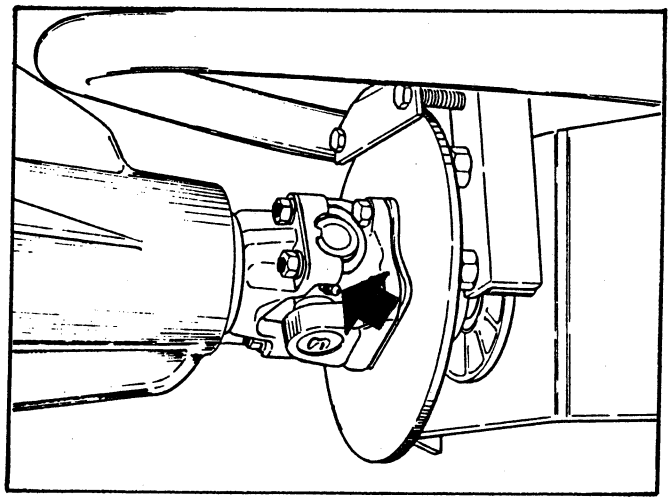

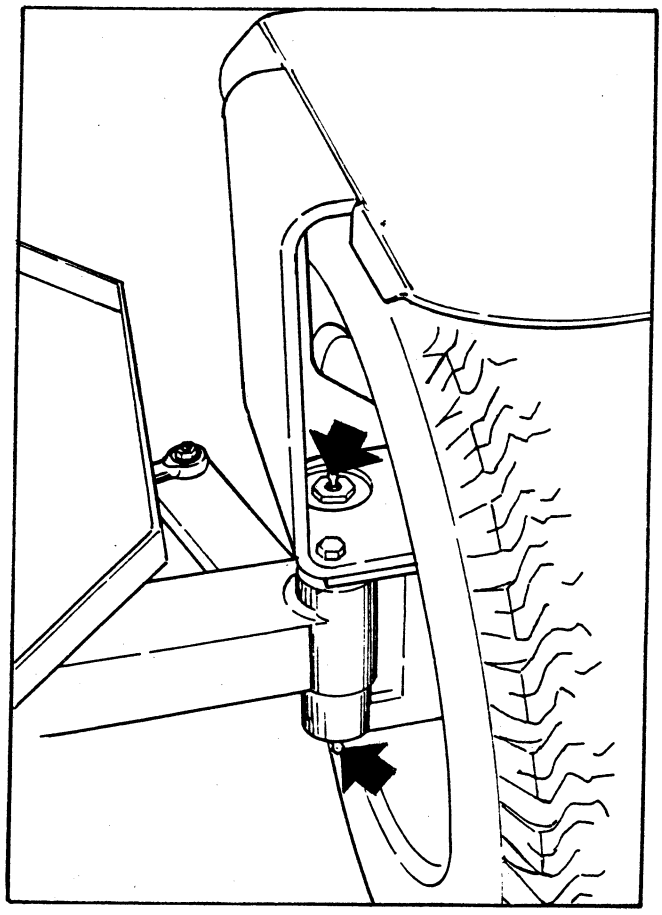

adjustments

CAUTION! Disengage all power, shut off the engine and be sure all moving parts have stopped BEFORE servicing, lubricating or unclogging this machine.

IMPORTANT!

SEE THE FORD ENGINE MANUAL FOR DETAILED INSTRUCTIONS REGARDING ANY NECESSARY ENGINE ADJUSTMENTS.

TOW VALVE:

When towing or otherwise attempting to move the MULTI-PRO without engine power, it is necessary to engage the Tow Valve on top of the Piston Pump. Failure to do so will result in damage to the hydrostatic Piston Motor.

To engage the Tow Valve, turn the Valve so that the "flats" are at 90° to the normal operating position shown in FIG. 8.

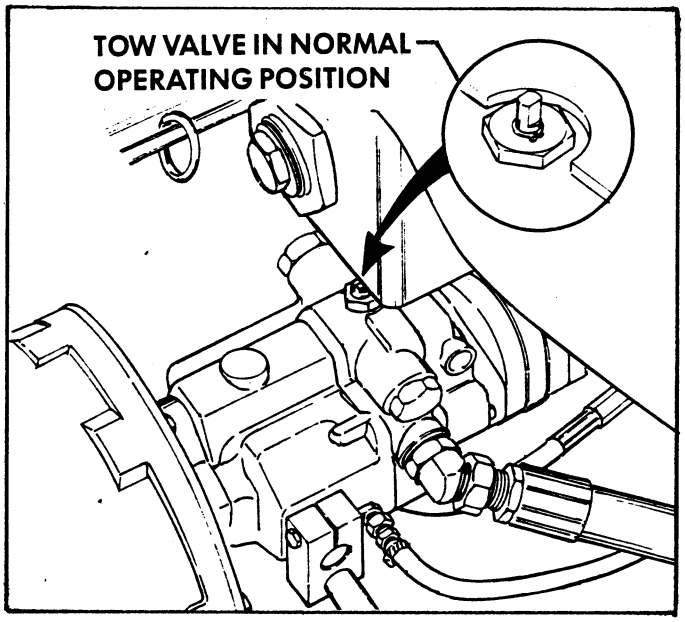

FIG. 8

DRIVE BELTS:

Any belt that has operated for a minimum of 10 minutes is considered a used belt, and when adjusted, it must be adjusted to the reset tension shown in the specifications, shown in the Ford Engine Manual.

DO NOT pry against the armatures steel contersection (stator), the rear housing, or the through bolts when adjusting drive belt tension. Always place the pry bar against the front housing.

VEHICLE DRIVE CONTROL:

CAUTION! These adjustments are very important! They are critical for the safety of the operator and the performance of the Vehicle.

If the Vehicle Drive Control Lever does not remain firmly in the selected drive speed or direction, it can be adjusted by tightening the jam nuts against the compression spring on the end of the Direction Shaft. See FIG. 9. DO NOT OVERTIGHTEN!

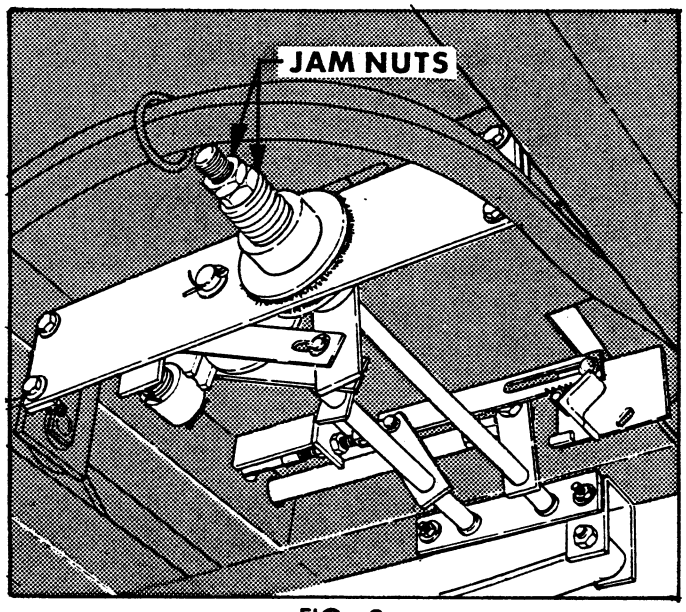

FIG. 9

VEHICLE DRIVE CONTROL (cont'd).

CAUTION: This adjustment is very important! It is critical for the safety of the operator and the performance of the Vehicle.

If the Vehicle Drive Control Lever does not return to "NEUTRAL" when the Brake Pedal is depressed, adjust as follows:

- Have the Vehicle on a hard level surface and the engine shut off.
- Depress and lock the Brake Pedal.
- Check for any damage to the Roller or Linkage Arms (see FIG. 10). If there is no damage, check to be sure that the Roller is making contact with the round portion of the Cam, if it is not...
- Tighten the jam nuts on the Cam Follower (a quarter- turn at a time) until the Linkage Arms are "snug", but not so tight as to cause the Cam to exert excessive pressure on the Roller. See FIG. 10.
- Check the position of the Vehicle Control Lever in the NEUTRAL "gate" in the Console dash panel. It should be centered as shown in FIG. 11, if it is not...
- Loosen the two hex nuts holding the Vehicle Control Lever to the arm from the Direction Shaft, reposition the Lever in the "gate" and retighten the hex nuts.
- Raise the rear wheels clear of the ground surface, start the engine and release the Brake Pedal. CAUTION: Have the front wheels blocked to prevent the Vehicle from rolling.
- Loosen the hex nut and turn the Coupling Nut clockwise or counter-clockwise, to shorten or lengthen the Directional Rod until the rear wheels stop turning. See FIG. 12.
- Re-tighten the hex nut securely after the adjustment is achieved.

To test the adjustment:

- Start the engine and place the Vehicle Control Lever in FORWARD.
- Engage the Brake Pedal and observe to be sure that the Control Lever automatically returns to NEUTRAL.
- Release the Brake Pedal and make sure the rear wheels have stopped turning.

Repeat this test procedure with the Control Lever in REVERSE.

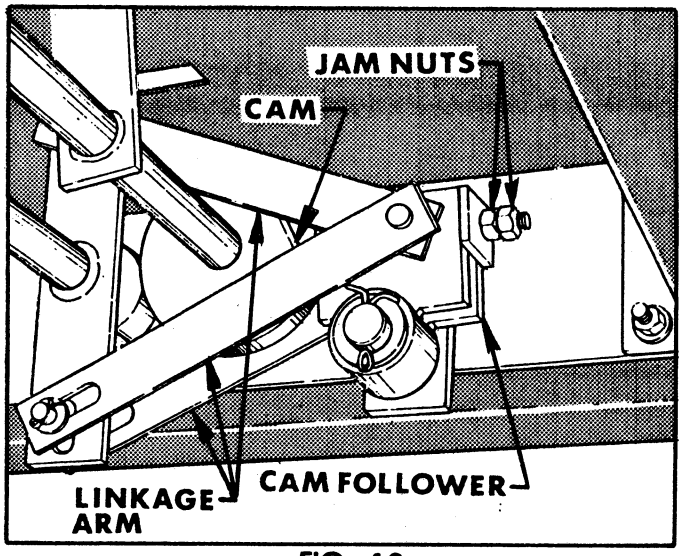

FIG. 10

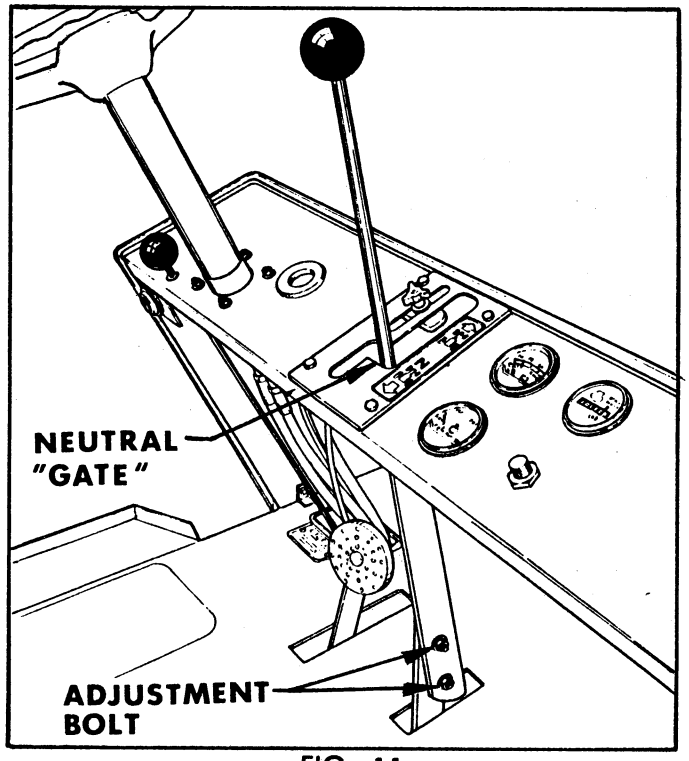

FIG. 11

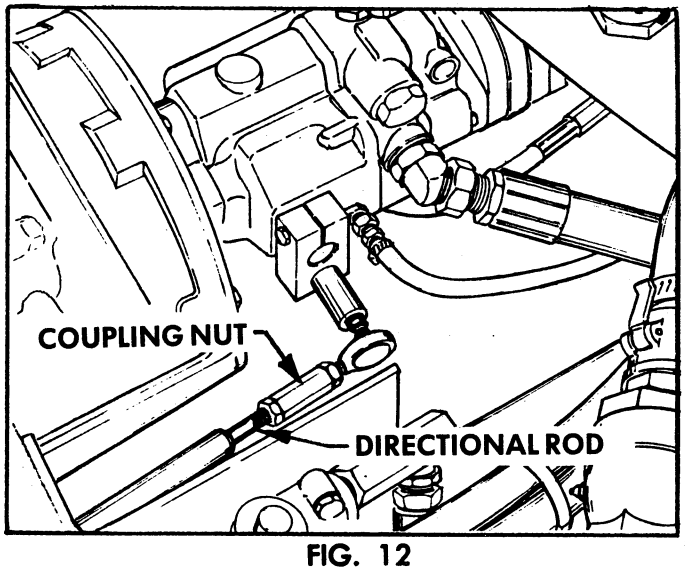

FIG. 12

BRAKE ADJUSTMENT:

This Vehicle is equipped with a self-adjusting disc brake. As the Brake Pads begin to wear and affect the Brake Pedal "travel", adjustments can be made before it becomes necessary to replace the Brake Pads. Adjust first, by tightening the jam nuts at the Compression Spring. Further adjustment can be made at the Brake Cable Bracket, if necessary. See FIG. **13**.

IMPORTANT: The Brake Pedal is to be used as a parking brake and as an emergency brake in situations demanding an immediate stop. Do not use the Brake Pedal for making routine stops. Use the Vehicle Drive Control Lever for normal operating stops. The Brake Pedal must be depressed and locked everytime the Vehicle is parked. Operating the MULTI-PRO in this manner will prolong the life of the Brake Pads and minimize the service requirements.

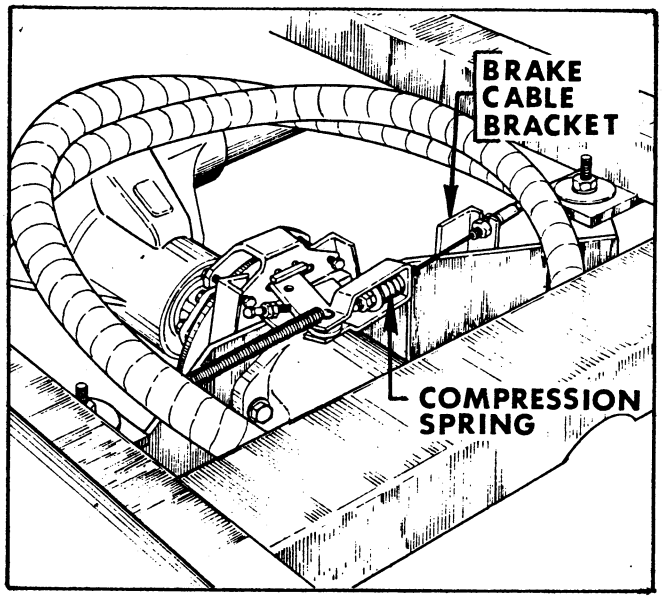

FIG. 13

The Brake Pedal is adjusted at the factory so that it engages at the same time the Vehicle Drive Control Lever returns to the NEUTRAL "gate". For the safety of the operator and the performance of the Vehicle, it is necessary to maintain this correlation.

To test this function:

- Place the Vehicle Drive Control Lever in FORWARD.
- Engage the Brake Pedal and observe to be sure that the Control Lever returns to the NEUTRAL "gate". Signal to a helper, who is to...
- Check to be sure that the disc brake is starting to engage at that moment.

wiring diagram

IGNITION SYSTEM:

The ignition system used on the MULTI-PRO's Ford engine is a "Distributorless Ignition System", as described in the Ford Engine Manual.

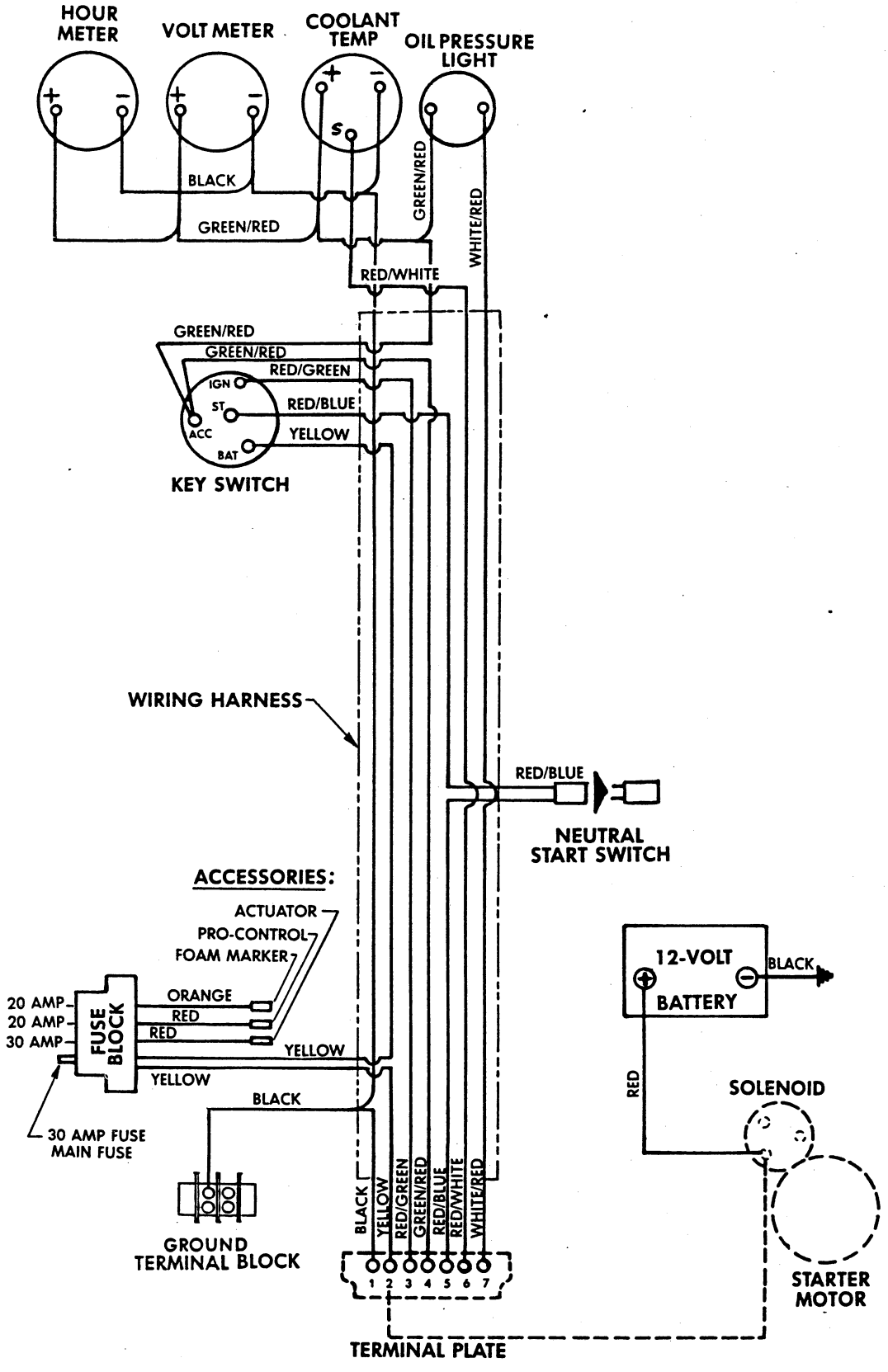

storage

Check the machine thoroughly for any replacement parts required. In the event parts are needed, place your order with your dealer in the fall or winter to avoid the delays caused by the usual spring rush. When ordering parts please specify the MODEL NUMBER and the SERIAL NUMBER of the MULTI-PRO (not the engine).

ENGINE:

IMPORTANT!

SEE THE FORD ENGINE MANUAL FOR DETAILED INSTRUCTIONS REGARDING ENGINE STORAGE.

⚠ CAUTION! NEVER STORE A MACHINE WITH GASOLINE IN THE TANK OR INSIDE A BUILDING WHERE FUMES MAY REACH AN OPEN FLAME OR SPARK. ALLOW THE ENGINE TO COOL BEFORE STORING IN ANY ENCLOSURE.

VEHICLE

Check all visible moving parts for damage or wear.

Check oil level in the differential.

Remove the battery, clean terminals and coat lightly with grease. Check liquid level and add distilled water if necessary. Bring battery to full charge. Store in a cool, dry area where battery will not freeze. Do not allow battery to sit directly on floor.

index

"ADJUSTMENTS" SECTION 16-18
- Brakes 18
- Tow Valve 16
- Vehicle Drive Control ..... 16 & 17

"MAINTENANCE & LUBRICATION" SECTION 12-15
- Air Cleaner 13
- Crankcase Oil 13
- Differential 15
- Fuel 12
- Hydraulic Filter 14
- Hydraulic Fluid 14
- Maintenance Schedule 12
- Oil Cooler 14
- Radiator 14
- Tires 15

"PRE-USE SERVICE" 9
- Battery 9

"SAFETY" SECTION 1-8

"STORAGE" 20

"VEHICLE GAUGES & CONTROLS" 10
- Brake Lock Knob 10
- Coolant Temperature Gauge 10
- Engine Warning Light 10
- Hour Meter 10
- Parking/Emergency Brake 10
- Speed Pre-Set Knob 10
- Vehicle Drive Control 10
- Voltmeter 10

"VEHICLE OPERATION" 11
- Initial Start-Up 11
- Starting the Engine 11
- Stopping the Engine 11

"WIRING DIAGRAM" 19

The Toro Promise

A ONE YEAR LIMITED WARRANTY

The Toro Company promises to repair your TORO Product if defective in materials or workmanship. The following time periods from the date of purchase apply:

Commercial Products . . . . . 1 Year

The costs of parts and labor are included, but the customer pays the transportation costs on walk rotary mowers with cutting unit widths of less than 25".

If you feel your TORO product is defective and wish to rely on The Toro Promise, the following procedure is recommended:

1. Contact your Authorized TORO Distributor or Commercial Dealer (the Yellow Pages of your telephone directory is a good reference source).
2. The TORO Distributor or Commercial Dealer will advise you on the arrangements that can be made to inspect and repair your product.
3. The TORO Distributor or Commercial Dealer will inspect the product and advise you whether the product is defective and, if so, make all repairs necessary to correct the defect without an extra charge to you.

If for any reason you are dissatisfied with the distributor's analysis of the defect or the service performed, you may contact us.

Write:

TORO Commercial Products Service Department
8111 Lyndale Avenue South
Minneapolis, Minnesota 55420

The above remedy of product defects through repair by an Authorized TORO Distributor or Commercial Dealer is the purchaser's sole remedy for any defect.

THERE IS NO OTHER EXPRESS WARRANTY. ALL IMPLIED WARRANTIES OF MERCHANTABILITY AND FITNESS FOR USE ARE LIMITED TO THE DURATION OF THE EXPRESS WARRANTY.

Some states do not allow limitations on how long an implied warranty lasts, so the above limitation may not apply to you.

This Warranty applies only to parts or components which are defective and does not cover repairs necessary due to normal wear, misuse, accidents, or lack of proper maintenance. Regular, routine maintenance of the unit to keep it in proper condition is the responsibility of the owner.

All warranty repairs reimbursable under the Toro Promise must be performed by an Authorized TORO Commercial Dealer or Distributor using Toro approved replacement parts.

Repairs or attempted repairs by anyone other than an Authorized TORO Distributor or Commercial Dealer are not reimbursable under the Toro Promise. In addition, these unauthorized repair attempts may result in additional malfunctions, the correction of which is not covered by warranty.

THE TORO COMPANY IS NOT LIABLE FOR INDIRECT, INCIDENTAL OR CONSEQUENTIAL DAMAGES IN CONNECTION WITH THE USE OF THE PRODUCT INCLUDING ANY COST OR EXPENSE OF PROVIDING SUBSTITUTE EQUIPMENT OR SERVICE DURING PERIODS OF MALFUNCTION OR NON-USE.

Some states do not allow the exclusion or limitation of incidental or consequential damages, so the above limitation or exclusion may not apply to you.

This warranty gives you specific legal rights, and you may also have other rights which vary from state to state.

COUNTRIES OTHER THAN THE UNITED STATES OR CANADA

Customers who have purchased TORO products exported from the United States or Canada should contact their TORO Distributor (Dealer) to obtain guarantee policies for your country, province or state. If for any reason you are dissatisfied with your Distributor's service or have difficulty obtaining guarantee information, contact the TORO importer. If all other remedies fail, you may contact us at The Toro Company.

Compliance with Radio Interference Regulations Certified.
Certifie Conforme au Reglement sur le Brouillage Radioelectrique.

Litho in U.S.A.