FORM NO. 42914

TORO®

MODEL NO. 41560-20101 & UP

OPERATOR'S INSTRUCTIONS

CARGO BED

FOR USE ON THE MULTI-PRO 5200 VEHICLE

Keep this Operators Manual, the Vehicle Operators Manual, the Engine Manual and all other Accessory Manuals in the plastic tube behind the operator seat.

It is very important that all persons operating this equipment have easy access to these instructions and safety information at all times!

The installation of accessories on the TORO Vehicle other than those designed and sold for that express purpose by TORO, may adversely affect the performance and safety characteristics of the Vehicle.

RECOGNIZE SAFETY INFORMATION



This safety-alert symbol is used to call attention to a dangerous situation, which could result in serious injury or death to the operator, a passenger or a bystander.

Follow recommended precautions and safe operating practices.

It is important to always replace any lost or damaged safety-alert and informational decals on the vehicle and accessories immediately.

FOLLOW SAFETY INSTRUCTIONS

This Manual is provided as a guide for the safe operation and proper maintenance of this equipment. However, the operator's personal safety, as well as those persons in the work area, will depend on the careful actions and good judgement of the operator

Carefully read the Vehicle's Operators Manual BEFORE attempting to operate the Vehicle and/or any of the Accessories.

Learn how to operate the machine and how to use controls properly. Do not let anyone operate without instruction.

INSTALLING AND USING ATTACHMENTS:

Always read the operating instructions that are included with the accessories BEFORE actually operating the unit. Carefully read and follow any "set-up" instructions that are given.

The addition of accessories, with their added weight and bulk will make the vehicle somewhat less stable. When turning or driving on slopes, always SLOW the vehicle before making a turn, and then SLOWLY turn the vehicle to prevent loss of control and possibly upset the vehicle.

DO NOT OVERLOAD THE VEHICLE. Maximum load limits are shown on decals used on all accessories . . . do not exceed these limits.

Failure to position loads carefully can result in their shifting or tipping over suddenly, causing the vehicle to upset.

Distribute loads evenly, keeping them low so as to prevent the vehicle from becoming top-heavy. When loading the cargo bed, have heavy loads to the front of the rear axle. Heavy loads in back of the rear axle can raise the front wheels clear of the ground, causing a loss of steering control and making the vehicle unstable.

DRIVE SAFELY

Always SLOW the vehicle when approaching, and while making, a turn.

Always SLOW the vehicle when driving in unfamiliar areas or over rough terrain.

Always SLOW the vehicle when changing the direction of travel or preparing to stop.

DO NOT make sudden or sharp turns or change direction of travel, on an incline, ramp, grade, slope or similar surface.

Adjust the vehicle speed to allow for existing conditions such as wet, slick surfaces, low visibility, etc.

Drive the vehicle UP and DOWN the face of the slopes, inclines or grades whenever possible. DO NOT drive ACROSS the face if at all possible. There is a risk of upsetting the vehicle, which can result in serious injury or death.

Be especially careful when driving a heavily loaded vehicle down an incline or slope. SLOW the vehicle!

©The Toro Company-1992

CARGO BED

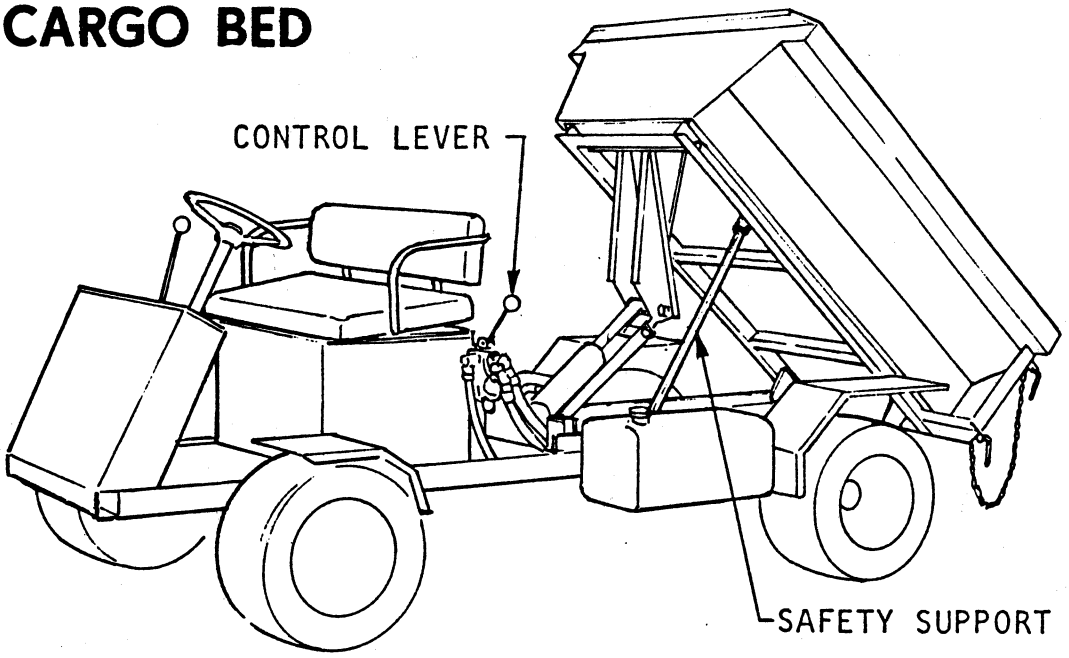

CAUTION

- NEVER EXCEED THE MAXIMUM LOAD OF 3500 LBS.
- WHEN WORKING INSIDE THE BED (OR AROUND THE VEHICLE) WITH THE CARGO BED RAISED, THE SAFETY SUPPORT MUST BE USED TO PREVENT THE ACCIDENTAL LOWERING OF THE BED. DO NOT USE THE SAFETY SUPPORT TO BLOCK A LOADED BED IN THE RAISED POSITION.
- LOWER THE CARGO BED ANYTIME THE BED IS LEFT UNATTENDED.
- HAVE THE VEHICLE POSITIONED ON A FIRM GROUND BASE AND BALANCED TO PREVENT TIPPING, BEFORE DUMPING THE CARGO.

BEFORE OPERATION:

- Check the hydraulic fluid level daily and maintain the level at approximately 2-inches from the top of the reservoir. Replenish as required with 10W40 Motor Oil.
- Always use extreme caution when filling or checking the hydraulic oil, in order to keep the system free of any contaminants.
- The MULTI-PRO Vehicle is equipped with a "throw-away" type cartridge. CHANGE THE CARTRIDGE AFTER THE FIRST 5 HOURS OF VEHICLE OPERATION AND EVERY 50 HOURS THEREAFTER.

operation

CONTROL LEVER: Pull the Lever UP to RAISE the Cargo Bed. Push the Lever DOWN to LOWER the Cargo Bed.

maintenance

IMPORTANT!
Keeping the hydraulic system clean is essential. Servicing the Hydraulic Filter is CRITICAL to the life of the hydraulic system!

AFTER EVERY 50 HOURS: Use a good grade of general purpose grease to lubricate all pivot points.