Form No. 3450-421 Rev C

TORO®

Count on it.

Parts Catalog

26in 8-Blade Cutting Unit

Greensmaster® 1026 Mower

Model No. 04842—Serial No. 410300000 and Up

Register at www.Toro.com.
Original Instructions (EN)

CE

3450-421 C

Ordering Replacement Parts

To order replacement parts, please supply the part number, the quantity, and the description of each part desired.

Understanding Reference Numbers

Each identified part in an illustration has a reference number. The reference number for a part also appears in the parts list, along with other information about the part.

This catalog uses two special reference number formats, one to indicate parts in a service assembly and another to indicate the quantity of a given part in an illustration.

Service Assembly Reference Numbers

Parts in service assemblies have reference numbers in the form a:b. The a represents the reference number of the entire service assembly and the b represents a sequential number unique to each part within the service assembly.

For example, a wheel assembly might be identified by reference number 6, the tire by 6:1, the valve by 6:2, and the wheel by 6:3. When you order the assembly identified by reference number 6, you receive all parts identified by reference numbers 6:1,6:2, and 6:3. However, you may also order any part individually. Reference numbers of this type appear in illustration and in parts lists.

Reference Numbers Indicating Quantity

In an illustration, if a reference number indicates more than one part, the reference number has the form nX y. The n represents the quantity of the part, the X is the multiplication symbol, and the y represents the reference number.

For example, in an illustration, the reference number 2X 37 means that two of the parts identified by reference number 37 are indicated.

Contents

Side Plate and Grass Shield Assembly 4
Reel and Bedknife Assembly 5
Reel Drive Box and Weight Assembly 6
Reel Drive Assembly No. 138-1611 7

© 2024—The Toro® Company
8111 Lyndale Avenue South
Bloomington, MN 55420

Contact us at www.Toro.com.
Printed in the USA.
All Rights Reserved

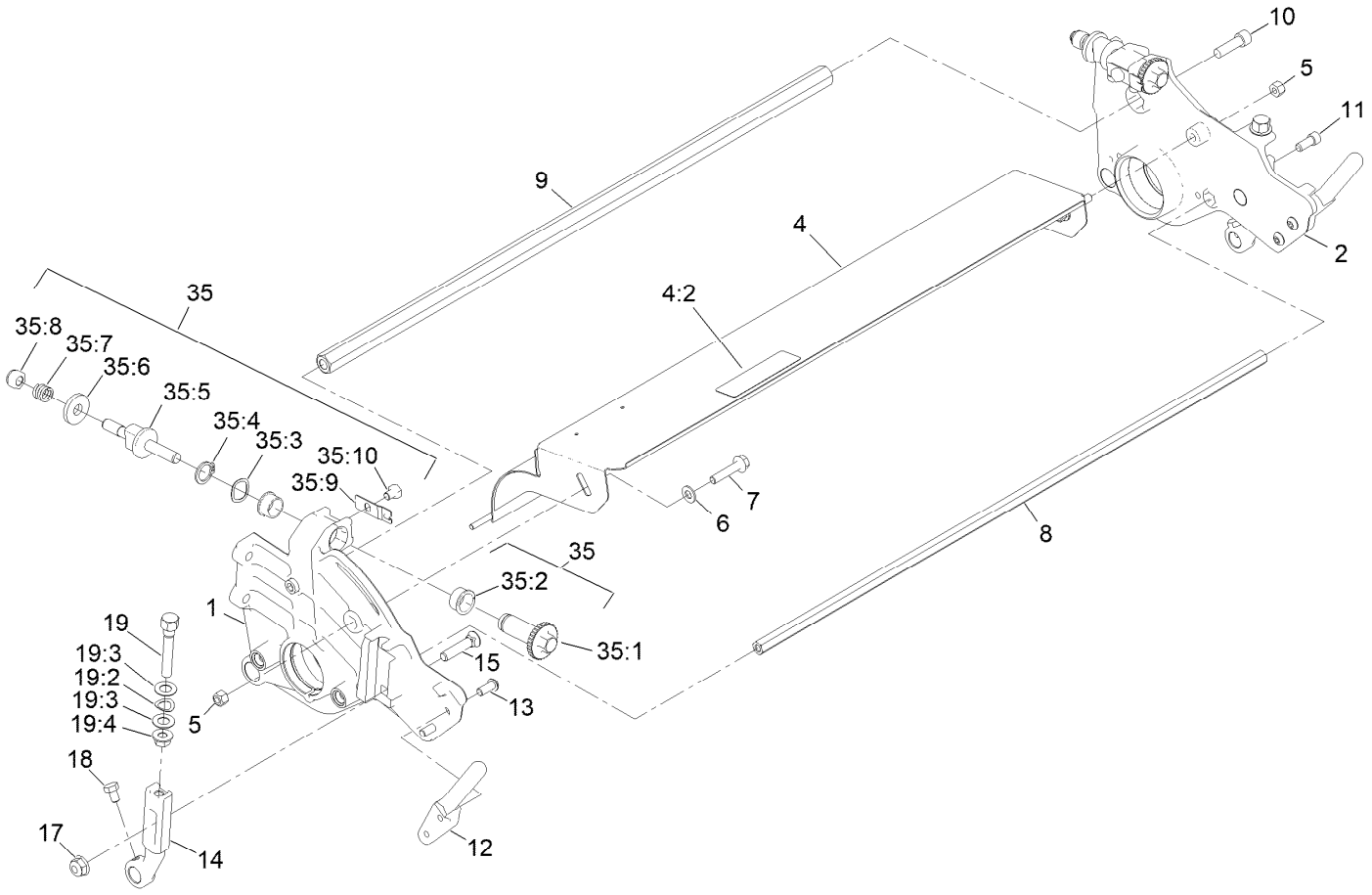

Side Plate and Grass Shield Assembly

Ref.	Part Number	Qty.	Description
1	138-5757	1	Plate-Side, RH
2	138-5759	1	Plate-Side, LH
4	139-4378	1	Grass Shield ASM
4:2	137-9706	1	Decal-Warning
5	3296-29	2	Nut-Lock, NI
6	3256-23	2	Washer-Plain
7	115-1794	2	Screw-HHF
8	138-1552	1	Rod-Frame
9	138-1551	1	Rod-Frame
10	3274-1	2	Screw-HSH
11	100-2401	2	Screw-HSH
12	65-8570	2	Rod-Mounting
13	3274-55	4	Screw-HSBH
14	137-0327	2	Arm-HOC
15	99-3773	2	Bolt-Plow
17	133-7570	2	Nut-Flange, NI

Ref.	Part Number	Qty.	Description
18	322-1	2	Screw-HH
19	138-1530	2	HOC Screw ASM
19:2	138-1642	1	Washer-Spring
19:3	138-1538	2	Washer-Special
19:4	127-6852	1	Nut-Flange, Lock
35	121-2637	1	DPA Rebuild Kit
35:1	106-5363	2	Shaft-Adjuster
35:2	106-5344	4	Bushing-Flange, Keyed
35:3	119-4164	2	Washer-Wave
35:4	32120-93	2	Ring-Retaining
35:5	137-6130	2	Screw-Adjuster, Bedbar
35:6	119-4155	2	Washer-Hardened
35:7	119-4156	2	Spring-Compression
35:8	119-4039	2	Nut-Hex
35:9	99-2097	2	Detent
35:10	119-4067	2	Screw-HH

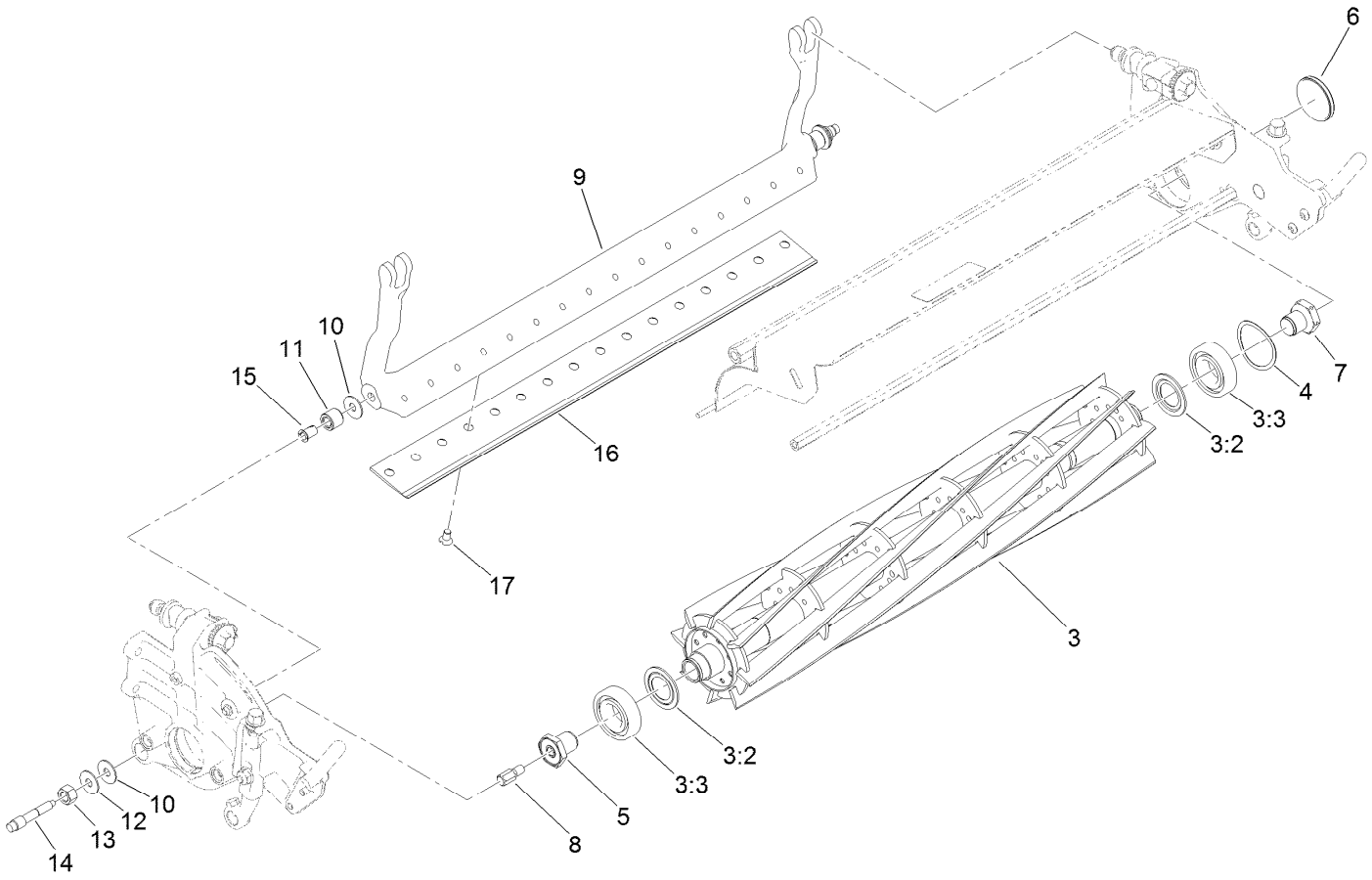

Reel and Bedknife Assembly

Ref.	Part Number	Qty.	Description
3	138-5753	1	8 Bld LD ES Reel+ ASM (26)
3:2	115-3299	2	Seal-Flocked
3:3	140-5510	2	Bearing-Sealed, Stainless
4	115-5258	1	Spring-Wire, Flat
5	133-9168	1	Nut-Drive, Reel
6	137-0325	1	Plug-Expansion
7	137-0326	1	Screw-Lock, Bearing
8	140-9256	1	Spline-Drive, 8 Tooth
9	138-1522-01	1	Bedbar
10	52-2900	4	Washer-Plastic
11	119-4153	2	Rubber Bushing ASM
12	119-4150	2	Washer-Flat
13	140-9234	2	Nut-Hex Lock
14	117-9493	2	Bolt-Bedbar

Ref.	Part Number	Qty.	Description
15	52-2890	2	Bushing-Nylon
16	104-2646	1	Bedknife-Highcut ●
16	107-8181	1	Bedknife-Fairway ●
16	112-9275	1	Bedknife-Microcut ●
16	117-1548	1	Bedknife-Edgemax Tournament
16	139-4322	1	Bedknife-Edgemax, Microcut Short ●
16	139-4323	1	Bedknife-Edgemax, Tournament Short ●
16	139-4324	1	Bedknife-Edgemax, 26" Microcut ●
16	93-9015	1	Bedknife-Lowcut ●
16	94-5885	1	Bedknife-Tournament ●
17	119-4151	16	Screw-Bedknife

● Optional Equipment

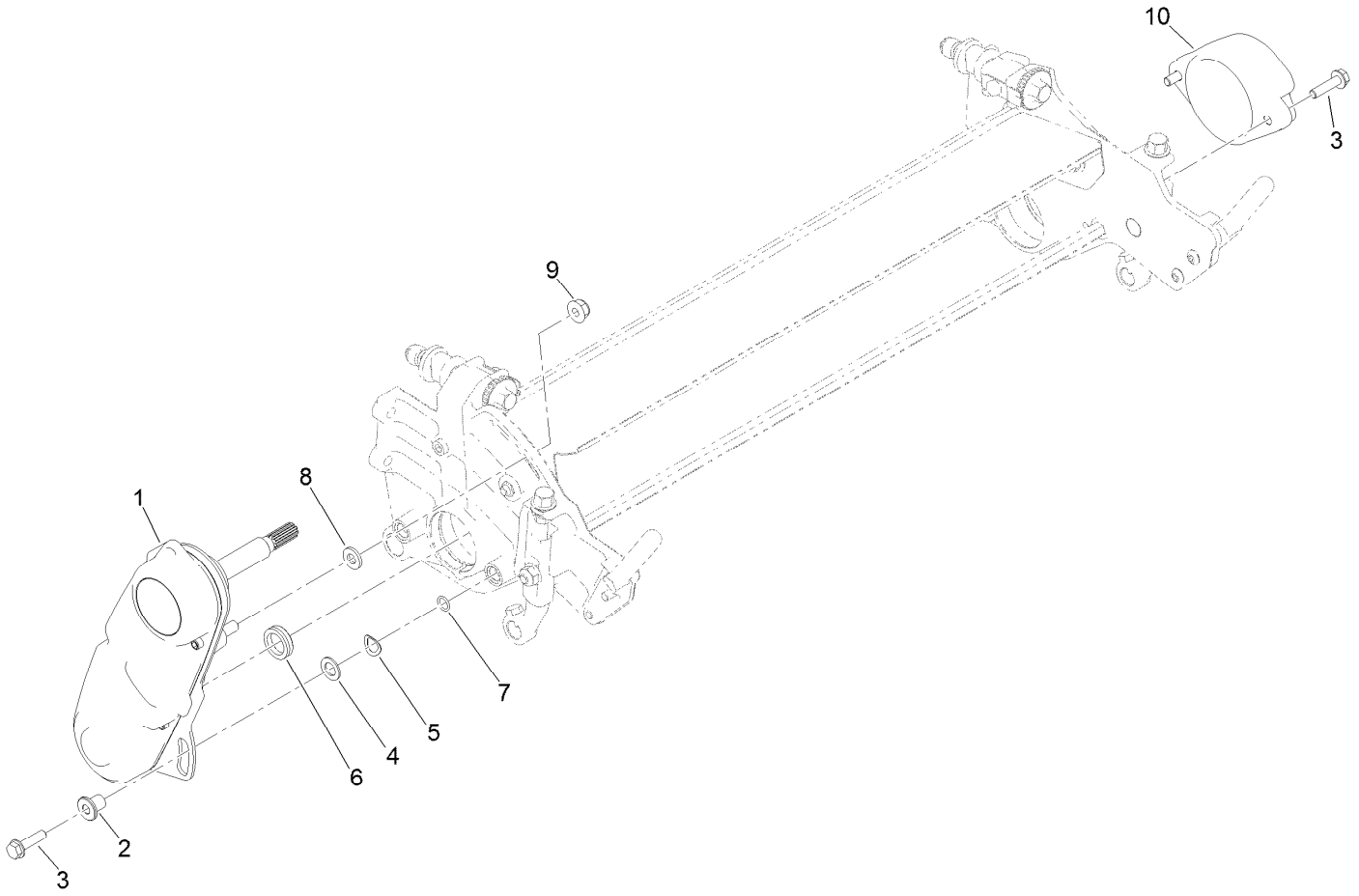

Reel Drive Box and Weight Assembly

Ref.	*Part Number*	*Qty.*	*Description*
1	138-1611	1	Reel Drive ASM
2	71-4411	2	Spacer
3	112-6913	4	Screw-HF
4	100-7336	2	Washer
5	138-1642	2	Washer-Spring
6	138-1549	1	Seal
7	360-0494	2	O-Ring
8	115-7293	1	Washer-Hardened
9	133-7570	1	Nut-Flange, NI
10	138-1633-03	1	Weight

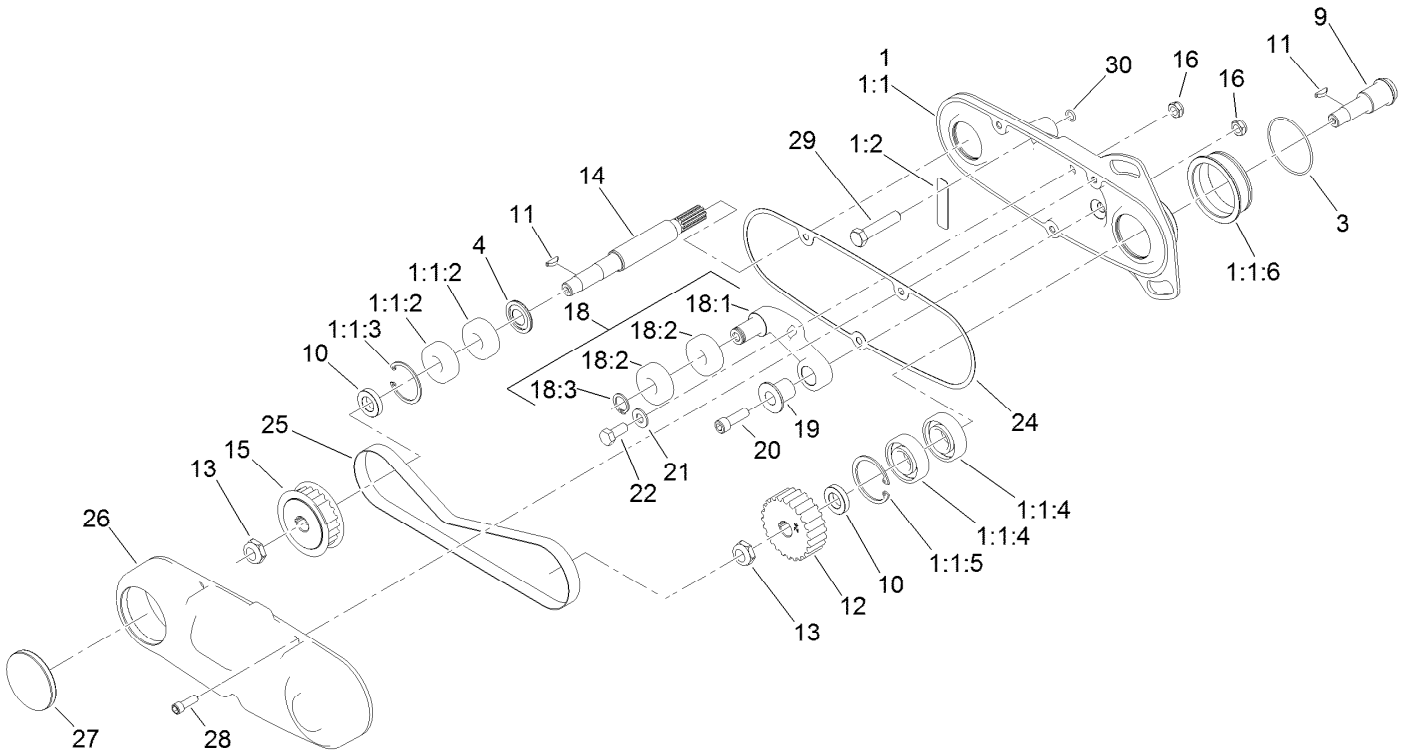

Reel Drive Assembly No. 138-1611

Ref.	Part Number	Qty.	Description
1	139-4300	1	Reel Drive Housing ASM
1:1		1	Housing ASM ●
1:1:2	115-6869	2	Bearing-Ball, Stainless
1:1:3	32151-34	1	Ring-Retaining
1:1:4	117-6831	2	Bearing-Ball, Stainless
1:1:5	107-3512	1	Ring-Snap, Internal
1:1:6	132-4588	1	Sleeve-Pivot
1:2	120-9570	1	Decal-Warning
3	360-0398	1	O-Ring
4	115-6923	1	Shield-Bearing, Flocked
9	133-9154	1	Shaft-Reel, Driven
10	133-9155	2	Spacer-Pulley, Reel
11	937218	2	Key-Hipro
12	121-4724	1	Pulley-Reel, 24 Tooth
13	3296-45	2	Nut-Hex
14	138-1614	1	Shaft-Drive, Reel
15	121-4722	1	Pulley-Reel, 22 Tooth

Ref.	Part Number	Qty.	Description
16	3296-47	2	Nut-Lock,NI
18		1	Idler ASM ●
18:1	133-9152	1	Idler Arm
18:2	115-6869	2	Bearing-Ball, Stainless
18:3	115-6755	1	Ring-Retaining
19	131-1847	1	Bushing-Idler
20	3274-22	1	Screw-HSH
21	3256-23	1	Washer-Plain
22	322-3	1	Screw-HH
24	132-4590	1	Gasket-Reel Drive
25	140-9348	1	Belt-Reel, 75T
26	133-9161	1	Cover-Drive, Reel
27	137-0325	1	Plug-Expansion
28	3274-8	3	Screw-HSH
29	323-9	1	Screw-HH
30	237-21	1	O-Ring

● Not serviced separately



Count on it.