Form No. 3420-921 Rev J

TORO®

Count on it.

Parts Catalog

Groundsmaster® 5900/5910

Rotary Mower

Model No. 31698—Serial No. 401420001 and Up

Model No. 31699—Serial No. 401420001 and Up

Register at www.Toro.com.
Original Instructions (EN)

CE

3420-921 J

Ordering Replacement Parts

To order replacement parts, please supply the part number, the quantity, and the description of each part desired.

Understanding Reference Numbers

Each identified part in an illustration has a reference number. The reference number for a part also appears in the parts list, along with other information about the part.

This catalog uses two special reference number formats, one to indicate parts in a service assembly and another to indicate the quantity of a given part in an illustration.

Service Assembly Reference Numbers

Parts in service assemblies have reference numbers in the form a:b. The a represents the reference number of the entire service assembly and the b represents a sequential number unique to each part within the service assembly.

For example, a wheel assembly might be identified by reference number 6, the tire by 6:1, the valve by 6:2, and the wheel by 6:3. When you order the assembly identified by reference number 6, you receive all parts identified by reference numbers 6:1,6:2, and 6:3. However, you may also order any part individually. Reference numbers of this type appear in illustration and in parts lists.

Reference Numbers Indicating Quantity

In an illustration, if a reference number indicates more than one part, the reference number has the form nX y. The n represents the quantity of the part, the X is the multiplication symbol, and the y represents the reference number.

For example, in an illustration, the reference number 2X 37 means that two of the parts identified by reference number 37 are indicated.

Contents

Frame Assembly . . . 6
Rear Axle Assembly . . . 8
Axle Assembly No. 114-5982-01 . . . 10
Tie Rod Assembly No. 110-6049-03 . . . 11
Engine and Mount Assembly . . . 12
Alternator Assembly . . . 13
Hydraulic Cooling Assembly . . . 14
Radiator and Cooling Fan Assembly . . . 16
Air Cleaner Assembly . . . 18
Fuel System Assembly . . . 19
Traction Hydraulic Assembly . . . 20
Piston Pump Assembly No. 130-9150 . . . 22
Hydraulic Gear Pump Assembly No. 130-2520 . . . 24
Traction Valve Assembly . . . 26
Hydraulic Traction Valve Manifold Assembly No. 132-1397 . . . 28
Hydraulic Traction Motors Assembly . . . 30
Hydraulic Motor Assembly No. 125-5391 . . . 32
Hydraulic Motor Assembly No. 125-5434 . . . 34
Hydraulic Traction Assembly . . . 36
Hydraulic Motor Assembly No. 132-1425 . . . 38
Hydraulic Tank Assembly . . . 40
Hydraulic Cutting Circuit Assembly . . . 42
Center Cutting Deck Drive Valve Assembly . . . 44
Hydraulic Manifold Assembly No. 132-1394 . . . 45
LH Cutting Deck Drive Valve Assembly . . . 46
Hydraulic Manifold Assembly No. 132-1395 . . . 47
RH Cutting Deck Drive Valve Assembly . . . 48
Hydraulic Manifold Assembly No. 132-1396 . . . 49
Hydraulic Motor Assembly No. 125-5392 . . . 50
Hydraulic Steering/Lift Circuit Assembly . . . 52
Steering/Lift Valve Assembly No. 130-2433 . . . 54
Hydraulic Steering/Lift Manifold Assembly No. 132-1398 . . . 56
Hydraulic Cylinder Assembly No. 114-4831 . . . 58
Hydraulic Cylinder Assembly No. 114-4830 . . . 59
Hydraulic Cylinder Assembly No. 114-5685 . . . 60
Manual Parking Brake Manifold Assembly No. 132-1378 . . . 61
Hydraulic Parking Brake Manifold Assembly No. 132-1399 . . . 62
Hydraulic Steering Assembly . . . 63
Steering Valve Assembly No. 130-7949 . . . 64
Hydraulic Cylinder Assembly No. 132-1308 . . . 65
Hydraulic Filter Manifold Assembly . . . 66
Side Panel and Bumper Assembly . . . 67
Hood Assembly . . . 68
Center Front Deck Connection Assembly . . . 70
Center Front and Winglet Deck Assembly . . . 72
Center Front Deck and Decal Assembly No. 130-9201 . . . 73
Right Front Deck and Decal Assembly No. 130-9218 . . . 74
Left Front Deck and Decal Assembly No. 130-9210 . . . 75
Center Deck Belt, Pulley and Spindle Assembly . . . 76
Driving Spindle Assembly No. 131-0768 . . . 78
High Spindle Assembly No. 117-9233 . . . 80
Double Spindle Assembly No. 117-9234 . . . 82
Center Deck Roller, Skid and Caster Wheel Assembly . . . 84
10 Inch Wheel Assembly No. 93-4240 . . . 85

© 2024—The Toro® Company

8111 Lyndale Avenue South
Bloomington, MN 55420

Contact us at www.Toro.com.
Printed in the USA.

All Rights Reserved

Contents (continued)

Center Front Deck Spindle and Blade Assembly . . . 86
Center Front Deck Belt Cover Assembly . . . 87
Center Front Deck Chamber and Discharge Assembly . . . 88
Center Front Deck Transport Damper Assembly . . . 89
Left Hand Deck Connection Assembly . . . 90
Left Hand Deck Belt, Pulley and Spindle Assembly . . . 92
Left Hand Deck Decal Assembly No. 130-9271 . . . 94
Left Hand Deck Skid and Caster Wheel Assembly . . . 95
Left Hand Deck Blade Assembly . . . 96
Left Hand Deck Belt Cover Assembly . . . 97
Left Hand Deck Chamber Assembly . . . 98
Left Hand Deck Stop Assembly . . . 99
Left Hand Deck Impact Arm and Limit Switch Assembly . . . 100
Left Hand Deck Transport Lock Assembly . . . 102
Right Hand Deck Connection Assembly . . . 104
Right Hand Deck Belt, Pulley and Spindle Assembly . . . 106
Right Hand Deck Decal Assembly No. 130-9241 . . . 108
Right Hand Deck Roller, Skid and Caster Wheel Assembly . . . 109
Right Hand Deck Blade Assembly . . . 110
Right Hand Deck Belt Cover Assembly . . . 111
Right Hand Deck Chamber Assembly . . . 112
Right Hand Deck Stop Assembly . . . 113
Right Hand Deck Impact Arm and Limit Switch Assembly . . . 114
Right Hand Deck Transport Lock Assembly . . . 116
Platform Assembly . . . 118
Seat Mount Assembly . . . 120
Seat Suspension Assembly No. 130-2702 . . . 121
Control Console Assembly . . . 122
Traction Pedal Assembly . . . 124
Steering Column Assembly . . . 125
Steering Column Assembly No. 132-1307 . . . 126
Front Electrical Component Assembly . . . 127
Mid Electrical Component Assembly . . . 128
Rear Electrical Component Assembly . . . 129
Battery Cable Routing Assembly . . . 130
Wire Harness Assembly . . . 132
Roll-Over Protection System Assembly For ROPS Model Only . . . 134
Right Hand Tail Light Assembly No. 108-8007 . . . 135
Left Hand Tail Light Assembly No. 108-8008 . . . 136
Vinyl Premium Seat Assembly No. 117-5676 . . . 137
Head Light Assembly No. 92-6565 . . . 138
Cab Mounting Assembly For Cab Model Only . . . 139
Cloth Premium Seat Assembly No. 117-9429 . . . 140
AC Compressor Mount and Cab Fluids Assembly For Cab Model Only . . . 141
Cab Frame, Mirror and Decal Assembly For Cab Model Only . . . 142
Windshield Wiper, Filter and Air Conditioning Assembly For Cab Model Only . . . 144
Air Conditioning Duct Assembly No. 132-3468 For Cab Model Only . . . 146
Window and Door Assembly For Cab Model Only . . . 148
Left Hand Door Assembly For Cab Model Only . . . 150
Right Hand Door Assembly For Cab Model Only . . . 152
Left Side Hose Assembly For Cab Model Only . . . 154
Pre-Filter Screen Assembly For Cab Model Only . . . 156
Right Side Hose Assembly For Cab Model Only . . . 158
Roof and Headliner Assembly For Cab Model Only . . . 160

Contents (continued)

Headliner Wire Harness and Control Assembly For Cab Model Only . . . 162
Mixing Box Mounting Bracket and Water Tray Assembly For Cab Model Only . . . 164
Blower Fan and Evaporator Core Assembly For Cab Model Only . . . 166
Heat / Air Conditioner Housing Assembly For Cab Model Only . . . 168
Air Diverter and Expansion Valve Assembly For Cab Model Only . . . 170
Air Diverter Assembly No. 121-8369 For Cab Model Only . . . 172
Cylinder Block Assembly . . . 174
Gear Housing Assembly . . . 175
Cylinder Head and Cover Assembly . . . 176
Flywheel Housing and Oil Sump Assembly . . . 178
Suction Manifold Assembly . . . 179
Exhaust Manifold Assembly . . . 180
Camshaft and Driving Gear Assembly . . . 181
Diesel Particulate Filter Assembly . . . 182
Turbine Assembly . . . 184
Crankshaft and Piston Assembly . . . 185
Lubrication and Oil System Assembly . . . 186
Lubrication Oil Pipe Assembly . . . 187
Cooling Water System Assembly . . . 188
Fuel Supply Pump Assembly . . . 189
Fuel Injection Valve Assembly . . . 190
Fuel Pipe Assembly . . . 191
Starter Motor Assembly . . . 192
Generator Assembly . . . 193
Electronic Control Unit Assembly . . . 194
Electric Parts Assembly . . . 195
Gasket Set . . . 196
Attachments and Accessories . . . 198

Frame Assembly

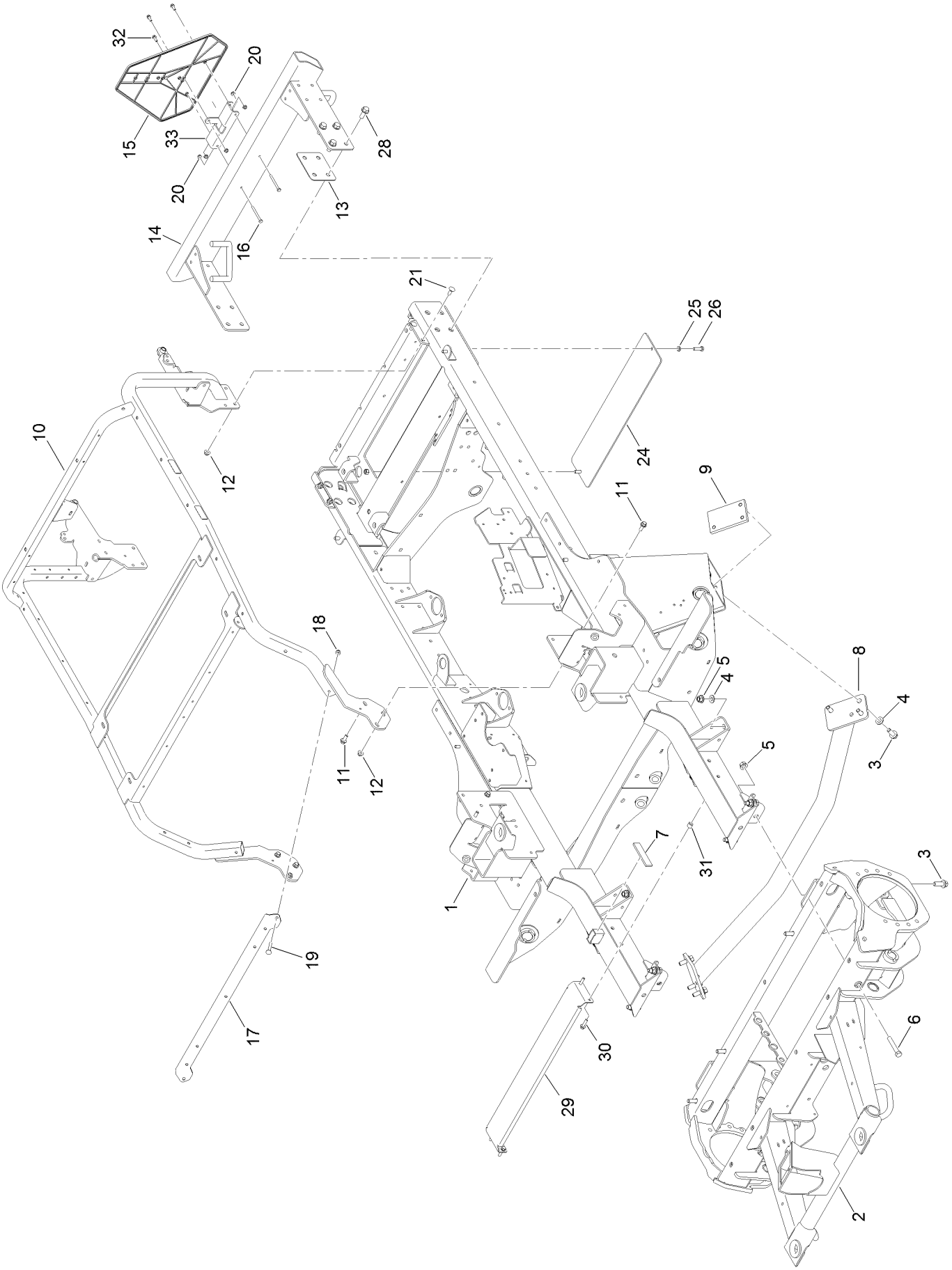

Frame Assembly (continued)

Ref.	Part Number	Qty.	Description
1	130-2450-01	1	Frame
2	125-5401-01	1	Frame-Front
3	100-6116	14	Screw-HHF
4	3256-26	14	Washer-Flat
5	99-5107	10	Nut-Lock
6	325-12	2	Screw-HH
7	115-5465	1	Seal-Trim
8	114-5969-01	1	Crossmember
9	114-5990	2	Plate-Tapped
10	132-1387	1	Cooler Mount ASM
11	3234-42	8	Screw-HHF
12	104-8301	6	Nut-HF, NI
13	115-5458-03	1	Shim-Bumper
14	131-2310-03	1	Bumper
15	92-7760	1	Emblem-Vehicle, Slow Moving
16	321-14	2	Screw-HH
17	130-2570-03	1	Bracket-Mount, Fuse
18	104-8300	2	Nut-HF, NI
19	3230-7	2	Bolt-CARR
20	104-7201	5	Nut-HF, NI
21	3231-2	4	Bolt-CARR
24	136-4429-01	1	Cover-Frame
25	3253-21	2	Washer-Lock
26	323-7	2	Screw-HH
28	3234-38	8	Screw-HHF
29	132-1401-01	1	Strap-Support, Tank
30	3234-36	4	Screw-HHF
31	107-3677	2	Spacer-Tube
32	115-5103	3	Screw-HHF
33	137-5535-03	1	Mount

Rear Axle Assembly

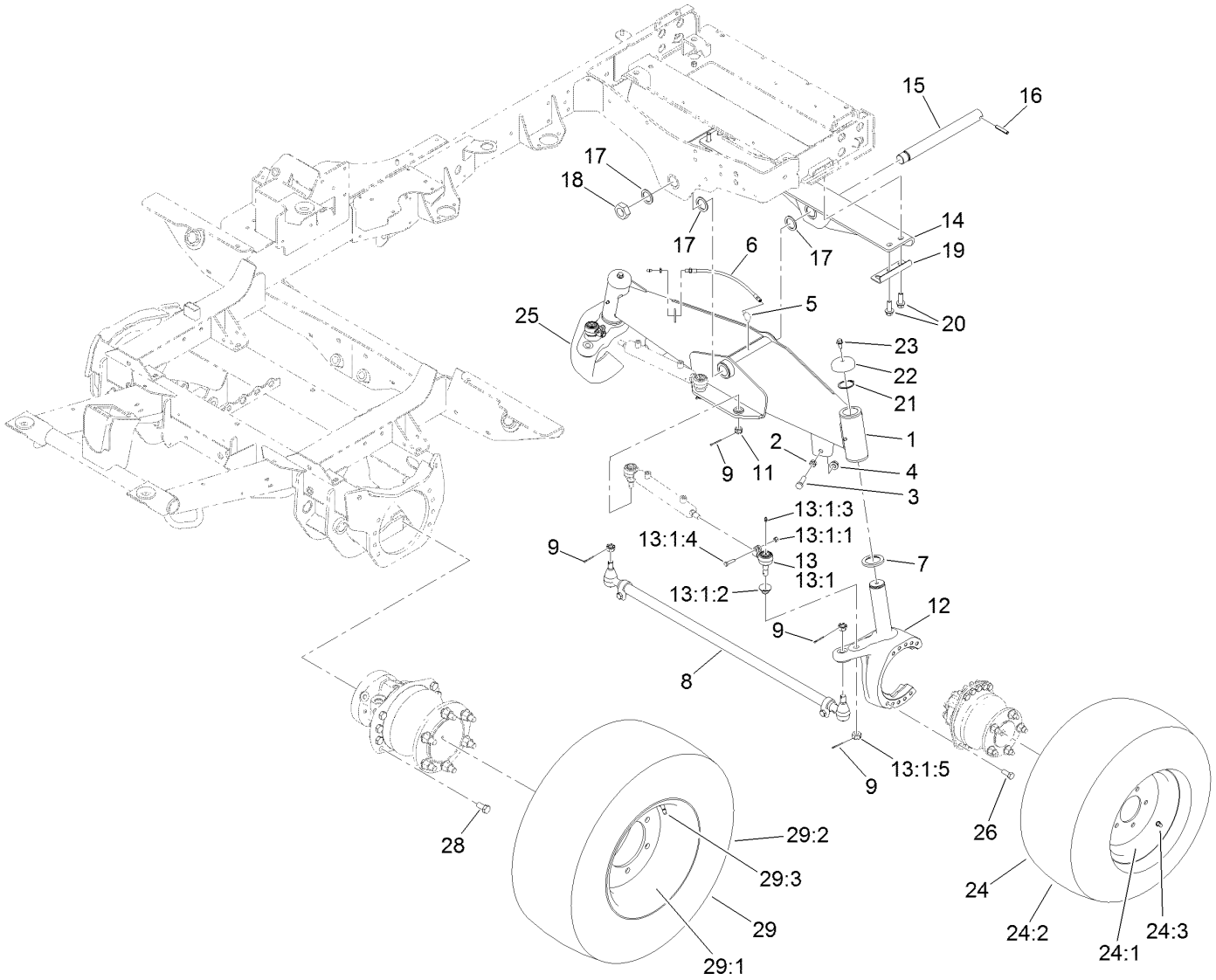

Rear Axle Assembly (continued)

Ref.	Part Number	Qty.	Description
1	114-5982-01	1	Axle ASM
2	3218-5	2	Nut-Jam
3	325-7	2	Screw-HH
4	99-5107	2	Nut-Lock
5	2811-7	1	Elbow
6	114-5586	1	Hose ASM (With Fitting)
7	100-2508	2	Washer-Thrust
8	110-6049-03	1	Tie Rod ASM
9	3272-12	6	Pin-Cotter
11	32136-13	2	Nut-SHH
12	130-9043-01	1	Spindle-Steer, LH
13	106-6895-03	2	Ball Joint ASM
13:1		1	Joint-Ball ●
13:1:1	32136-13	1	Nut-SHH
13:1:2	106-6896	1	Seal
13:1:3	302-5	1	Fitting-Grease
13:1:4	3210-7	1	Screw-HH
13:1:5	32152-5	1	Nut-Hex
14	110-6033-01	1	Support-Axle
15	114-5970	1	Shaft-Pivot
16	32121-110	1	Pin-Roll, Slotted
17	98-1452	3	Washer-Thrust
18	3296-68	1	Nut-Lock, NI
19	130-9033-01	2	Guard-Hose
20	100-6116	4	Screw-HHF
21	100-4196	2	Ring-Retaining
22	100-3362	2	Cap-Spindle
23	3234-12	2	Screw-HHF
24	127-3509	2	Wheel And Tire ASM
24:1	125-5379	1	Wheel
24:2	117-2901	1	Tire
24:3	5108	1	Valve
25	130-9041-01	1	Spindle-Steer, RH
26	325-5	20	Screw-HH
28	327-3	16	Screw-HH
29	131-2380	2	Wheel And Tire ASM
29:1	131-2381	1	Wheel
29:2	131-2382	1	Tire
29:3	232-24	1	Stem-Valve

● Not serviced separately

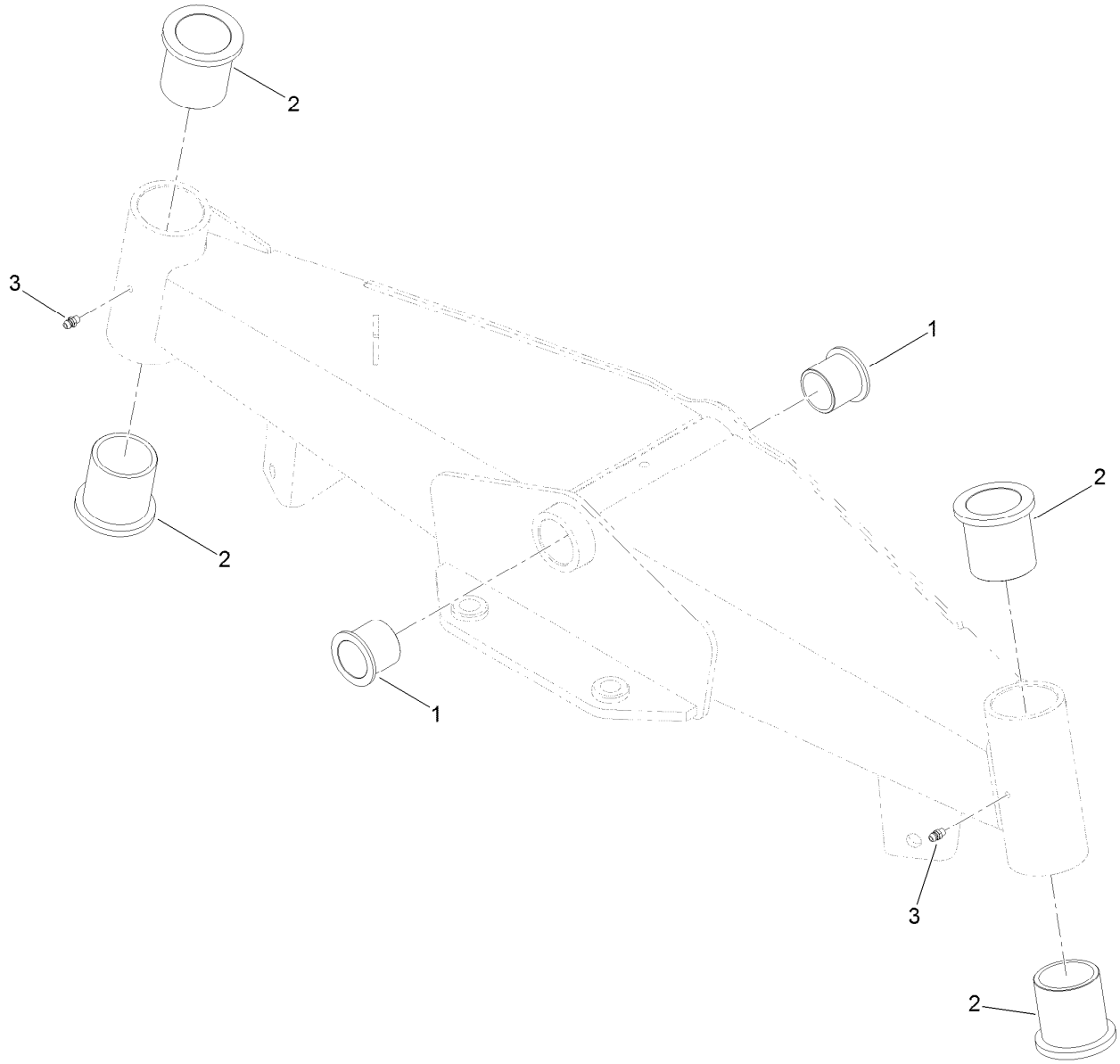

Axle Assembly No. 114-5982-01

Ref.	*Part Number*	*Qty.*	*Description*
1	69-6470	2	Bushing-Caster
2	100-2506	4	Bushing-Castor
3	302-5	2	Fitting-Grease

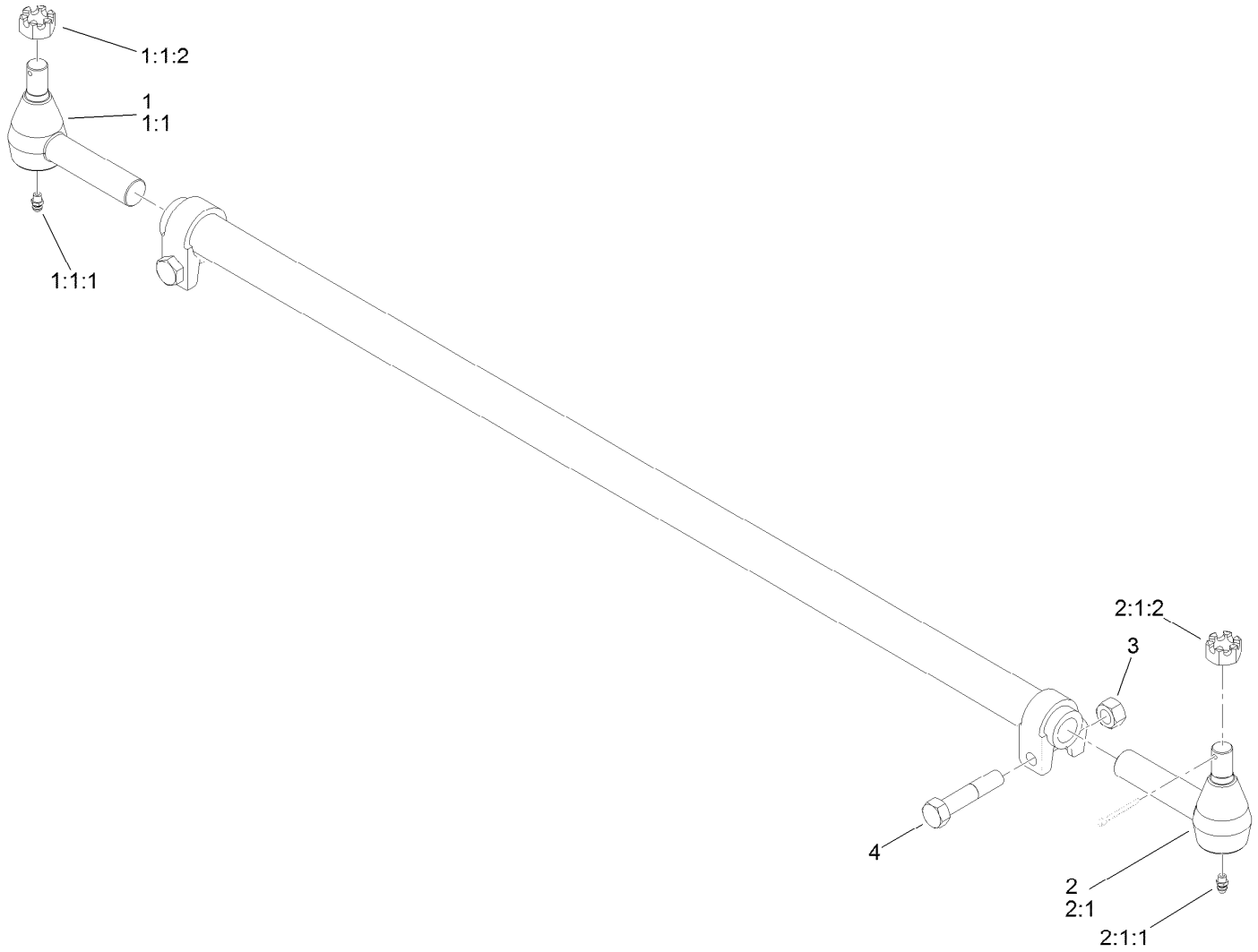

Tie Rod Assembly No. 110-6049-03

Ref.	*Part Number*	*Qty.*	*Description*
1	110-6141-03	1	RH Tie Rod End ASM
1:1		1	Rod End-Tie, RH ●
1:1:1	302-5	1	Fitting-Grease
1:1:2	32136-2	1	Nut-SHH
2	110-6142-03	1	LH Tie Rod End ASM
2:1		1	Rod End-Tie, LH ●
2:1:1	302-5	1	Fitting-Grease
2:1:2	32136-2	1	Nut-SHH
3	44-2200	1	Screw-Blade
4	32153-7	1	Nut-Lock

● Not serviced separately

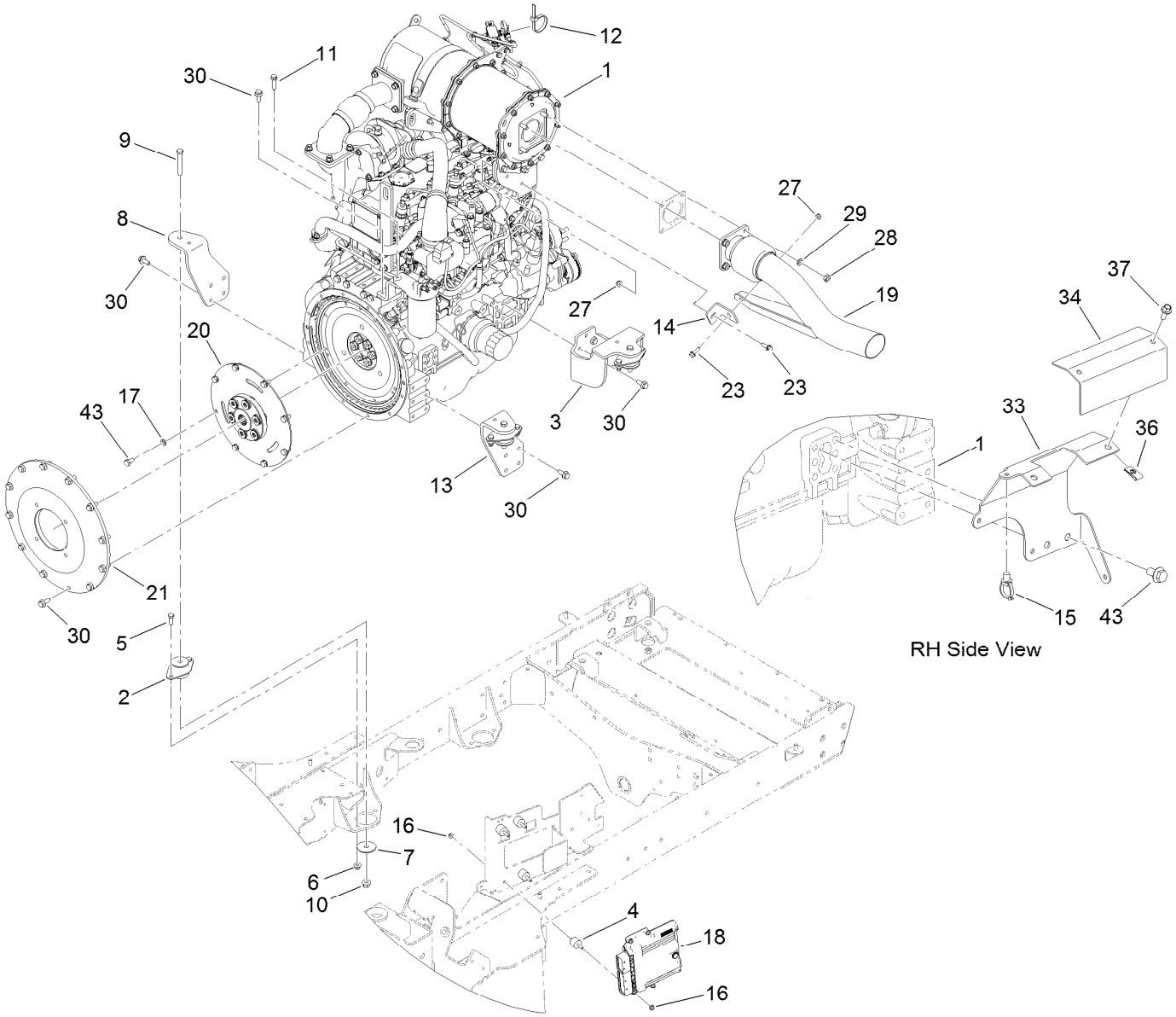

Engine and Mount Assembly

Ref.	Part Number	Qty.	Description
1	130-2500	1	Engine-Yanmar
2	136-4885	4	Mount-Engine
3	130-2409-03	2	Mount-Motor, Rear
4	132-1356	4	Mount-Isolator
5	323-6	8	Screw-HH
6	104-8301	8	Nut-HF, NI
7	87-5100	4	Washer-Snubbing
8	130-2415-03	1	Mount-Motor, RH Front
9	324-12	4	Screw-HH
10	114-8417	4	Nut-HF, NI
11	33104-030	2	Screw-HHF
12	3290-378	1	Tie-Cable
13	130-2414-03	1	Mount-Motor, LH Front
14	130-2424	1	Bracket-Exhaust
15	32180-030	1	Clip-Tie
16	104-7201	8	Nut-HF, NI

Ref.	Part Number	Qty.	Description
17	107-1413	8	Washer-Hardened
18	121-5592	1	Electronic Control Unit
19	132-1628	1	Pipe-Exhaust
20	130-2585	1	Coupler-Flywheel
21	130-9095	1	Cover-Flywheel
23	3234-29	2	Screw-HHF
27	104-8300	2	Nut-HF, NI
28	33015-00	4	Nut-Hex
29	33095-00	4	Washer-Flat
30	33105-025	30	Screw-HHF
33	137-5505-03	1	Mount-Shield
34	137-5506-03	1	Shield-Starter
36	3290-199	2	Nut-Speed
37	126-1592	2	Screw-HHF
43	33115-020	8	Screw-HH

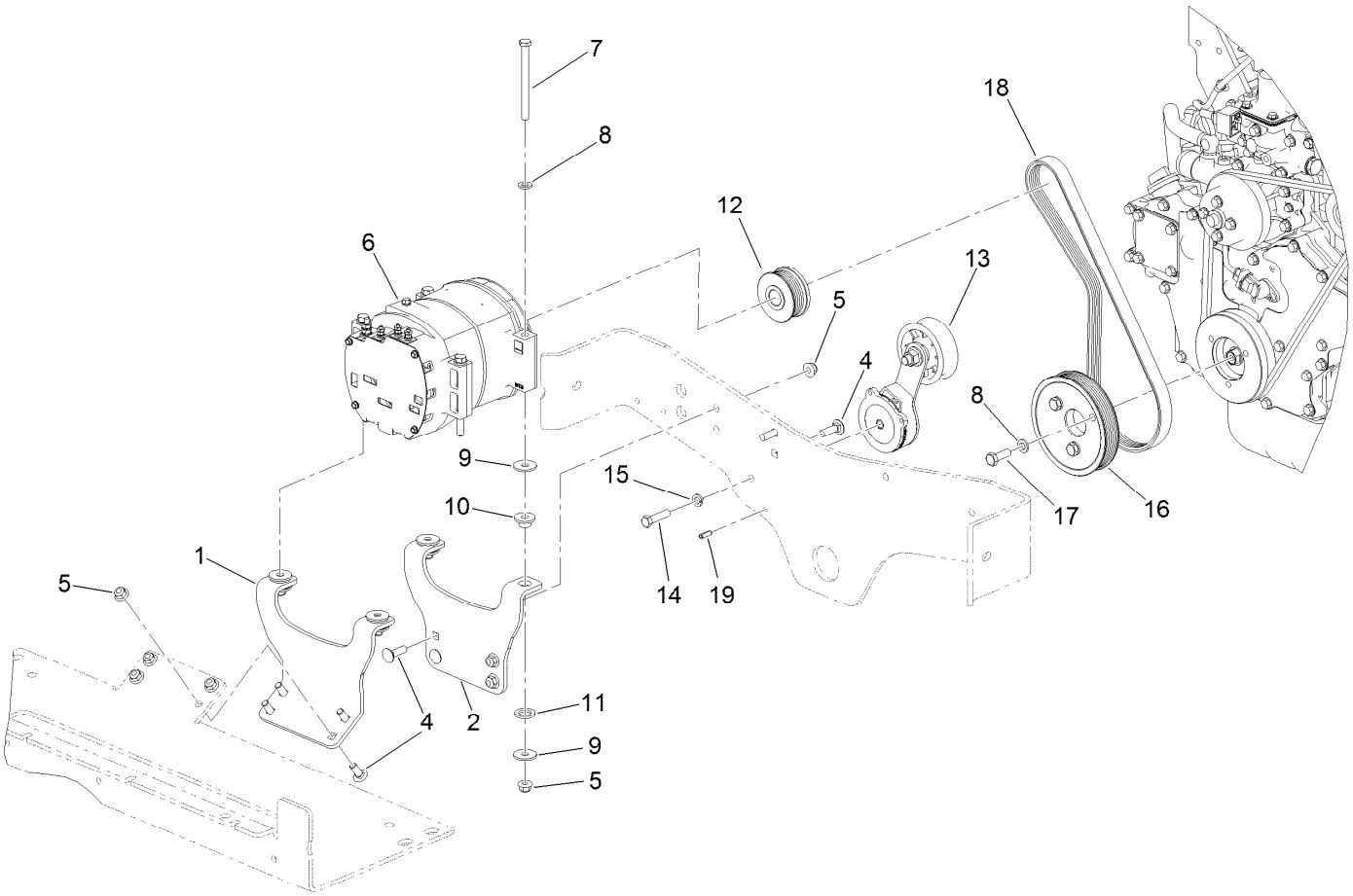

Alternator Assembly

Ref.	Part Number	Qty.	Description
1	131-2314-03	1	Bracket-Alternator
2	130-9164-03	1	Mount-Alternator, Vertical
4	3231-25	8	Bolt-CARR
5	104-8301	12	Nut-HF, NI
6	130-2491	1	Alternator-24V
7	323-23	4	Screw-HH
8	107-1413	7	Washer-Hardened
9	93-8806	8	Washer-Hardened
10	131-2313	4	Bushing-Alternator

Ref.	Part Number	Qty.	Description
11	131-2315	4	Washer-Delrin
12	130-9162	1	Pulley
13	130-2454	1	Tensioner
14	323-8	1	Screw-HH
15	3253-5	1	Washer-Lock
16	130-2403	1	Pulley
17	33115-030	3	Screw-HH
18	130-9165	1	Belt
19	32121-11	1	Pin-Roll

Hydraulic Cooling Assembly

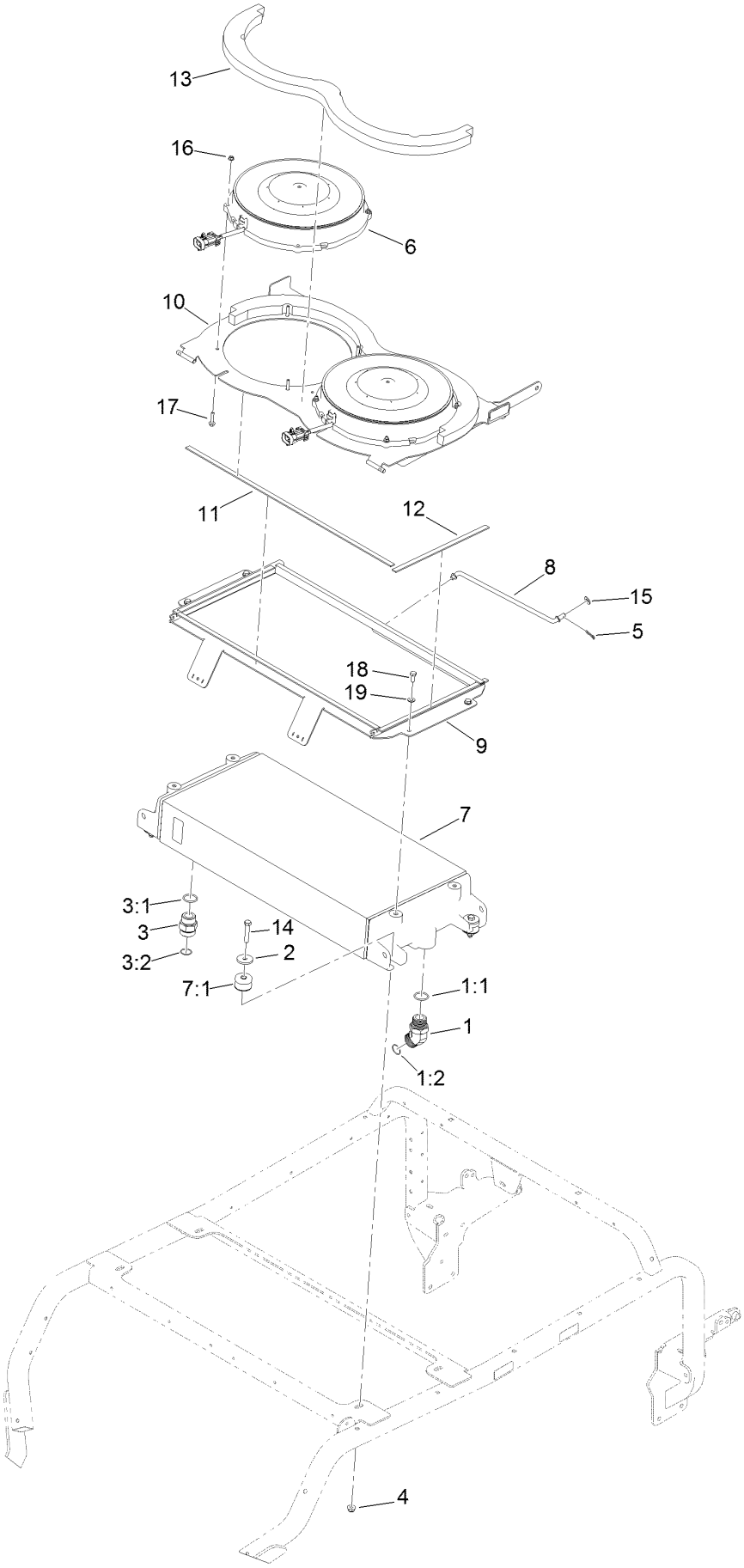

Hydraulic Cooling Assembly (continued)

Ref.	Part Number	Qty.	Description
1	104-3509	1	Fitting-HYD, 45 DEG
1:1	237-146	1	O-Ring
1:2	340-65	1	O-Ring
2	114-2120	4	Washer
3	104-3797	1	Fitting-Straight
3:1	237-146	1	O-Ring
3:2	340-65	1	O-Ring
4	104-8301	4	Nut-HF, NI
5	119-1415	1	Pin-Cotter, Locking
6	130-2531	2	Fan
7	130-2573	1	Oil Cooler ASM
7:1	132-1361	4	Mount-Isolator

Ref.	Part Number	Qty.	Description
8	130-9170	1	Rod-Prop, Cooler
9	130-9171-03	1	Plate-Seal, Cooler
10	132-1385	1	Cooler Top ASM
11	130-9173	2	Foam-Cooler, Long
12	130-9174	2	Foam-Cooler, Short
13	130-9175	2	Foam-Cooler, Top
14	323-10	4	Screw-HH
15	3256-24	1	Washer-Plain
16	104-7201	8	Nut-HF, NI
17	3234-21	8	Screw-HHF
18	3210-2	4	Screw-HH
19	3256-23	4	Washer-Plain

Radiator and Cooling Fan Assembly

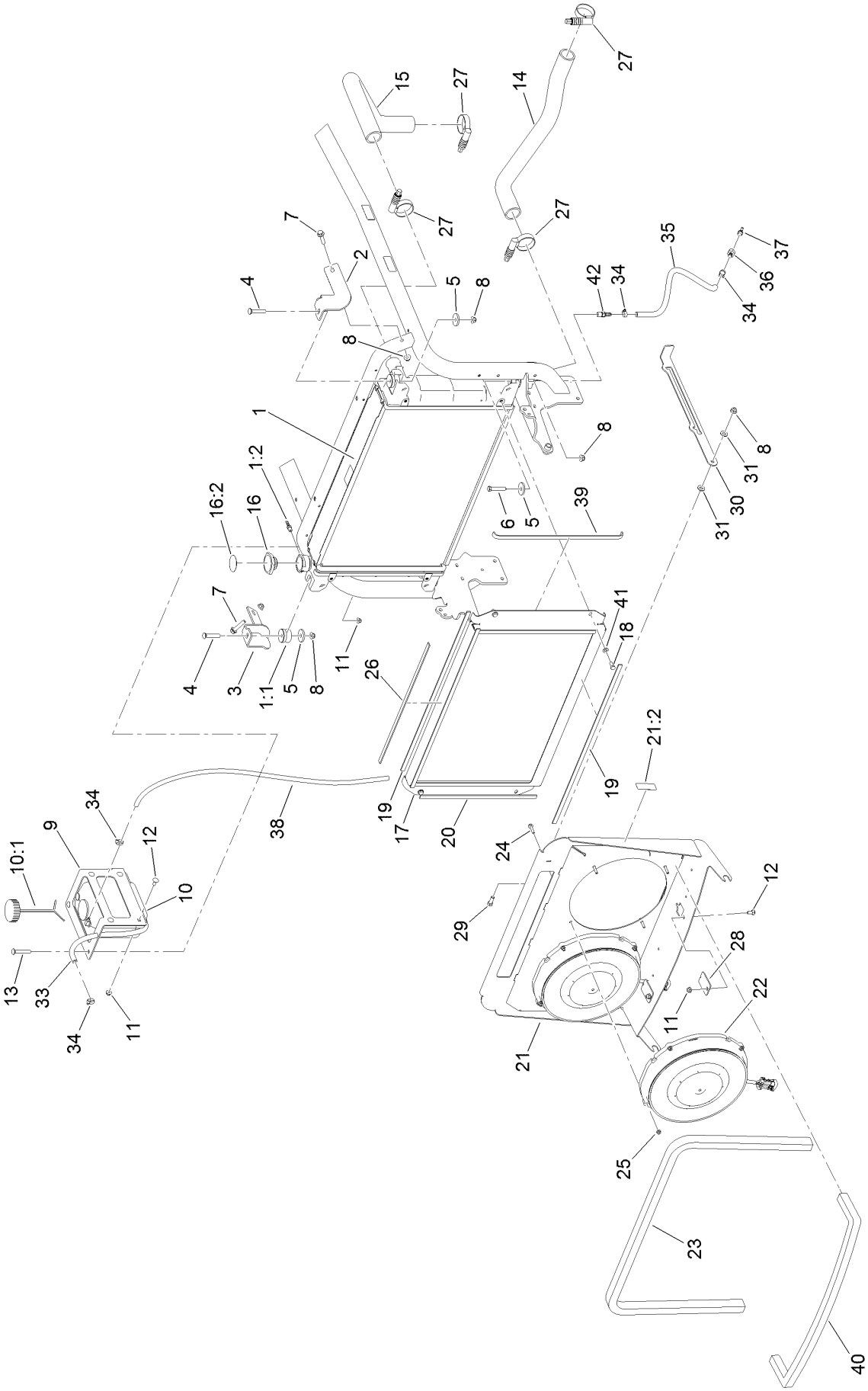

Radiator and Cooling Fan Assembly (continued)

Ref.	Part Number	Qty.	Description
1	130-2572	1	Radiator ASM
1:1	132-1361	4	Mount-Isolator
1:2	94-7220	1	Fitting-Barb, Hose
2	127-3638-03	1	Bracket-Mount, Radiator
3	127-3631-03	1	Bracket-Mount, Radiator
4	3231-6	2	Screw-CARR
5	114-2120	4	Washer
6	323-10	2	Screw-HH
7	3234-19	2	Screw-HHF
8	104-8301	7	Nut-HF, NI
9	130-2592-03	1	Bracket-Bottle, Radiator
10	120-5571	1	Coolant Reservoir ASM
10:1	87-7050	1	Cap-Reservoir
11	104-8300	8	Nut-HF, NI
12	3230-1	6	Bolt-CARR
13	3230-7	2	Bolt-CARR
14	130-9159	1	Hose-Radiator, Lower
15	127-3616	1	Hose-Radiator, Upper
16	131-2356	1	Radiator Cap ASM
16:2	117-3276	1	Decal-Danger
17	130-9185-03	1	Plate-Seal, Radiator
18	3210-3	4	Screw-HH
19	130-9181	4	Foam-Radiator, Long
20	130-9182	2	Foam-Radiator, Short
21	132-1386	1	Fan Shroud ASM
21:2	117-4766	2	Decal-Warning, Fan
22	130-2531	2	Fan
23	132-1347	1	Radiator Foam ASM
24	3234-21	8	Screw-HHF
25	104-7201	8	Nut-HF, NI
26	130-9183	1	Foam-Radiator, Top
27	121-7536	4	Clamp-Torque, Constant
28	130-9020	2	Plate-Cover
29	323-6	1	Screw-HH
30	130-9021-03	1	Rod-Prop, Radiator
31	66-2920	2	Washer-Friction
33	110-4109	1	Hose-Fuel
34	2412-108	5	Clamp-Worm
35	116-5087	1	Hose-Fuel
36	354-94	1	Fitting-Female, Barbed
37	93-5528	1	Fitting-Cock, Drain
38	115-2370	1	Hose-Fuel
39	131-2289	2	Foam-Radiator
40	131-2322	1	Foam-Shroud, Lower
41	3256-23	4	Washer-Plain
42	108-0342	1	Fitting-Straight

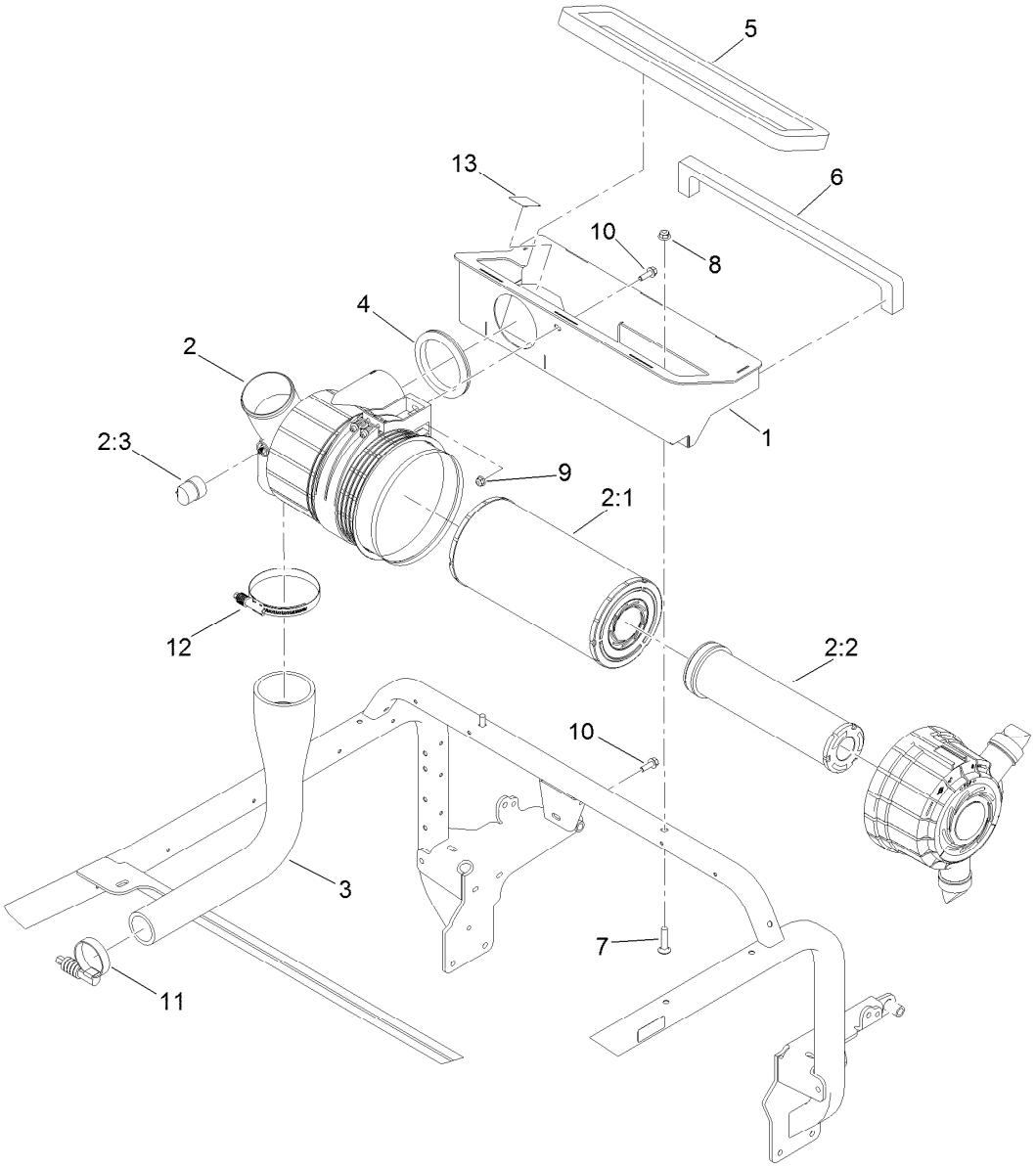

Air Cleaner Assembly

Ref.	Part Number	Qty.	Description
1	130-9176-03	1	Air Box ASM
2	130-9160	1	Air Filter ASM
2:1	108-3815	1	Filter-Air
2:2	130-9070	1	Element-Filter, Safety
2:3	69-1940	1	Indicator-Electrical
3	130-2512	1	Hose-Intake, Air
4	130-2579	1	Grommet
5	130-9179	1	Foam-Airbox

Ref.	Part Number	Qty.	Description
6	130-9180	1	Foam-Airbox, Rear
7	3231-5	2	Screw-CARR
8	104-8301	2	Nut-HF, NI
9	104-8300	2	Nut-HF, NI
10	3234-29	2	Screw-HHF
11	AU110569	1	Clamp-Torque, Constant
12	131-2229	1	Clamp-Hose
13	115-8155	1	Decal-Warning

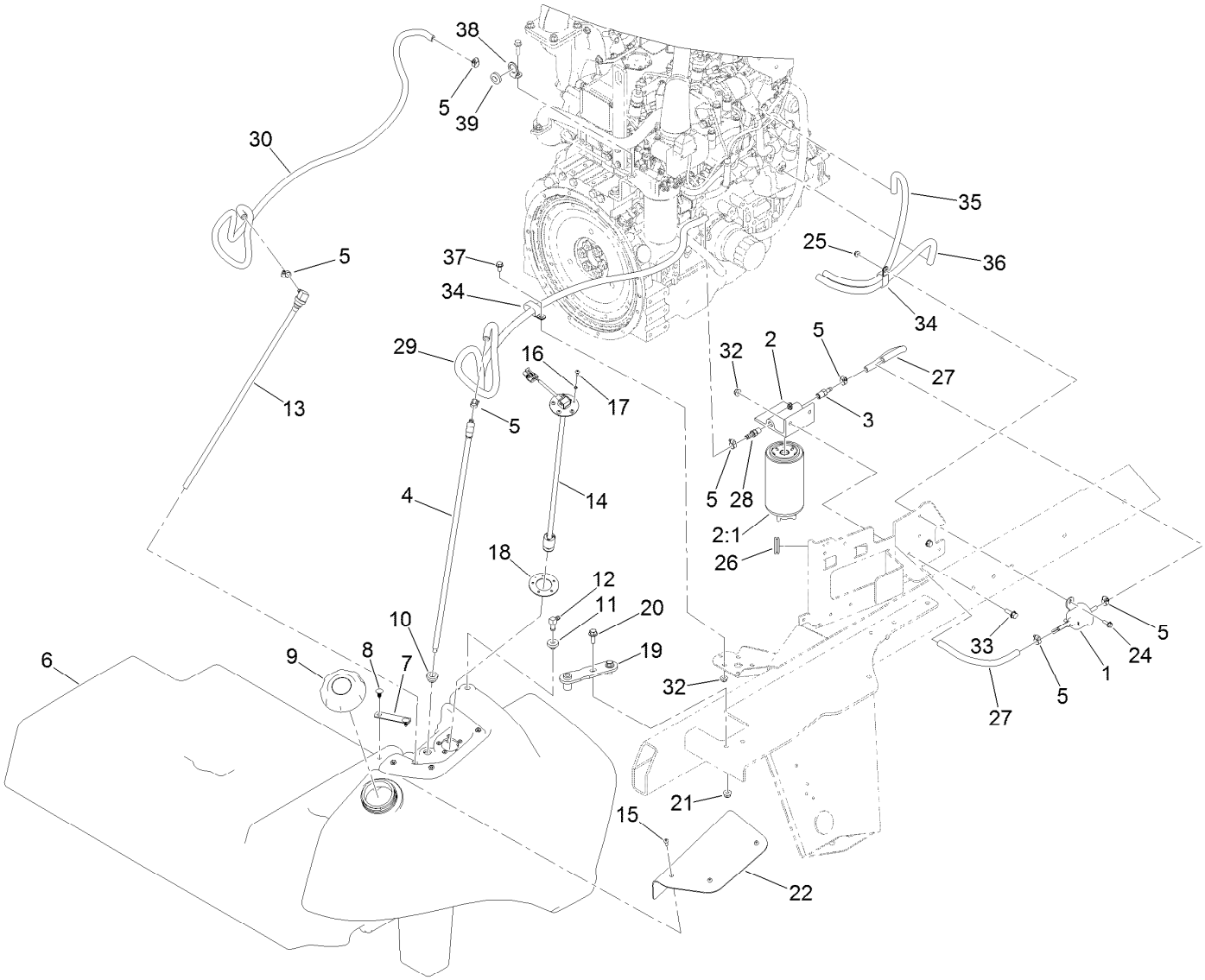

Fuel System Assembly

Ref.	Part Number	Qty.	Description
1	121-5613	1	Pump-Fuel, Electric
2	125-2914	1	Filter-Separator
2:1	125-2915	1	Filter-Fuel/Water Separator
3	353-783	1	Fitting-STR
4	119-7748	1	Pipe-Stand, Fuel
5	2412-108	12	Clamp-Worm
6	131-2284	1	Fuel Tank ASM
7	94-6821	2	Clamp-Wire
8	117-2382	4	Plug-Plastic
9	125-9171	1	Cap-Fuel
10	104-0790	2	Bushing
11	46-6560	1	Bushing
12	46-6550	1	Fitting-Elbow, 90 DEG
13	130-9149	1	Pipe-Stand, Return
14	121-1688	1	Gauge-Fuel
15	3274-31	3	Screw-HSBH
16	3253-15	5	Washer-Lock
17	32122-24	5	Screw-PTH
18	121-1707	1	Gasket-Fuel, Viton

Ref.	Part Number	Qty.	Description
19	114-0094	1	Hold Down-Tank
20	3234-42	2	Screw-HHF
21	104-8301	2	Nut-HF, NI
22	114-4939-03	1	Cover-Fitting, Fuel
24	3234-4	2	Screw-HHF
25	104-7201	2	Nut-HF, NI
26	1-543286	1	Grommet
27	130-9191	2	Hose-Fuel
28	108-0342	1	Fitting-Straight
29	130-9143	1	Hose-Fuel
30	108-3282	1	Hose-Fuel
32	104-8300	3	Nut-HF, NI
33	3234-29	2	Screw-HHF
34	120-1959	2	Clamp
35	109-0308	1	Hose-Fuel
36	114-0832	1	Hose-Fuel
37	3234-7	1	Screw-HHF
38	132-1329	1	Bracket-Hose Retainer
39	237-124	1	Grommet

Traction Hydraulic Assembly

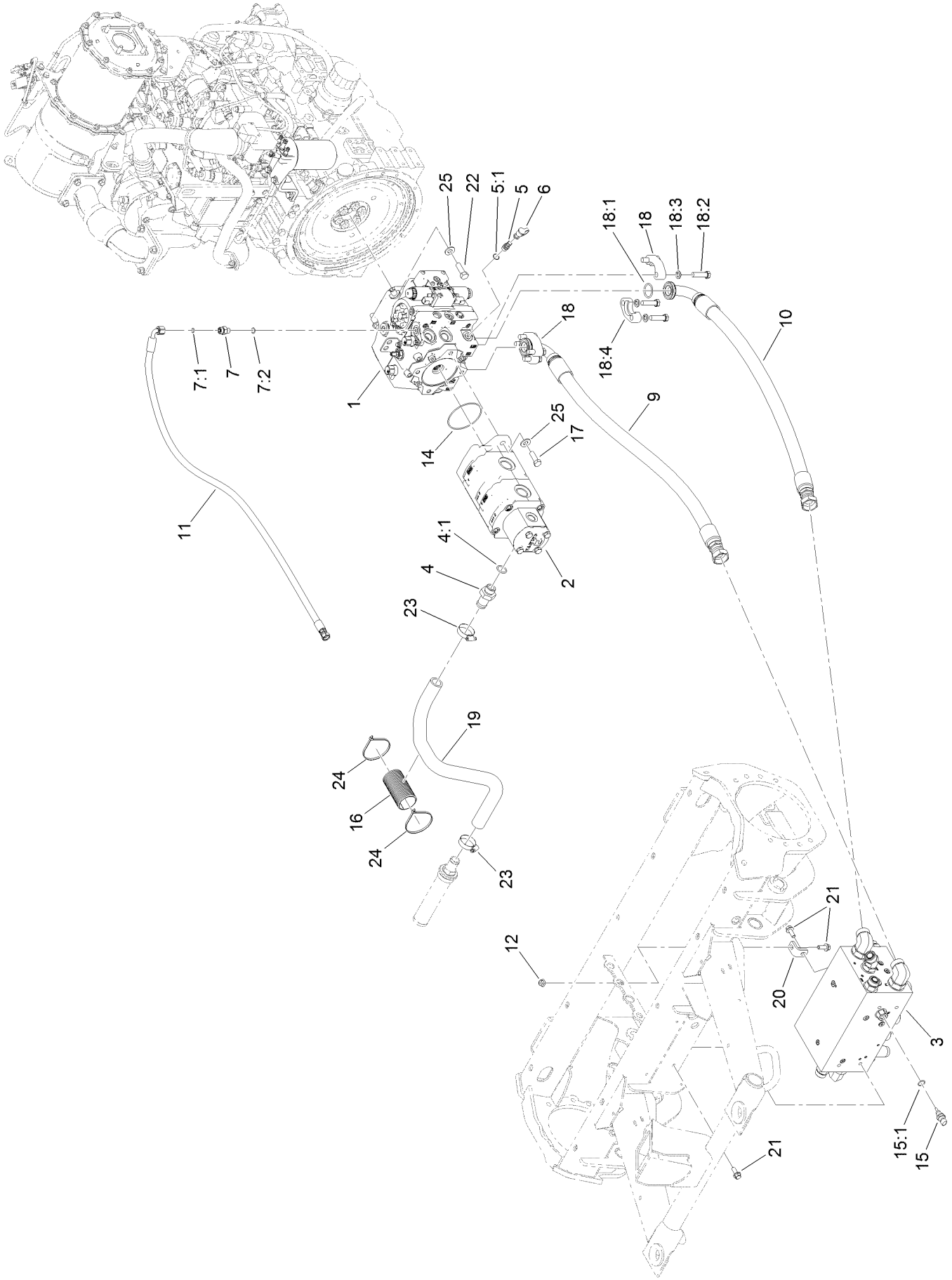

Traction Hydraulic Assembly (continued)

Ref.	Part Number	Qty.	Description
1	130-9150	1	Hydraulic Piston Pump ASM
2	130-2520	1	Hydraulic Triple Gear Pump ASM
3		1	Traction Manifold ASM ●
4	99-3017	1	Fitting
4:1	237-81	1	O-Ring
5	59-7410	3	Fitting-Diagnostic
5:1	237-42	1	O-Ring
6	354-79	3	Cap-Dust
7	340-2	1	Fitting-Straight
7:1	237-22	1	O-Ring
7:2	237-42	1	O-Ring
9	127-3450	1	Hydraulic Hose ASM
10	127-3451	1	Hydraulic Hose ASM
11	127-3521	1	Hydraulic Hose ASM
12	104-8301	1	Nut-HF, NI
14	107-9447	1	O-Ring
15	110-8829	1	Sender-Temperature
15:1	237-42	1	O-Ring
16	115-5523	1	Guard-Hose
17	121-1525	2	Screw-HH
18	121-3903	2	Flange Kit
18:1	121-3904	1	O-Ring
18:2	33116-045	4	Screw-HH
18:3	48-8070	4	Washer-Lock
18:4		2	Flange ●
19	130-2550	1	Hose-Suction
20	130-2571	1	Tab-Mount, Manifold
21	131-2220	6	Screw-HHF
22	AU426-824	4	Screw-HH
23	2412-111	2	Clamp-Hose, W/Liner
24	3290-379	2	Tie-Cable
25	87-7270	6	Washer-Thrust

● Not serviced separately

Piston Pump Assembly No. 130-9150

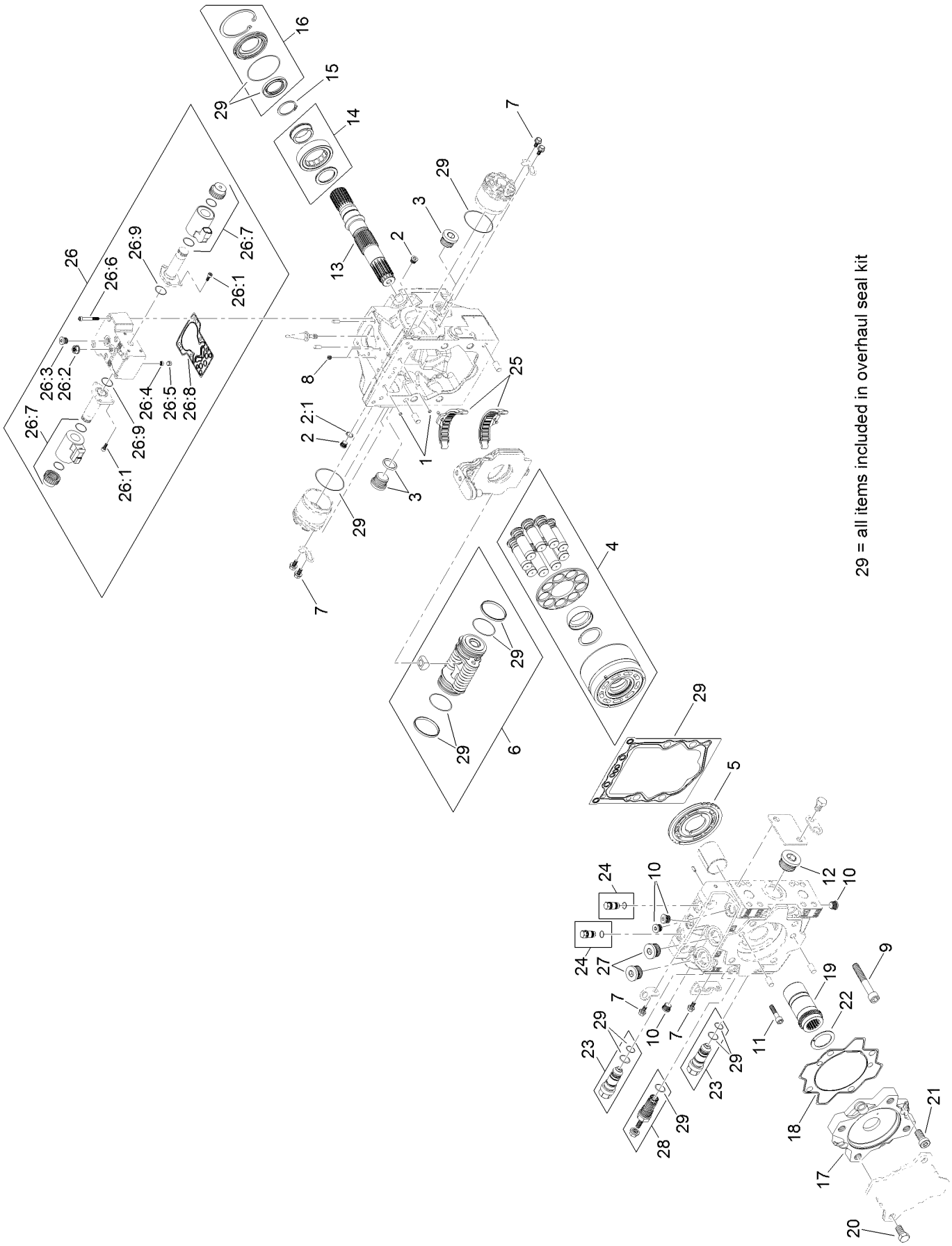

Piston Pump Assembly No. 130-9150 (continued)

Ref.	Part Number	Qty.	Description
1	125-5266	2	Screen
2	75-0170	2	Plug-Thread, Straight
2:1	92-8777	1	O-Ring
3	69-3130	2	Plug
4	125-5267	1	Cylinder Block Kit
5	125-5268	1	Valve Plate, CW
6	125-5271	1	Servo Piston ASM
7	125-5270	8	Screw
8	125-5276	2	Orifice (0.8)
9	125-5277	4	Screw
10	125-5300	4	Plug ASM
11	125-5275	2	Screw
12	125-5301	1	Plug
13	125-5278	1	Shaft
14	125-5279	1	Bearing-Roller
15	125-5280	1	Ring-Retaining
16	125-5296	1	Shaft Seal Kit
17	125-5284	1	Adapter
18	125-5285	1	Seal-Adapter
19	125-5286	1	Coupling
20	125-5281	4	Screw
21	125-5282	4	Screw
22	125-5287	1	Plate-Thrust
23	125-5291	2	Valve-Relief, High Pressure
24	125-5292	2	Pressure Limiter Plug ASM
25	125-5293	1	Swashplate Bearing Kit
26	125-5295	1	Control Kit (12 Volt)
26:1	125-5272	6	Screw
26:2	125-5273	1	Nut-Seal
26:3	125-5302	1	Plug
26:4	125-5266	1	Screen
26:5	125-5269	1	Ring-Locking
26:6	125-5274	6	Screw
26:7	125-5294	2	Coil Kit
26:8	125-5283	1	Gasket-Control
26:9	125-5288	2	O-Ring
27	125-5303	2	Plug ASM
28	125-5297	1	Charge Relief Kit
29	125-5299	1	Overhaul Seal Kit

Hydraulic Gear Pump Assembly No. 130-2520

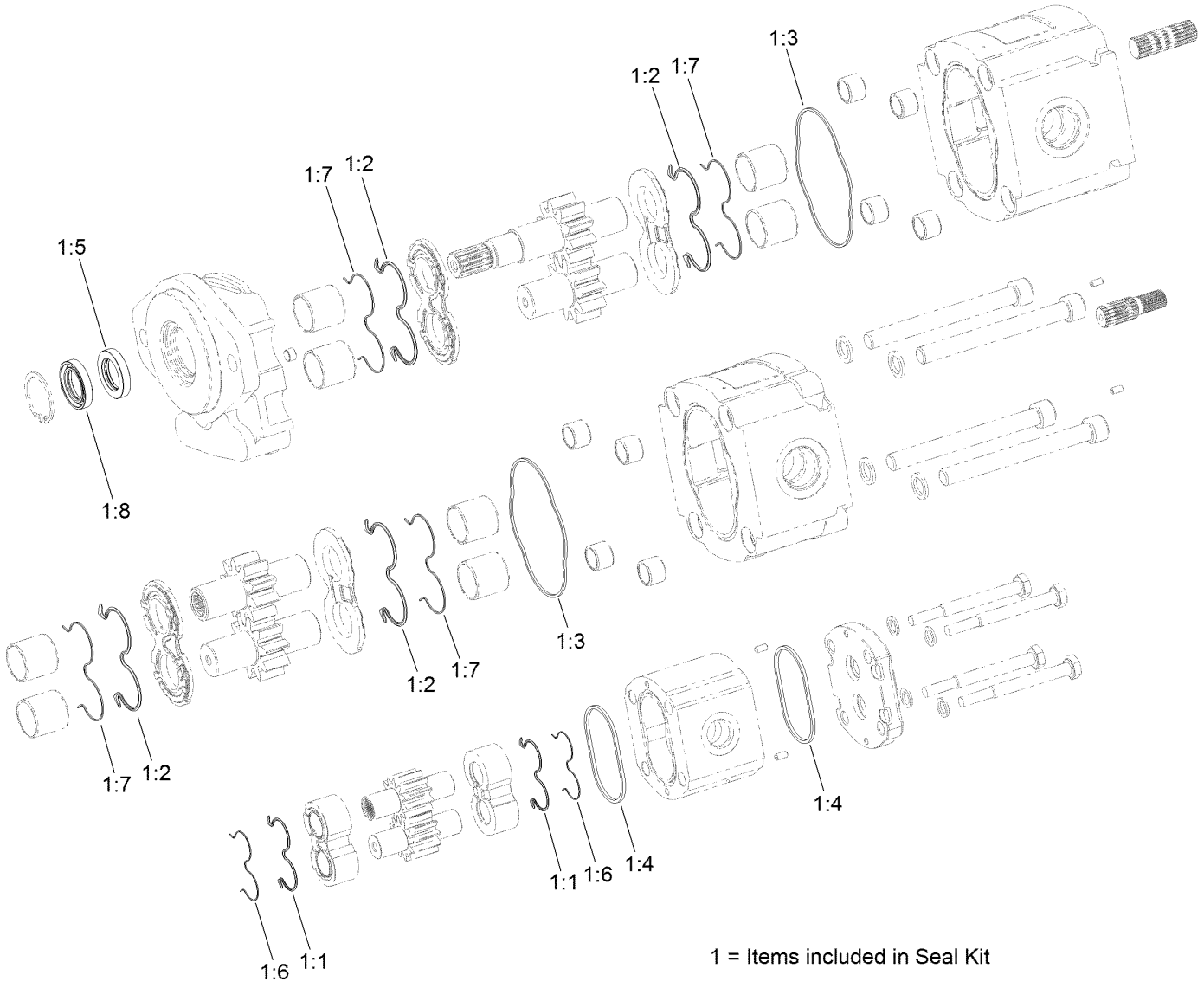

1 = Items included in Seal Kit

Hydraulic Gear Pump Assembly No. 130-2520 (continued)

Ref.	Part Number	Qty.	Description
1	133-2484	1	Seal Kit
1:1		2	Seal ●
1:2		4	Seal ●
1:3		2	Seal-Standard ●
1:4		2	Seal-Standard ●
1:5		1	Seal-Shaft ●
1:6		2	Antiextrusion ●
1:7		4	Ring-Antiextrusion ●
1:8		1	Seal-Shaft ●

● Not serviced separately

Traction Valve Assembly

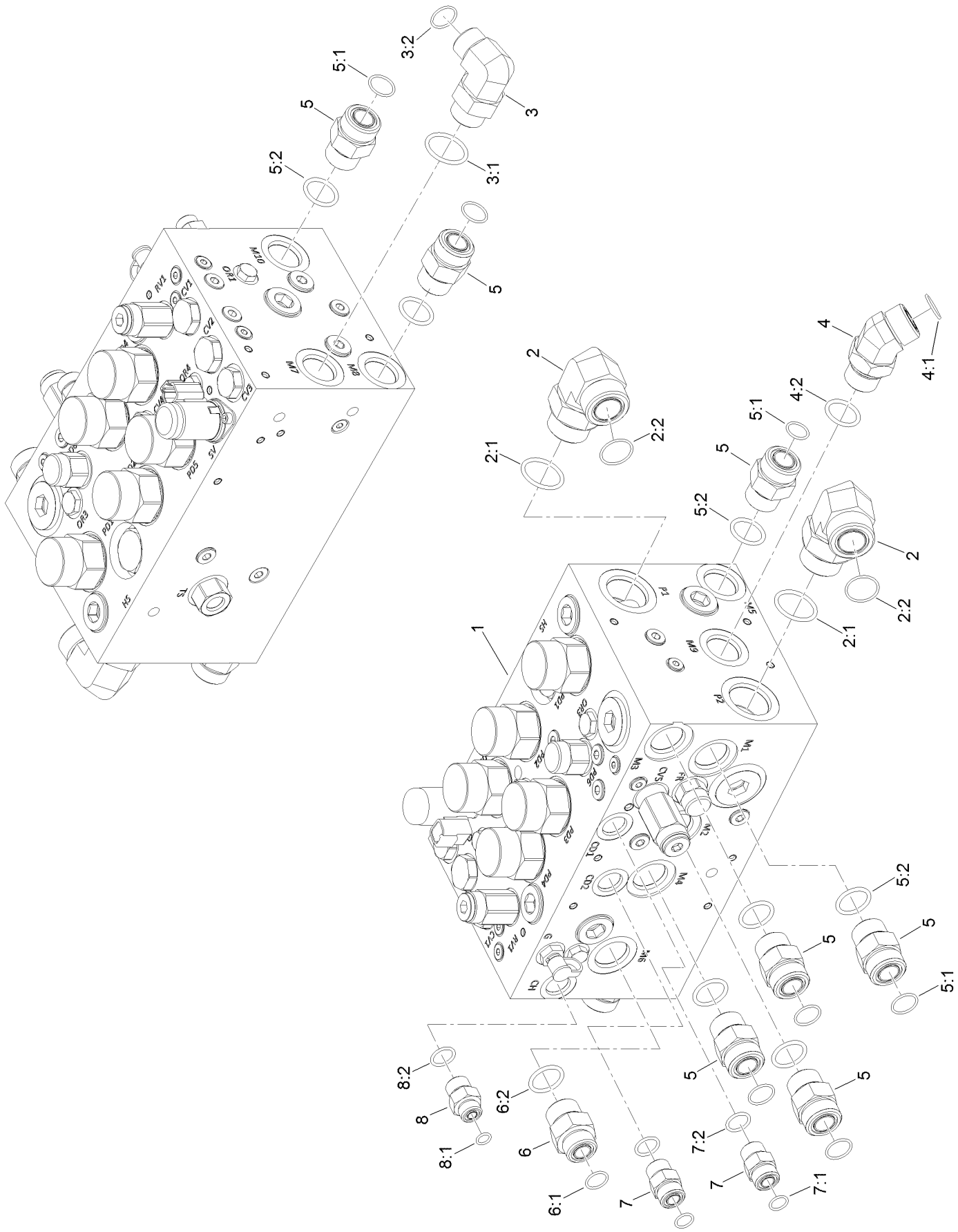

Traction Valve Assembly (continued)

Ref.	Part Number	Qty.	Description
1	132-1397	1	Traction Valve Manifold ASM
2	340-129	2	Fitting-Elbow, 90 DEG
2:1	237-146	1	O-Ring
2:2	340-65	1	O-Ring
3	340-139	1	Fitting-Elbow 90
3:1	237-81	1	O-Ring
3:2	237-65	1	O-Ring
4	100-5530	1	Fitting-45 DEG
4:1	237-58	1	O-Ring
4:2	237-81	1	O-Ring
5	340-9	7	Fitting-STR
5:1	237-58	1	O-Ring
5:2	237-81	1	O-Ring
6	340-8	1	Fitting-Straight
6:1	237-65	1	O-Ring
6:2	237-81	1	O-Ring
7	340-4	2	Fitting-Straight
7:1	237-30	1	O-Ring
7:2	237-79	1	O-Ring
8	340-3	1	Fitting-Straight
8:1	237-22	1	O-Ring
8:2	237-79	1	O-Ring

Hydraulic Traction Valve Manifold
Assembly No. 132-1397

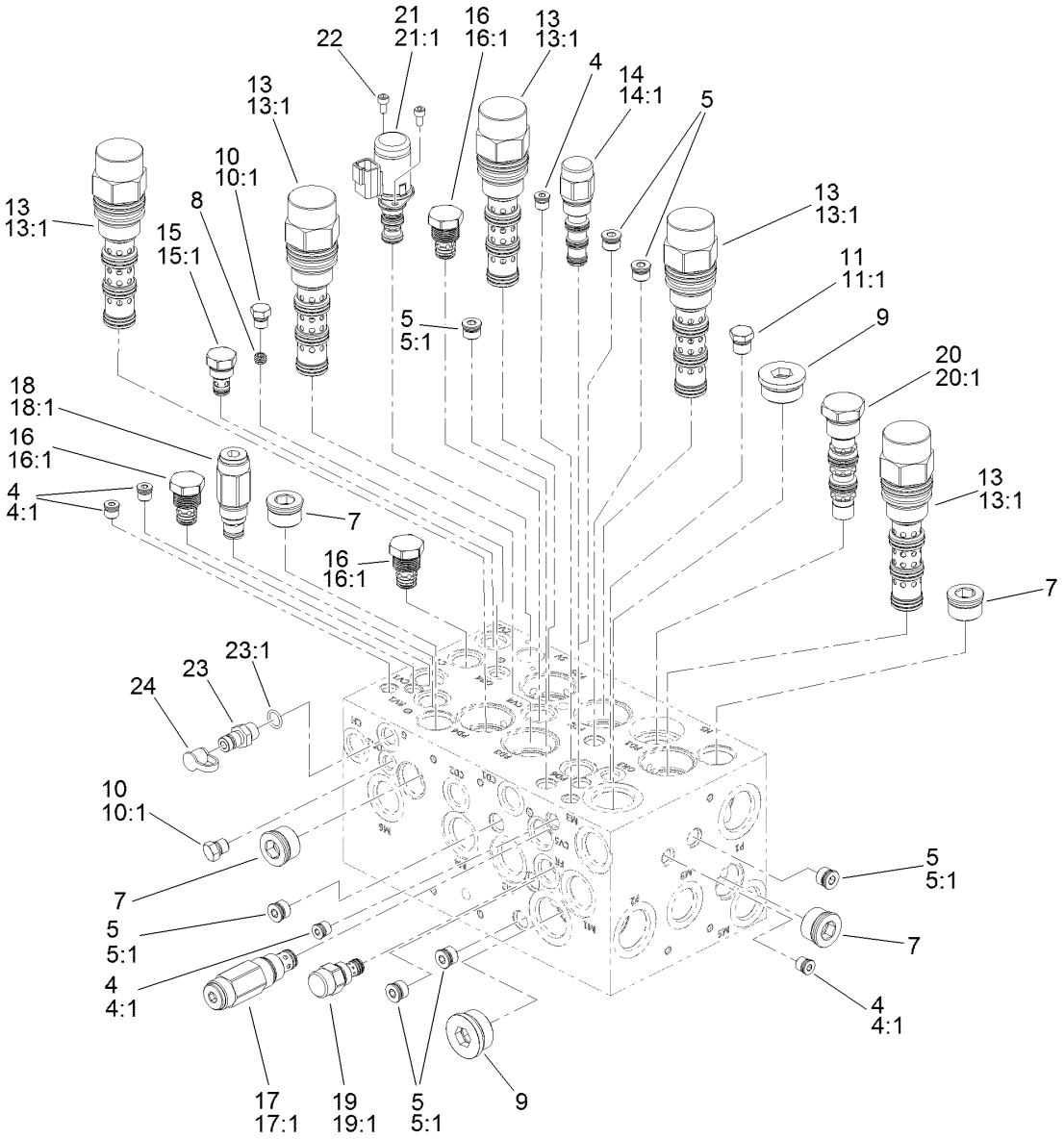

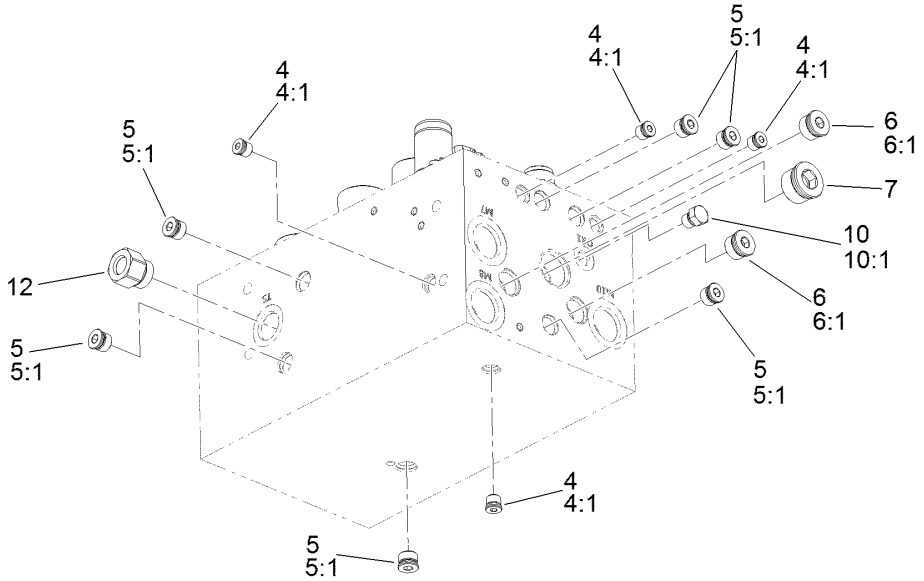

Hydraulic Traction Valve Manifold Assembly No. 132-1397 (continued)

Ref.	Part Number	Qty.	Description
4	353-990	9	Plug ASM
4:1	237-78	1	O-Ring
5	353-989	13	Plug-Hex, Hollow
5:1	237-42	1	O-Ring
6	353-988	2	Plug-Hex
6:1	237-79	1	O-Ring
7	133-2444	5	Zero-Leak Plug, SAE-12
8	110-5973	1	Orifice-0.030
9	133-2445	2	Plug-Socket, Hex
10	353-512	3	Plug
10:1	237-78	1	O-Ring
11	353-508	1	Plug-HH
11:1	237-42	1	O-Ring
12	132-4915	1	Fitting-Adapter, Temp Sensor
13	132-4914	5	Valve-Piloted Directional, Vented
13:1	137-5511	1	Seal Kit
14	132-4913	1	Vent-External, Piloted
14:1	110-8908	1	Spool Valve Seal Kit
15	105-9321	1	Check Valve ASM
15:1	105-9156	1	Seal Kit
16	110-8881	3	Valve-Check
16:1	105-9159	1	Seal Kit
17	132-4912	1	Valve-Check
17:1	110-6316	1	Seal Kit
18	132-4911	1	Valve-Relief, Poppet Type
18:1	130-8183	1	Seal Kit
19	132-4910	1	Regulator-Flow, Pressure Comp
19:1	107-7527	1	Seal Kit
20	132-4909	1	Valve-Shuttle, Hot Oil
20:1	120-7597	1	Seal Kit
21	125-7554	1	Valve-Solenoid
21:1	125-7561	1	Seal Kit
22	132-4908	2	Screw-Cap, Soc HD
23	59-7410	1	Fitting-Diagnostic
23:1	237-42	1	O-Ring
24	354-79	1	Cap-Dust

Hydraulic Traction Motors Assembly

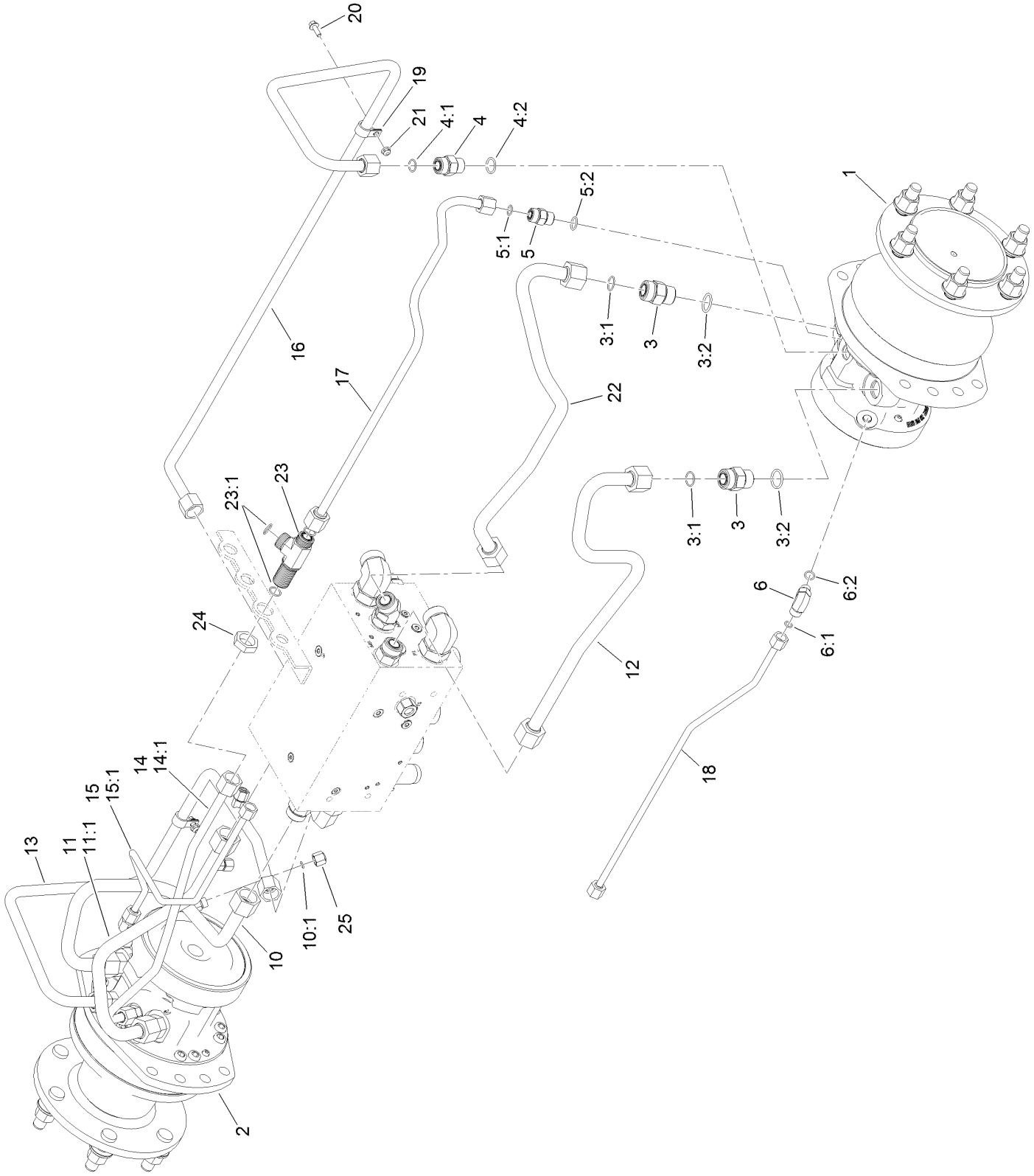

Hydraulic Traction Motors Assembly (continued)

Ref.	Part Number	Qty.	Description
1	125-5391	1	LH Hydraulic Motor ASM
2	125-5434	1	RH Hydraulic Motor ASM
3	340-9	4	Fitting-STR
3:1	237-58	1	O-Ring
3:2	237-81	1	O-Ring
4	340-7	2	Fitting-Straight
4:1	237-65	1	O-Ring
4:2	237-80	1	O-Ring
5	340-4	2	Fitting-Straight
5:1	237-30	1	O-Ring
5:2	237-79	1	O-Ring
6	340-77	2	Fitting-Elbow, 90 DEG
6:1	237-22	1	O-Ring
6:2	237-42	1	O-Ring
10	130-2533	1	Hydraulic Tube ASM
10:1	237-21	1	O-Ring
11	130-2534	1	Hydraulic Tube ASM
11:1	237-21	1	O-Ring
12	130-2537	1	Hydraulic Tube ASM
13	130-9074	1	Hydraulic Tube ASM
14	130-2540	1	Hydraulic Tube ASM
14:1	237-30	1	O-Ring
15	130-2541	1	Hydraulic Tube ASM
15:1	237-22	1	O-Ring
16	130-9075	1	Hydraulic Tube ASM
17	130-2554	1	Hydraulic Tube ASM
18	130-2555	1	Hydraulic Tube ASM
19	2412-87	2	Clamp-Cable
20	3234-4	2	Screw-HHF
21	104-7201	2	Nut-HF, NI
22	130-2556	1	Hydraulic Tube ASM
23	94-5350	1	Fitting-Tee
23:1	237-65	3	O-Ring
24	340-74	1	Nut-Lock, Bulkhead
25	117-3297	3	Fitting-Cap

Hydraulic Motor Assembly No. 125-5391

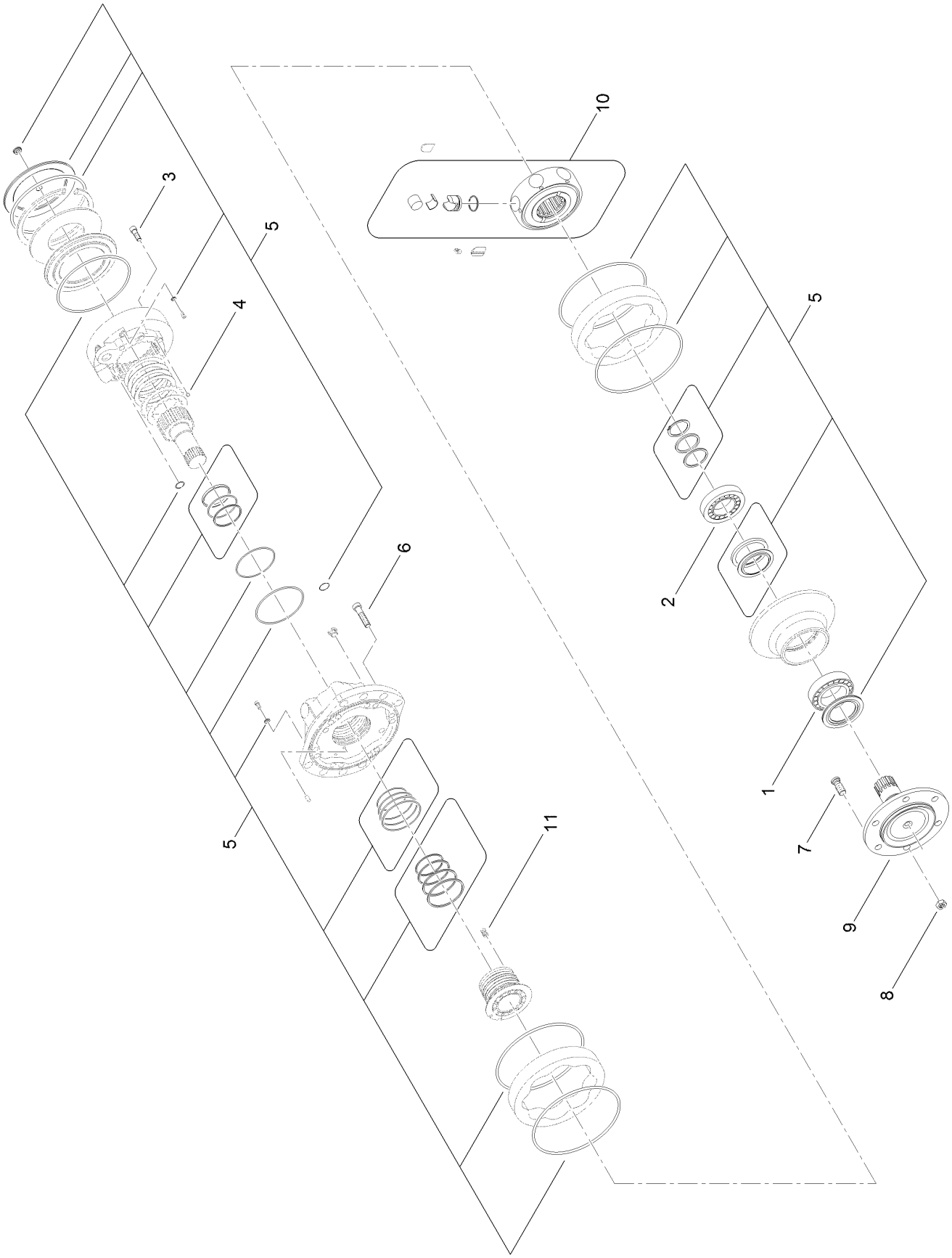

Hydraulic Motor Assembly No. 125-5391 (continued)

Ref.	Part Number	Qty.	Description
1	137-5627	1	Bearing
2	137-5628	1	Bearing
3	137-5649	1	Screw
4	137-5629	1	Shear Ball
5	137-5630	1	Master Seal Kit
6	137-5631	1	Screw
7	137-5632	1	Stud
8	137-5633	1	Lug Nut
9	137-5634	1	Shaft
10	137-5578	1	Rotating Group ASM
11	137-5583	1	Spring

Hydraulic Motor Assembly No. 125-5434

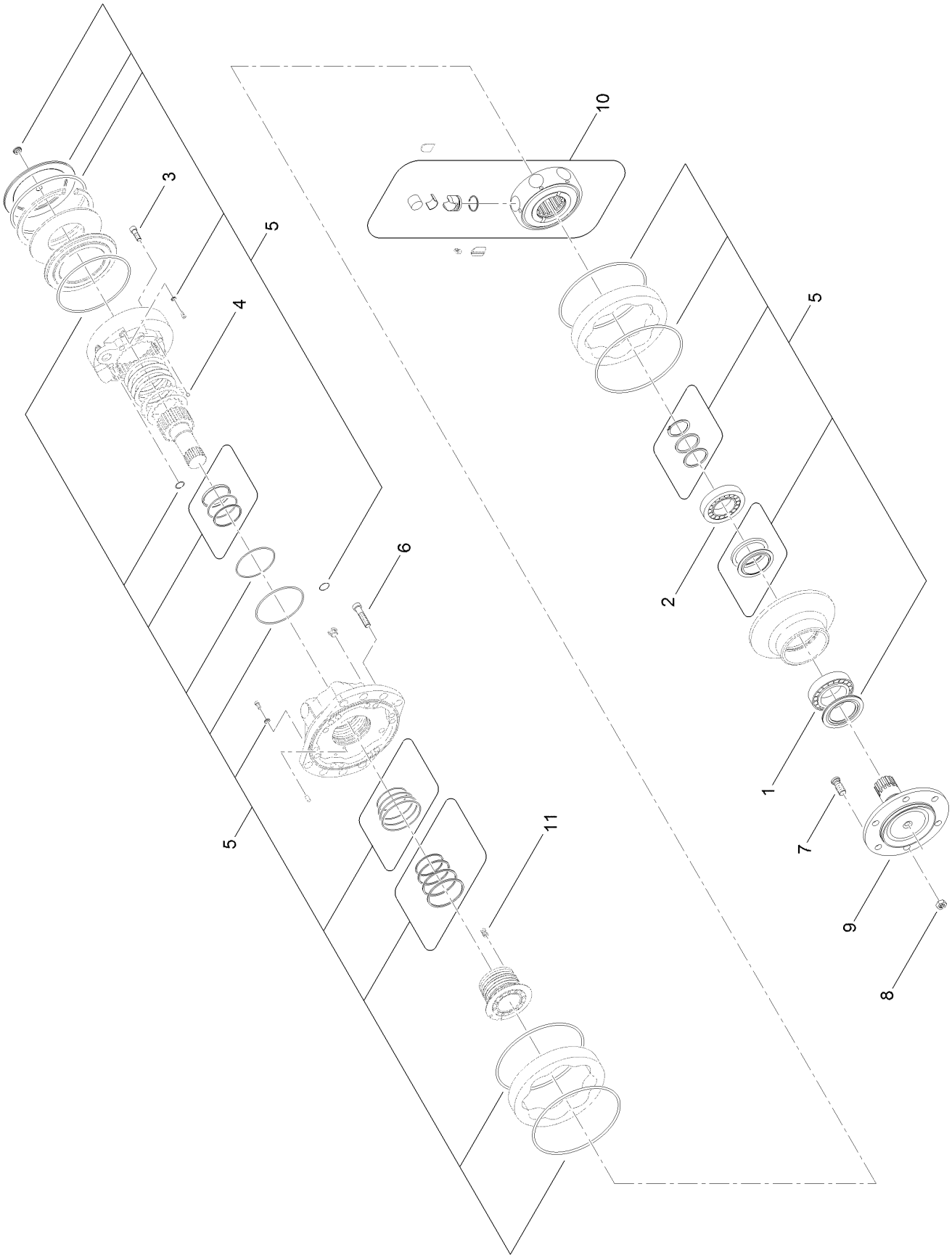

Hydraulic Motor Assembly No. 125-5434 (continued)

Ref.	Part Number	Qty.	Description
1	137-5627	1	Bearing
2	137-5628	1	Bearing
3	137-5649	1	Screw
4	137-5629	1	Shear Ball
5	137-5630	1	Master Seal Kit
6	137-5631	1	Screw
7	137-5632	1	Stud
8	137-5633	1	Lug Nut
9	137-5634	1	Shaft
10	137-5578	1	Rotating Group ASM
11	137-5583	1	Spring

Hydraulic Traction Assembly

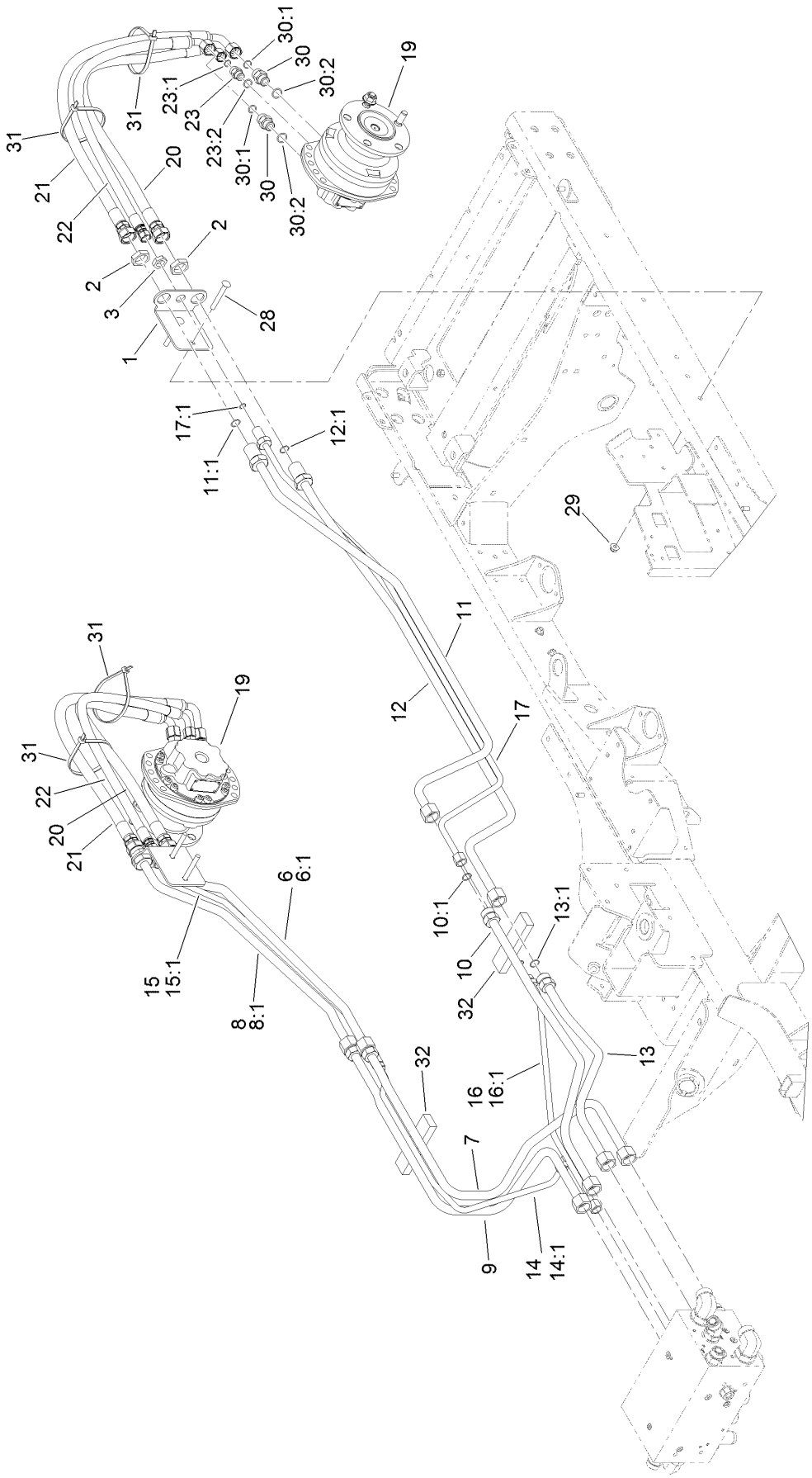

Hydraulic Traction Assembly (continued)

Ref.	Part Number	Qty.	Description
1	131-2377-01	2	Support-Bulkhead
2	340-126	4	Nut-Bulkhead
3	340-127	2	Nut-Bulkhead
6	131-2378	1	Hydraulic Tube ASM
6:1	237-58	1	O-Ring
7	131-2397	1	Hydraulic Tube ASM
8	131-2379	1	Hydraulic Tube ASM
8:1	237-58	1	O-Ring
9	131-2398	1	Hydraulic Tube ASM
10	130-2464	1	Hydraulic Tube ASM
10:1	237-58	1	O-Ring
11	131-2388	1	Hydraulic Tube ASM
11:1	237-58	1	O-Ring
12	131-2389	1	Hydraulic Tube ASM
12:1	237-58	1	O-Ring
13	130-2467	1	Hydraulic Tube ASM
13:1	237-58	1	O-Ring
14	131-2384	1	Hydraulic Tube ASM
14:1	237-30	1	O-Ring
15	131-2385	1	Hydraulic Tube ASM
15:1	237-30	1	O-Ring
16	131-2386	1	Hydraulic Tube ASM
16:1	237-30	2	O-Ring
17	131-2387	1	Hydraulic Tube ASM
17:1	237-30	1	O-Ring
19	132-1425	2	Hydraulic Motor ASM
20	127-3568	2	Hydraulic Hose ASM
21	127-3569	2	Hydraulic Hose ASM
22	131-2383	2	Hydraulic Hose ASM
23	340-4	2	Fitting-Straight
23:1	237-30	1	O-Ring
23:2	237-79	1	O-Ring
28	3231-42	4	Screw-CARR
29	104-8301	4	Nut-HF, NI
30	340-7	4	Fitting-Straight
30:1	237-65	1	O-Ring
30:2	237-80	1	O-Ring
31	3334-945	4	Tie-Cable
32	132-1393	2	Foam-Support, Tube

Hydraulic Motor Assembly No. 132-1425

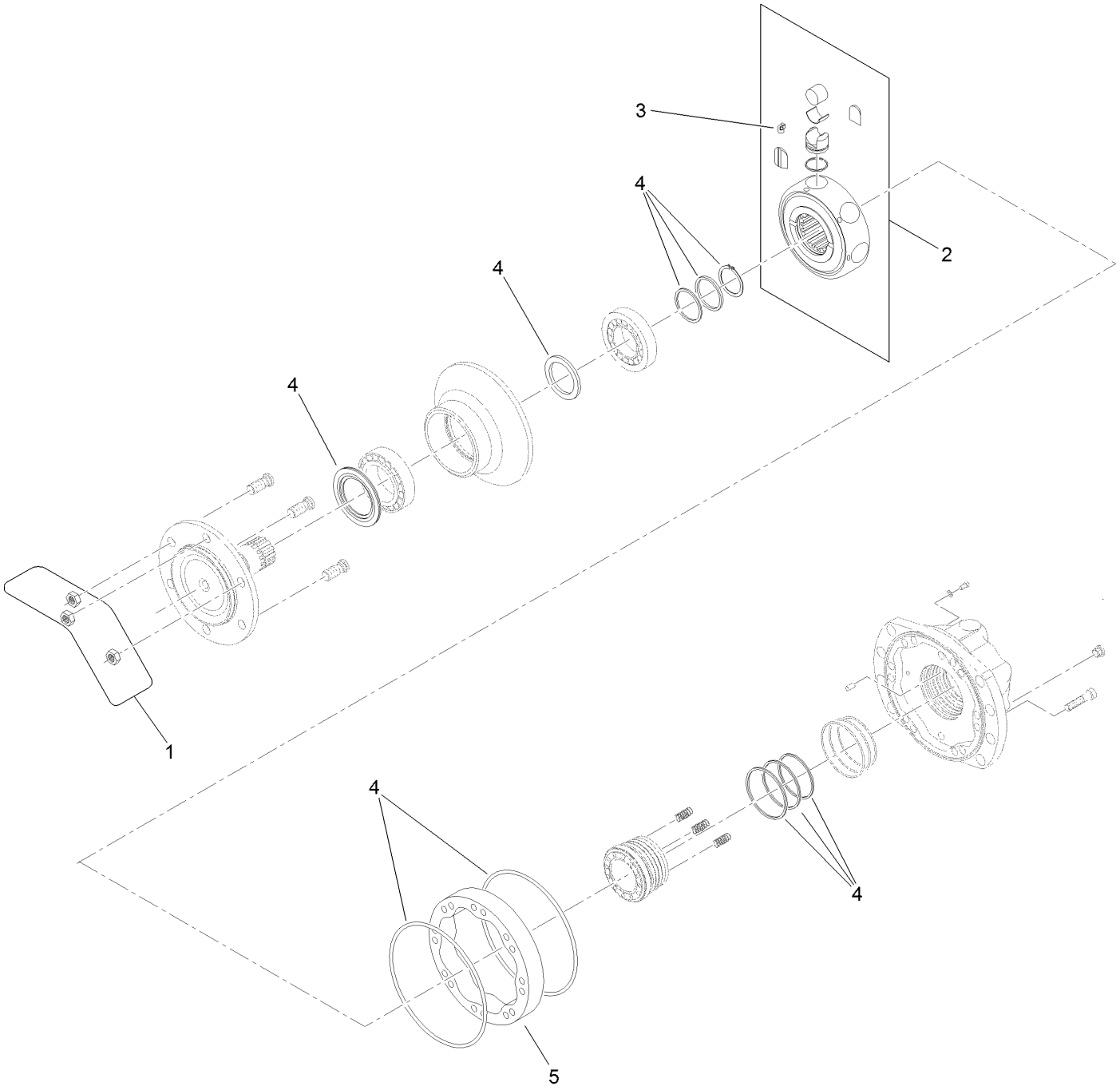

Hydraulic Motor Assembly No. 132-1425 (continued)

Ref.	Part Number	Qty.	Description
1	133-2517	1	Nut-Flange
2	133-2518	1	Rotating Group ASM
3	133-2519	1	Clip-Retaining
4	133-2520	1	Seal Kit
5	133-2521	1	Cam-Z

Hydraulic Tank Assembly

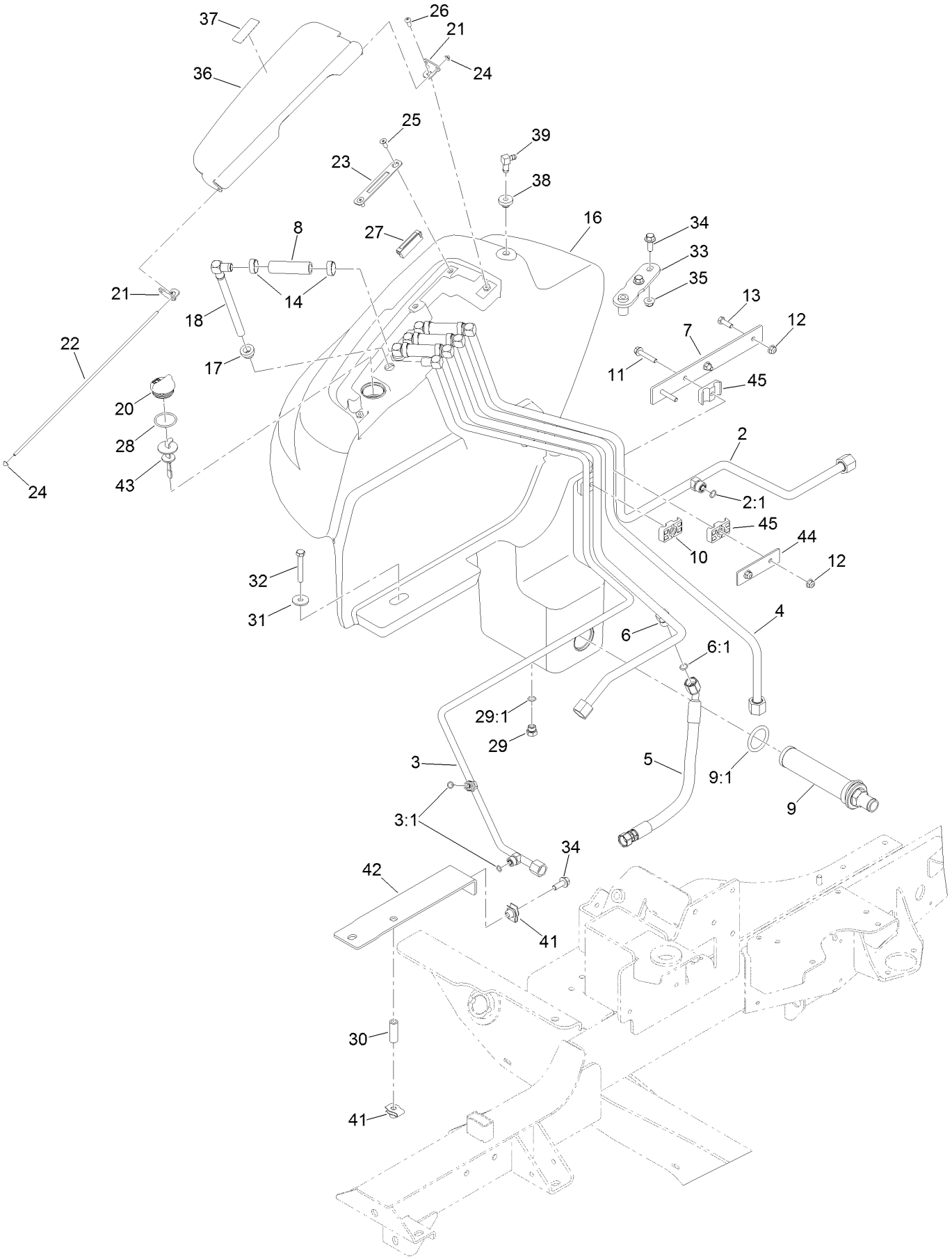

Hydraulic Tank Assembly (continued)

Ref.	Part Number	Qty.	Description
2	125-5357	1	Hydraulic Tube ASM
2:1	237-30	1	O-Ring
3	130-2553	1	Hydraulic Tube ASM
3:1	237-22	2	O-Ring
4	130-2511	1	Hydraulic Tube ASM
5	130-2543	1	Hydraulic Hose ASM
6	130-9036	1	Hydraulic Tube ASM
6:1	237-30	1	O-Ring
7	114-4919-03	1	Plate-Mount, Tube
8	114-4920	4	Hose
9	104-7546	1	Tank Strainer ASM
9:1	340-136	1	O-Ring
10	56-7977	2	Clamp-Tube
11	94-5780	2	Screw-HWH
12	104-8300	4	Nut-HF, NI
13	322-5	2	Screw-HH
14	2412-36	8	Clamp-Hose
16	119-7726	1	Hydraulic Tank ASM
17	104-0790	4	Bushing
18	132-1384	4	Tube-Drop
20	93-7498	1	Plug-Plastic
21	114-0940	2	Bracket-Hinge
22	114-0904	1	Rod

Ref.	Part Number	Qty.	Description
23	114-0941	1	Plate-Latch
24	1-803001	2	Nut-Push
25	3274-47	2	Screw-HSFH
26	3274-31	2	Screw-HSBH
27	58-4250	1	Catch-Magnetic
28	94-8166	1	O-Ring
29	353-508	1	Plug-HH
29:1	237-42	1	O-Ring
30	95-6448	1	Spacer
31	63-8410	1	Washer
32	323-12	1	Screw-HH
33	114-0094	1	Hold Down-Tank
34	3234-42	3	Screw-HHF
35	104-8301	2	Nut-HF, NI
36	114-0939-03	1	Cover-Tank, HYD
37	93-6686	1	Decal-Oil, HYD
38	46-6560	1	Bushing
39	46-6550	1	Fitting-Elbow, 90 DEG
41	105-4886	2	Nut-Tinnerman
42	130-2583-01	1	Support-Tank, Hydraulic
43	105-2812	1	Dipstick
44	131-2213-03	1	Plate-Drain, Case
45	56-7971	2	Clamp-Tube

Hydraulic Cutting Circuit Assembly

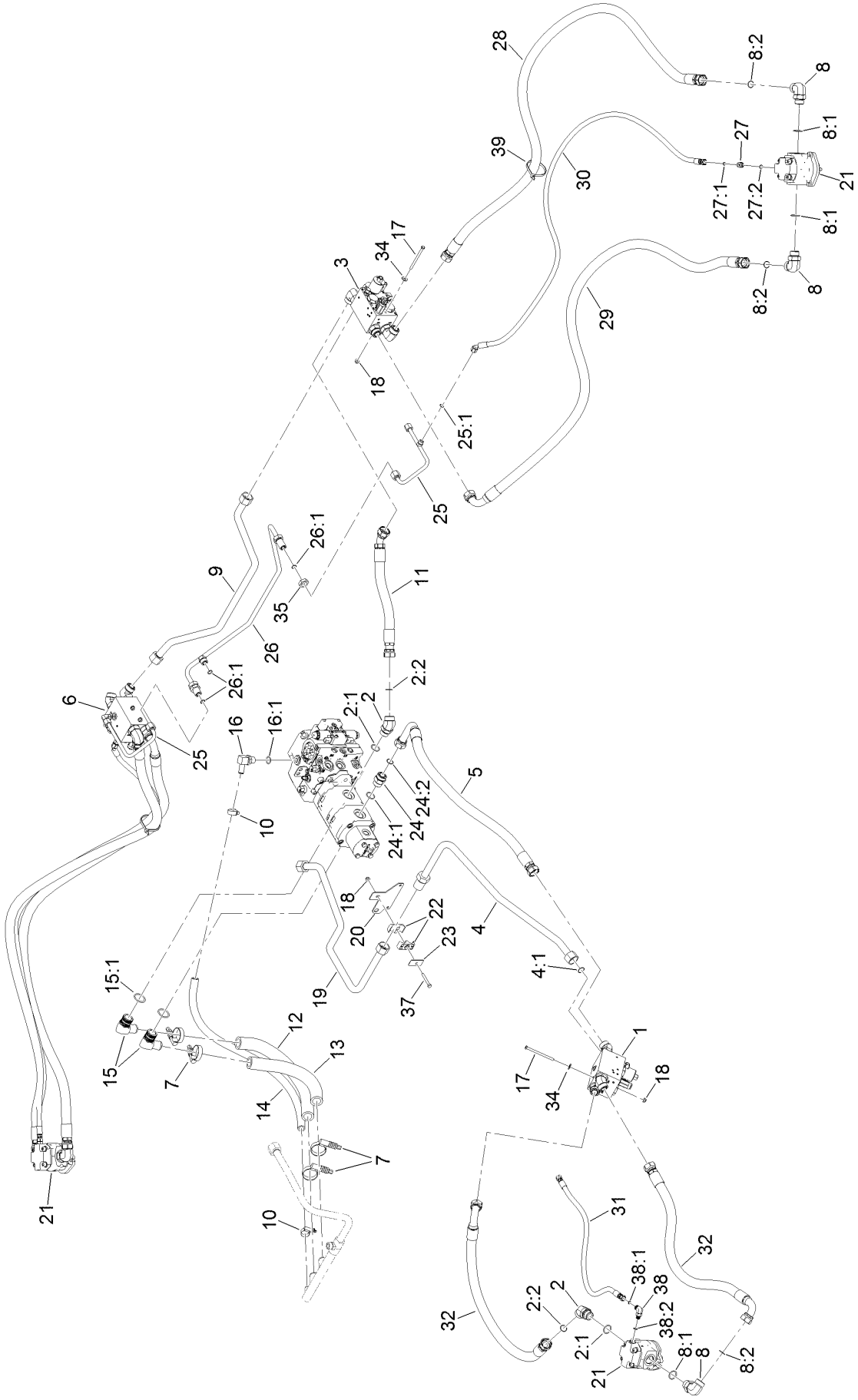

Hydraulic Cutting Circuit Assembly (continued)

Ref.	Part Number	Qty.	Description
1		1	Center Deck Manifold ASM ●
2	104-3509	2	Fitting-HYD, 45 DEG
2:1	237-146	1	O-Ring
2:2	340-65	1	O-Ring
3		1	LH Deck Manifold ASM ●
4	130-2549	1	Hydraulic Tube ASM
4:1	340-65	1	O-Ring
5	125-5346	1	Hydraulic Hose ASM
6		1	RH Deck Manifold ASM ●
7	121-7536	4	Clamp-Torque, Constant
8	340-129	5	Fitting-Elbow, 90 DEG
8:1	237-146	1	O-Ring
8:2	340-65	1	O-Ring
9	125-5325	1	Hydraulic Tube ASM
10	132-1383	2	Clamp-Belville Sprg
11	125-5328	1	Hydraulic Hose ASM
12	127-3466	1	Hose-Hydraulic
13	127-3467	1	Hose-Hydraulic
14	127-3468	1	Hose-Hydraulic
15	92-7526	2	Fitting-HYD 90 Spcl
15:1	237-101	1	O-Ring
16	353-987	1	Fitting-Elbow, 90
16:1	237-81	1	O-Ring
17	130-9133	6	Screw-HH
18	104-8300	7	Nut-HF, NI
19	132-1374	1	Hydraulic Tube ASM
20	132-1377-01	1	Bracket-Hydraulic
21	125-5392	3	Hydraulic Motor ASM
22	56-7974	2	Clamp-Tube
23	69-9761	1	Plate-Cover
24	104-3797	1	Fitting-Straight
24:1	237-146	1	O-Ring
24:2	340-65	1	O-Ring
25	125-5326	2	Hydraulic Tube ASM
25:1	237-22	1	O-Ring
26	125-5356	1	Hydraulic Tube ASM
26:1	237-65	3	O-Ring
27	340-2	2	Fitting-Straight
27:1	237-22	1	O-Ring
27:2	237-42	1	O-Ring
28	130-9152	2	Hydraulic Hose ASM
29	130-9153	2	Hydraulic Hose ASM
30	130-9154	2	Hydraulic Hose ASM
31	132-1389	1	Hydraulic Hose ASM
32	130-9156	2	Hydraulic Hose ASM
34	3256-56	6	Washer-Flat
35	340-74	2	Nut-Lock, Bulkhead
37	322-12	1	Screw-HH
38	340-77	1	Fitting-Elbow, 90 DEG
38:1	237-22	1	O-Ring
38:2	237-42	1	O-Ring
39	3334-945	2	Tie-Cable

● Not serviced separately

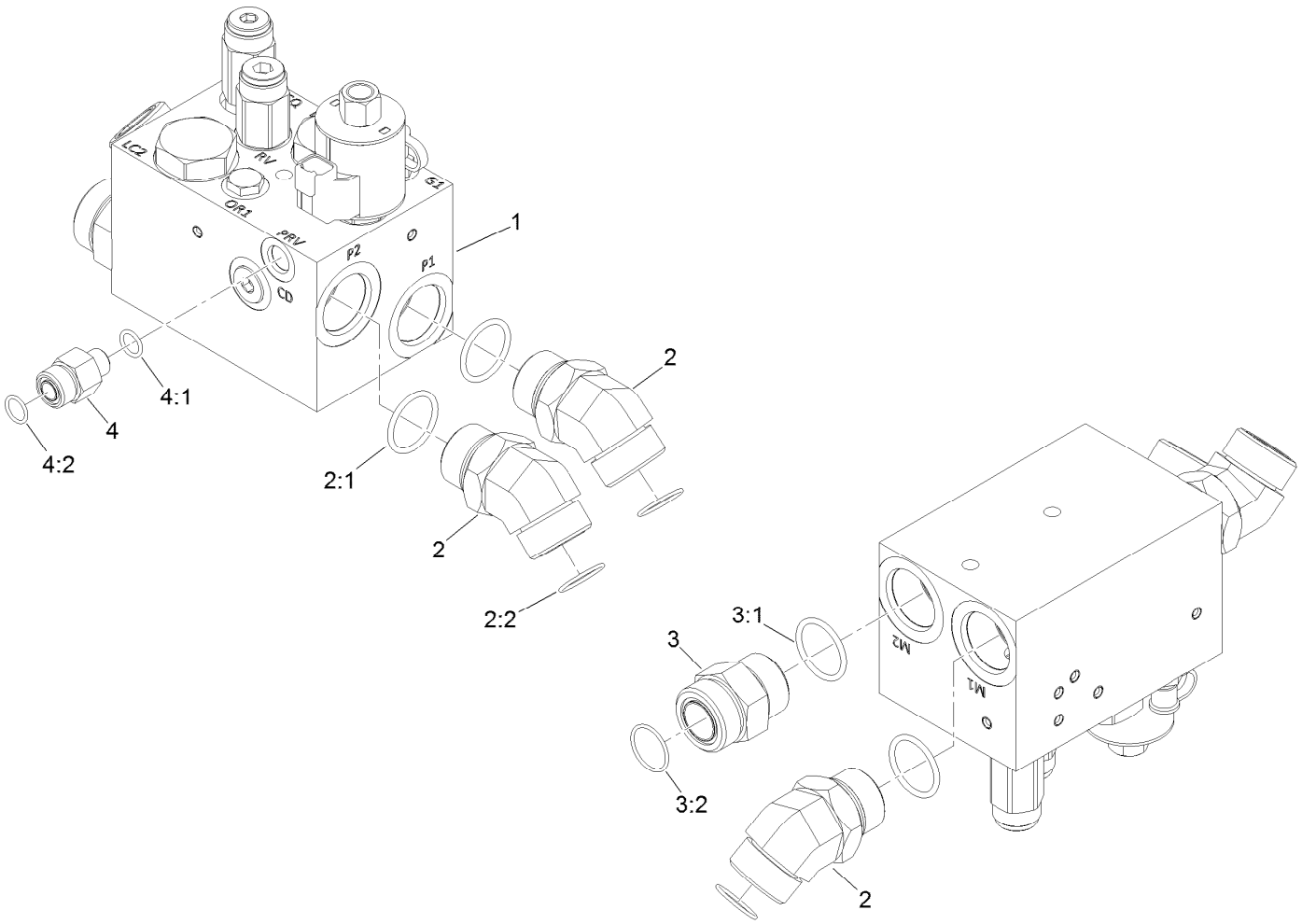

Center Cutting Deck Drive Valve Assembly

Ref.	*Part Number*	*Qty.*	*Description*
1	132-1394	1	Center Deck Manifold ASM
2	104-3509	3	Fitting-HYD, 45 DEG
2:1	237-146	1	O-Ring
2:2	340-65	1	O-Ring
3	104-3797	1	Fitting-Straight
3:1	237-146	1	O-Ring
3:2	340-65	1	O-Ring
4	340-5	1	Fitting-Straight
4:1	237-42	1	O-Ring
4:2	237-30	1	O-Ring

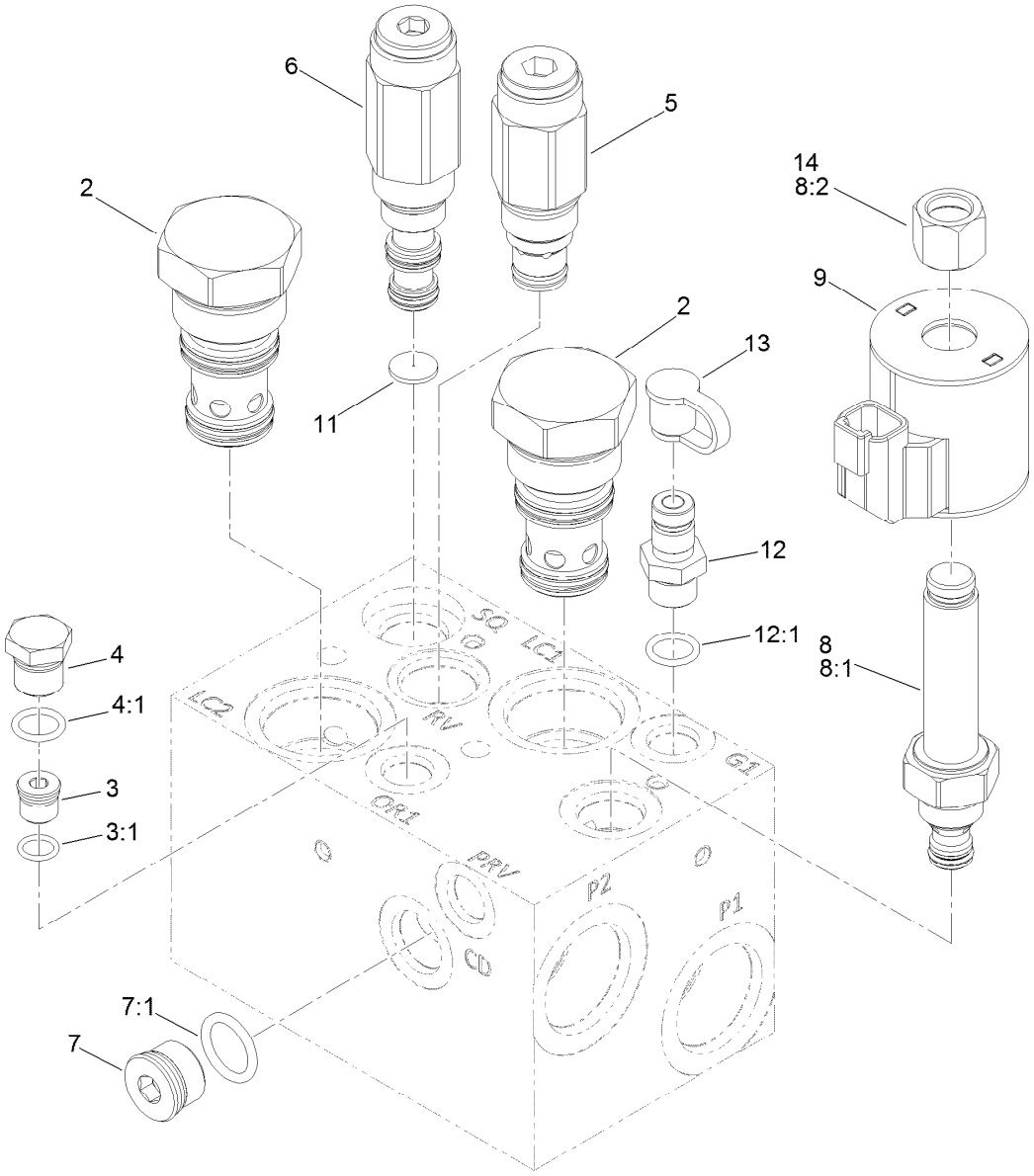

Hydraulic Manifold Assembly No. 132-1394

Ref.	Part Number	Qty.	Description
2	132-4896	2	Element-Logic
3	353-990	1	Plug ASM
3:1	237-78	1	O-Ring
4	353-508	1	Plug-HH
4:1	237-42	1	O-Ring
5	132-4894	1	Valve-Relief, Poppet
6	132-4893	1	Valve-Sequence, 110 PSI
7	353-988	1	Plug-Hex
7:1	237-79	1	O-Ring

Ref.	Part Number	Qty.	Description
8	117-0227	1	Valve-Relief, Proportional
8:1	105-9156	1	Seal Kit
8:2	130-8180	1	Nut-Coil, 9/16-24 Unef-2B
9	119-4619	1	Coil-Solenoid
11	132-4891	1	Disc-Orifice
12	59-7410	1	Fitting-Diagnostic
12:1	237-42	1	O-Ring
13	354-79	1	Cap-Dust
14	130-8180	1	Nut-Coil, 9/16-24 Unef-2B

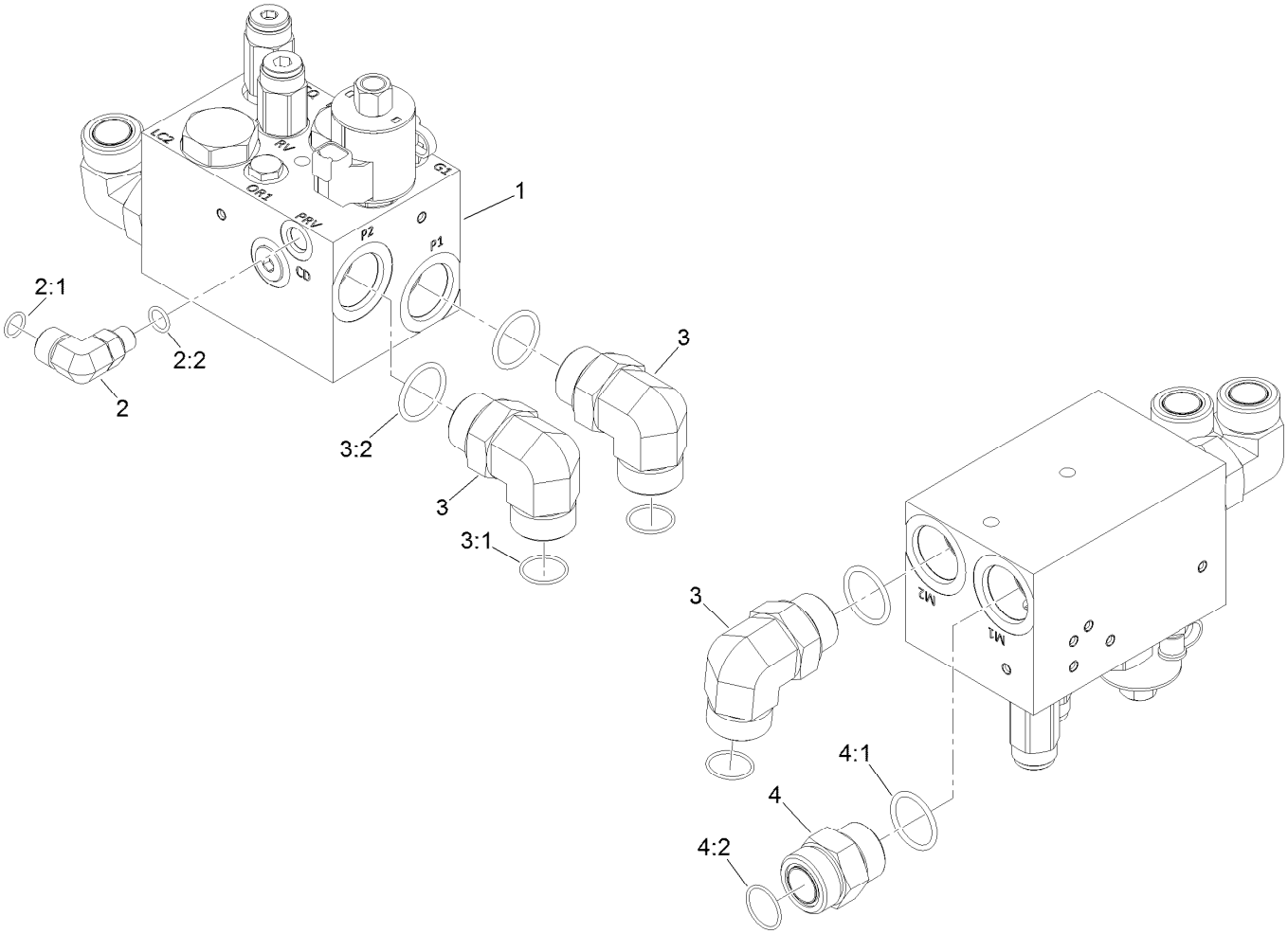

LH Cutting Deck Drive Valve Assembly

Ref.	*Part Number*	*Qty.*	*Description*
1	132-1395	1	LH Deck Manifold ASM
2	340-99	1	Fitting-HYD, 90 DEG
2:1	237-30	1	O-Ring
2:2	237-42	1	O-Ring
3	340-129	3	Fitting-Elbow, 90 DEG
3:1	237-146	1	O-Ring
3:2	340-65	1	O-Ring
4	104-3797	1	Fitting-Straight
4:1	237-146	1	O-Ring
4:2	340-65	1	O-Ring

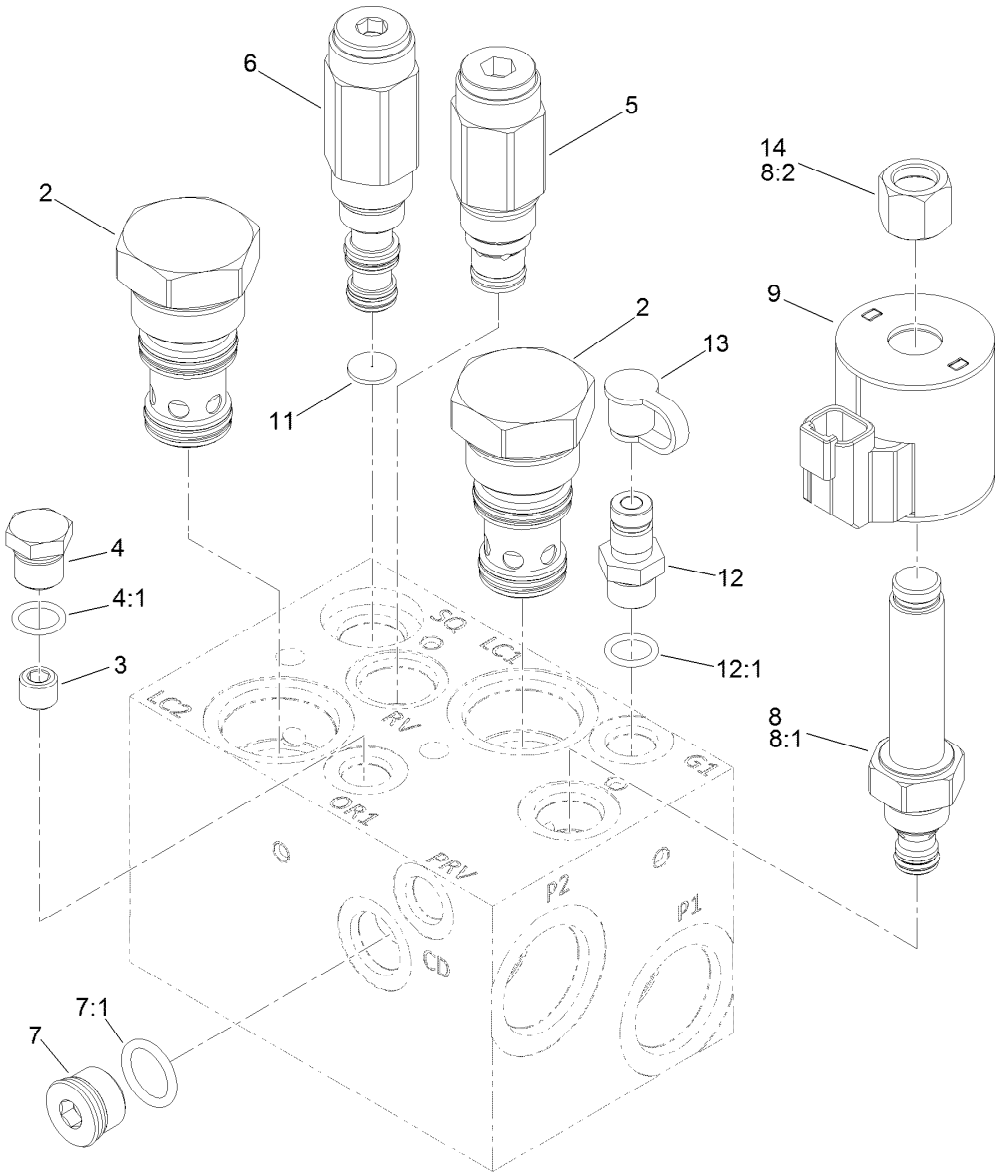

Hydraulic Manifold Assembly No. 132-1395

Ref.	Part Number	Qty.	Description
2	132-4896	2	Element-Logic
3	132-4895	1	Orifice
4	353-508	1	Plug-HH
4:1	237-42	1	O-Ring
5	132-4894	1	Valve-Relief, Poppet
6	132-4893	1	Valve-Sequence, 110 PSI
7	353-988	1	Plug-Hex
7:1	237-79	1	O-Ring
8	117-0227	1	Valve-Relief, Proportional

Ref.	Part Number	Qty.	Description
8:1	105-9156	1	Seal Kit
8:2	130-8180	1	Nut-Coil (9/16-24 Unef-2B)
9	119-4619	1	Coil-Solenoid
11	132-4891	1	Disc-Orifice
12	59-7410	1	Fitting-Diagnostic
12:1	237-42	1	O-Ring
13	354-79	1	Cap-Dust
14	130-8180	1	Nut-Coil (9/16-24 Unef-2B)

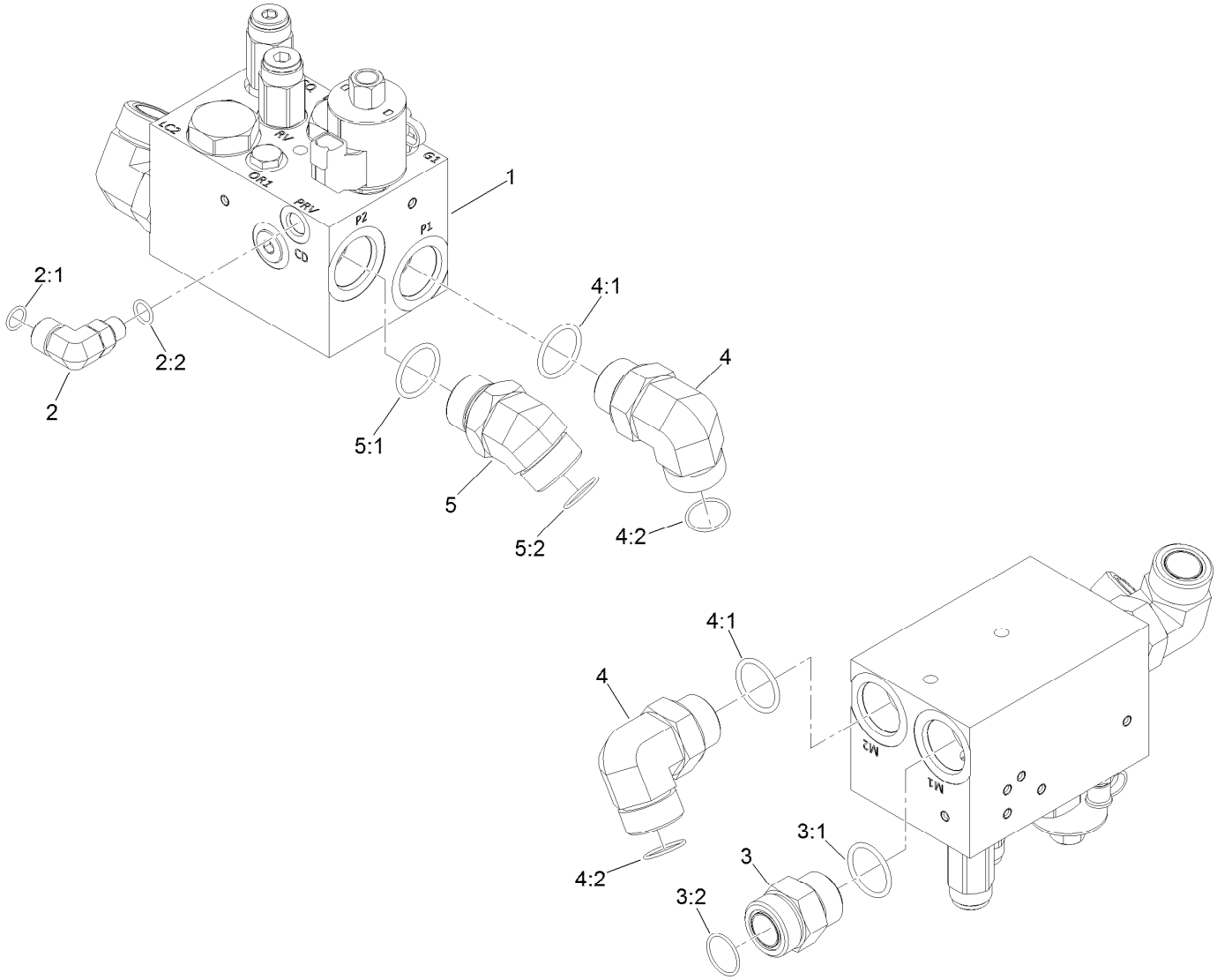

RH Cutting Deck Drive Valve Assembly

Ref.	*Part Number*	*Qty.*	*Description*
1	132-1396	1	RH Deck Manifold ASM
2	340-99	1	Fitting-HYD, 90 DEG
2:1	237-30	1	O-Ring
2:2	237-42	1	O-Ring
3	104-3797	1	Fitting-Straight
3:1	237-146	1	O-Ring
3:2	340-65	1	O-Ring
4	340-129	2	Fitting-Elbow, 90 DEG
4:1	237-146	1	O-Ring
4:2	340-65	1	O-Ring
5	104-3509	1	Fitting-HYD, 45 DEG
5:1	237-146	1	O-Ring
5:2	340-65	1	O-Ring

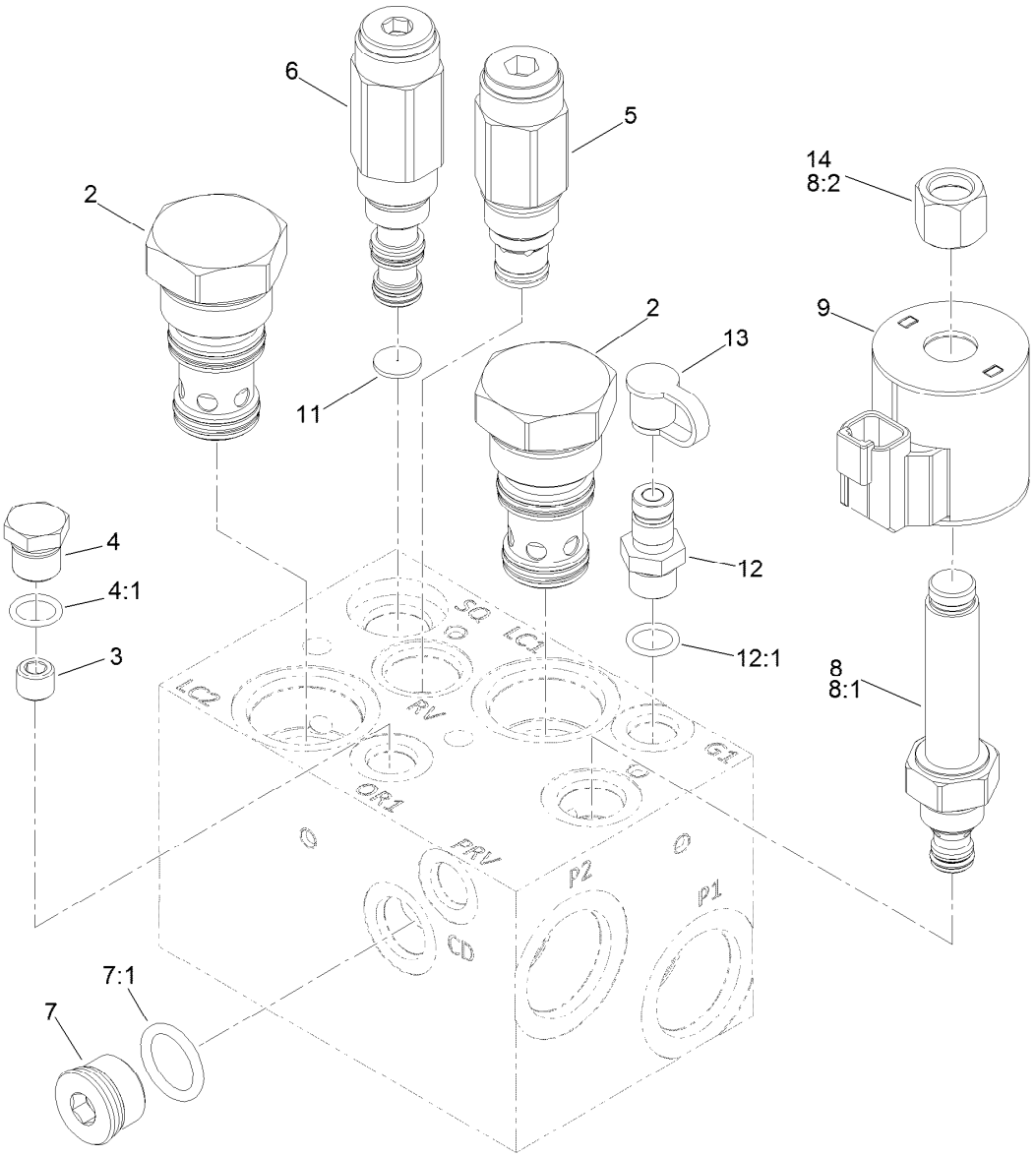

Hydraulic Manifold Assembly No. 132-1396

Ref.	Part Number	Qty.	Description
2	132-4896	2	Element-Logic
3	132-4895	1	Orifice
4	353-508	1	Plug-HH
4:1	237-42	1	O-Ring
5	132-4894	1	Valve-Relief, Poppet
6	132-4893	1	Valve-Sequence, 110 PSI
7	353-988	1	Plug-Hex
7:1	237-79	1	O-Ring
8	117-0227	1	Valve-Relief, Proportional

Ref.	Part Number	Qty.	Description
8:1	105-9156	1	Seal Kit
8:2	130-8180	1	Nut-Coil (9/16-24 Unef-2B)
9	119-4619	1	Coil-Solenoid
11	132-4891	1	Disc-Orifice
12	59-7410	1	Fitting-Diagnostic
12:1	237-42	1	O-Ring
13	354-79	1	Cap-Dust
14	130-8180	1	Nut-Coil (9/16-24 Unef-2B)

Hydraulic Motor Assembly No. 125-5392

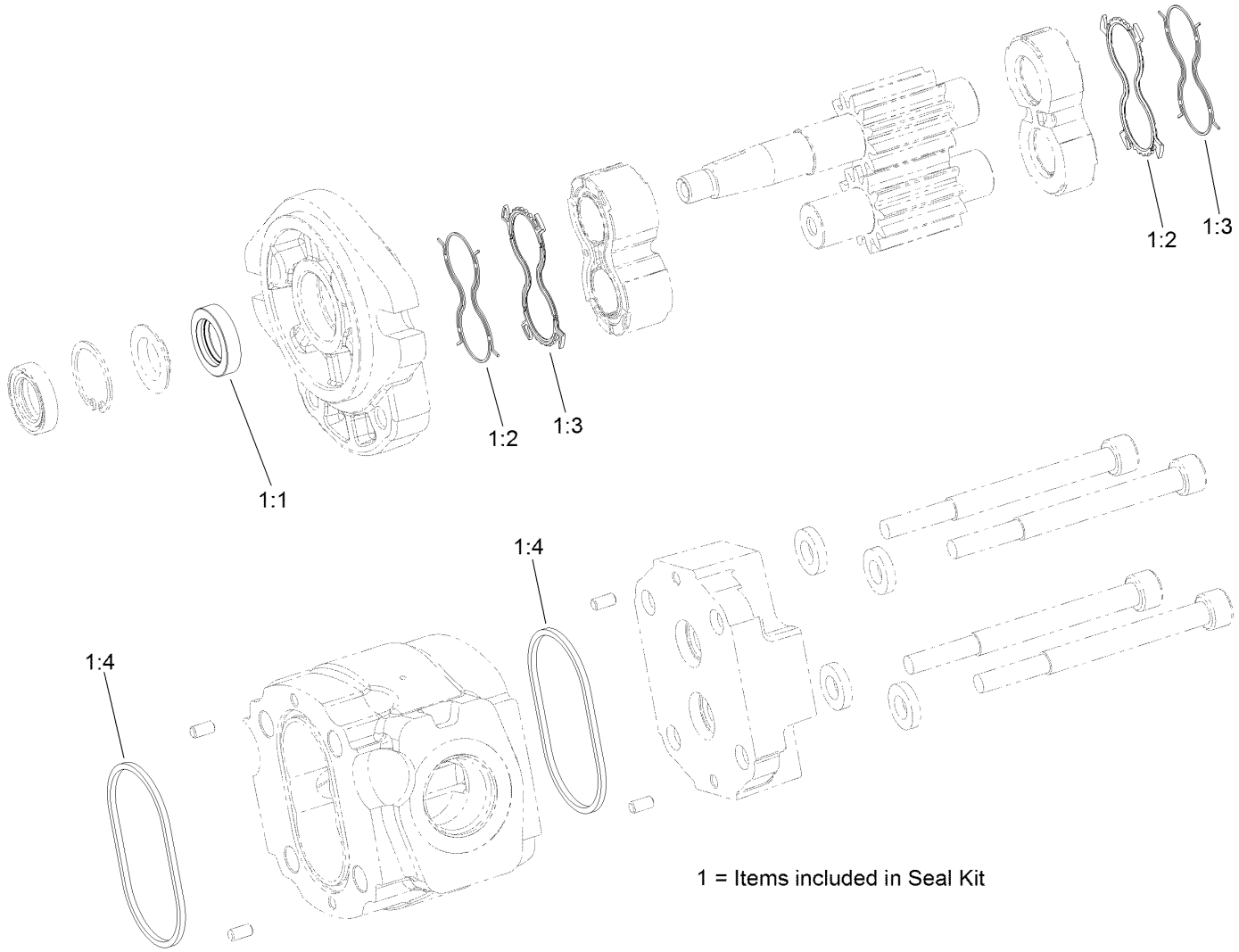

1 = Items included in Seal Kit

Hydraulic Motor Assembly No. 125-5392 (continued)

Ref.	Part Number	Qty.	Description
1	115-4110	1	Seal Kit
1:1		2	Seal-Shaft ●
1:2		2	Seal-Plate, Balancing ●
1:3		2	Seal-Anti Extrusion ●
1:4		2	O-Ring (Housing) ●

● Not serviced separately

Hydraulic Steering/Lift Circuit Assembly

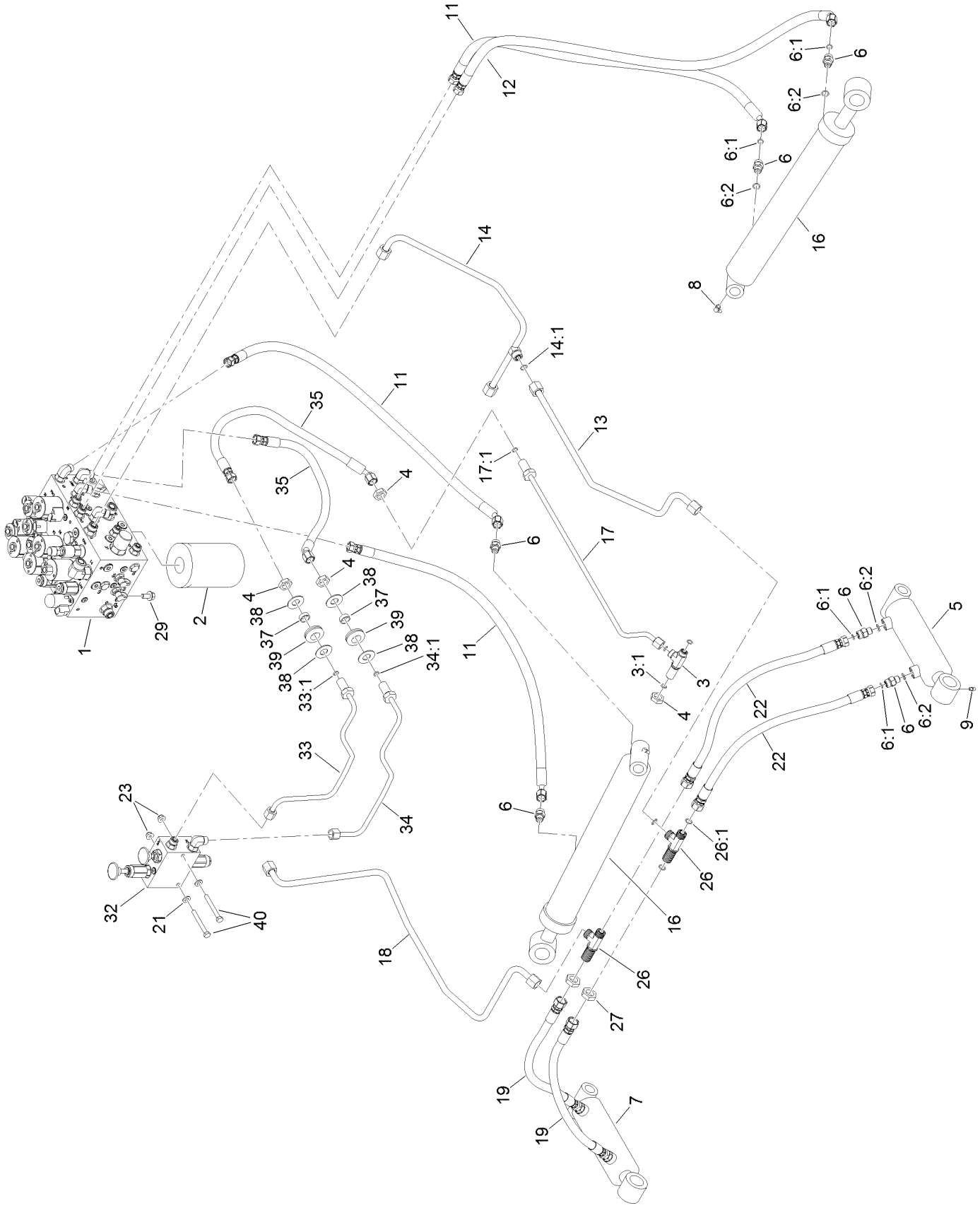

Hydraulic Steering/Lift Circuit Assembly (continued)

Ref.	Part Number	Qty.	Description
1	130-2433	1	Steering/Lift Valve ASM
2	75-1310	1	Filter-HYD
3	340-68	1	Fitting-Tee, Bulkhead
3:1	237-22	3	O-Ring
4	340-70	4	Nut-Lock
5	114-4831	1	LH Lift Cylinder ASM
6	340-2	8	Fitting-Straight
6:1	237-22	1	O-Ring
6:2	237-42	1	O-Ring
7	114-4830	1	RH Lift Cylinder ASM
8	302-60	2	Fitting-Grease
9	302-5	4	Fitting-Grease
11	131-2216	3	Hydraulic Hose ASM
12	131-2217	1	Hydraulic Hose ASM
13	130-9035	1	Hydraulic Tube ASM
14	131-2374	1	Hydraulic Tube ASM
14:1	237-30	1	O-Ring
16	114-5685	2	HYD Cylinder ASM
17	131-2371	1	Hydraulic Tube ASM
17:1	237-22	1	O-Ring
18	130-9038	1	Hydraulic Tube ASM
19	131-2298	2	Hydraulic Hose ASM
21	3256-23	2	Washer-Plain
22	131-2299	2	Hydraulic Hose ASM
23	104-8300	2	Nut-HF, NI
26	340-121	2	Fitting-Tee
26:1	237-30	3	O-Ring
27	340-127	2	Nut-Bulkhead
29	3234-12	4	Screw-HHF
32	132-1378	1	Manual Park Brake Manifold ASM
33	132-1380	1	Hydraulic Tube ASM
33:1	237-22	1	O-Ring
34	132-1381	1	Hydraulic Tube ASM
34:1	237-22	1	O-Ring
35	132-1382	2	Hydraulic Hose ASM
37	69-8970	2	Spacer
38	69-8940	4	Washer
39	240-4	2	Grommet-Rubber
40	322-13	2	Screw-HH

Steering/Lift Valve Assembly No. 130-2433

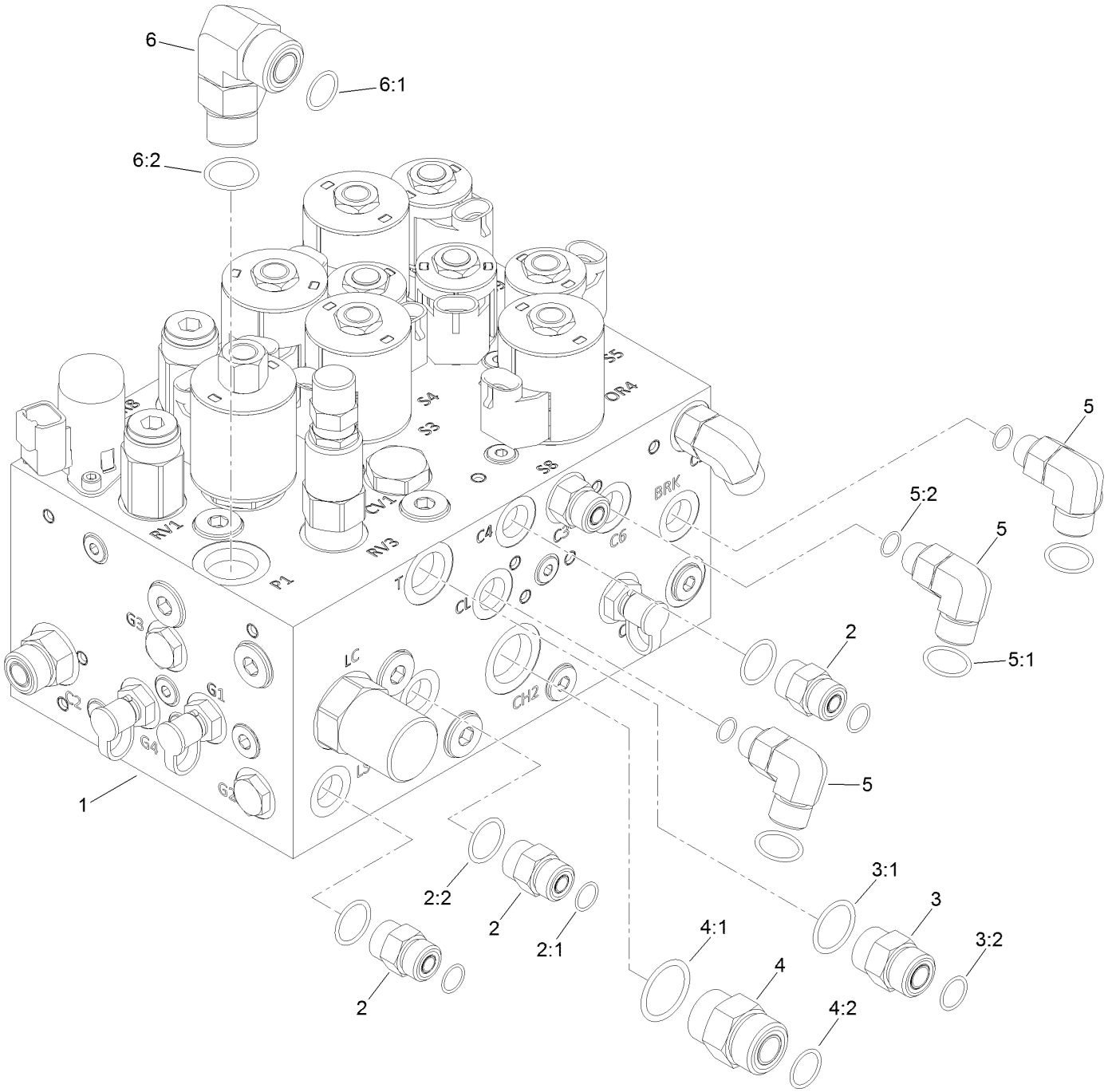

Steering/Lift Valve Assembly No. 130-2433 (continued)

Ref.	Part Number	Qty.	Description
1	132-1398	1	Steering/Lift Manifold ASM
2	340-2	3	Fitting-Straight
2:1	237-22	1	O-Ring
2:2	237-42	1	O-Ring
3	340-4	1	Fitting-Straight
3:1	237-30	1	O-Ring
3:2	237-79	1	O-Ring
4	340-7	1	Fitting-Straight
4:1	237-65	1	O-Ring
4:2	237-80	1	O-Ring
5	340-77	3	Fitting-Elbow, 90 DEG
5:1	237-22	1	O-Ring
5:2	237-42	1	O-Ring
6	340-17	1	Fitting-Elbow, 90 DEG
6:1	237-65	1	O-Ring
6:2	237-80	1	O-Ring

Hydraulic Steering/Lift Manifold
Assembly No. 132-1398

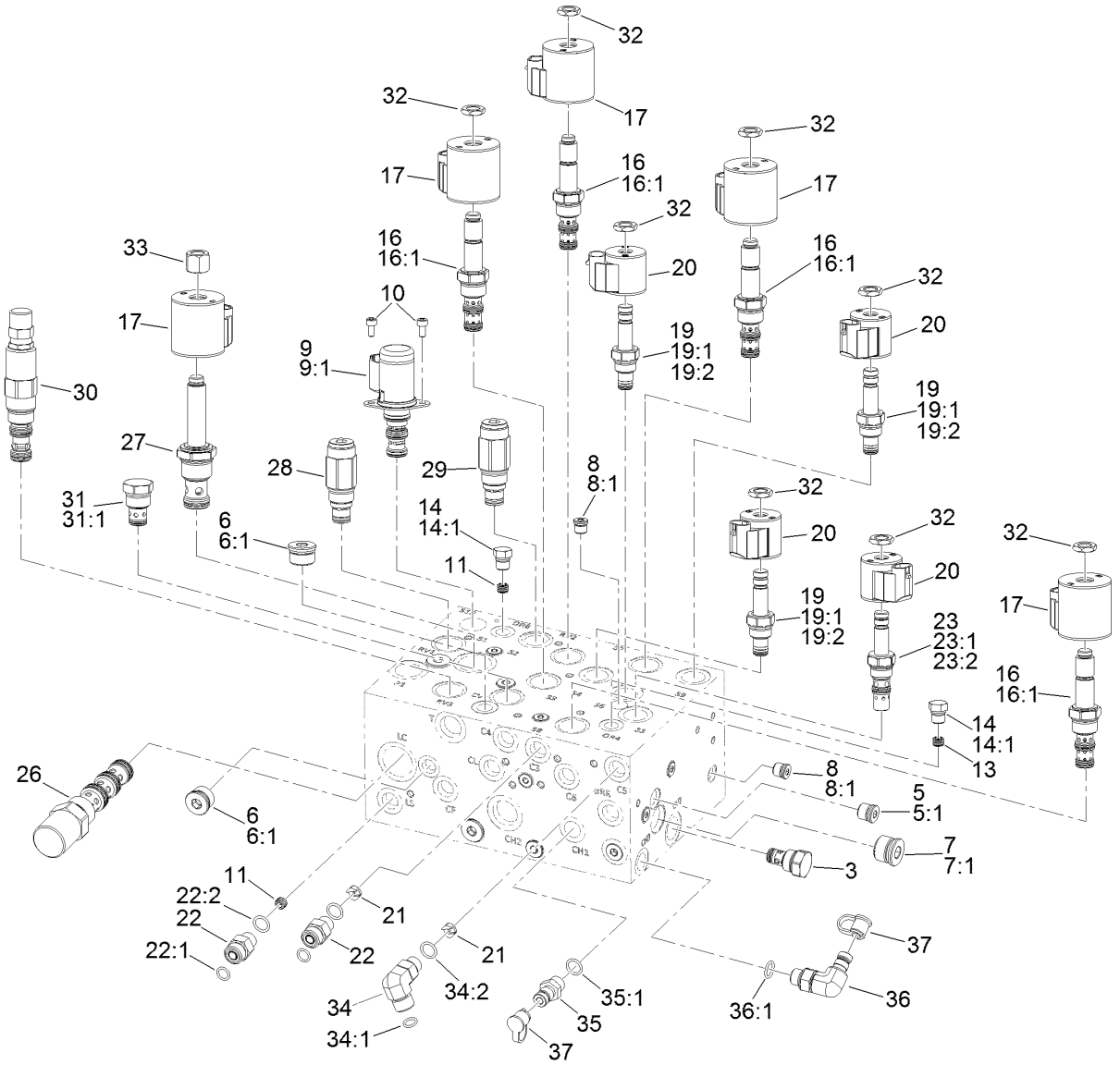

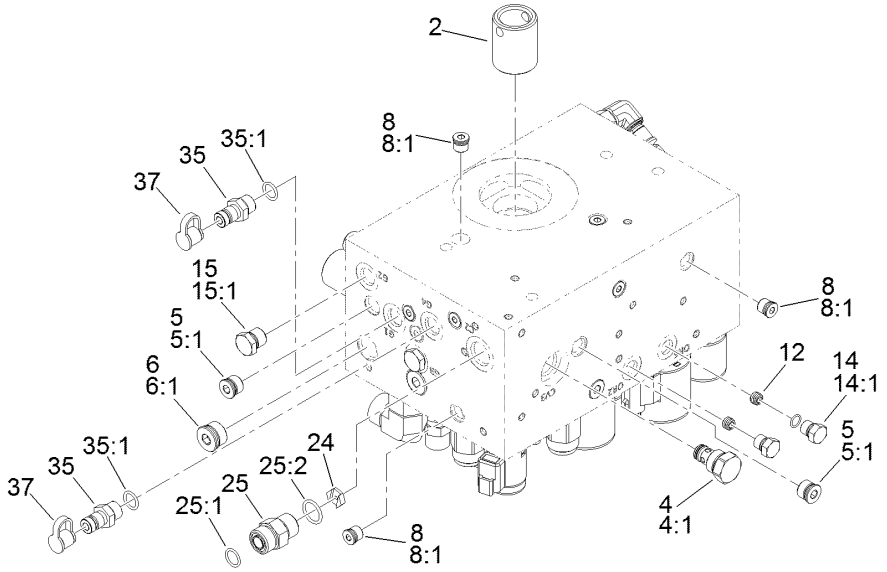

Hydraulic Steering/Lift Manifold Assembly No. 132-1398 (continued)

Ref.	Part Number	Qty.	Description
2	125-7551	1	Nipple-Filter
3	132-4916	1	Valve-Check
4	105-9321	1	Check Valve ASM
4:1	105-9156	1	Seal Kit
5	353-989	7	Plug-Hex, Hollow
5:1	237-42	1	O-Ring
6	353-988	6	Plug-Hex
6:1	237-79	1	O-Ring
7	354-70	1	Plug-Hex, Hollow
7:1	237-80	1	O-Ring
8	353-990	15	Plug ASM
8:1	237-78	1	O-Ring
9	125-7554	1	Valve-Solenoid
9:1	125-7561	1	Seal Kit ●
10	132-4908	2	Screw-Cap, Soc HD
11	110-5973	2	Orifice-0.030
12	110-8887	2	Plug-Orifice (0.055)
13	130-1674	1	Orifice-Control, Flow
14	353-512	4	Plug
14:1	237-78	1	O-Ring
15	353-508	2	Plug-HH
15:1	237-42	1	O-Ring
16	125-7556	4	Solenoid Valve ASM
16:1	107-7813	1	Seal Kit
17	110-6344	5	Coil-12V, DC
19	112-9206	3	Solenoid Valve ASM
19:1	105-9156	1	Seal Kit
19:2	110-2634	1	Nut-Coil
20	110-0497	4	Coil-Solenoid
21	132-4917	2	Orifice-Check, 0.088 DIA
22	340-2	1	Fitting-Straight
22:1	237-22	1	O-Ring
22:2	237-42	1	O-Ring
23	115-5405	1	Solenoid Valve ASM
23:1	115-5413	1	Seal Kit
23:2	110-2634	1	Nut-Coil
24	132-4918	1	Orifice-Control, Flow
25	340-4	1	Fitting-Straight
25:1	237-30	1	O-Ring
25:2	237-79	1	O-Ring
26	132-4919	1	Compensator-Pressure, 80 PSI
27	132-4920	1	Valve-Solenoid
28	132-4921	1	Valve-Relief, Poppet Type
29	132-4922	1	Valve-Relief, Poppet Type
30	132-4923	1	Vented Logic Element
31	110-8881	1	Valve-Check
31:1	105-9159	1	Seal Kit ●
32	110-2634	8	Nut-Coil
33	130-8181	1	Nut-Coil (1/2-20 Unf-2B)
34	340-77	1	Fitting-Elbow, 90 DEG
34:1	237-22	1	O-Ring
34:2	237-42	1	O-Ring
35	59-7410	3	Fitting-Diagnostic
35:1	237-42	1	O-Ring
36	115-9148	1	Fitting-Elbow-90
36:1	237-42	1	O-Ring
37	354-79	4	Cap-Dust

● Not illustrated

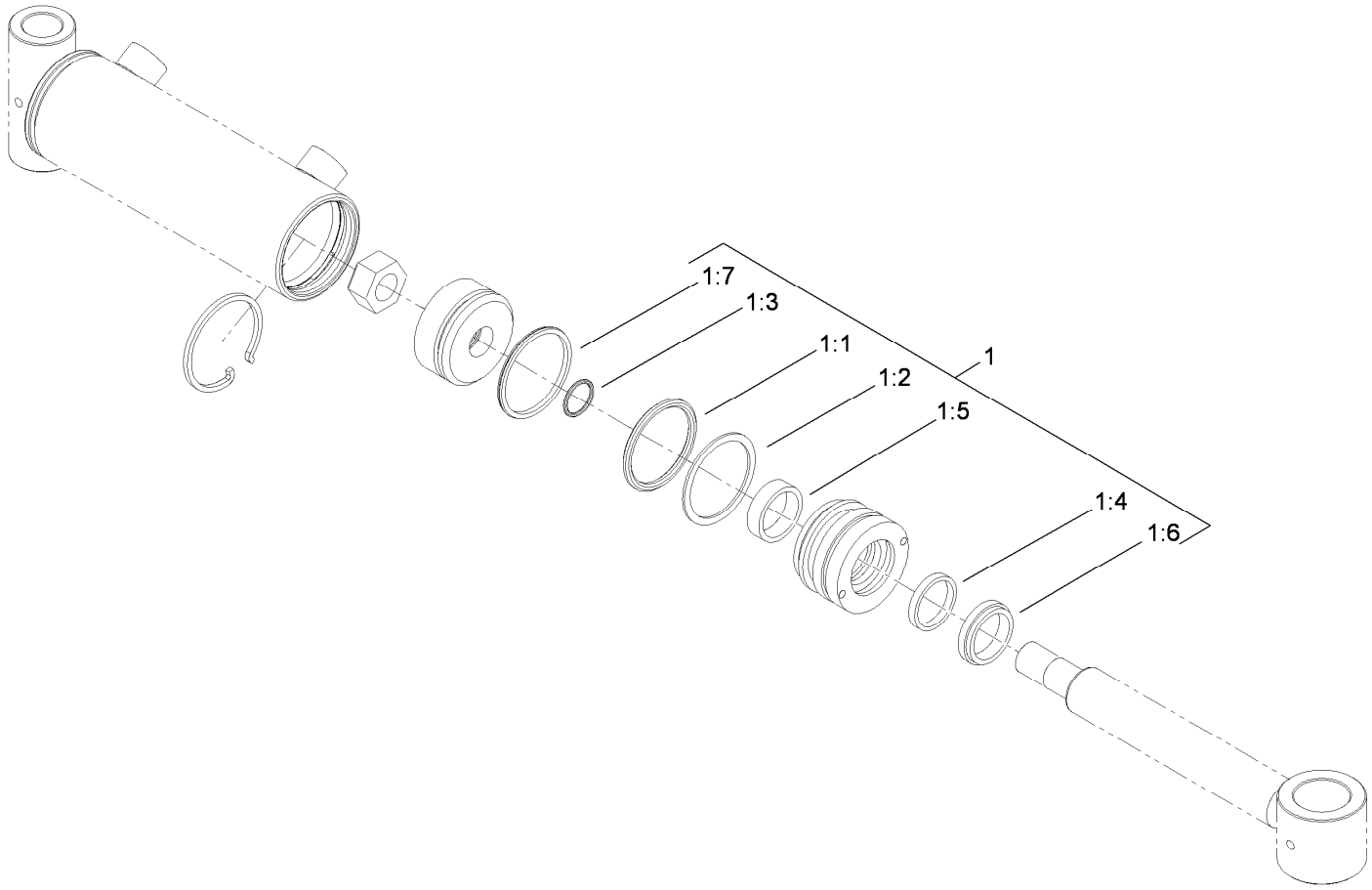

Hydraulic Cylinder Assembly No. 114-4831

Ref.	*Part Number*	*Qty.*	*Description*
1	114-5611	1	Seal Kit
1:1		1	O-Ring ●
1:2		1	Backup ●
1:3		1	Seal-Bp ●
1:4		1	Seal-Bs ●
1:5		1	Ring-Wear ●
1:6		1	Seal-Dust ●
1:7		1	O-Ring ●

● Not serviced separately

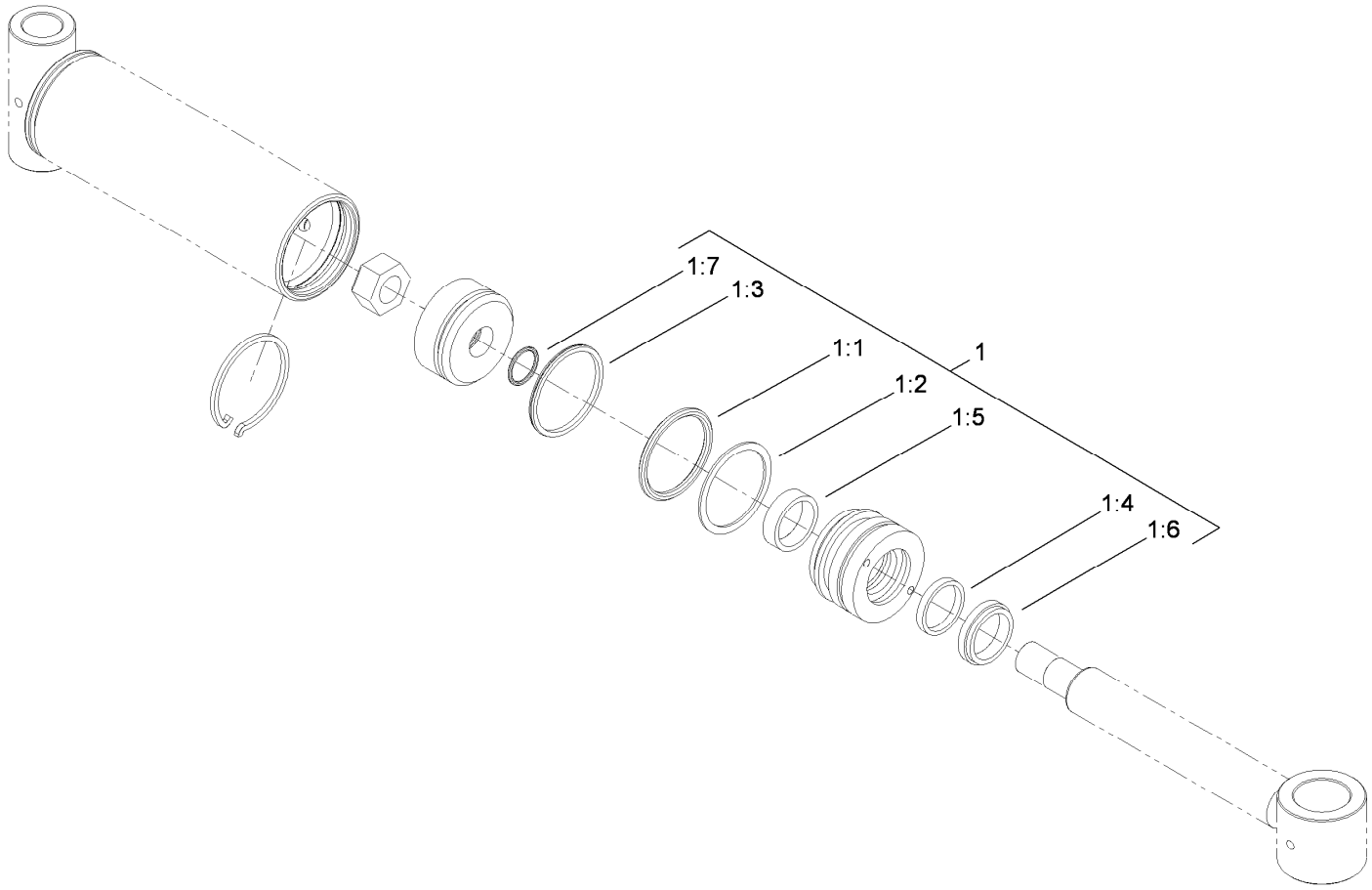

Hydraulic Cylinder Assembly No. 114-4830

Ref.	*Part Number*	*Qty.*	*Description*
1	114-5611	1	Seal Kit
1:1		1	O-Ring ●
1:2		1	Backup ●
1:3		1	Seal-Bp ●
1:4		1	Seal-Bs ●
1:5		1	Ring-Wear ●
1:6		1	Seal-Dust ●
1:7		1	O-Ring ●

● Not serviced separately

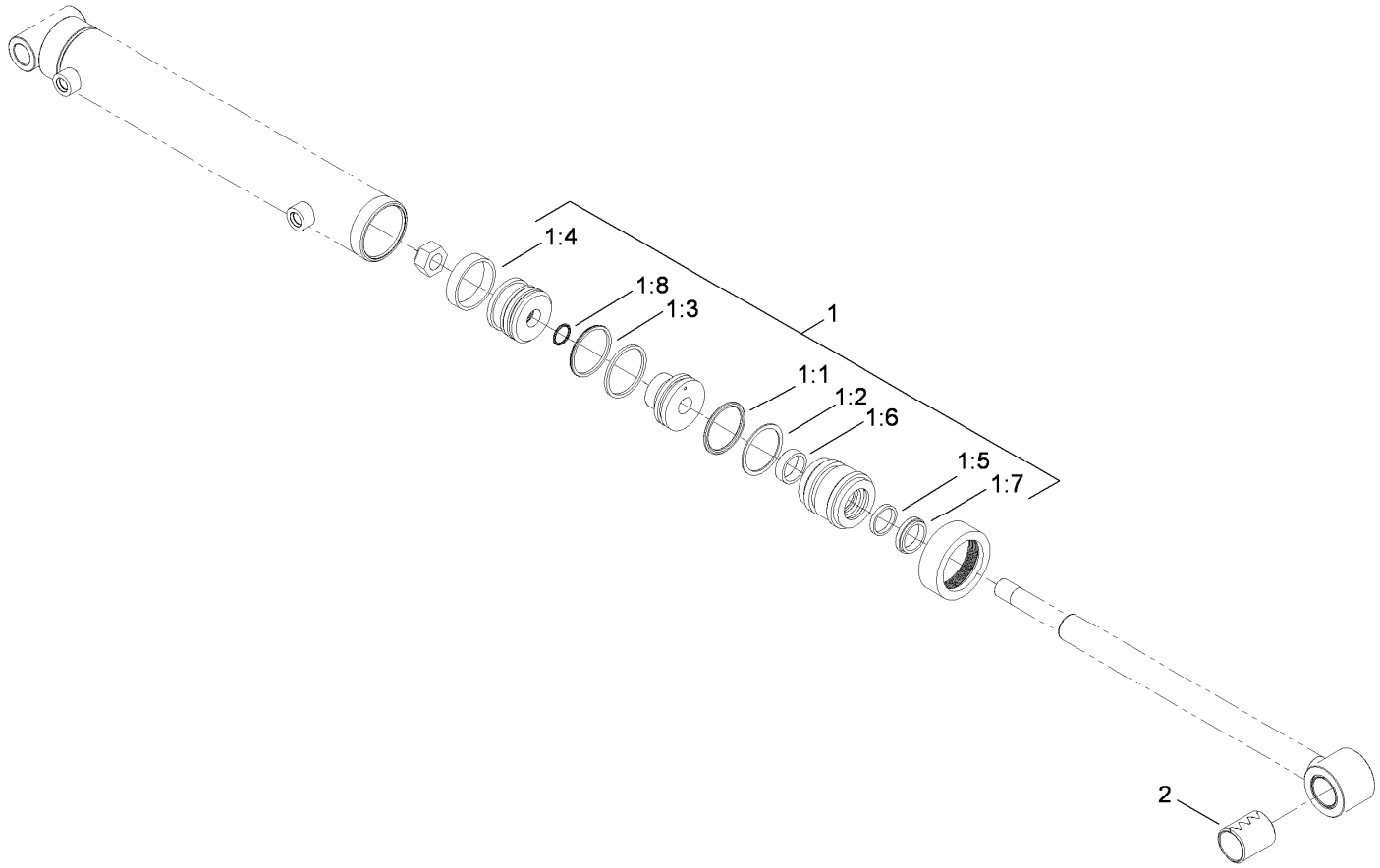

Hydraulic Cylinder Assembly No. 114-5685

Ref.	*Part Number*	*Qty.*	*Description*
1	114-5612	1	Seal Kit
1:1		1	O-Ring ●
1:2		1	Backup ●
1:3		1	Seal-Bp ●
1:4		1	Ring-Wear ●
1:5		1	Seal-Bs ●
1:6		1	Ring-Wear ●
1:7		1	Seal-Dust ●
1:8		1	O-Ring ●
2	117-9407	1	Bushing-Connex

● Not serviced separately

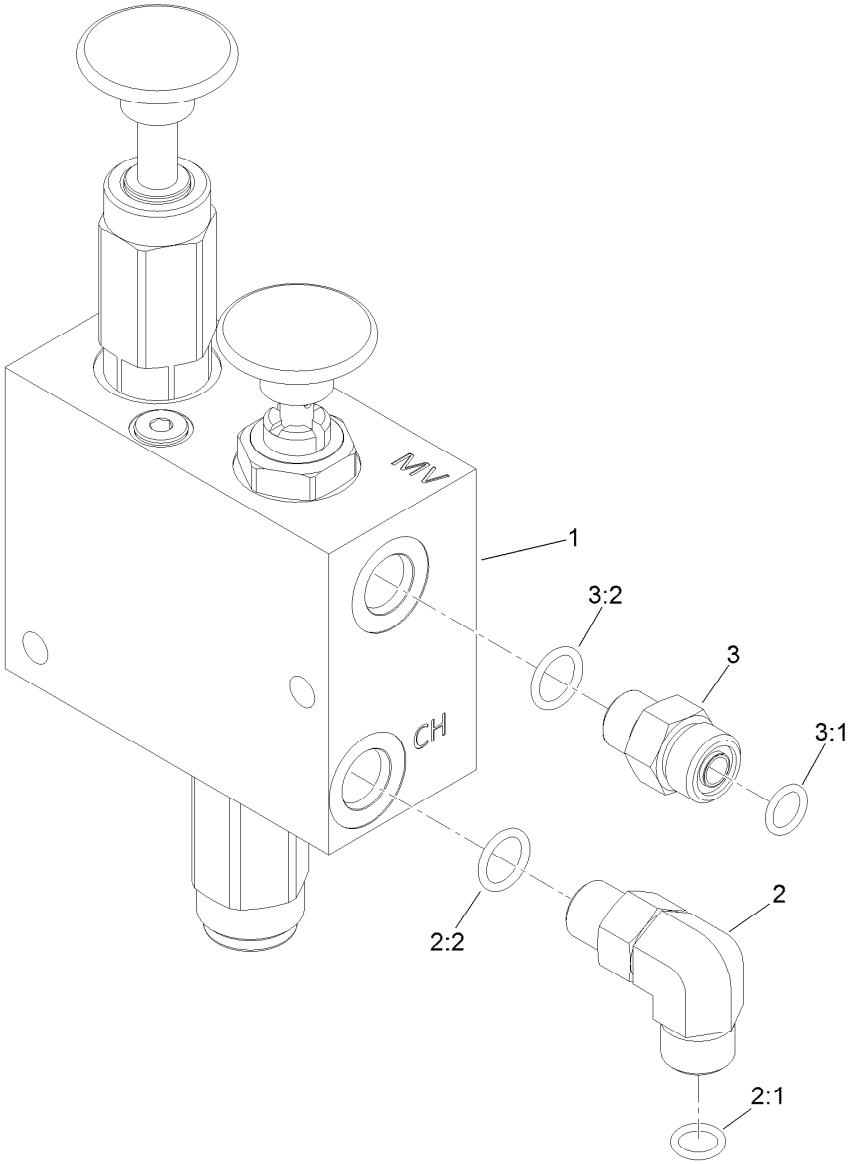

Manual Parking Brake Manifold Assembly No. 132-1378

Ref.	*Part Number*	*Qty.*	*Description*
1	132-1399	1	Manual Park Brake Manifold ASM
2	340-77	1	Fitting-Elbow, 90 DEG
2:1	237-22	1	O-Ring
2:2	237-42	1	O-Ring
3	340-2	1	Fitting-Straight
3:1	237-22	1	O-Ring
3:2	237-42	1	O-Ring

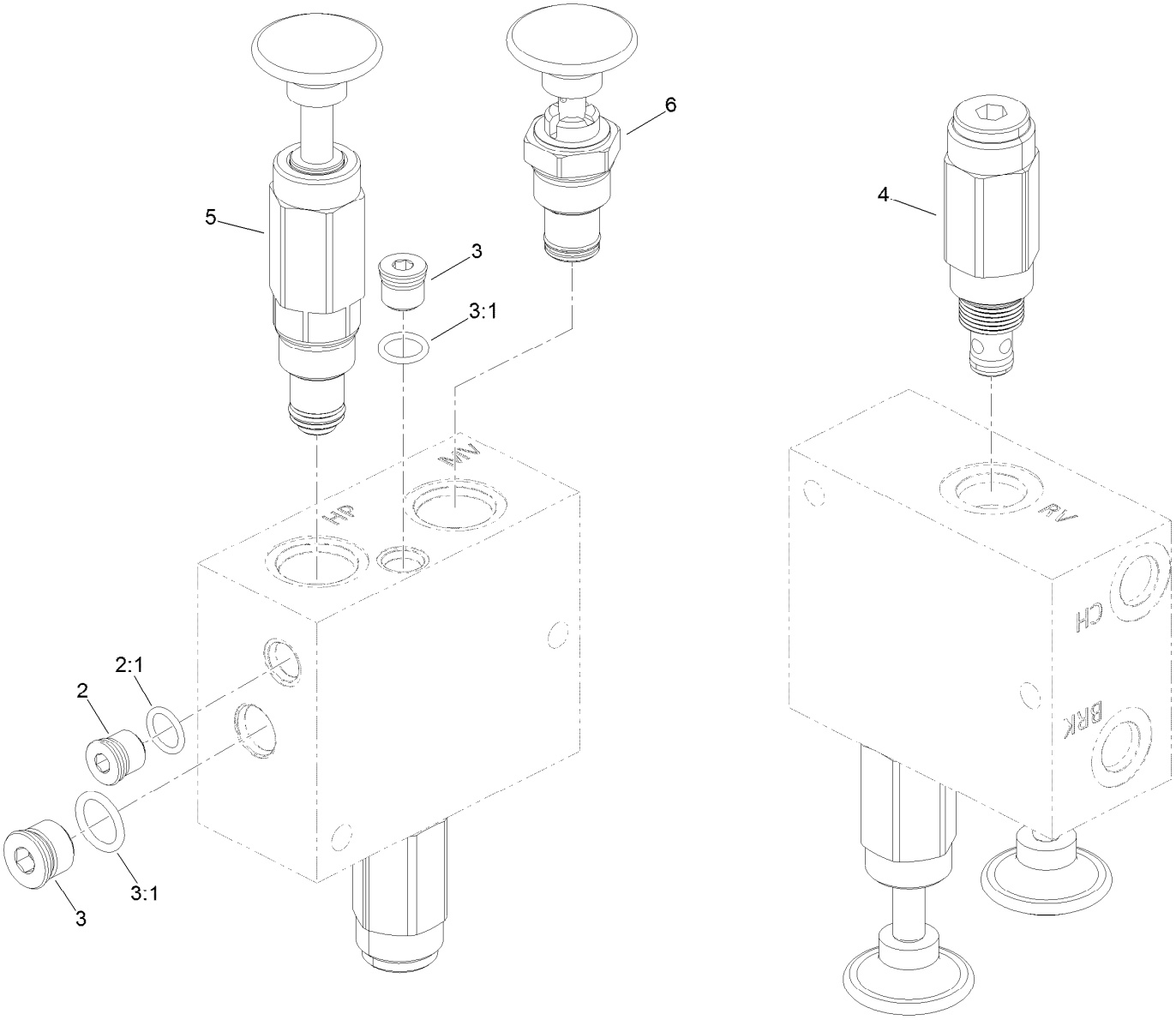

Hydraulic Parking Brake Manifold Assembly No. 132-1399

Ref.	*Part Number*	*Qty.*	*Description*
2	353-989	1	Plug-Hex, Hollow
2:1	237-42	1	O-Ring
3	353-990	2	Plug ASM
3:1	237-78	1	O-Ring
4	132-4905	1	Valve-Relief
5	132-4904	1	Pump-Hand
6	132-4903	1	Valve-2 Way, Manual

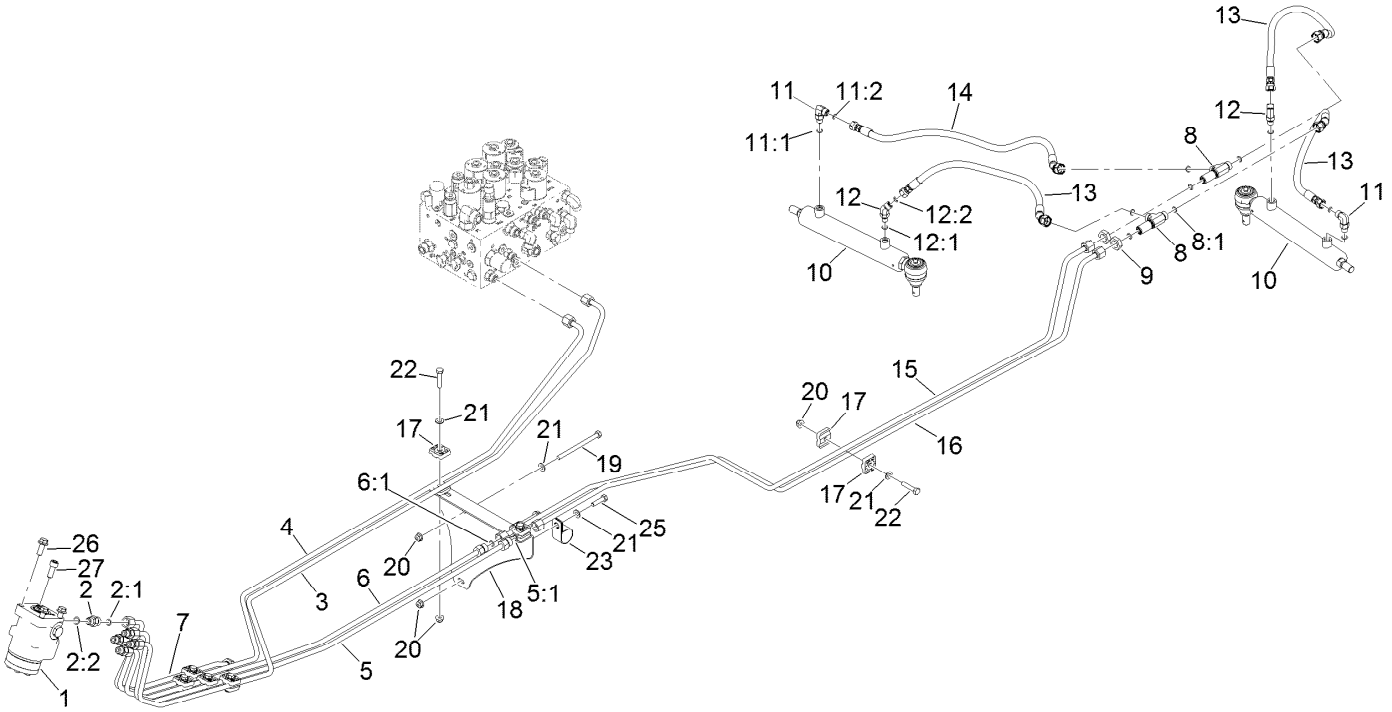

Hydraulic Steering Assembly

Ref.	Part Number	Qty.	Description
1	130-7949	1	Steering Control Valve ASM
2	340-2	5	Fitting-Straight
2:1	237-22	1	O-Ring
2:2	237-42	1	O-Ring
3	131-2372	1	Hydraulic Tube ASM
4	131-2373	1	Hydraulic Tube ASM
5	125-5349	1	Hydraulic Tube ASM
5:1	237-22	1	O-Ring
6	125-5351	1	Hydraulic Tube ASM
6:1	237-22	1	O-Ring
7	125-5337	1	Hydraulic Tube ASM
8	340-68	2	Fitting-Tee, Bulkhead
8:1	237-22	3	O-Ring
9	340-70	2	Nut-Lock
10	132-1308	2	HYD Cylinder ASM
11	340-132	2	Fitting-Elbow, 90 DEG
11:1	237-78	1	O-Ring
11:2	237-21	1	O-Ring

Ref.	Part Number	Qty.	Description
12	340-103	2	Fitting-HYD, 45 DEG
12:1	237-78	1	O-Ring
12:2	237-21	1	O-Ring
13	114-4922	3	HYD Hose ASM
14	114-4934	1	HYD Hose ASM
15	125-5352	1	Hydraulic Tube ASM
16	125-5353	1	Hydraulic Tube ASM
17	56-7973	14	Clamp-Tube
18	127-3492-01	1	Support-Hardlines
19	322-38	2	Screw-HH
20	104-8300	10	Nut-HF, NI
21	3256-23	10	Washer-Plain
22	322-7	3	Screw-HH
23	2412-82	1	Clamp-R
25	322-6	5	Screw-HH
26	108-1531	3	Screw-HHF
27	3273-41	1	Screw-HSH

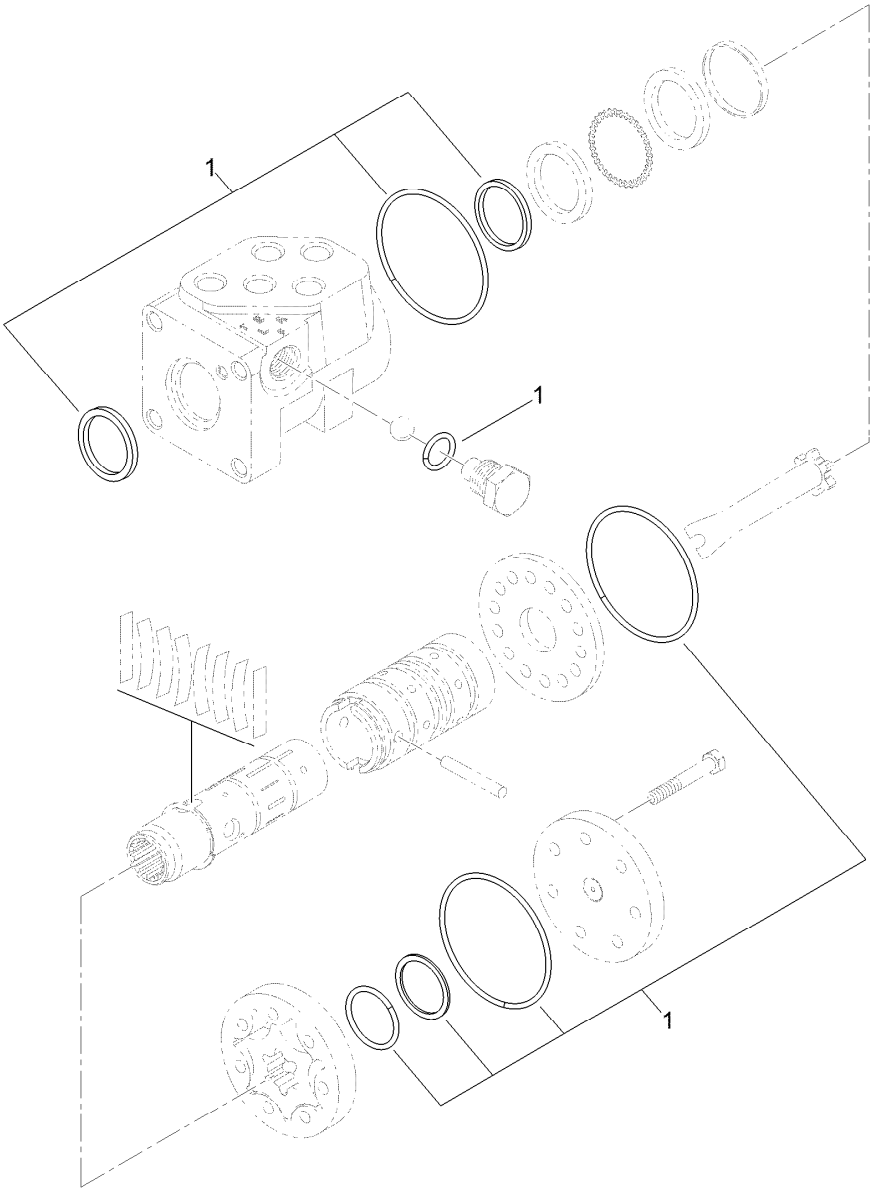

Steering Valve Assembly No. 130-7949

Ref.	*Part Number*	*Qty.*	*Description*
1	130-8358	1	Seal Kit

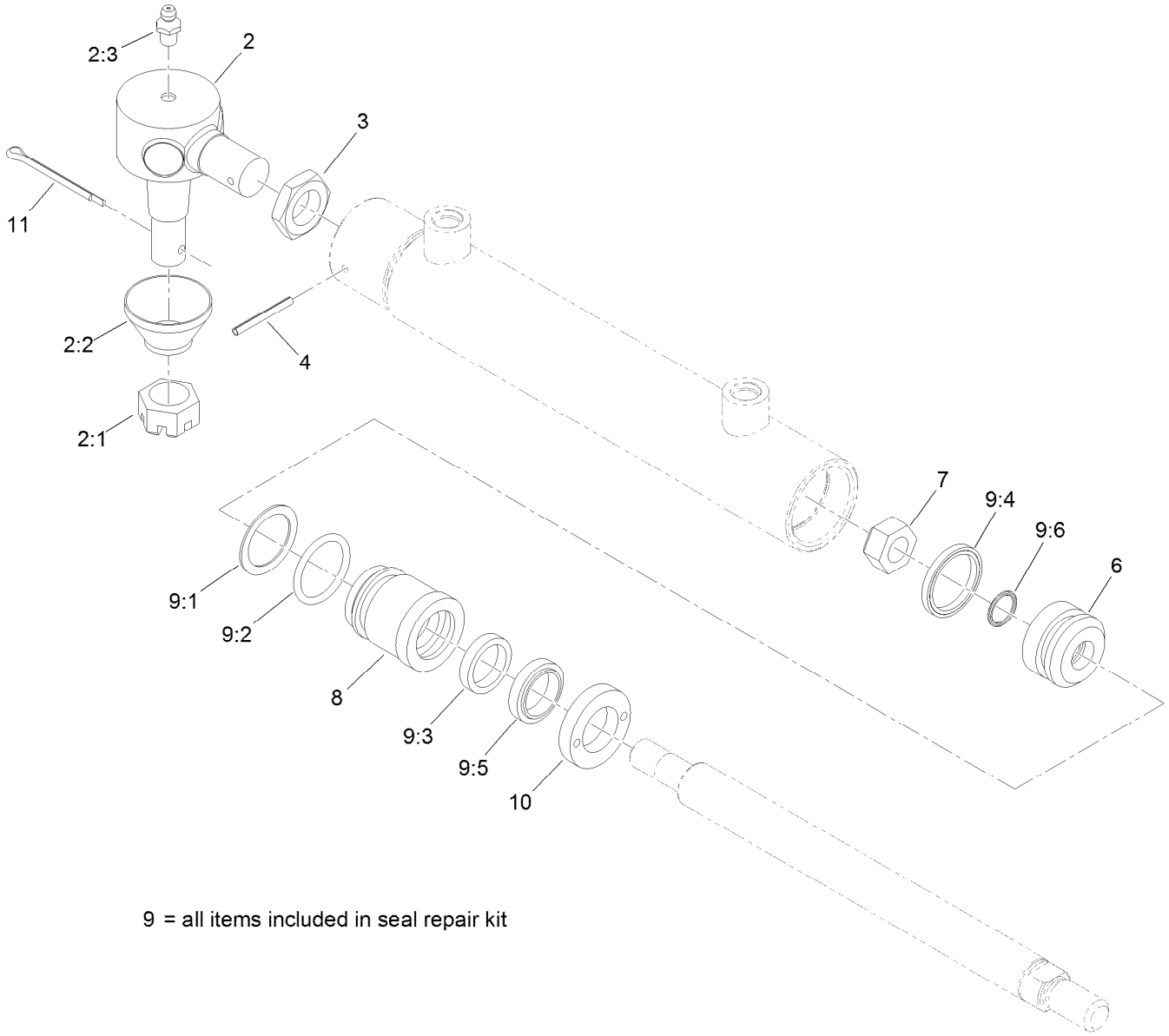

9 = all items included in seal repair kit

Hydraulic Cylinder Assembly No. 132-1308

Ref.	Part Number	Qty.	Description
2	82-5730	1	Tie Rod End ASM
2:1	105-7941	1	Nut-Hex, Slotted
2:2	105-7835	1	Seal
2:3	302-5	1	Fitting-Grease
3	69-1980	1	Nut-Jam
4	32121-34	1	Pin-Roll
6	133-2476	1	Piston
7	133-2477	1	Nut-Lock
8	133-2478	1	Head

Ref.	Part Number	Qty.	Description
9	133-2479	1	Seal Repair Kit
9:1		1	O-Ring ●
9:2		1	Ring-Backup ●
9:3		1	Seal-Bt ●
9:4		1	Seal-Psp ●
9:5		1	Seal-Psp ●
9:6		1	O-Ring ●
10	133-2482	1	Collar-Internal
11	3272-12	1	Pin-Cotter

● Not serviced separately

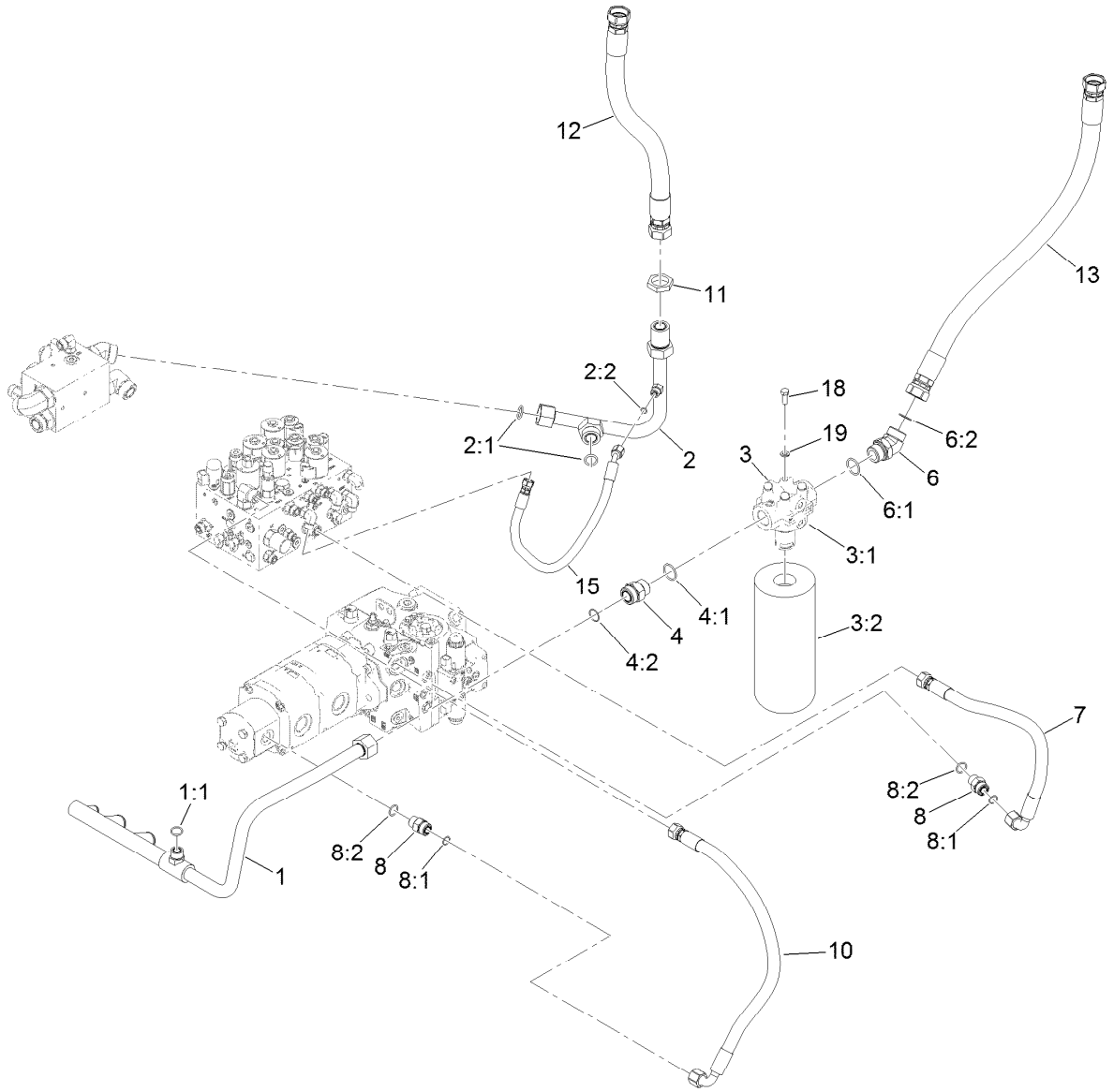

Hydraulic Filter Manifold Assembly

Ref.	Part Number	Qty.	Description
1	130-2510	1	Manifold-Suction
1:1	237-65	1	O-Ring
2	130-2548	1	Hydraulic Tube ASM
2:1	340-65	2	O-Ring
2:2	237-22	1	O-Ring
3	132-1404	1	Filter Head ASM
3:1		1	Head-Filter ●
3:2	86-6110	1	Filter-Hydraulic
4	104-3797	1	Fitting-Straight
4:1	237-146	1	O-Ring
4:2	340-65	1	O-Ring
6	104-3509	1	Fitting-HYD, 45 DEG
6:1	237-146	1	O-Ring

Ref.	Part Number	Qty.	Description
6:2	340-65	1	O-Ring
7	127-3519	1	Hydraulic Hose ASM
8	340-7	2	Fitting-Straight
8:1	237-65	1	O-Ring
8:2	237-80	1	O-Ring
10	130-2544	1	Hydraulic Hose ASM
11	340-128	1	Nut-Bulkhead
12	130-2514	1	Hydraulic Hose ASM
13	125-5366	1	Hydraulic Hose ASM
15	131-2216	1	Hydraulic Hose ASM
18	323-6	4	Screw-HH
19	3253-21	4	Washer-Lock

● Not serviced separately

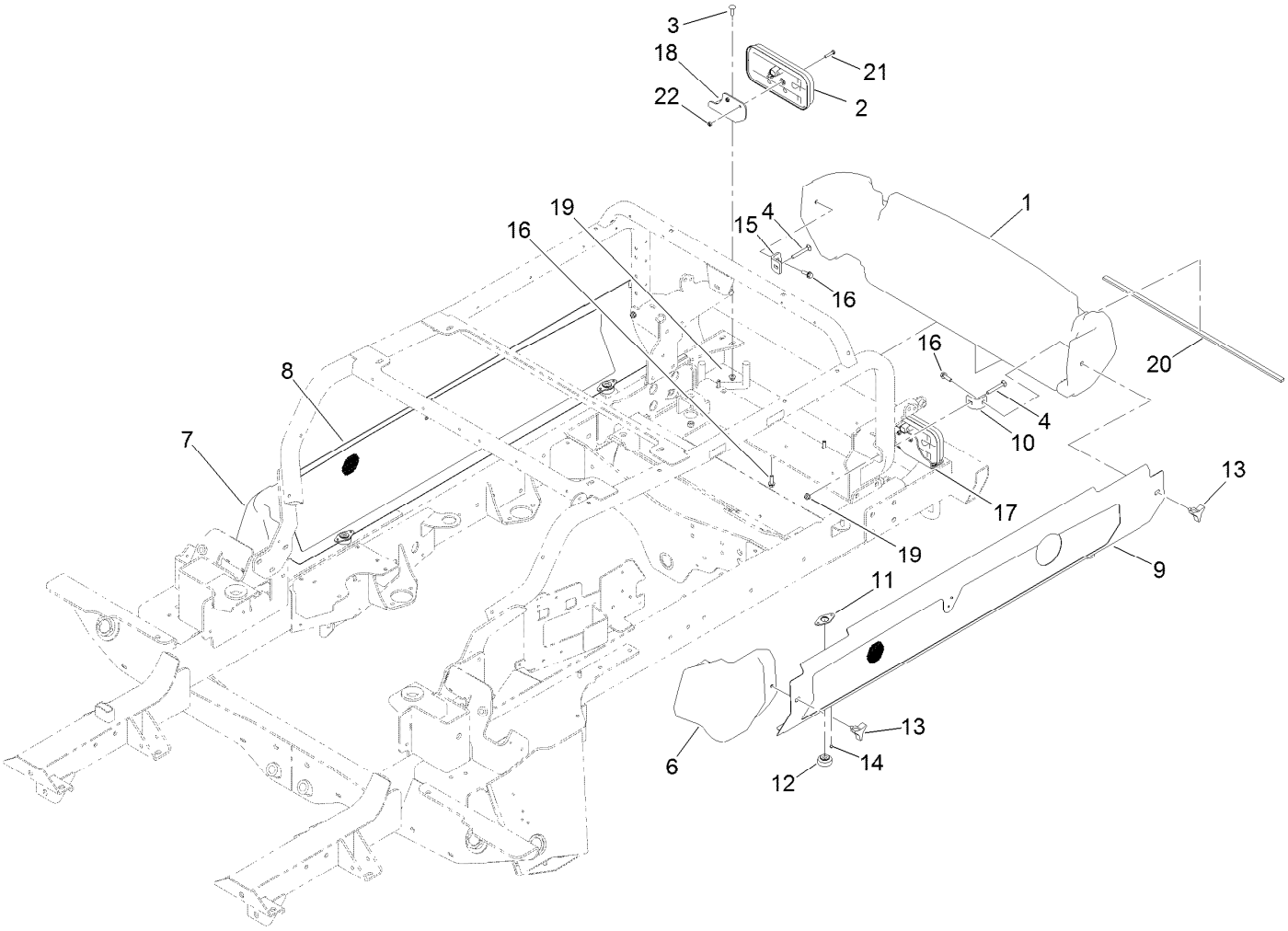

Side Panel and Bumper Assembly

Ref.	Part Number	Qty.	Description
1	130-9028	1	Shroud-Rear, Lower
2	130-9137	2	Taillight
3	3230-22	4	Screw-CARR
4	3230-8	2	Screw-CARR
6	117-5456	1	Shroud-Front, LH
7	117-5457	1	Shroud-Front, RH
8	131-2390-03	1	Panel-Side, RH
9	131-2393-03	1	Panel-Side, LH
10	130-9046	1	Bracket-Rear Shroud, LH
11	114-5619	4	Plate-Grommet
12	114-4869	4	Grommet

Ref.	Part Number	Qty.	Description
13	92-9674	4	Knob
14	1-803035	8	Rivet-Pop
15	130-9047	1	Bracket-Rear Shroud, RH
16	3234-17	6	Screw-HHF
17	130-9051-03	1	Bracket-Light, LH
18	130-9031-03	1	Bracket-Light, RH
19	104-8300	6	Nut-HF, NI
20	131-2219	1	Seal-Foam
21	33113-030	4	Screw-HH
22	33023-00	4	Nut-Lock

Hood Assembly

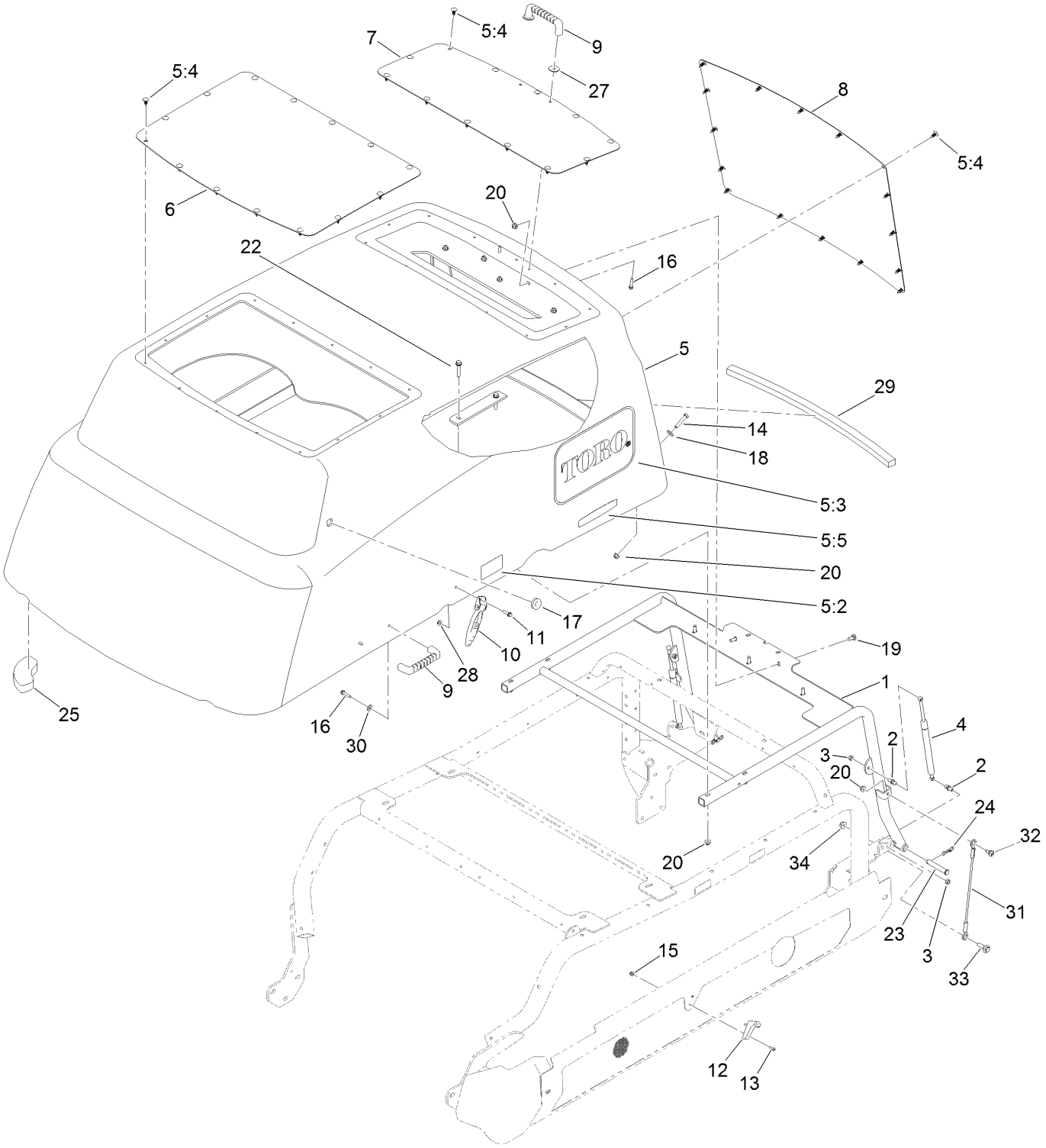

Hood Assembly (continued)

Ref.	Part Number	Qty.	Description
1	130-9011-03	1	Frame-Hood
2	103-5752	4	Stud-Ball
3	32153-3	4	Nut-Hex, Side Deform
4	114-5532	2	Cylinder-Gas
5	132-1405	1	Hood ASM
5:2	106-6754	2	Decal-Danger
5:3	114-0990	2	Decal
5:4	117-2382	42	Plug-Plastic
5:5	121-1594	2	Decal-Smart Power
6	130-9008-03	1	Screen-Cooler, Hood
7	130-9009-03	1	Screen-Air Intake, Hood
8	130-9010-03	1	Screen-Radiator, Hood
9	65-5100	3	Handle-Door
10	103-2898	2	Latch-Rubber
11	120-4654	2	Screw-HHF
12	103-2897	2	Latch-Catch
13	3274-39	4	Screw-HSBH
14	322-9	2	Screw-HH
15	120-4578	4	Nut-HF
16	46-8092	6	Screw-Plastite
17	104-1453	1	Grommet
18	3256-3	2	Washer-Flat
19	3230-10	5	Bolt-CARR
20	104-8300	13	Nut-HF, NI
22	94-5780	4	Screw-HWH
23	283-55	2	Pin-Clevis
24	119-1416	2	Pin-Cotter, Locking
25	130-9019	2	Foam-Hood, Corner
27	3256-57	2	Washer-Flat
28	104-7201	2	Nut-HF, NI
29	131-2359	1	Foam-Hood
30	3256-2	4	Washer-Flat
31	130-5726	2	Lanyard
32	120-9471	2	Bolt-Shoulder
33	614672	2	Screw-Shoulder, HWH
34	104-8301	2	Nut-HF, NI

Center Front Deck Connection Assembly

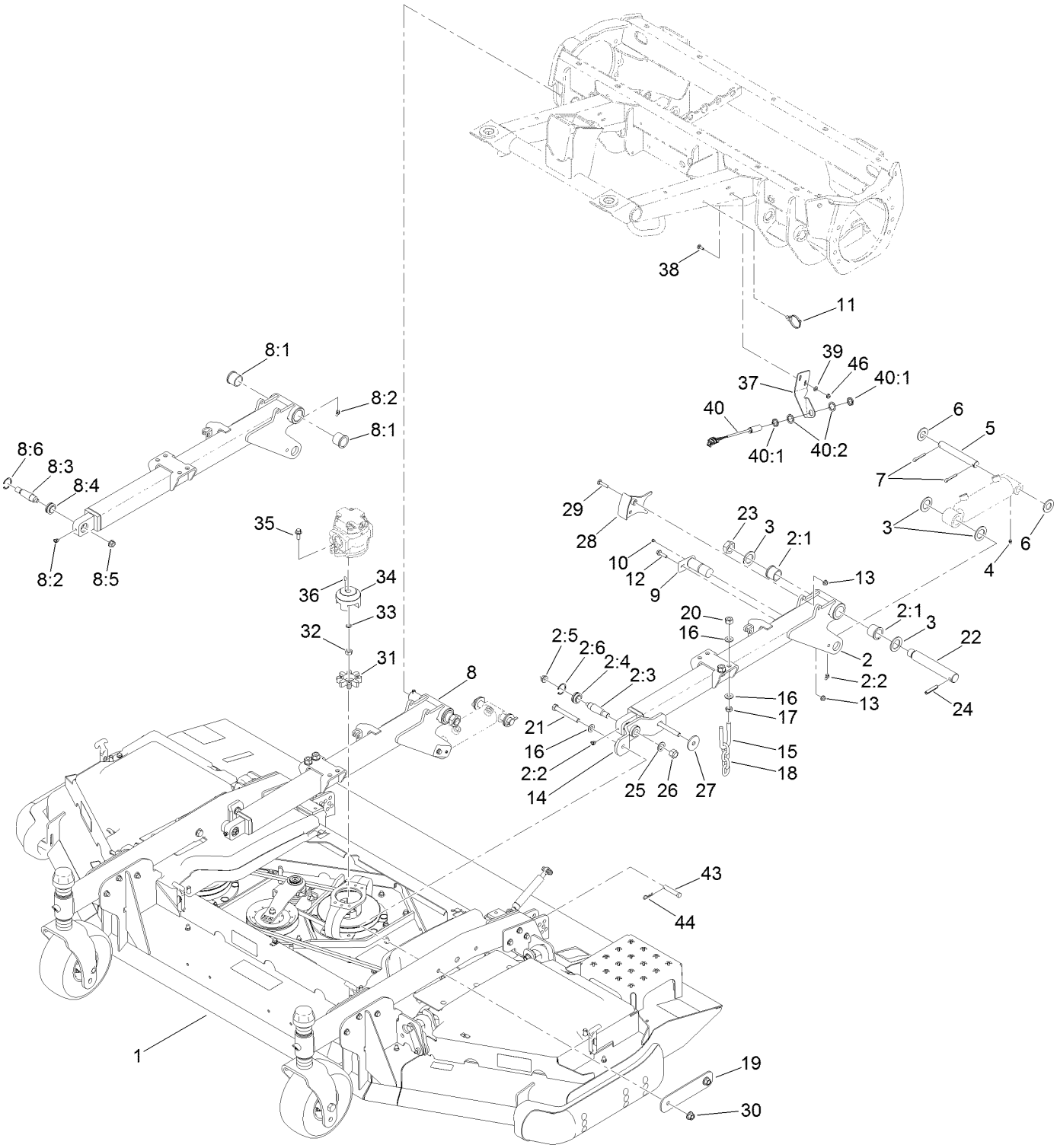

Center Front Deck Connection Assembly (continued)

Ref.	Part Number	Qty.	Description
1		1	Front Center Deck ASM ●
2	110-5962	1	LH Front Lift Arm ASM
2:1	104-0015	2	Bushing-Flange
2:2	302-11	2	Fitting-Lube, 45 DEG
2:3	105-7468	1	Stud-Tapered
2:4	105-7441	1	Bearing-Spherical
2:5	32128-42	1	Nut-HF
2:6	32151-34	1	Ring-Retaining
3	AU495-81203	8	Washer
4	302-5	4	Fitting-Grease
5	110-6006	2	Pin-Clevis
6	3256-29	4	Washer-Flat
7	3272-30	4	Pin-Cotter
8	110-5966	1	RH Front Lift Arm ASM
8:1	104-0015	2	Bushing-Flange
8:2	302-11	2	Fitting-Lube, 45 DEG
8:3	105-7468	1	Stud-Tapered
8:4	105-7441	1	Bearing-Spherical
8:5	32128-42	1	Nut-HF
8:6	32151-34	1	Ring-Retaining
9	125-1912	2	Pin-Pivot
10	1-811010	2	Plug
11	32180-030	1	Clip-Tie
12	119-4036	2	Screw-HHF
13	104-8300	3	Nut-HF, NI
14	115-5442-01	2	Support-Hub
15	104-0108	2	U-Bolt
16	3256-26	12	Washer-Flat
17	3218-5	4	Nut-Jam
18	95-6231	2	Chain-HOC
19	130-9233-01	2	Plate-Reinforcing
20	3296-25	4	Nut-Lock, NI
21	325-17	4	Screw-HH
22	100-3017	2	*obs Pin-Lift Arm
23	3296-49	2	Nut-Lock, NI
24	32121-110	2	Pin-Roll, Slotted
25	86-1440	2	Washer-Flat
26	3296-41	2	Nut-Lock NI
27	75-7730	2	Washer-Thrust
28	114-0738-01	1	Sensor Trigger ASM
29	3230-4	1	Bolt-CARR
30	99-5107	4	Nut-Lock
31	104-3542	1	Spider
32	110-8815	1	Nut-Hex
33	112-6957	1	Washer-Hardened
34	104-3541	1	Hub-Spider
35	3234-42	2	Screw-HHF
36	3257-3	1	Key-Woodruff
37	133-2234-01	1	Bracket-Sensor, Front
38	3229-1	2	Screw-CARR
39	3256-22	2	Washer-Flat
40	115-5300	1	Proximity Switch ASM
40:1	117-3207	2	Nut-Hex
40:2	117-3208	2	Washer-Lock, Internal Tooth
43	92-2743	2	Pin-Clevis
44	3290-467	2	Pin-Hair
46	104-7201	2	Nut-HF, NI

● Not serviced separately

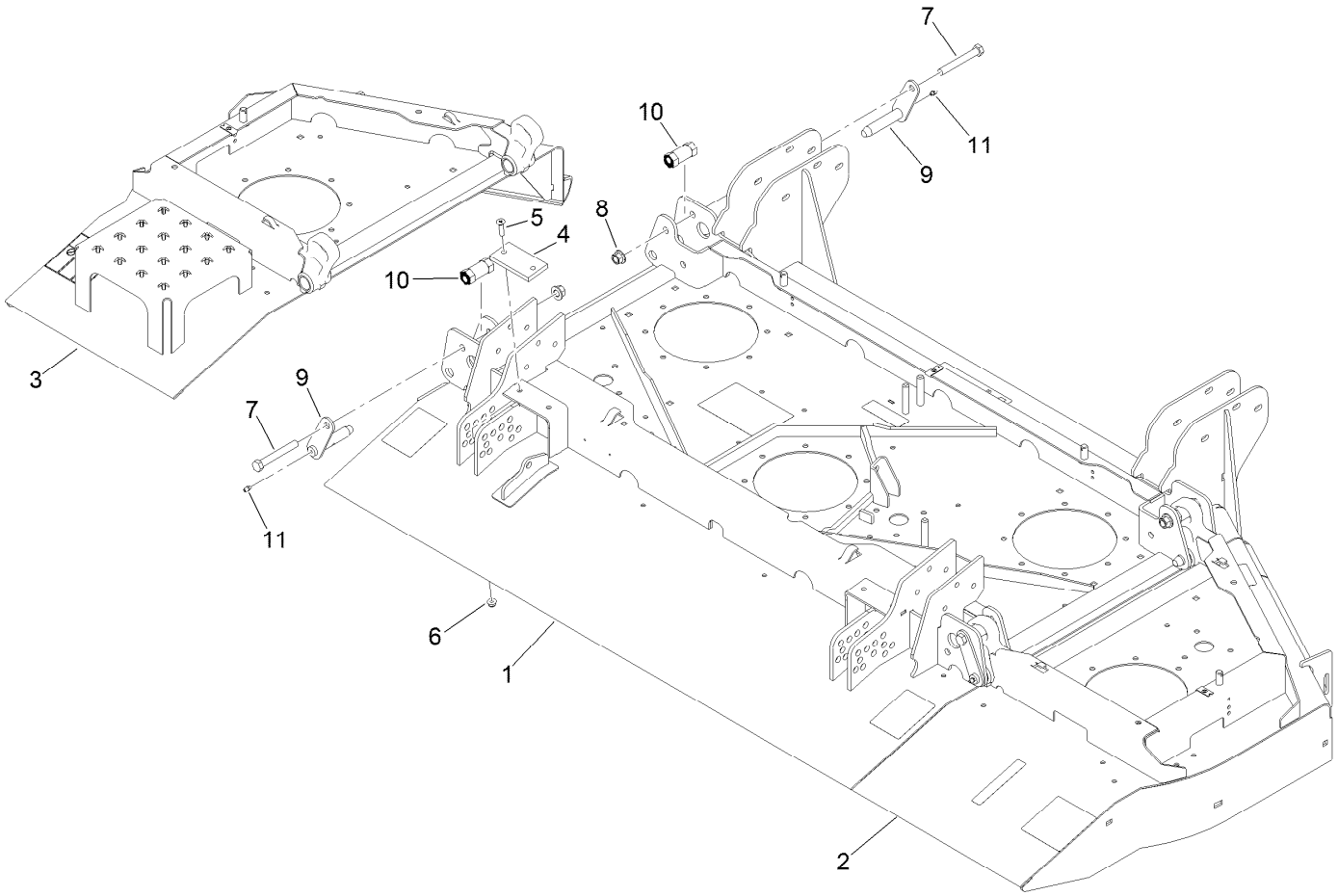

Center Front and Winglet Deck Assembly

Ref.	*Part Number*	*Qty.*	*Description*
1	130-9201	1	Center Front Deck ASM
2	130-9218	1	Right Front Deck ASM
3	130-9210	1	Left Front Deck ASM
4	69-9300	2	Pad-Bumper
5	32108-103	4	Screw-FH
6	104-8300	4	Nut-HF, NI
7	325-35	4	Screw-HH
8	99-5107	4	Nut-Lock
9	114-0714	4	Hinge Pin ASM
10	115-3367	4	Eccentric
11	302-5	4	Fitting-Grease

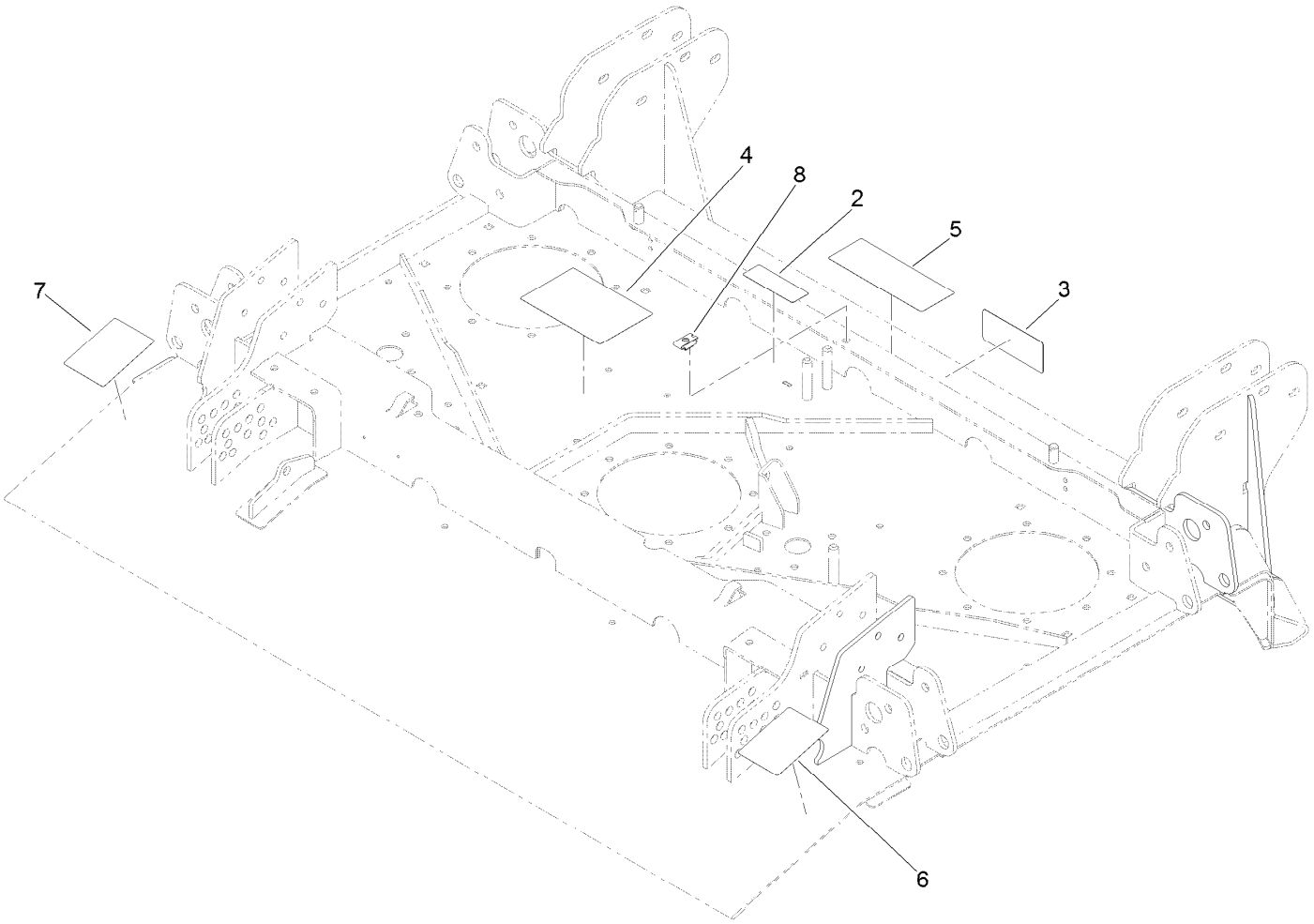

Center Front Deck and Decal Assembly No. 130-9201

Ref.	*Part Number*	*Qty.*	*Description*
2	117-4979	1	Decal-Warning
3	93-7818	1	Decal-Torque, Blade Bolt
4	114-0922	1	Decal-Belt Routing
5	131-6027	1	Decal-HOC
6	131-6026	1	Decal-Rear HOC, RH
7	131-6025	1	Decal-Rear HOC, LH
8	110-3510	1	Nut-Retainer

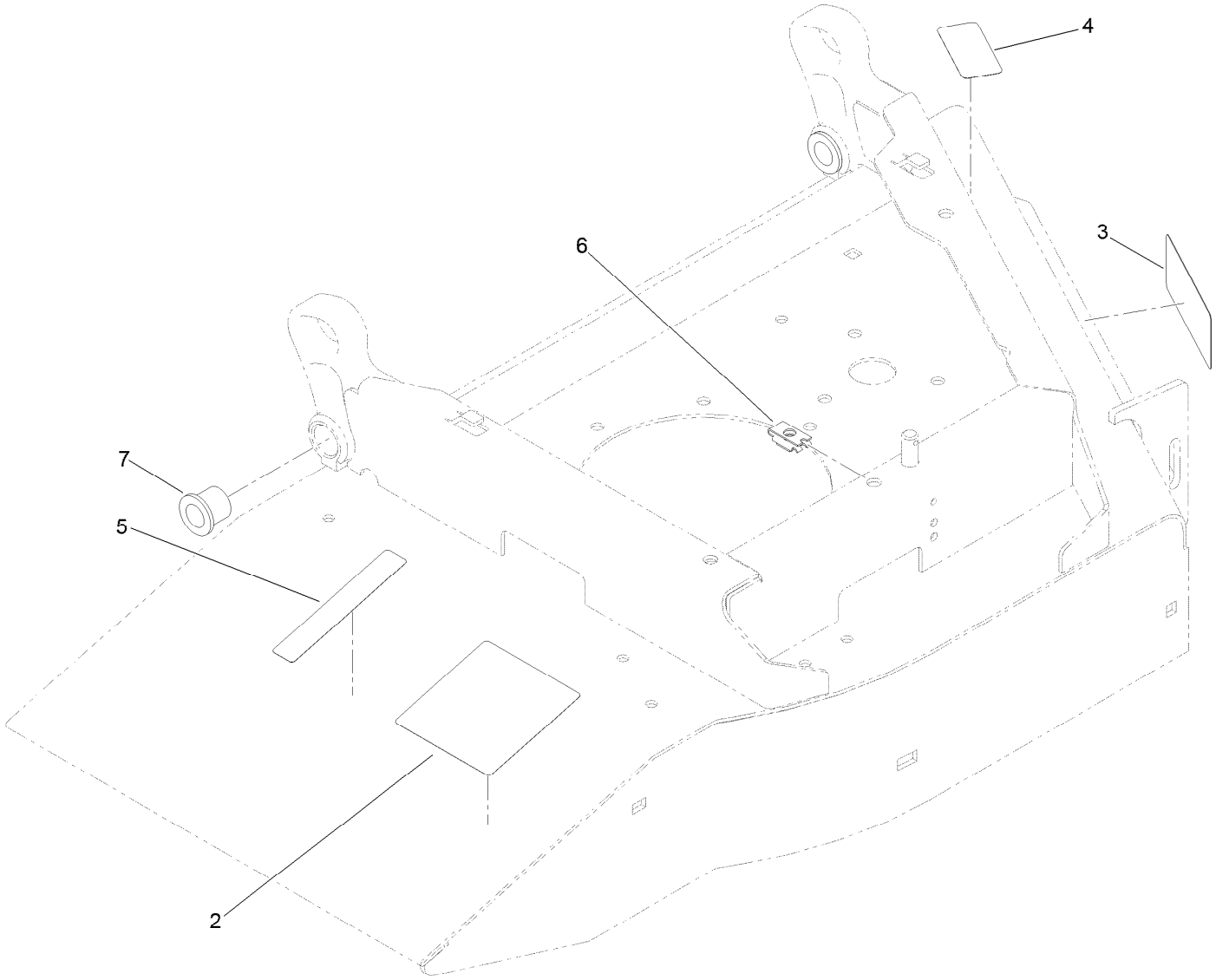

Right Front Deck and Decal Assembly No. 130-9218

Ref.	*Part Number*	*Qty.*	*Description*
2	120-6604	1	Decal-Danger
3	93-7818	1	Decal-Torque, Blade Bolt
4	93-6674	1	Decal-Warning
5	93-6687	1	Decal-No Step
6	110-3510	1	Nut-Retainer
7	92-3162	4	Bushing

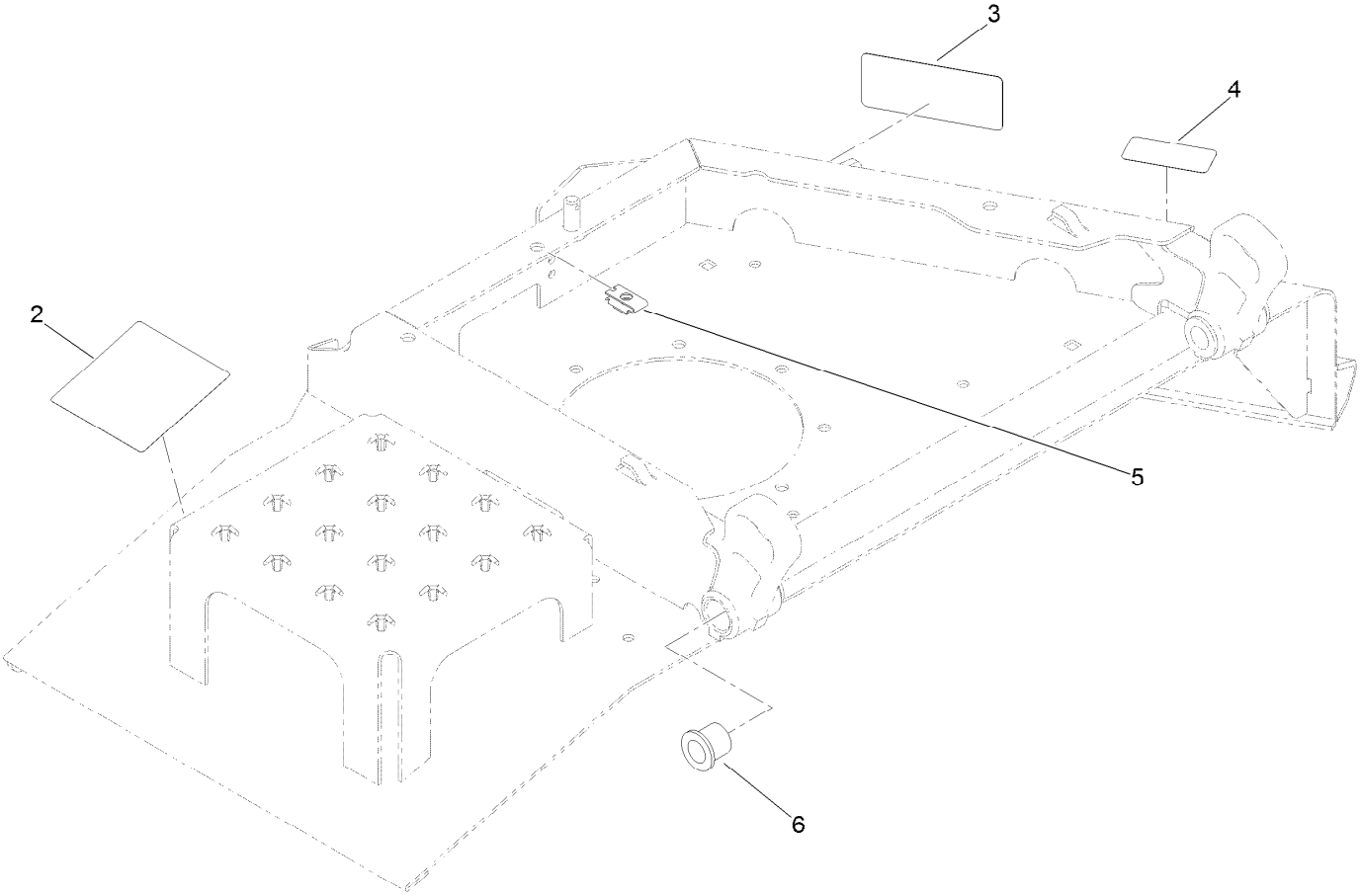

Left Front Deck and Decal Assembly No. 130-9210

Ref.	*Part Number*	*Qty.*	*Description*
2	120-6604	1	Decal-Danger
3	93-7818	1	Decal-Torque, Blade Bolt
4	93-6674	1	Decal-Warning
5	110-3510	1	Nut-Retainer
6	92-3162	4	Bushing

Center Deck Belt, Pulley and Spindle Assembly

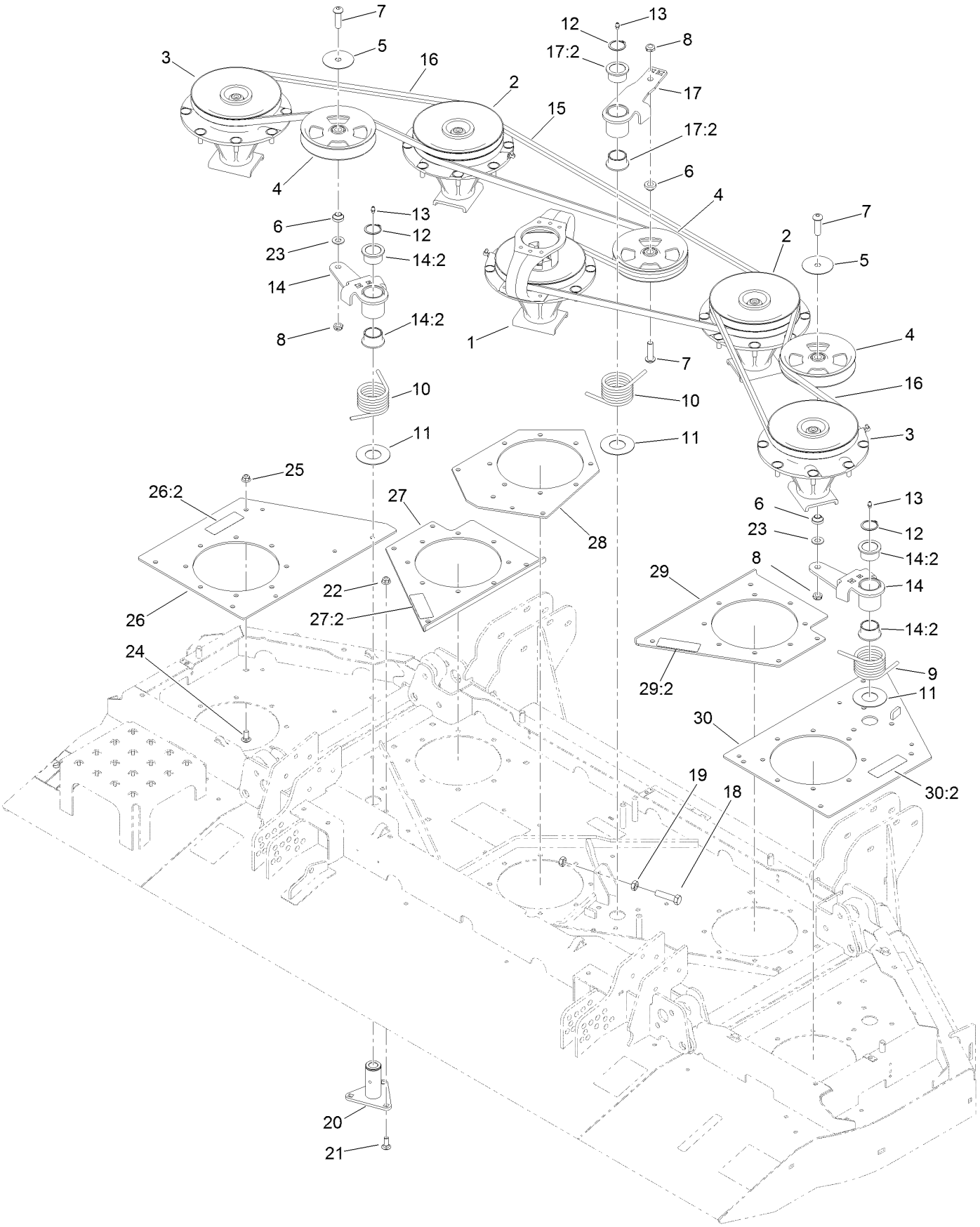

Center Deck Belt, Pulley and Spindle Assembly (continued)

Ref.	Part Number	Qty.	Description
1	131-0768	1	Driving Spindle ASM
2	117-9234	2	Double Spindle ASM
3	117-9233	2	High Spindle ASM
4	132-9421	3	Pulley-Idler, Flat
5	100-3102	2	Washer-Flat
6	108-1924	3	Spacer-Idler
7	108-1993	3	Screw-HSBH
8	3296-45	3	Nut-Hex
9	108-1921	1	Spring-Torsion
10	112-7395	2	Spring-Torsion
11	108-1926	3	Washer
12	32120-84	3	Ring-Snap, External
13	302-5	3	Fitting-Grease
14	117-9176	2	Idler Arm ASM
14:2	93-4510	2	Bushing-Caster
15	112-7376	1	Belt-V, B
16	112-7377	2	Belt-V, B
17	114-0100	1	High Idler Arm ASM
17:2	93-4510	2	Bushing-Caster
18	01-182-0816	1	Bolt-HH
19	3218-5	2	Nut-Jam
20	114-0997	3	Pivot-Idler
21	3231-2	9	Bolt-CARR
22	104-8301	9	Nut-HF, NI
23	3256-26	2	Washer-Flat
24	3231-27	19	Screw-CARR
25	104-8301	19	Nut-HF, NI
26	132-1611	1	LH Spindle Plate ASM
26:2	117-4979	1	Decal-Warning
27	132-1608	1	Left Spindle Plate ASM
27:2	117-4979	1	Decal-Warning
28	132-1602-01	1	Plate-Spindle, Center
29	132-1607	1	Right Spindle Plate ASM
29:2	117-4979	1	Decal-Warning
30	132-1609	1	RH Spindle Plate ASM
30:2	117-4979	1	Decal-Warning

Driving Spindle Assembly No. 131-0768

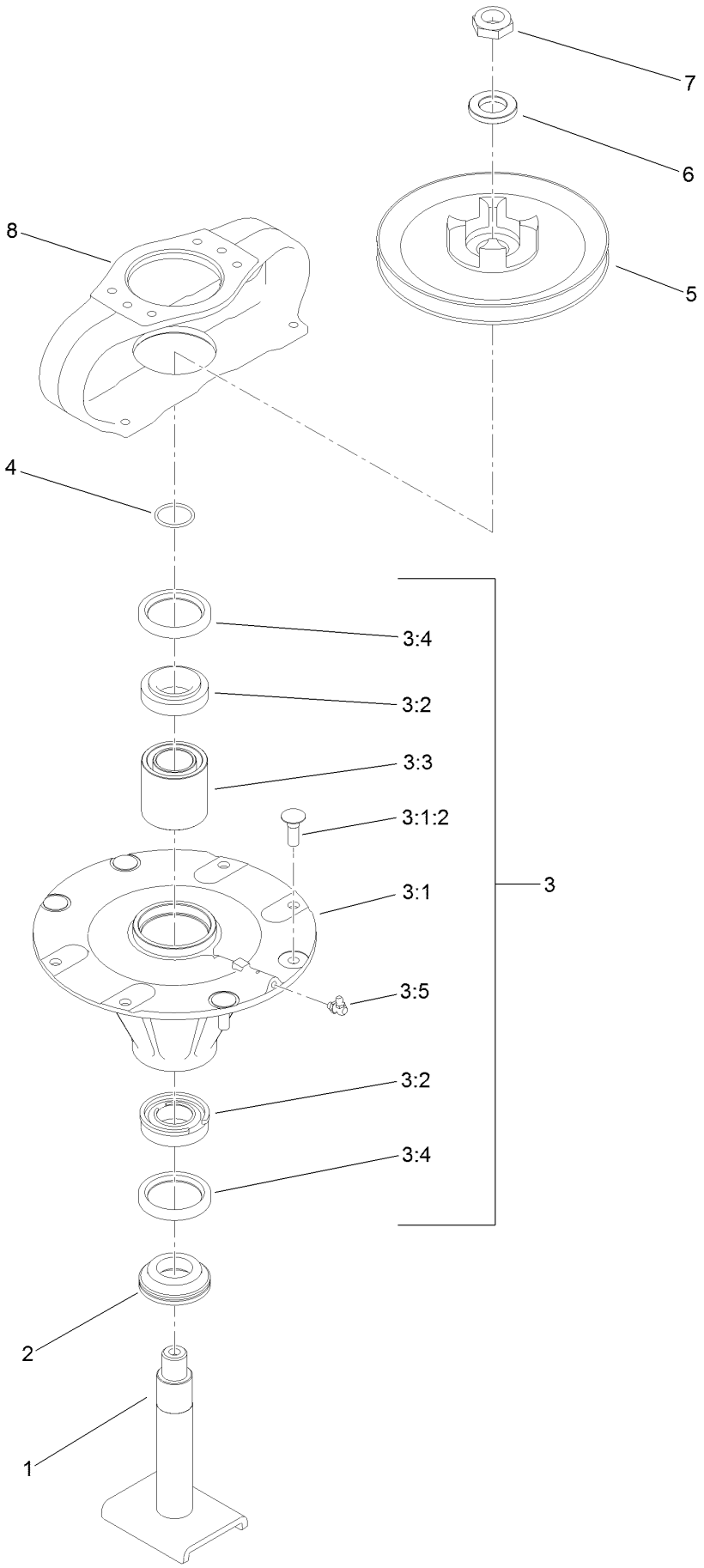

Driving Spindle Assembly No. 131-0768 (continued)

Ref.	Part Number	Qty.	Description
1	108-1956	1	Shaft-Spindle
2	69-6950	1	Spacer-Shaft, Spindle
3	131-0767	1	Spindle Housing ASM
3:1		1	Spindle ASM ●
3:1:2	114-8195	4	Bolt-Neck, Ribbed
3:2	110-8297	1	Bearing ASM
3:3	108-1954	1	Bearing Spacer Set
3:4	253-154	2	Seal-Oil
3:5	302-60	1	Fitting-Grease
4	106-7159	1	O-Ring
5	104-3545	1	Pulley-Driving
6	120-5576	1	Washer-Hardened
7	3296-60	1	Nut-Lock, NI
8	104-3544	1	Mount-Motor, Drive

● Not serviced separately

High Spindle Assembly No. 117-9233

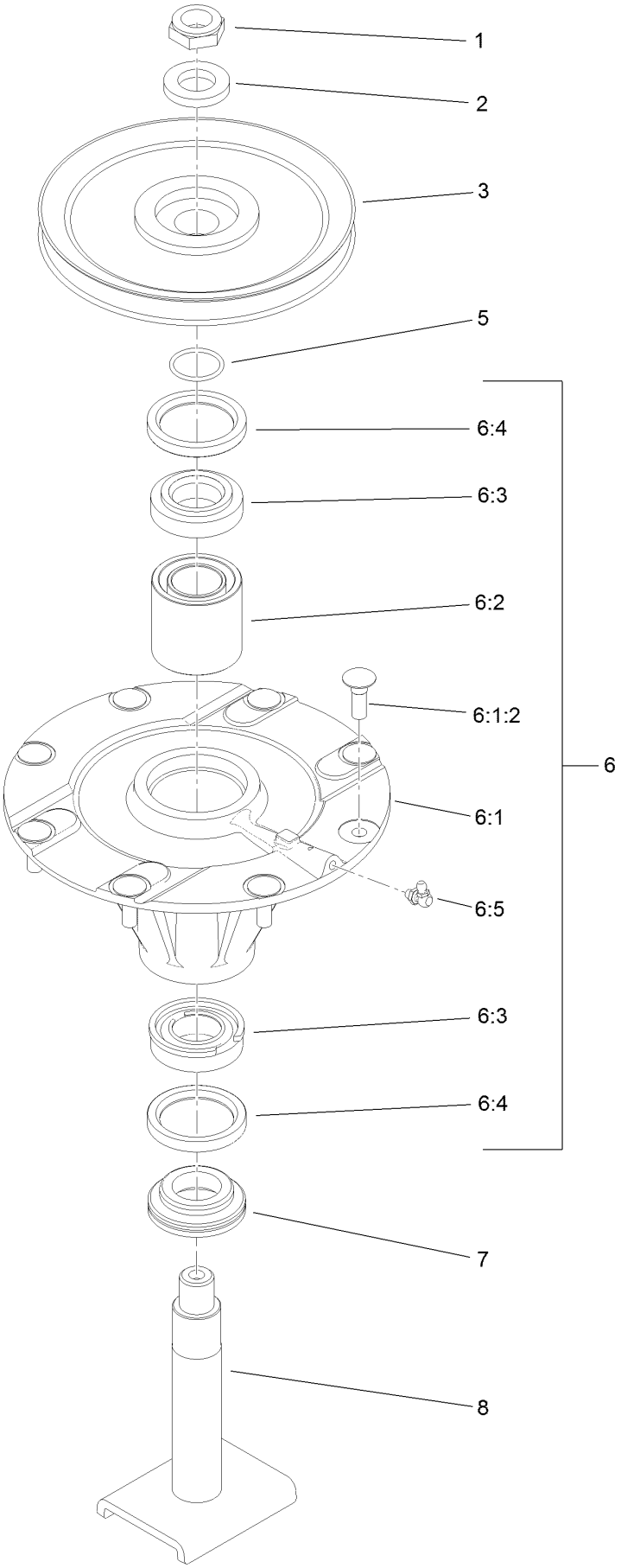

High Spindle Assembly No. 117-9233 (continued)

Ref.	Part Number	Qty.	Description
1	3296-60	1	Nut-Lock, NI
2	120-5576	1	Washer-Hardened
3	104-3547	1	Pulley-Driven, Double
5	106-7159	1	O-Ring
6	119-4777	1	Spindle ASM
6:1		1	Spindle ASM ●
6:1:2	114-8195	8	Bolt-Neck, Ribbed
6:2	108-1954	1	Bearing Spacer Set
6:3	110-8297	1	Bearing ASM
6:4	253-154	2	Seal-Oil
6:5	302-60	1	Fitting-Grease
7	69-6950	1	Spacer-Shaft, Spindle
8	108-1956	1	Shaft-Spindle

● Not serviced separately

Double Spindle Assembly No. 117-9234

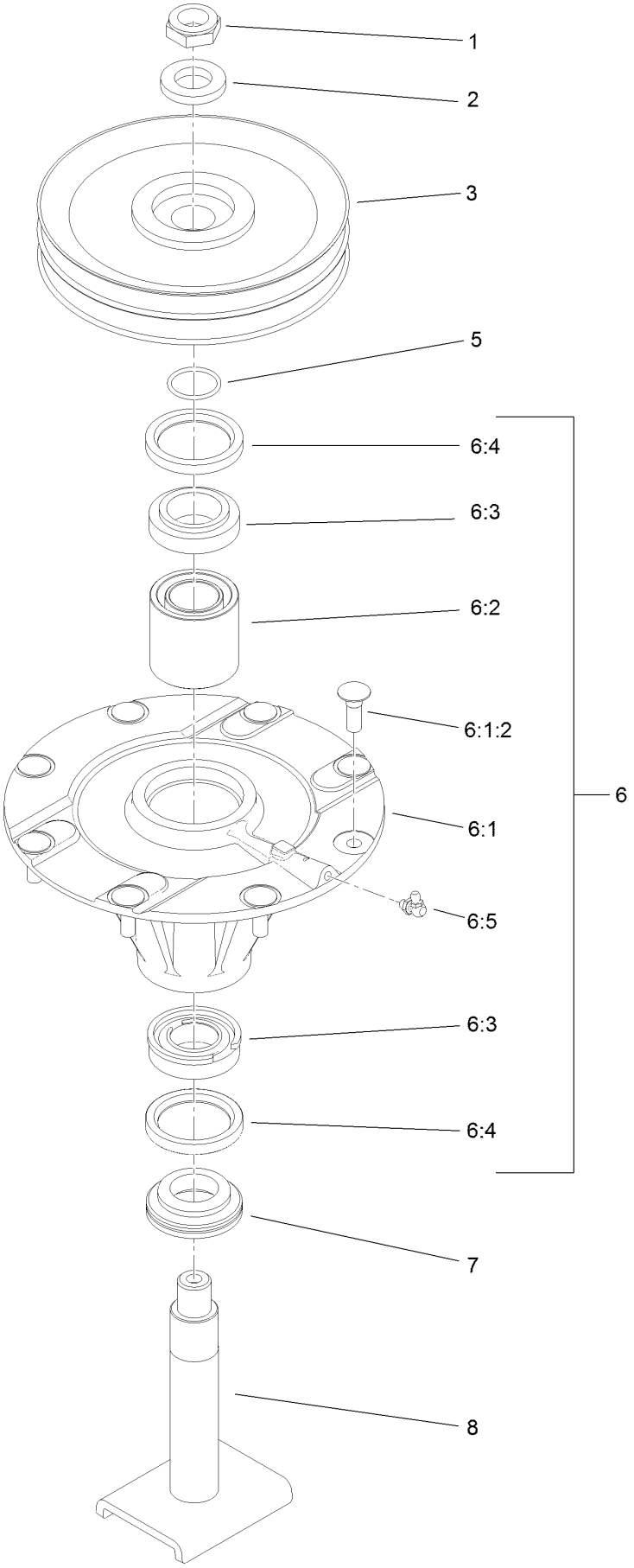

Double Spindle Assembly No. 117-9234 (continued)

Ref.	Part Number	Qty.	Description
1	3296-60	1	Nut-Lock, NI
2	120-5576	1	Washer-Hardened
3	104-3548	1	Pulley-Driven, High
5	106-7159	1	O-Ring
6	119-4777	1	Spindle ASM
6:1		1	Spindle ASM ●
6:1:2	114-8195	8	Bolt-Neck, Ribbed
6:2	108-1954	1	Bearing Spacer Set
6:3	110-8297	1	Bearing ASM
6:4	253-154	2	Seal-Oil
6:5	302-60	1	Fitting-Grease
7	69-6950	1	Spacer-Shaft, Spindle
8	108-1956	1	Shaft-Spindle

● Not serviced separately

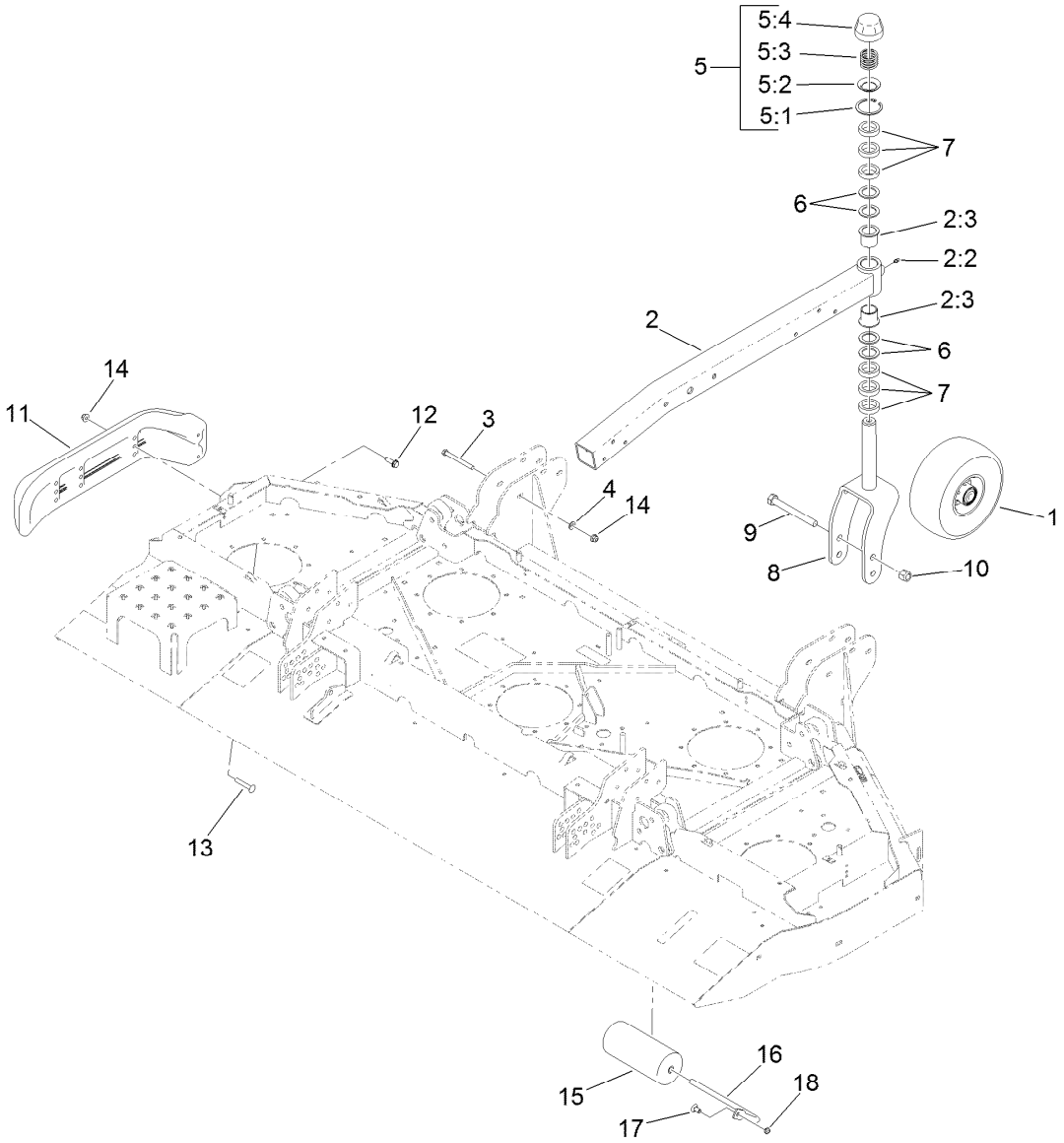

Center Deck Roller, Skid and Caster Wheel Assembly

Ref.	Part Number	Qty.	Description
1	93-4240	2	10 Inch Wheel ASM
2	130-7787	2	Caster Arm ASM
2:2	302-5	1	Fitting-Grease
2:3	69-6470	2	Bushing-Caster
3	323-42	12	Screw-HH
4	3256-24	12	Washer-Plain
5	92-9727	2	HOC Cap ASM
5:1	92-5581	1	Ring-Rtng,Snap,Int,Flat
5:2	92-5583	1	Washer-Cap
5:3	92-9726	1	Spring-Compression
5:4	92-8861	1	Cap-HOC
6	69-6860	8	Washer-Thrust

Ref.	Part Number	Qty.	Description
7	69-1510	12	Spacer
8	130-7784-01	2	Fork-Caster
9	327-24	2	Screw-HH
10	3296-53	2	Nut-Lock, NI
11	112-1479	2	Skid-Bumper, Deck
12	9136144	2	Screw-HWHTF
13	3231-33	4	Screw-CARR
14	104-8301	16	Nut-HF, NI
15	68-6710	1	Roller
16	68-6840	1	Shaft-Roller
17	3231-21	1	Screw-CARR
18	3296-59	1	Nut-Lock, NI

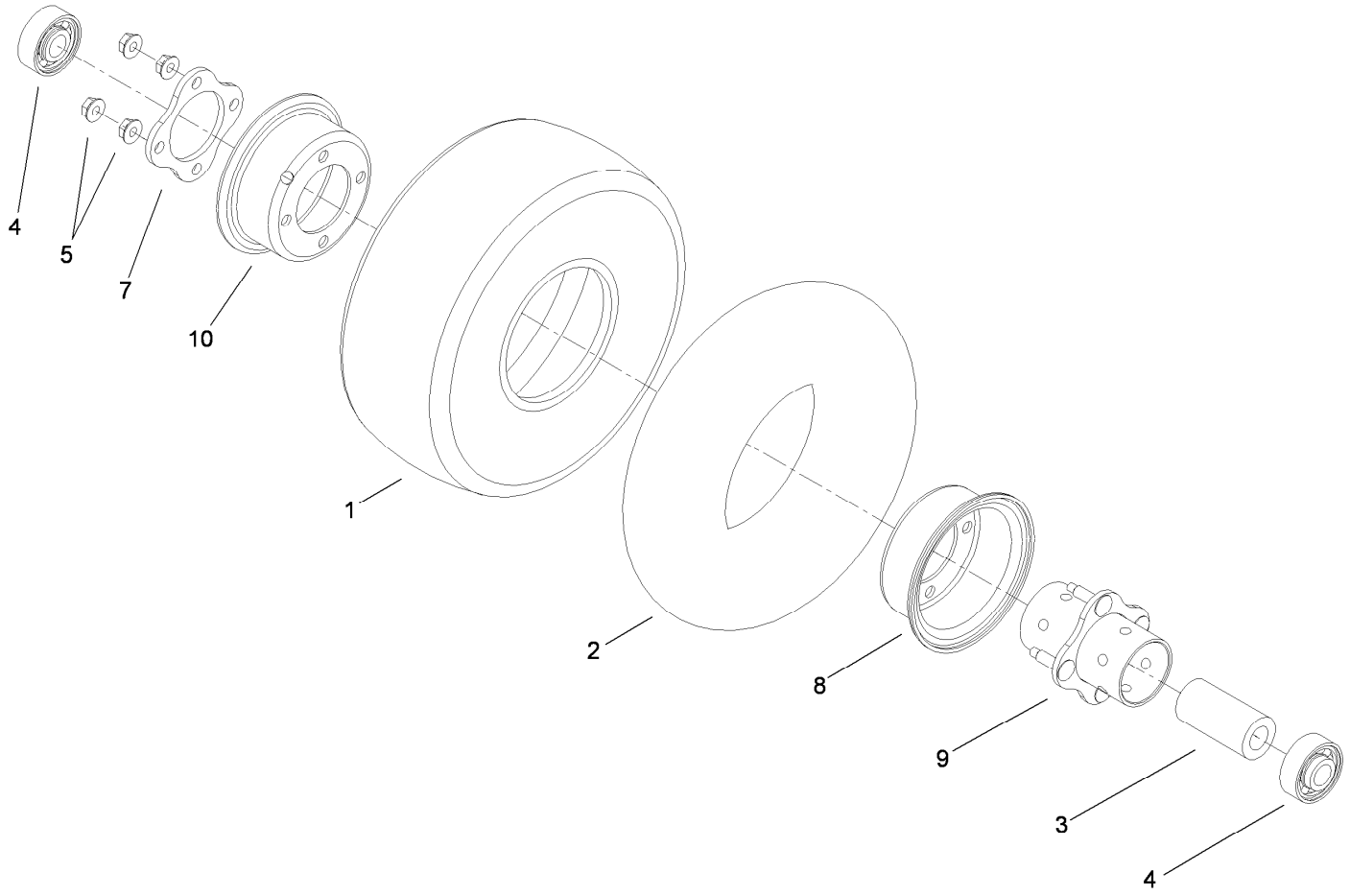

10 Inch Wheel Assembly No. 93-4240

Ref.	*Part Number*	*Qty.*	*Description*
1	93-4243	1	Tire
2	93-4244	1	Tube-Inner (W/Valve)
3	93-4241	1	Spacer-Bearing, Inner
4	120-3366	2	Bearing
5	32128-16	4	Nut-HHF
7	93-4242	1	Plate
8	93-4239	1	Rim-Wheel, Half
9	93-5980	1	Hub
10	95-2741	1	Rim-Wheel, Half

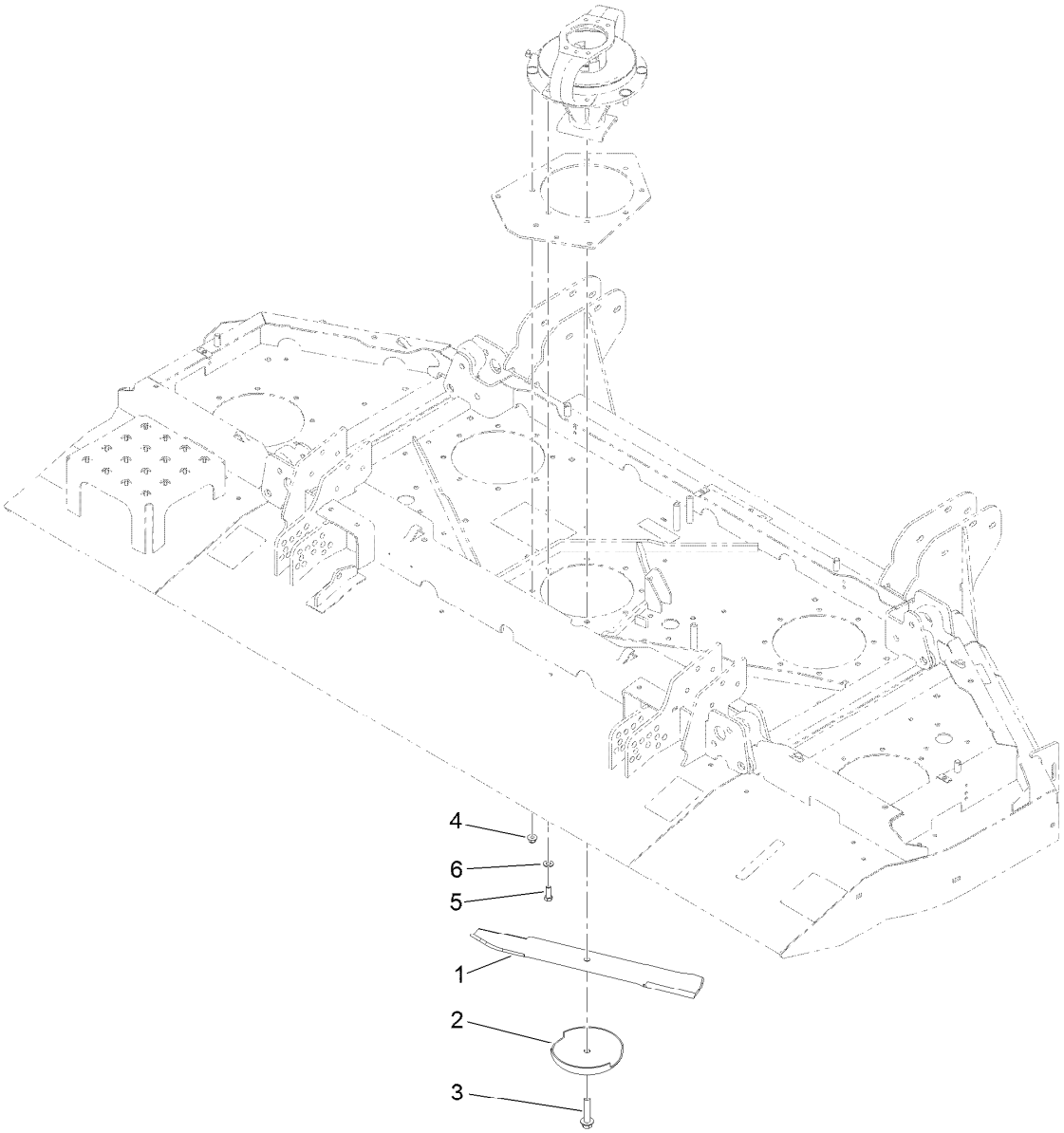

Center Front Deck Spindle and Blade Assembly

Ref.	*Part Number*	*Qty.*	*Description*
1	130-9151	5	Blade-20 In
2	72-9361	5	Cup-Scalp, Anti
3	92-5816	5	Bolt-Blade
4	104-8301	36	Nut-HF, NI
5	323-6	4	Screw-HH
6	3256-24	4	Washer-Plain

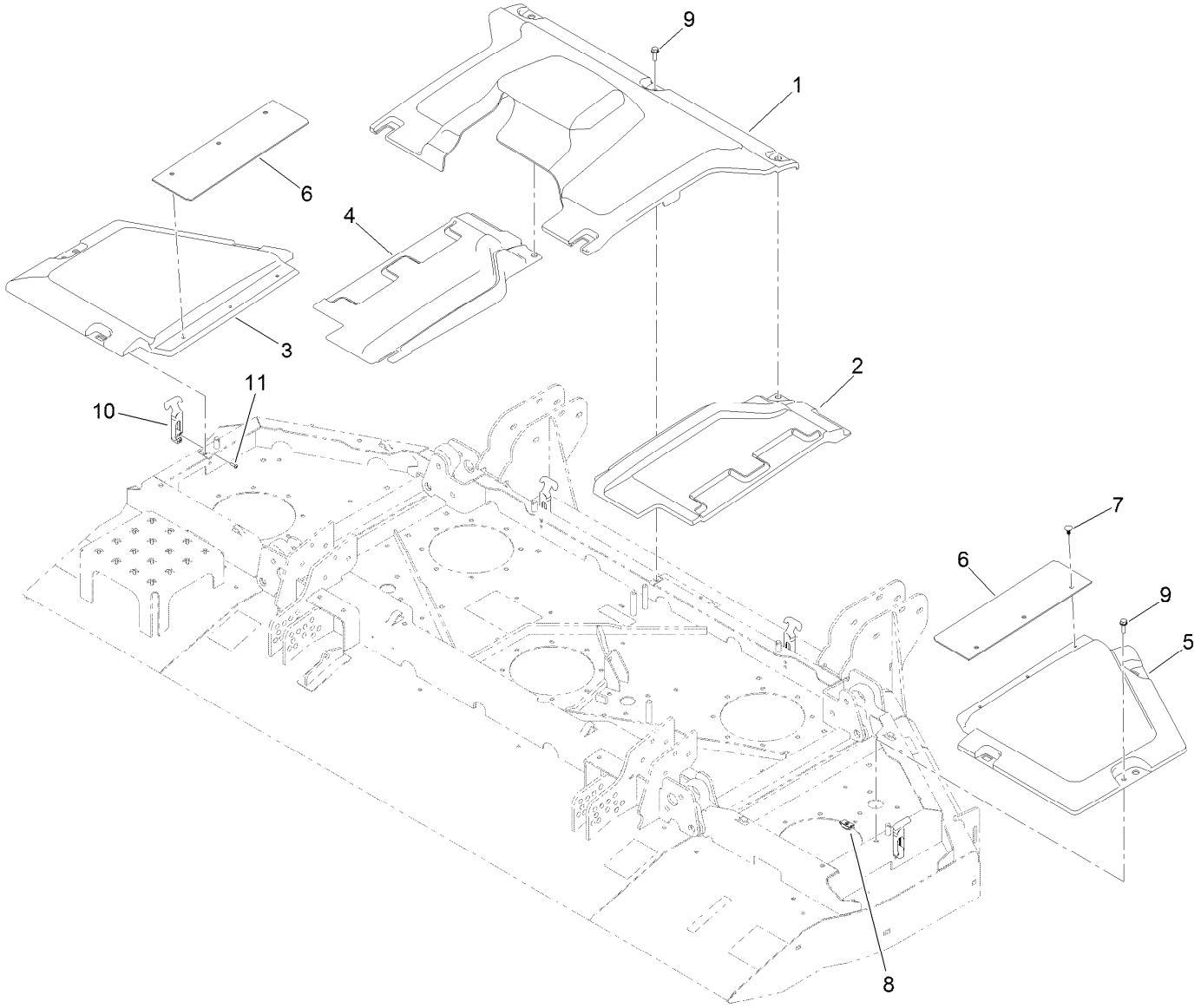

Center Front Deck Belt Cover Assembly

Ref.	*Part Number*	*Qty.*	*Description*
1	131-2223	1	Cover-Front Deck, Center
2	114-5632	1	Cover-Front Deck, RH Transition
3	114-5629	1	Cover-Front Deck, LH
4	114-5631	1	Cover-Front Deck, LH Transition
5	114-5628	1	Cover-Front Deck, RH
6	115-5424	2	Shield-Deck, Flexible
7	117-2382	6	Plug-Plastic
8	110-3510	3	Nut-Retainer
9	3234-29	3	Screw-HHF
10	103-4080	4	Latch-Rubber
11	3274-39	8	Screw-HSBH

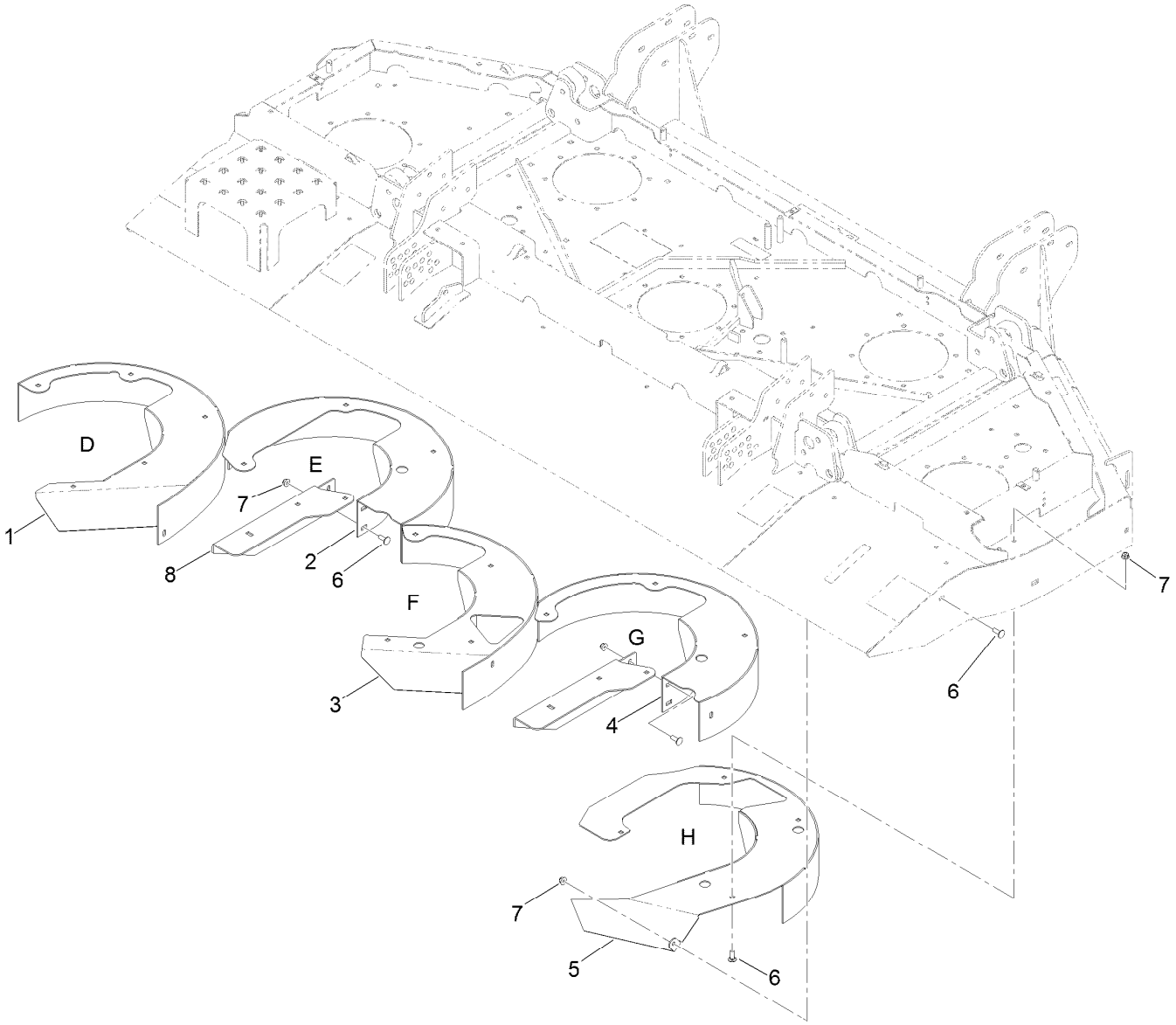

Center Front Deck Chamber and Discharge Assembly

Ref.	Part Number	Qty.	Description
1	132-1640-01	1	Chamber-Front, Left
2	133-2244-01	1	Chamber-Front, Left Center
3	132-1644-01	1	Chamber-Front, Center
4	133-2240-01	1	Chamber-Front, Right Center
5	132-1647-01	1	Chamber-Front, Right
6	3230-10	28	Bolt-CARR
7	104-8300	28	Nut-HF, NI
8	133-2208-01	2	Angle-Deflector

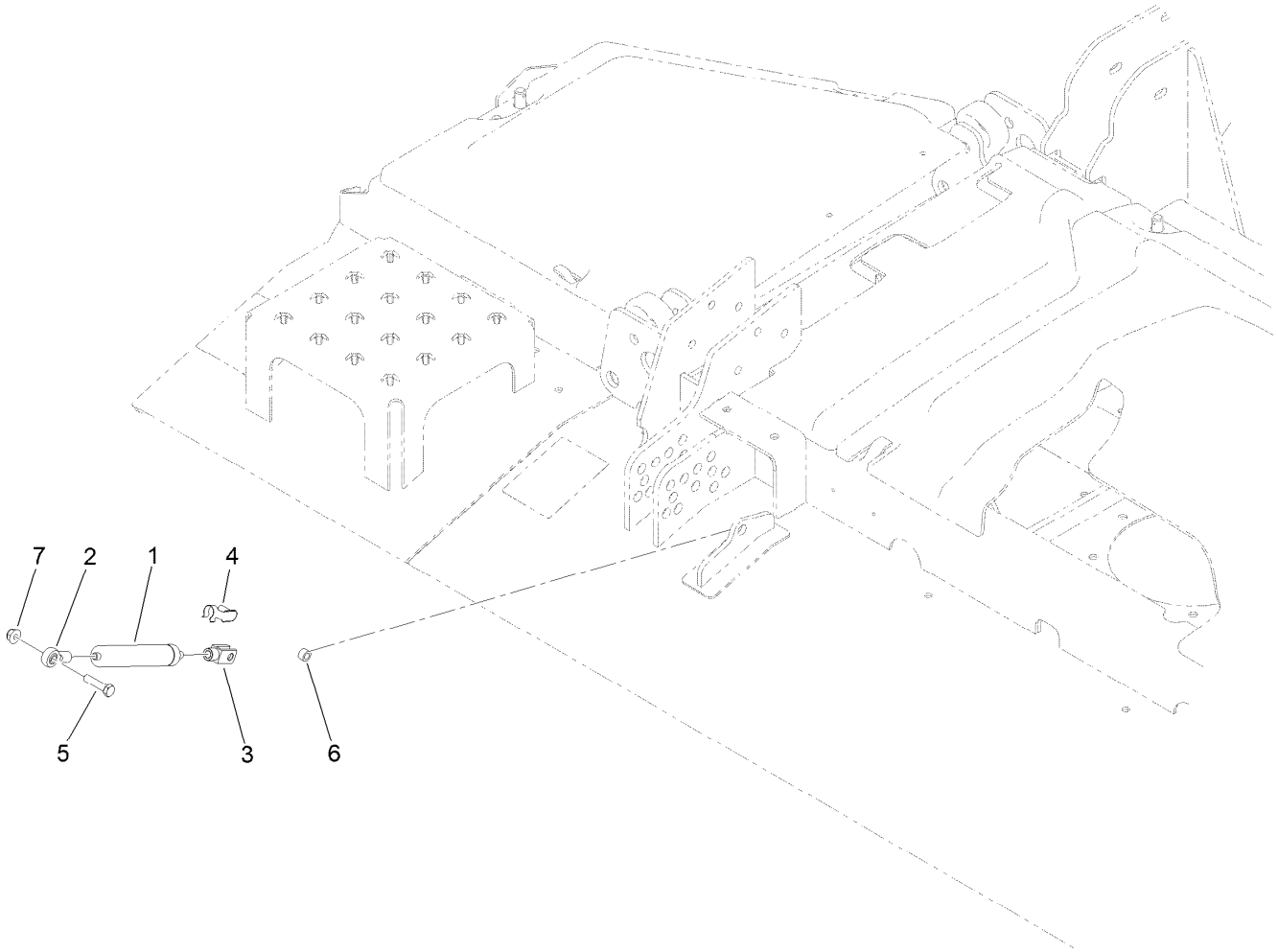

Center Front Deck Transport Damper Assembly

Ref.	*Part Number*	*Qty.*	*Description*
1	105-3249	1	Damper
2	104-8331	1	End-Rod, Spherical
3	115-5455	1	End-Rod, Clevis
4	115-5454	1	Pin-Spring
5	322-17	1	Screw-HH
6	115-2142	1	Spacer
7	104-8300	1	Nut-HF, NI

Left Hand Deck Connection Assembly

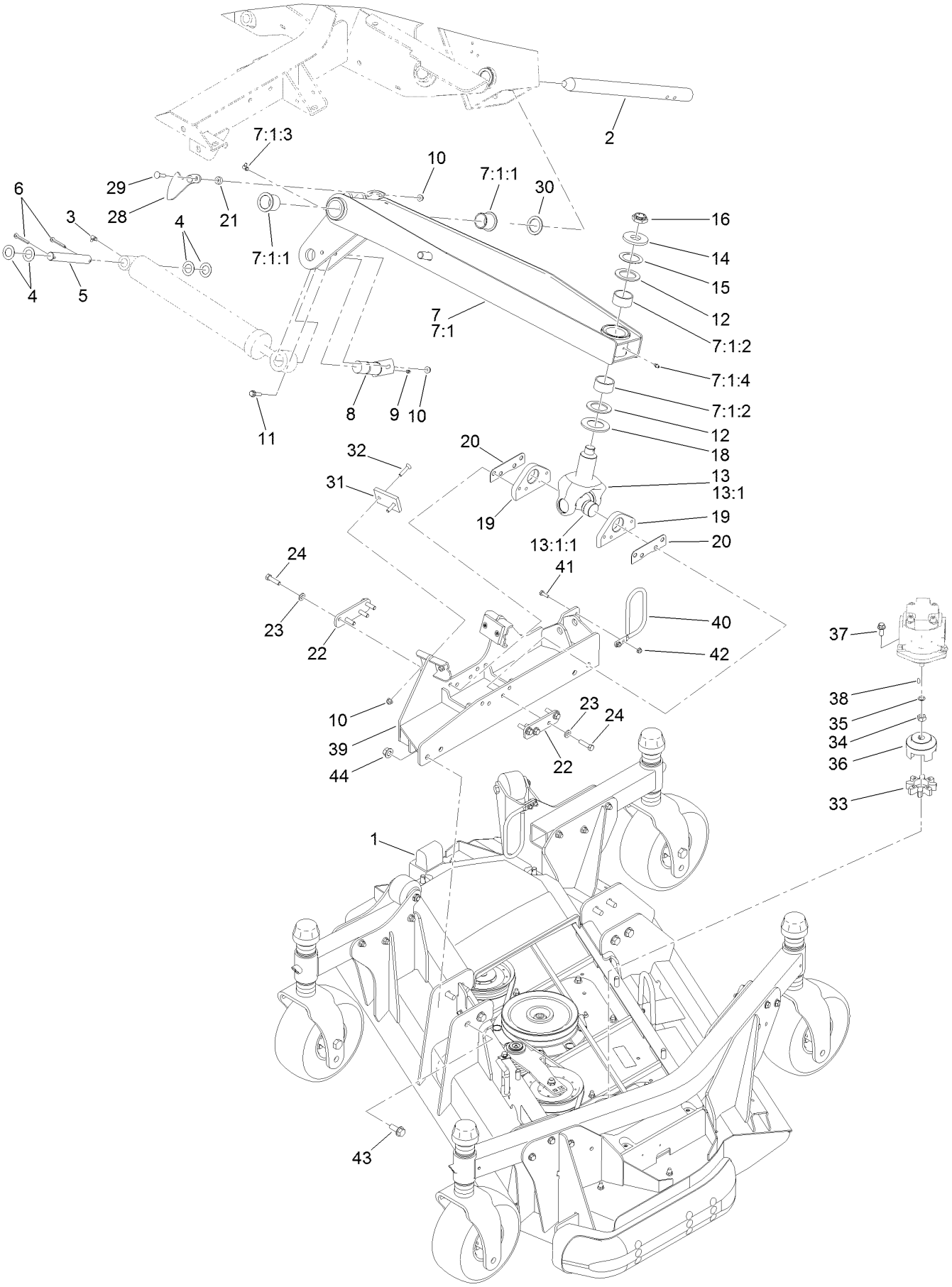

Left Hand Deck Connection Assembly (continued)

Ref.	Part Number	Qty.	Description
1		1	Left Deck ASM ●
2	121-3882	1	Shaft-Pivot, Lift Arm
3	302-60	1	Fitting-Grease
4	110-6767	4	Washer-Thrust
5	110-6006	1	Pin-Clevis
6	3272-30	2	Pin-Cotter
7	114-5660-01	1	LH Lift Arm ASM
7:1		1	Arm-Lift, LH ●
7:1:1	69-6470	2	Bushing-Caster
7:1:2	114-5596	2	Bushing-Straight
7:1:3	302-60	1	Fitting-Grease
7:1:4	302-5	1	Fitting-Grease
8	125-1912	1	Pin-Pivot
9	302-5	1	Fitting-Grease
10	104-8300	7	Nut-HF, NI
11	119-4036	1	Screw-HHF
12	104-0721	2	Washer-Thrust
13	114-5640-03	1	Joint Yoke ASM
13:1		1	Yoke-Joint ●
13:1:1	104-4299	1	Cross And Bearing Kit
14	104-0719	1	Washer-Hardened
15	114-5641	1	Washer-Thrust
16	116-1399	1	Locknut
18	104-0720	1	Spacer
19	115-8870-03	2	Mount-Base
20	104-0731	2	Shim
21	121-1759	2	Spacer
22	117-9419	2	Plate-Spacer
23	100-4852	8	Washer-Hardened
24	323-43	8	Screw-HH
28	112-7339	1	Plate-Sensing
29	3230-3	2	Screw-CARR
30	98-1452	1	Washer-Thrust
31	69-9290	2	Pad-Bumper
32	32108-103	4	Screw-FH
33	104-3542	1	Spider
34	110-8815	1	Nut-Hex
35	112-6957	1	Washer-Hardened
36	104-3541	1	Hub-Spider
37	3234-42	2	Screw-HHF
38	3257-3	1	Key-Woodruff
39	131-6013-01	1	Connection-Deck, LH
40	130-9161	1	Support-Hose
41	321-5	2	Screw-HH
42	104-7201	2	Nut-HF, NI
43	3234-38	8	Screw-HHF
44	99-5107	8	Nut-Lock

● Not serviced separately

Left Hand Deck Belt, Pulley and Spindle Assembly

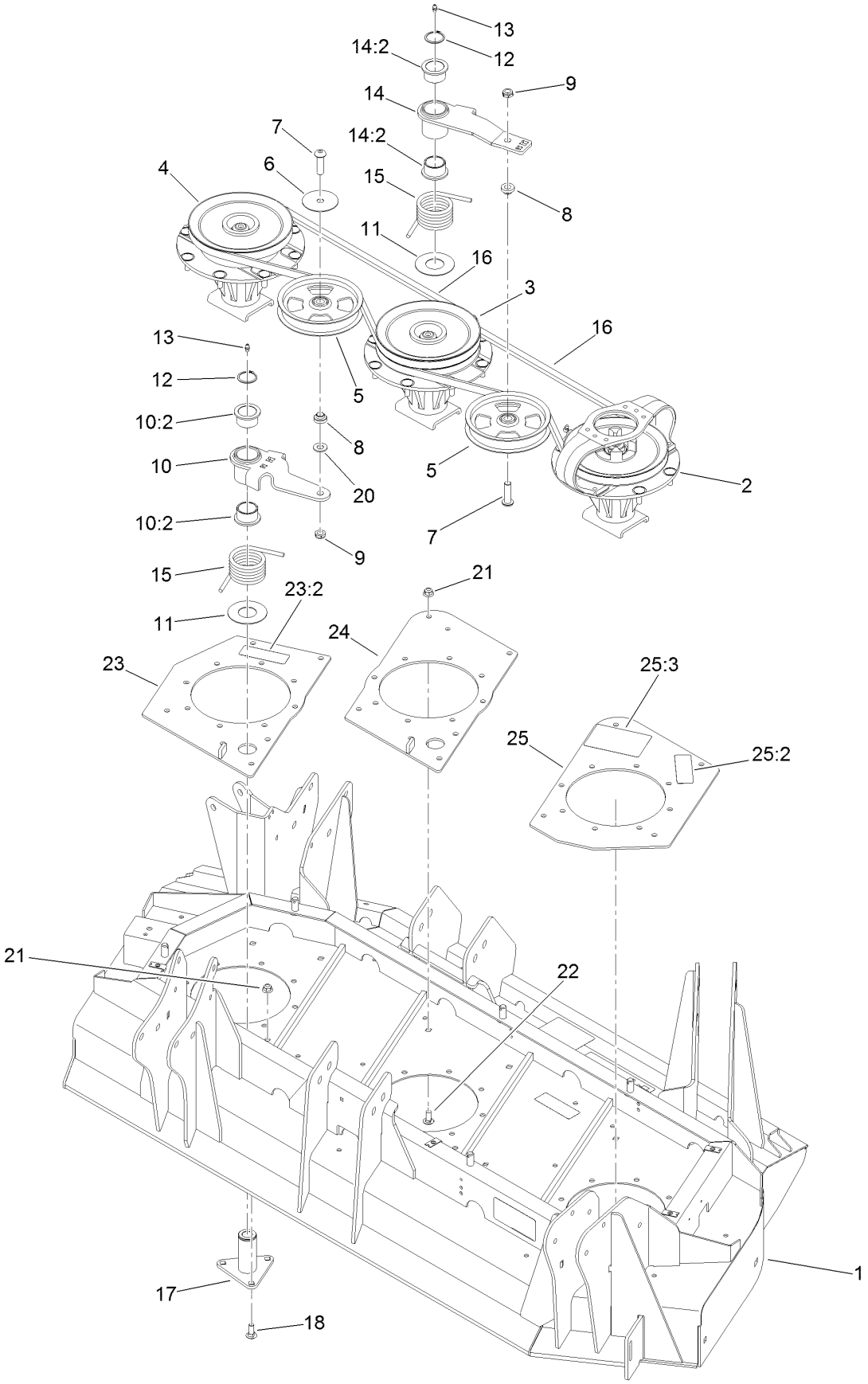

Left Hand Deck Belt, Pulley and Spindle Assembly (continued)

Ref.	Part Number	Qty.	Description
1	130-9271	1	Left Deck ASM
2	131-0768	1	Driving Spindle ASM
3	117-9234	1	Double Spindle ASM
4	117-9233	1	High Spindle ASM
5	132-9421	2	Pulley-Idler, Flat
6	100-3102	1	Washer-Flat
7	108-1993	2	Screw-HSBH
8	108-1924	2	Spacer-Idler
9	3296-45	2	Nut-Hex
10	117-9176	1	Idler Arm ASM
10:2	93-4510	2	Bushing-Caster
11	108-1926	2	Washer
12	32120-84	2	Ring-Snap, External
13	302-5	2	Fitting-Grease
14	108-1930	1	Idler Arm ASM
14:2	93-4510	2	Bushing-Caster
15	108-1921	2	Spring-Torsion
16	112-7377	2	Belt-V, B
17	114-0997	2	Pivot-Idler
18	3231-2	6	Bolt-CARR
20	3256-26	1	Washer-Flat
21	104-8301	16	Nut-HF, NI
22	3231-27	10	Screw-CARR
23	132-1621	1	Inner Spindle Plate ASM
23:2	117-4979	1	Decal-Warning
24	132-1622-01	1	Plate-Spindle, Center
25	132-1620	1	Outer Spindle Plate ASM
25:2	117-4979	1	Decal-Warning
25:3	114-4883	1	Decal-Belt Routing, Deck (LH)

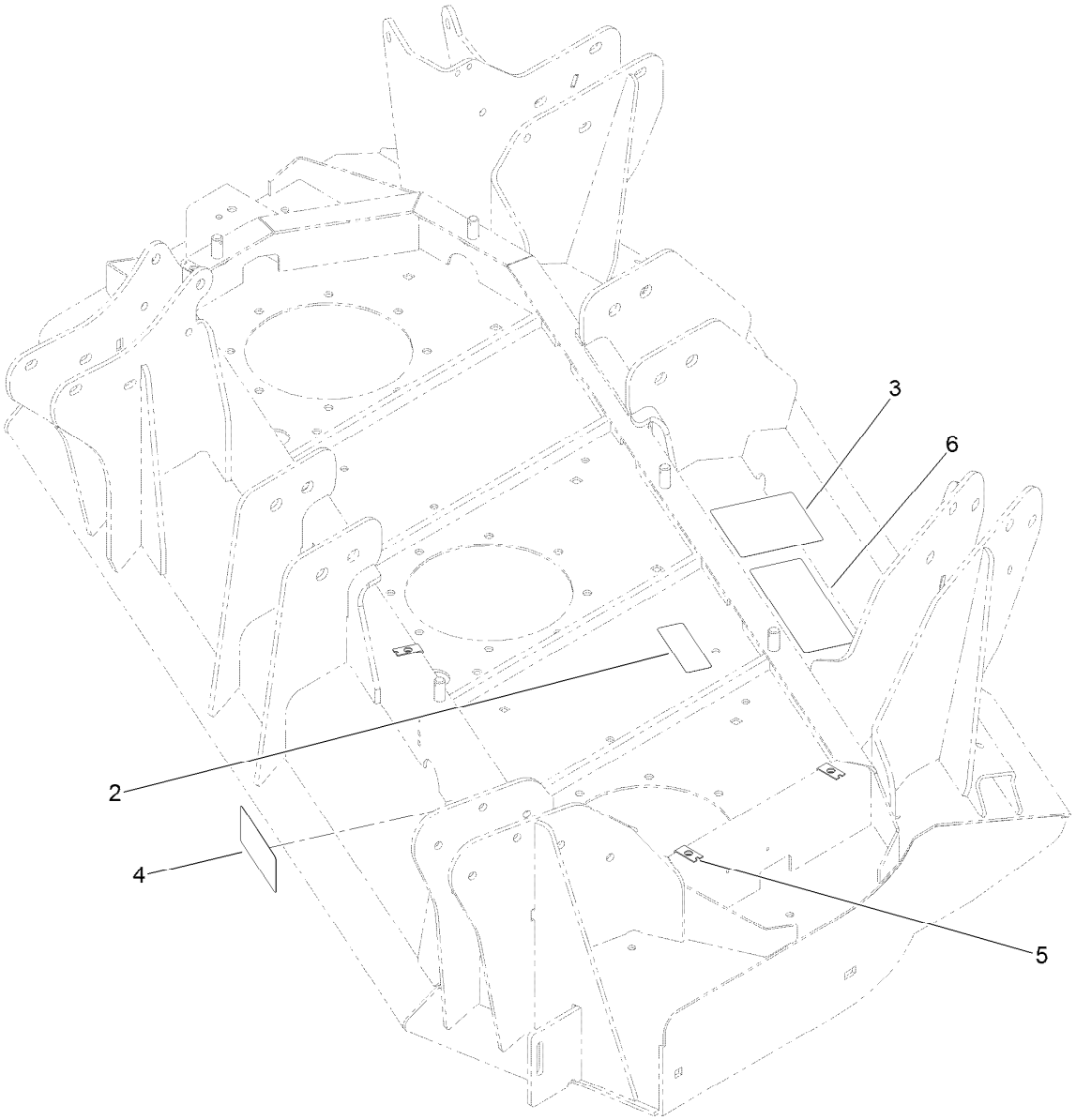

Left Hand Deck Decal Assembly No. 130-9271

Ref.	*Part Number*	*Qty.*	*Description*
2	117-4979	1	Decal-Warning
3	120-6604	1	Decal-Danger
4	93-7818	1	Decal-Torque, Blade Bolt
5	110-3510	4	Nut-Retainer
6	131-6027	1	Decal-HOC

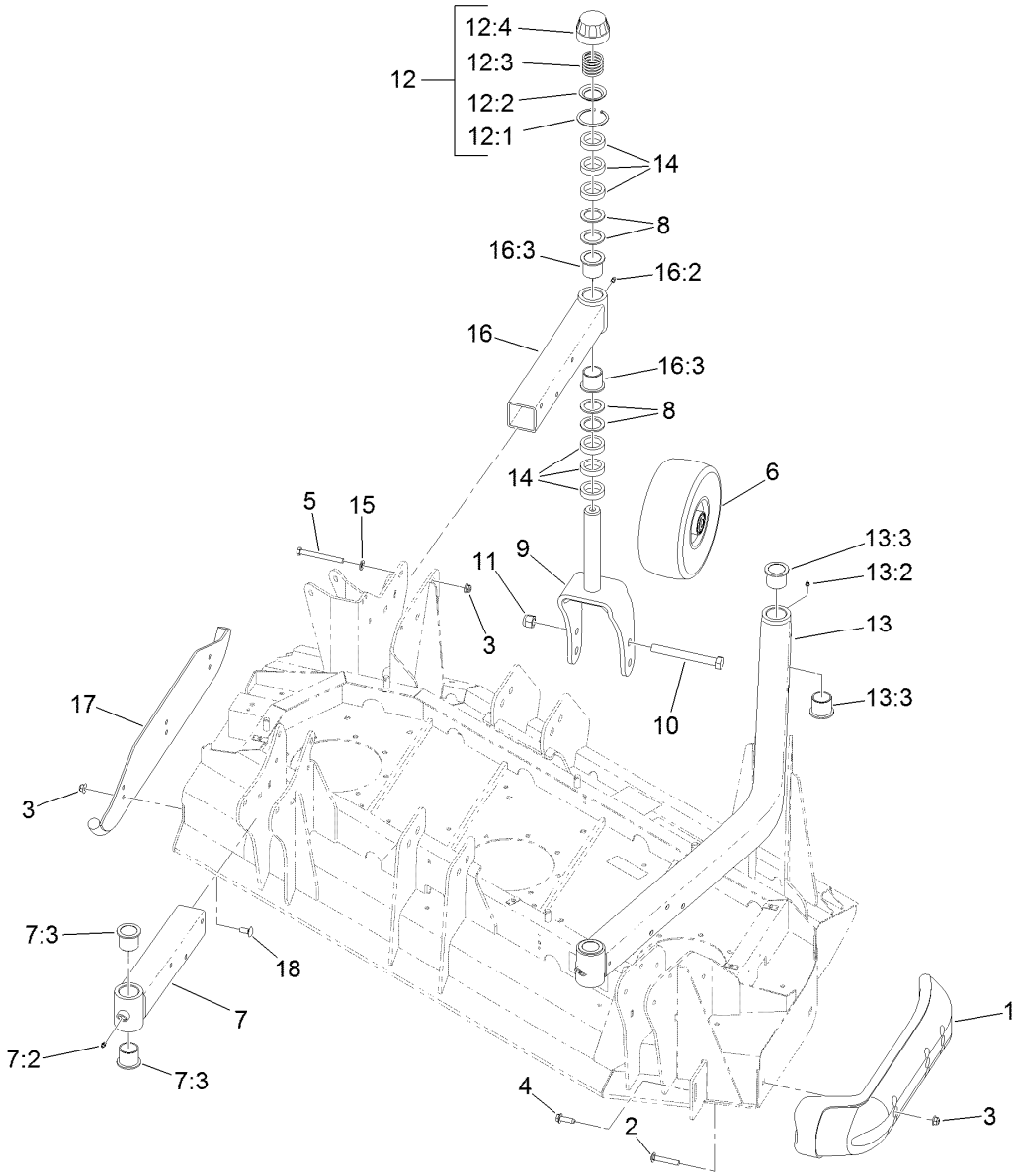

Left Hand Deck Skid and Caster Wheel Assembly

Ref.	Part Number	Qty.	Description
1	112-1479	1	Skid-Bumper, Deck
2	3231-33	2	Screw-CARR
3	104-8301	17	Nut-HF, NI
4	9136144	1	Screw-HWHTF
5	323-42	12	Screw-HH
6	93-4240	4	10 Inch Wheel ASM
7	131-6042	1	Caster Arm ASM
7:2	302-5	1	Fitting-Grease
7:3	69-6470	2	Bushing-Caster
8	69-6860	16	Washer-Thrust
9	130-7784-01	4	Fork-Caster
10	327-24	4	Screw-HH
11	3296-53	4	Nut-Lock, NI
12	92-9727	4	HOC Cap ASM

Ref.	Part Number	Qty.	Description
12:1	92-5581	1	Ring-Rtng,Snap,Int,Flat
12:2	92-5583	1	Washer-Cap
12:3	92-9726	1	Spring-Compression
12:4	92-8861	1	Cap-HOC
13	114-0953	1	HOC Castor Arm ASM
13:2	302-5	2	Fitting-Grease
13:3	69-6470	4	Bushing-Caster
14	69-1510	24	Spacer
15	3256-24	12	Washer-Plain
16	131-6047	1	Caster Arm ASM
16:2	302-5	1	Fitting-Grease
16:3	69-6470	2	Bushing-Caster
17	131-6034-01	1	Skid-Deck
18	3231-27	3	Screw-CARR

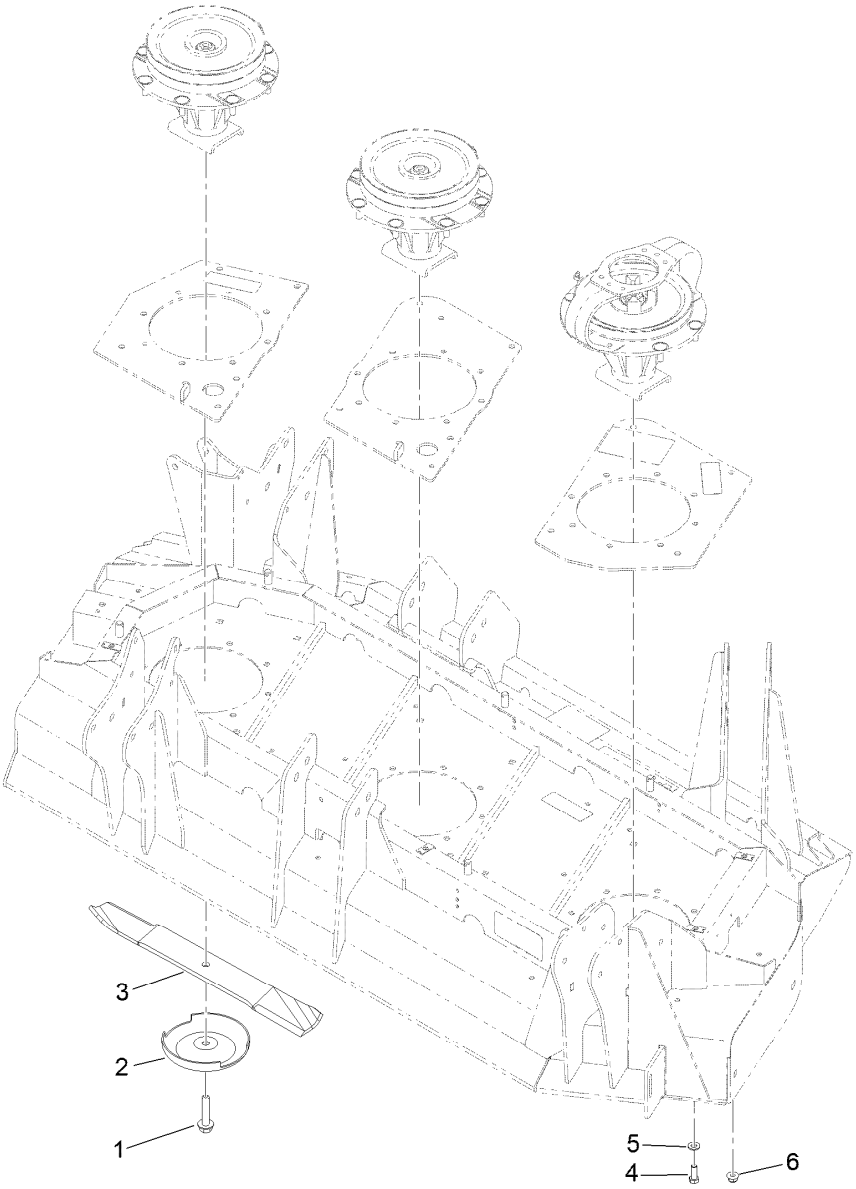

Left Hand Deck Blade Assembly

Ref.	Part Number	Qty.	Description
1	92-5816	3	Bolt-Blade
2	72-9361	3	Cup-Scalp, Anti
3	130-9151	3	Blade-20 In
4	323-6	4	Screw-HH
5	3256-24	4	Washer-Plain
6	104-8301	20	Nut-HF, NI

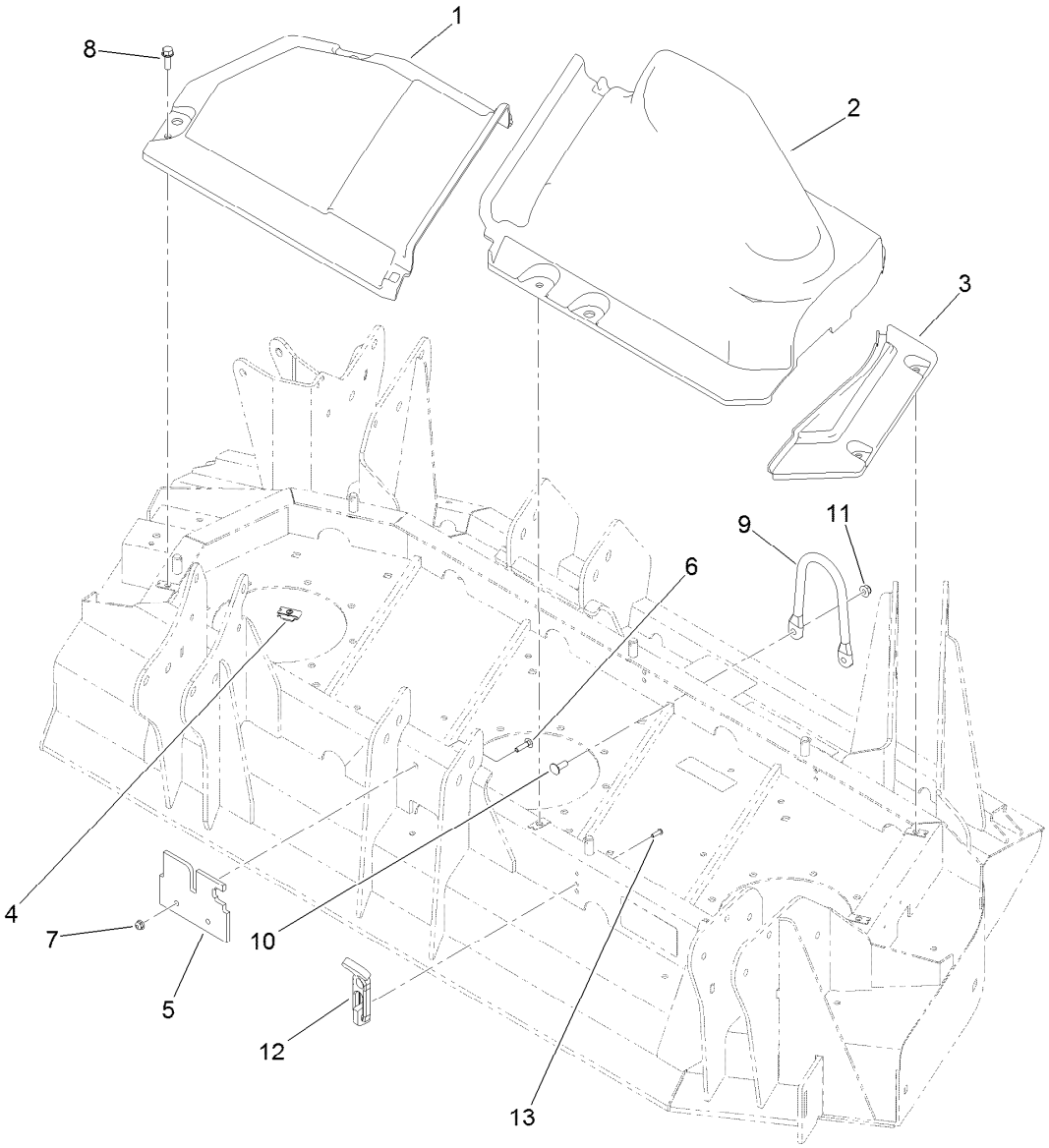

Left Hand Deck Belt Cover Assembly

Ref.	Part Number	Qty.	Description
1	114-5633	1	Cover-Deck, LH Wing (Inside)
2	114-5634	1	Cover-Deck, LH Wing (Outside)
3	114-5637	1	Cover-Deck, LH Wing (Fixed)
4	110-3510	4	Nut-Retainer
5	115-3363	1	Deflector-Debris, Side Deck
6	3229-2	2	Screw-CARR
7	104-7201	2	Nut-HF, NI
8	3234-29	4	Screw-HHF
9	115-3362	1	Guide-Hose
10	3230-10	2	Bolt-CARR
11	104-8300	2	Nut-HF, NI
12	103-4080	4	Latch-Rubber
13	3274-39	8	Screw-HSBH

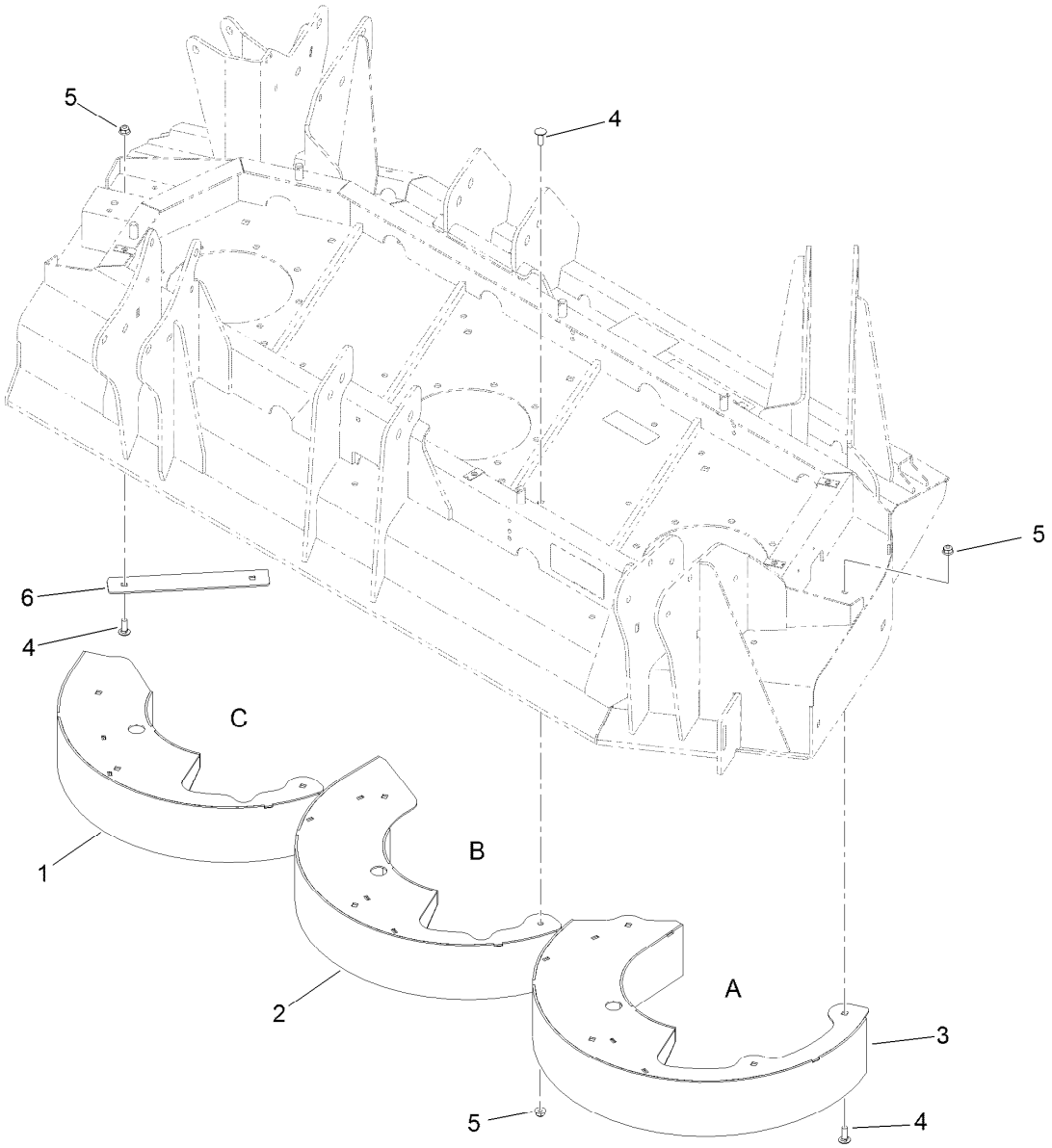

Left Hand Deck Chamber Assembly

Ref.	*Part Number*	*Qty.*	*Description*
1	132-1600-01	1	Chamber-Inner, Left
2	131-6005-01	1	Chamber-Center, Left
3	131-6001-01	1	Chamber-Outer, Left
4	3230-10	12	Bolt-CARR
5	104-8300	12	Nut-HF, NI
6	133-2248-01	1	Deflector-LH

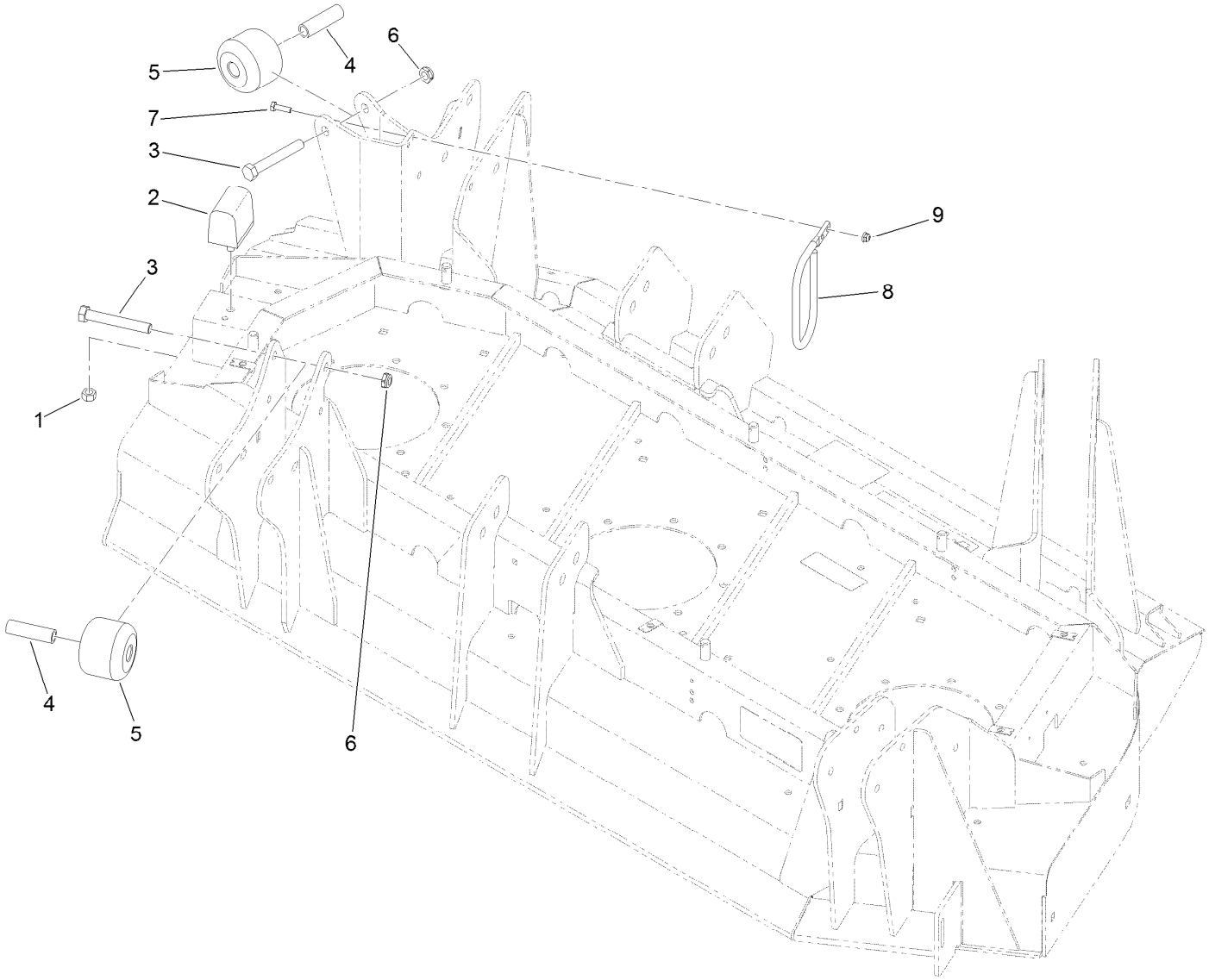

Left Hand Deck Stop Assembly

Ref.	*Part Number*	*Qty.*	*Description*
1	33025-00	1	Nut-Lock, NI
2	87-3470	1	Bumper
3	325-14	2	Screw-HH
4	115-2144	2	Tube-Spacer
5	115-3366	2	Roller
6	3296-45	2	Nut-Hex
7	321-5	2	Screw-HH
8	130-9161	1	Support-Hose
9	104-7201	2	Nut-HF, NI

Left Hand Deck Impact Arm and Limit Switch Assembly

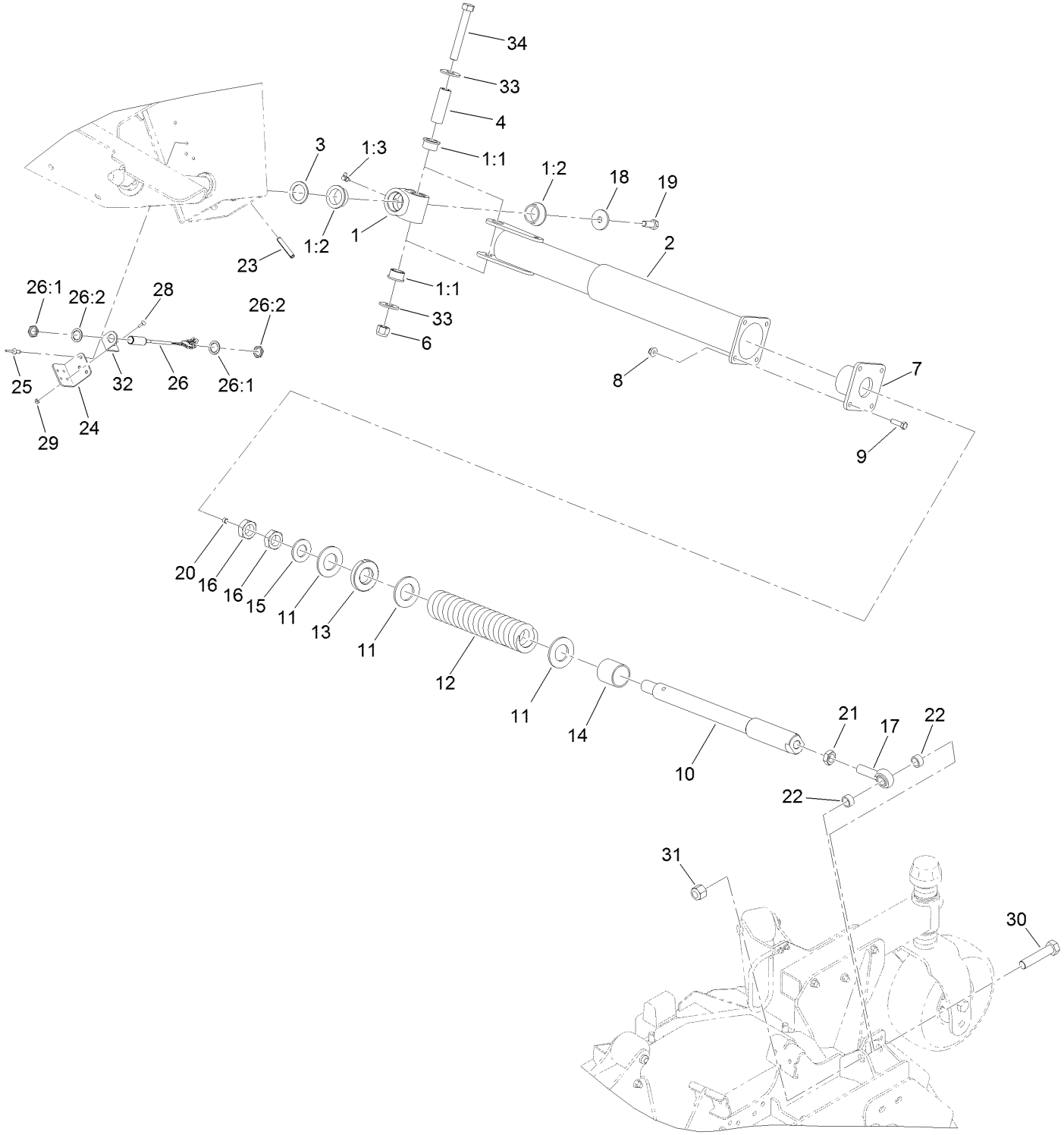

Left Hand Deck Impact Arm and Limit Switch Assembly (continued)

Ref.	Part Number	Qty.	Description
1	115-5468	1	Pivot Hub ASM
1:1	115-5469	2	Bushing-Flange
1:2	114-5680	2	Bushing-Flange
1:3	302-60	1	Fitting-Grease
2	112-7330-03	1	Arm-Impact, Rear
3	98-1452	1	Washer-Thrust
4	94-6604	1	Tube-Spacer
6	3296-53	1	Nut-Lock, NI
7	114-5677-03	1	Housing
8	104-8301	4	Nut-HF, NI
9	323-7	4	Screw-HH
10	117-9404	1	Shaft-Spring
11	114-5986	3	Washer-Plain
12	114-5993	1	Spring-Compression
13	114-5992	1	Bearing-Plastic
14	114-5989	1	Bushing-Plain
15	3256-62	1	Washer-Flat
16	3220-9	2	Nut-Jam
17	105-2806	1	End-Rod
18	106-2008	1	Washer-Thrust
19	325-5	1	Screw-HH
20	285-17	1	Plug-Pipe
21	3220-7	1	Nut-Jam
22	74-3730	2	Spacer-Spindle, Rear
23	117-5479	2	Pin-Spring
24	133-2236	1	Bracket-Support
25	3290-412	3	Rivet-Blind
26	115-5300	1	Proximity Switch ASM
26:1	117-3207	2	Nut-Hex
26:2	117-3208	2	Washer-Lock, Internal Tooth
28	3229-34	2	Screw-CARR
29	3296-2	2	Nut-Lock, NI
30	328-5	1	Screw-HH
31	3296-51	1	Nut-Lock, NI
32	133-2235	1	Bracket-Sensor, Side
33	3256-7	2	Washer-Flat
34	327-23	1	Screw-HH

Left Hand Deck Transport Lock Assembly

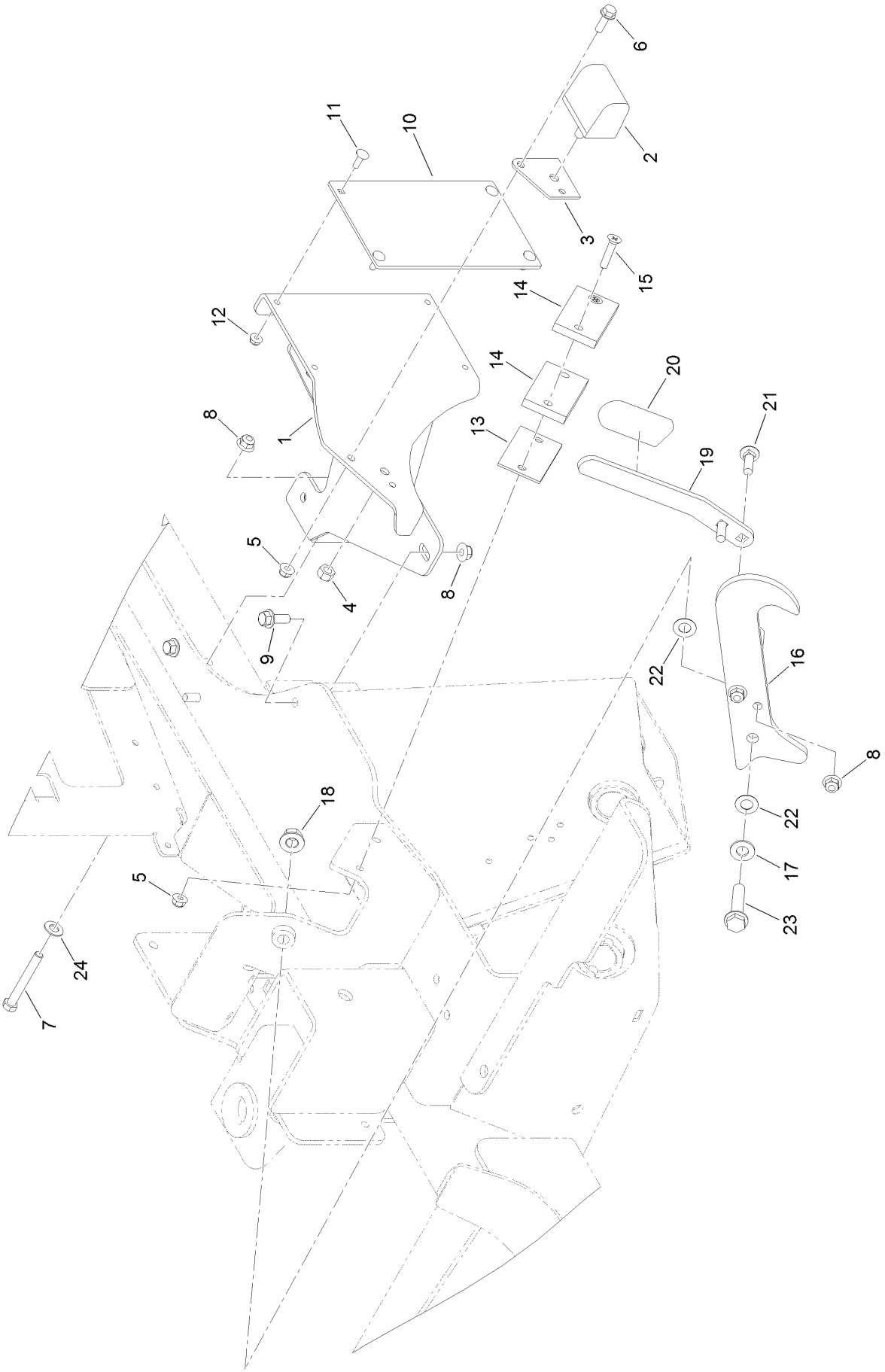

Left Hand Deck Transport Lock Assembly (continued)

Ref.	Part Number	Qty.	Description
1	119-8275-01	1	Pad-Transport, LH
2	87-3470	1	Bumper
3	115-8826	1	Shim-Bumper
4	33025-00	1	Nut-Lock, NI
5	104-8300	3	Nut-HF, NI
6	3234-17	1	Screw-HHF
7	323-14	1	Screw-HH
8	104-8301	5	Nut-HF, NI
9	3234-42	2	Screw-HHF
10	117-5476	1	Pad-Roller
11	1-807512	4	Bolt-CARR
12	104-7201	4	Nut-HF, NI
13	114-5675	1	Shim-Pad
14	69-9300	2	Pad-Bumper
15	32108-107	2	Screw-FH
16	119-7723-03	1	Latch-Wing
17	3256-26	1	Washer-Flat
18	99-5107	1	Nut-Lock
19	114-5659-03	1	Handle-Latch
20	119-1846	1	Grip
21	3231-25	2	Bolt-CARR
22	104-3577	2	Washer
23	3234-46	1	Screw-HHF
24	52-2861	1	Washer

Right Hand Deck Connection Assembly

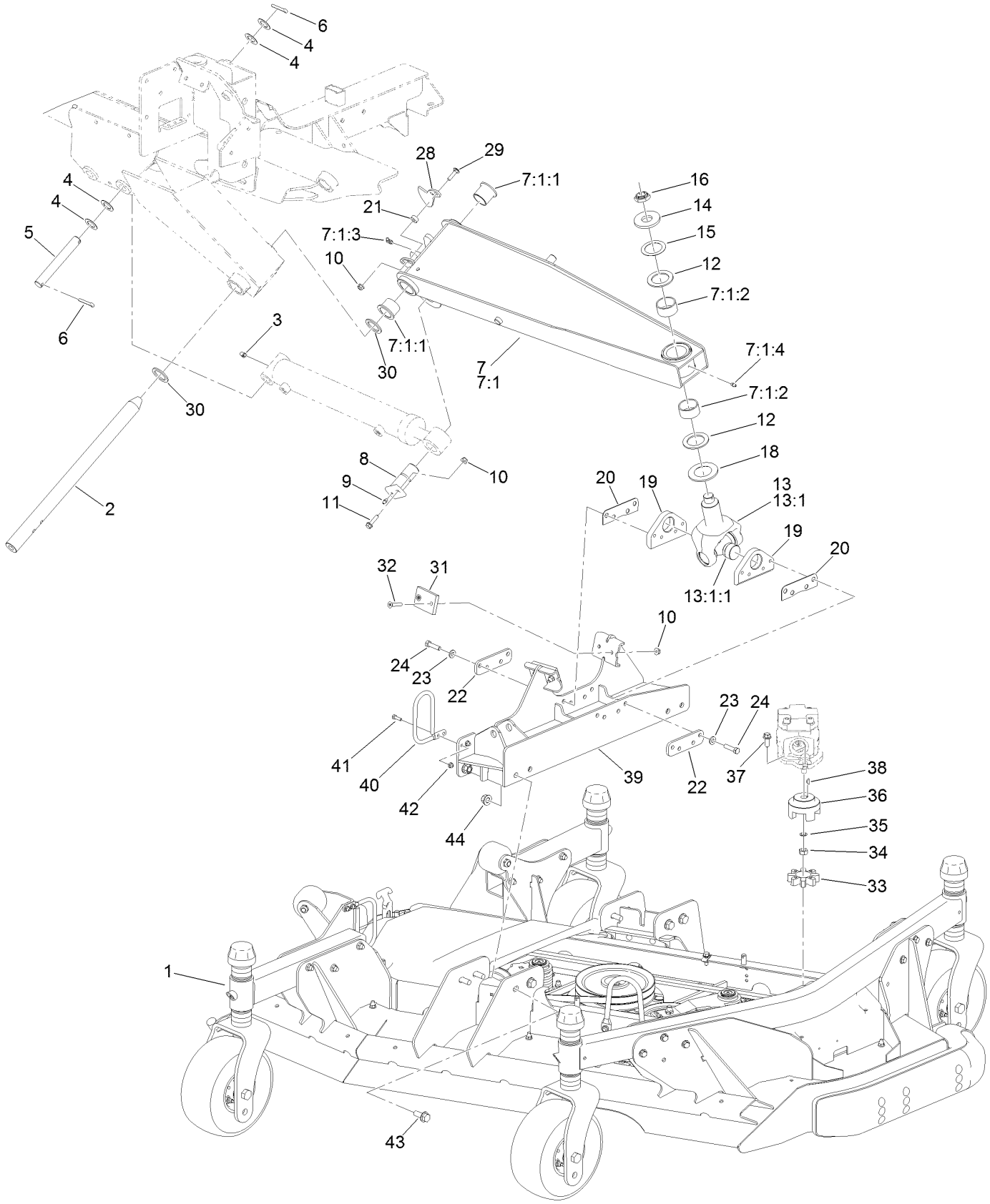

Right Hand Deck Connection Assembly (continued)

Ref.	Part Number	Qty.	Description
1		1	Right Deck ASM ●
2	121-3882	1	Shaft-Pivot, Lift Arm
3	302-60	1	Fitting-Grease
4	110-6767	4	Washer-Thrust
5	110-6006	1	Pin-Clevis
6	3272-30	2	Pin-Cotter
7	114-5650-01	1	RH Lift Arm ASM
7:1		1	Arm-Lift, RH ●
7:1:1	69-6470	2	Bushing-Caster
7:1:2	114-5596	2	Bushing-Straight
7:1:3	302-60	1	Fitting-Grease
7:1:4	302-5	1	Fitting-Grease
8	125-1912	1	Pin-Pivot
9	302-5	1	Fitting-Grease
10	104-8300	7	Nut-HF, NI
11	119-4036	1	Screw-HHF
12	104-0721	2	Washer-Thrust
13	114-5640-03	1	Joint Yoke ASM
13:1		1	Yoke-Joint ●
13:1:1	104-4299	1	Cross And Bearing Kit
14	104-0719	1	Washer-Hardened
15	114-5641	1	Washer-Thrust
16	116-1399	1	Locknut
18	104-0720	1	Spacer
19	115-8870-03	2	Mount-Base
20	104-0731	2	Shim
21	121-1759	2	Spacer
22	117-9419	2	Plate-Spacer
23	100-4852	8	Washer-Hardened
24	323-43	8	Screw-HH
28	112-7339	1	Plate-Sensing
29	3230-3	2	Screw-CARR
30	98-1452	1	Washer-Thrust
31	69-9290	2	Pad-Bumper
32	32108-103	4	Screw-FH
33	104-3542	1	Spider
34	110-8815	1	Nut-Hex
35	112-6957	1	Washer-Hardened
36	104-3541	1	Hub-Spider
37	3234-42	2	Screw-HHF
38	3257-3	1	Key-Woodruff
39	131-6012-01	1	Connection-Deck, RH
40	130-9161	1	Support-Hose
41	321-5	2	Screw-HH
42	104-7201	2	Nut-HF, NI
43	3234-38	8	Screw-HHF
44	99-5107	8	Nut-Lock

● Not serviced separately

Right Hand Deck Belt, Pulley and Spindle Assembly

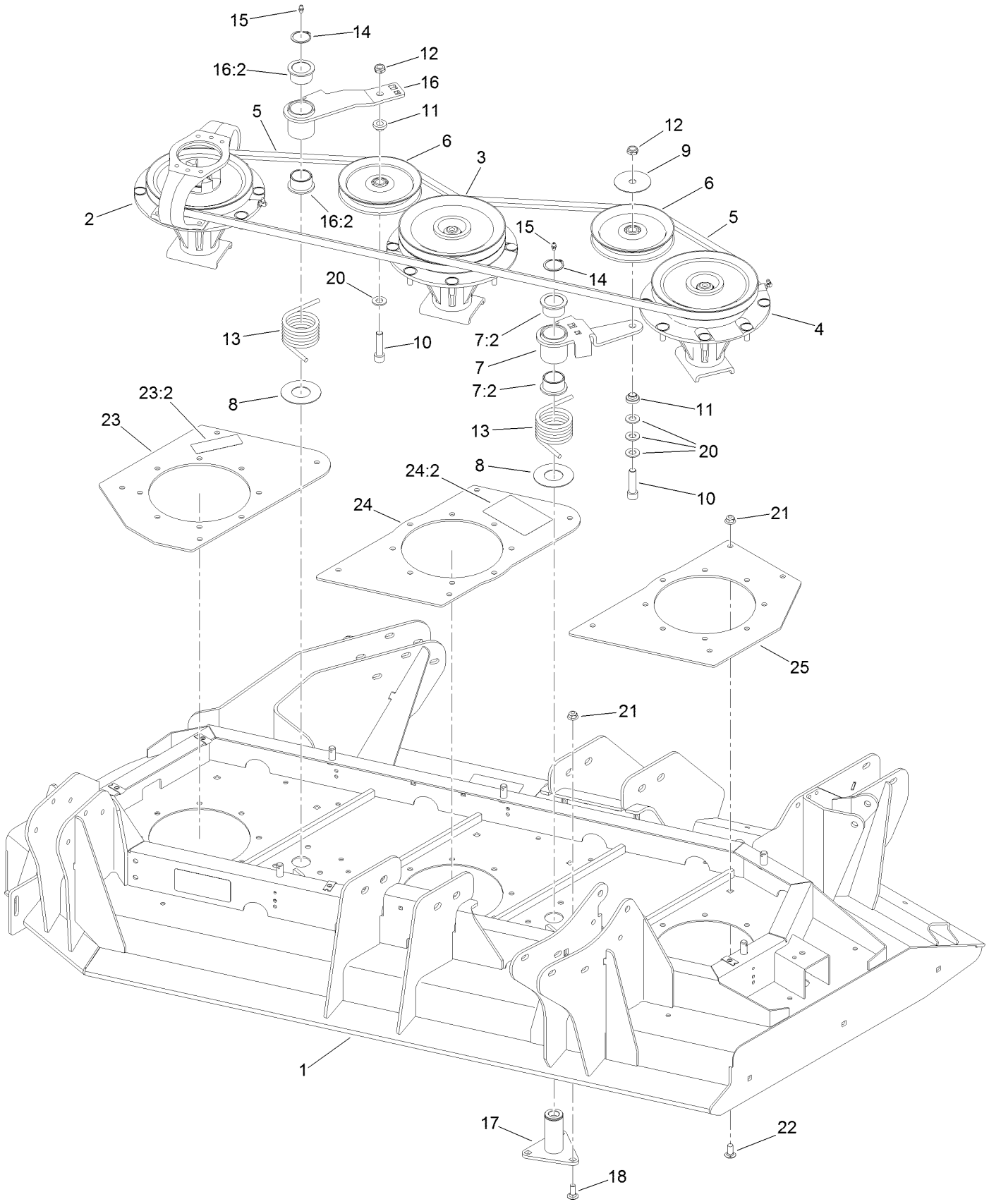

Right Hand Deck Belt, Pulley and Spindle Assembly (continued)

Ref.	Part Number	Qty.	Description
1	130-9241	1	Right Deck ASM
2	131-0768	1	Driving Spindle ASM
3	117-9234	1	Double Spindle ASM
4	117-9233	1	High Spindle ASM
5	112-7377	2	Belt-V, B
6	01-268-0160	2	Pulley-Idler
7	117-9176	1	Idler Arm ASM
7:2	93-4510	2	Bushing-Caster
8	108-1926	2	Washer
9	100-3102	1	Washer-Flat
10	3274-5	2	Screw-HSH
11	108-1924	2	Spacer-Idler
12	3296-45	2	Nut-Hex
13	108-1921	2	Spring-Torsion
14	32120-84	2	Ring-Snap, External
15	302-5	2	Fitting-Grease
16	108-1930	1	Idler Arm ASM
16:2	93-4510	2	Bushing-Caster
17	114-0997	2	Pivot-Idler
18	3231-2	6	Bolt-CARR
20	3256-26	4	Washer-Flat
21	104-8301	18	Nut-HF, NI
22	3231-27	12	Screw-CARR
23	132-1617	1	Outer Spindle Plate ASM
23:2	117-4979	1	Decal-Warning
24	132-1618	1	Center Spindle Plate ASM
24:2	114-0974	1	Decal-Belt Routing, Deck (RH)
25	132-1615-01	1	Plate-Spindle, Inner

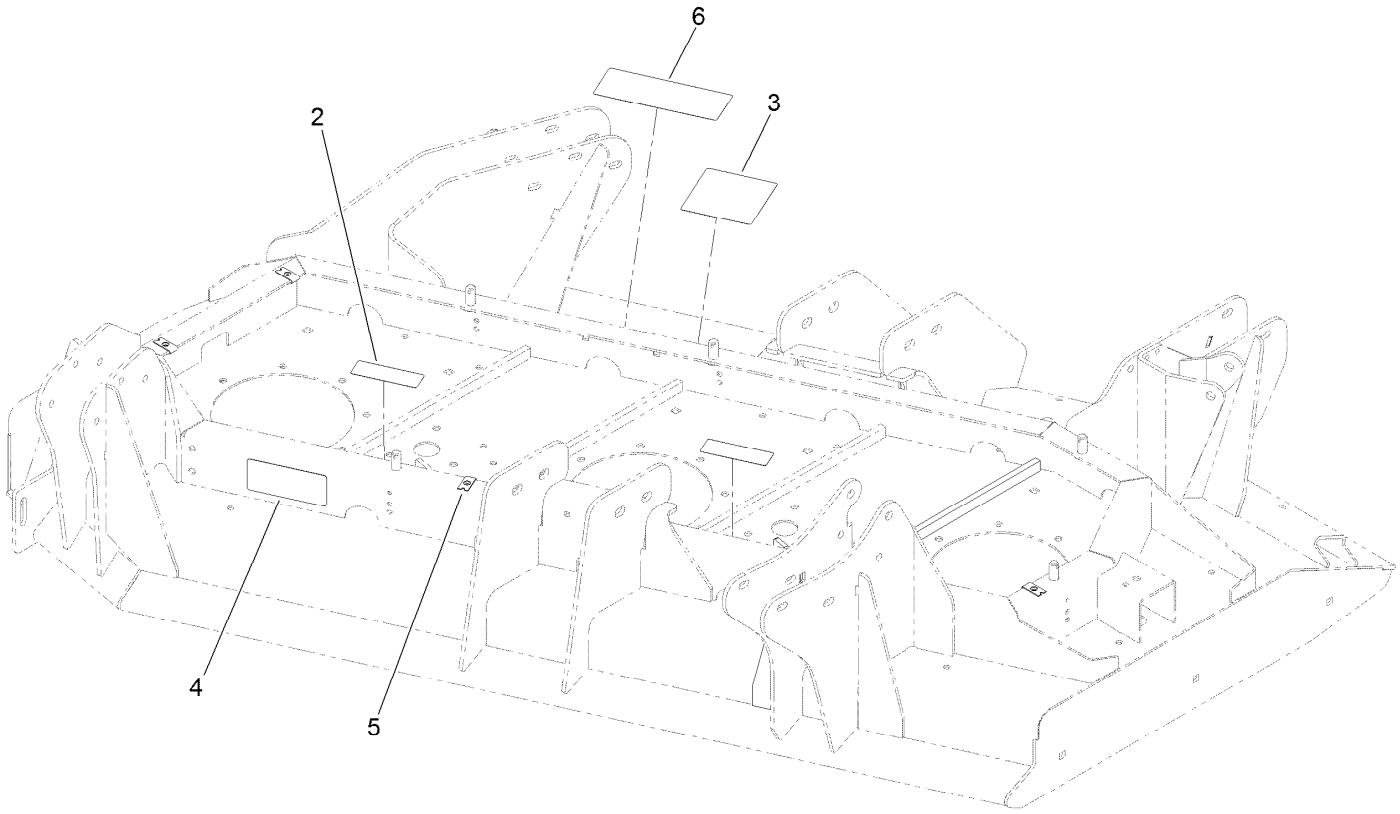

Right Hand Deck Decal Assembly No. 130-9241

Ref.	*Part Number*	*Qty.*	*Description*
2	117-4979	2	Decal-Warning
3	120-6604	1	Decal-Danger
4	93-7818	1	Decal-Torque, Blade Bolt
5	110-3510	4	Nut-Retainer
6	131-6027	1	Decal-HOC

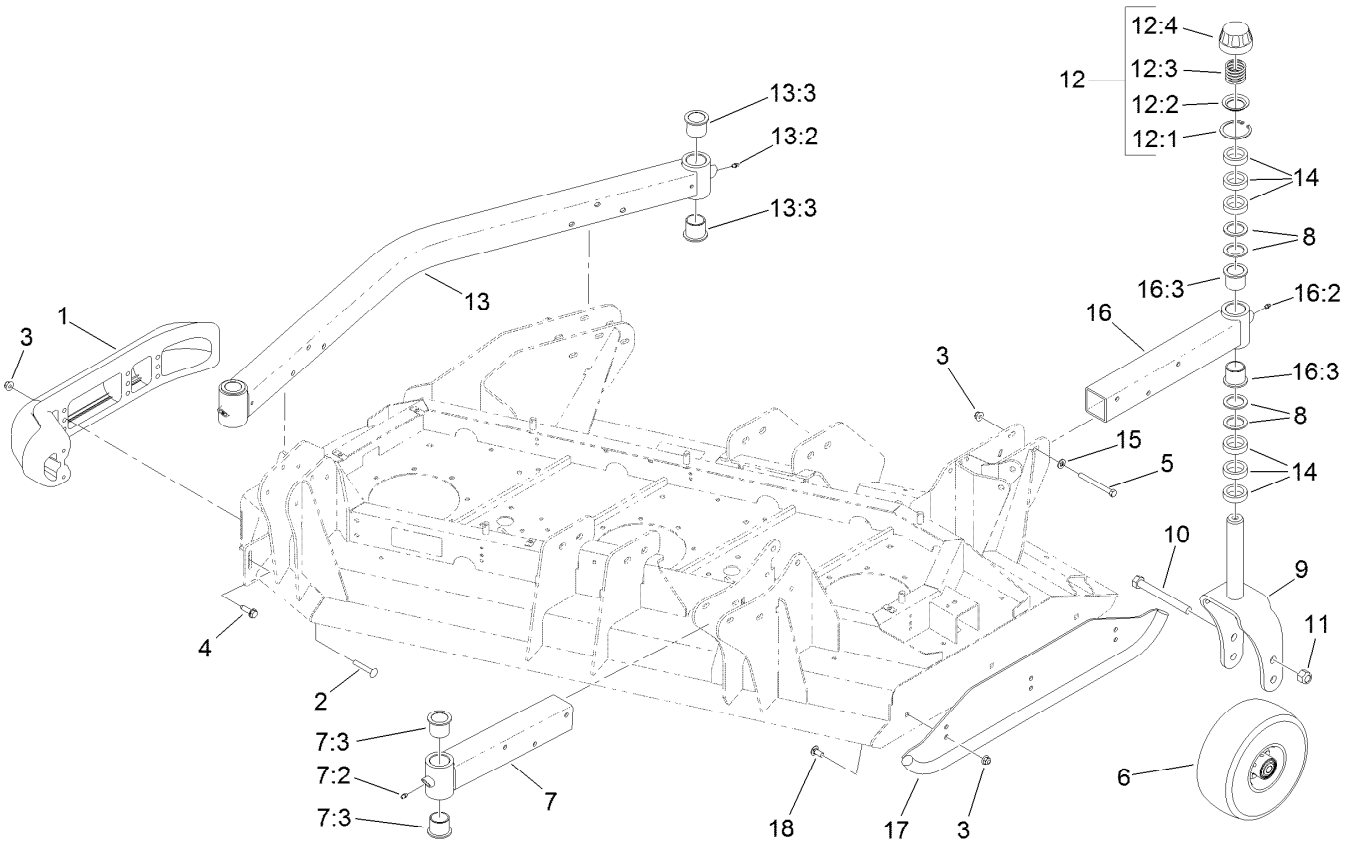

Right Hand Deck Roller, Skid and Caster Wheel Assembly

Ref.	Part Number	Qty.	Description
1	112-1479	1	Skid-Bumper, Deck
2	3231-33	2	Screw-CARR
3	104-8301	17	Nut-HF, NI
4	9136144	1	Screw-HWHTF
5	323-42	12	Screw-HH
6	93-4240	4	10 Inch Wheel ASM
7	131-6042	1	Caster Arm ASM
7:2	302-5	1	Fitting-Grease
7:3	69-6470	2	Bushing-Caster
8	69-6860	16	Washer-Thrust
9	130-7784-01	4	Fork-Caster
10	327-24	4	Screw-HH
11	3296-53	4	Nut-Lock, NI
12	92-9727	4	HOC Cap ASM

Ref.	Part Number	Qty.	Description
12:1	92-5581	1	Ring-Rtng,Snap,Int,Flat
12:2	92-5583	1	Washer-Cap
12:3	92-9726	1	Spring-Compression
12:4	92-8861	1	Cap-HOC
13	114-0953	1	HOC Castor Arm ASM
13:2	302-5	2	Fitting-Grease
13:3	69-6470	4	Bushing-Caster
14	69-1510	24	Spacer
15	3256-24	12	Washer-Plain
16	131-6047	1	Caster Arm ASM
16:2	302-5	1	Fitting-Grease
16:3	69-6470	2	Bushing-Caster
17	131-6034-01	1	Skid-Deck
18	3231-27	3	Screw-CARR

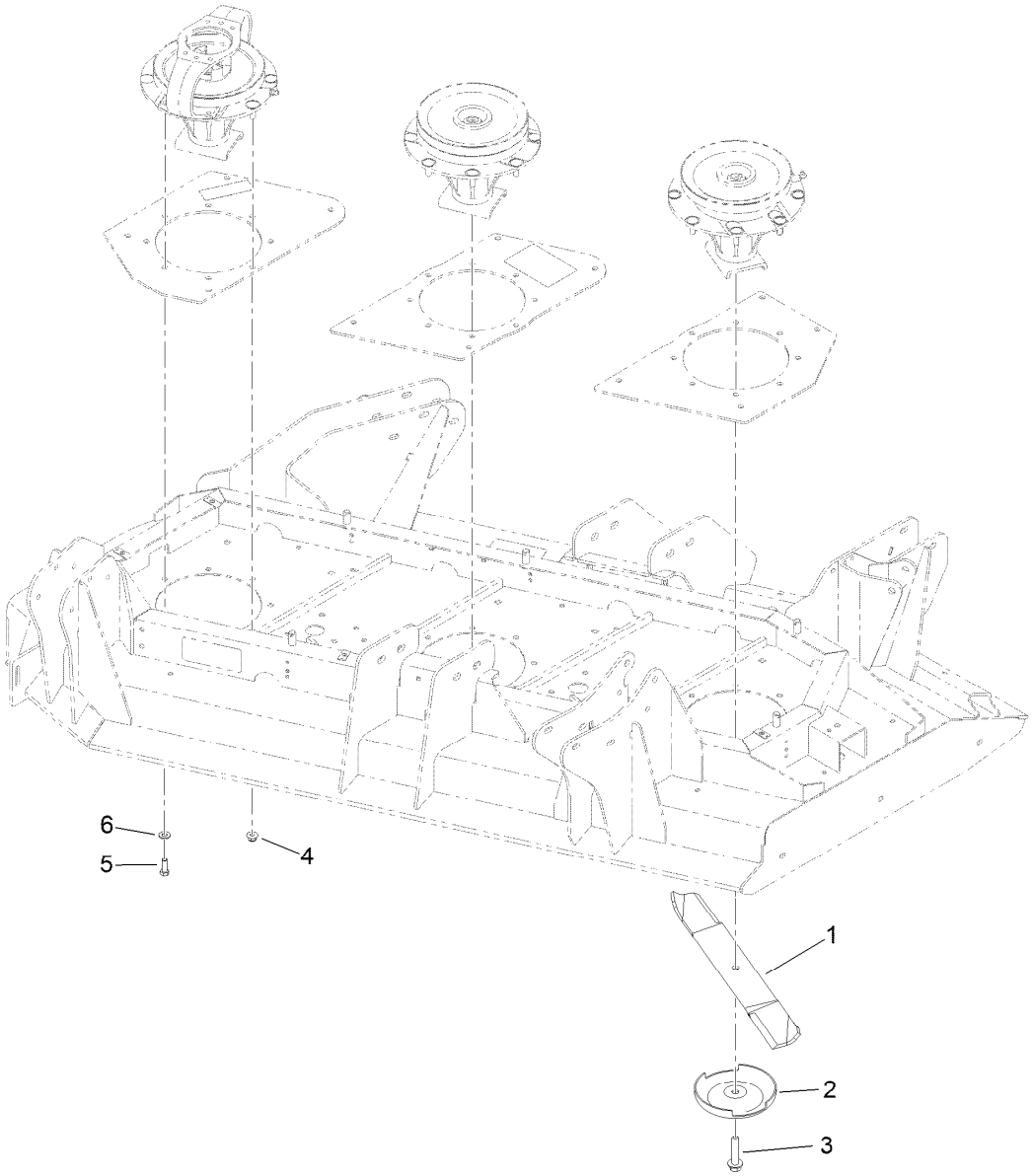

Right Hand Deck Blade Assembly

Ref.	Part Number	Qty.	Description
1	130-9151	3	Blade-20 In
2	72-9361	3	Cup-Scalp, Anti
3	92-5816	3	Bolt-Blade
4	104-8301	20	Nut-HF, NI
5	323-6	4	Screw-HH
6	3256-24	4	Washer-Plain

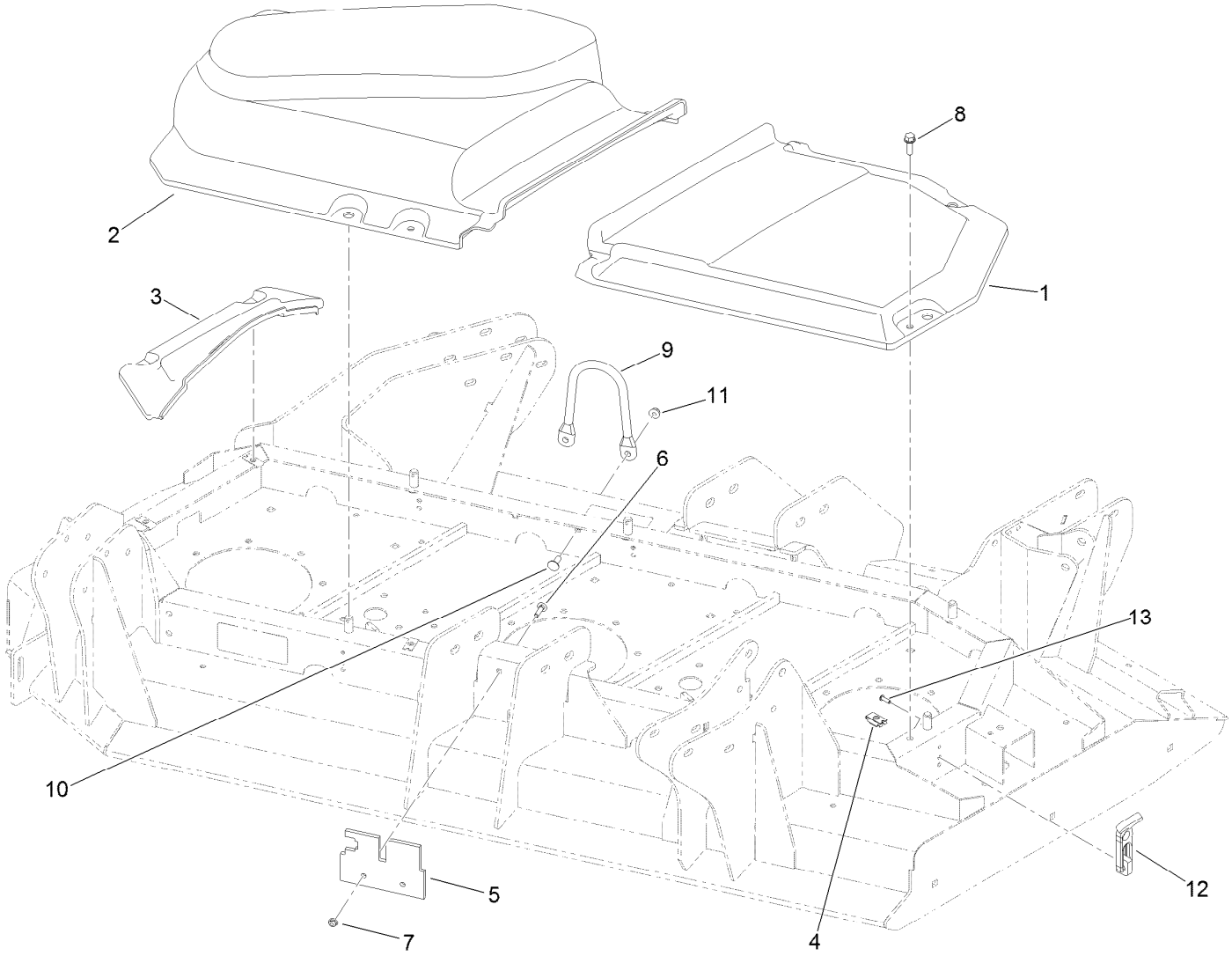

Right Hand Deck Belt Cover Assembly

Ref.	*Part Number*	*Qty.*	*Description*
1	114-5635	1	Cover-Deck, RH Wing (Inside)
2	114-5636	1	Cover-Deck, RH Wing (Outside)
3	114-5638	1	Cover-Deck, RH Wing (Fixed)
4	110-3510	4	Nut-Retainer
5	115-3363	1	Deflector-Debris, Side Deck
6	3229-2	2	Screw-CARR
7	104-7201	2	Nut-HF, NI
8	3234-29	4	Screw-HHF
9	115-3362	1	Guide-Hose
10	3230-10	2	Bolt-CARR
11	104-8300	2	Nut-HF, NI
12	103-4080	4	Latch-Rubber
13	3274-39	8	Screw-HSBH

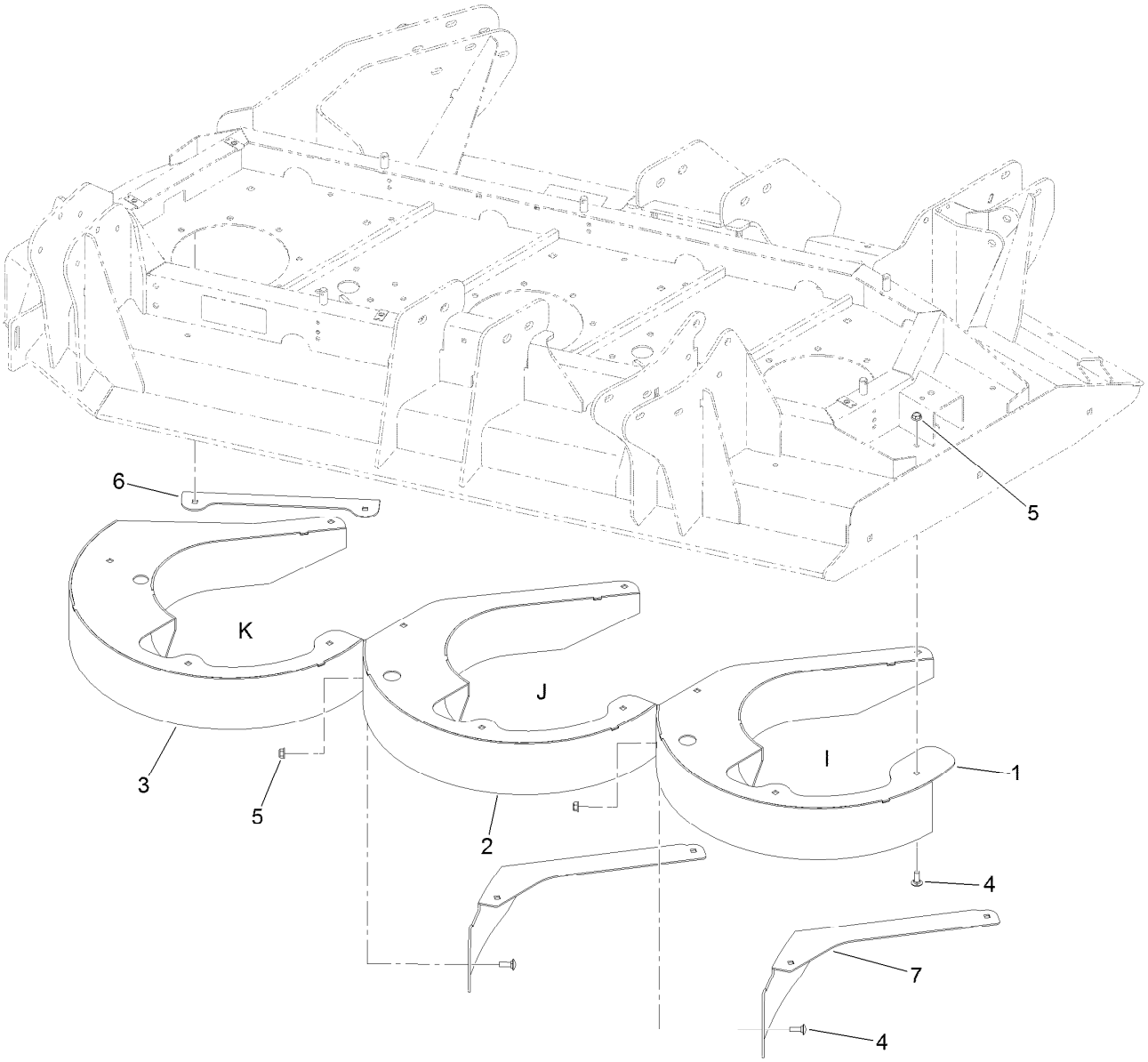

Right Hand Deck Chamber Assembly

Ref.	*Part Number*	*Qty.*	*Description*
1	132-1637-01	1	Chamber-Inner, Right
2	132-1634-01	1	Chamber-Center, Right
3	132-1630-01	1	Chamber-Outer, Right
4	3230-10	20	Bolt-CARR
5	104-8300	20	Nut-HF, NI
6	133-2249-01	1	Deflector-RH
7	133-2205-01	2	Deflector

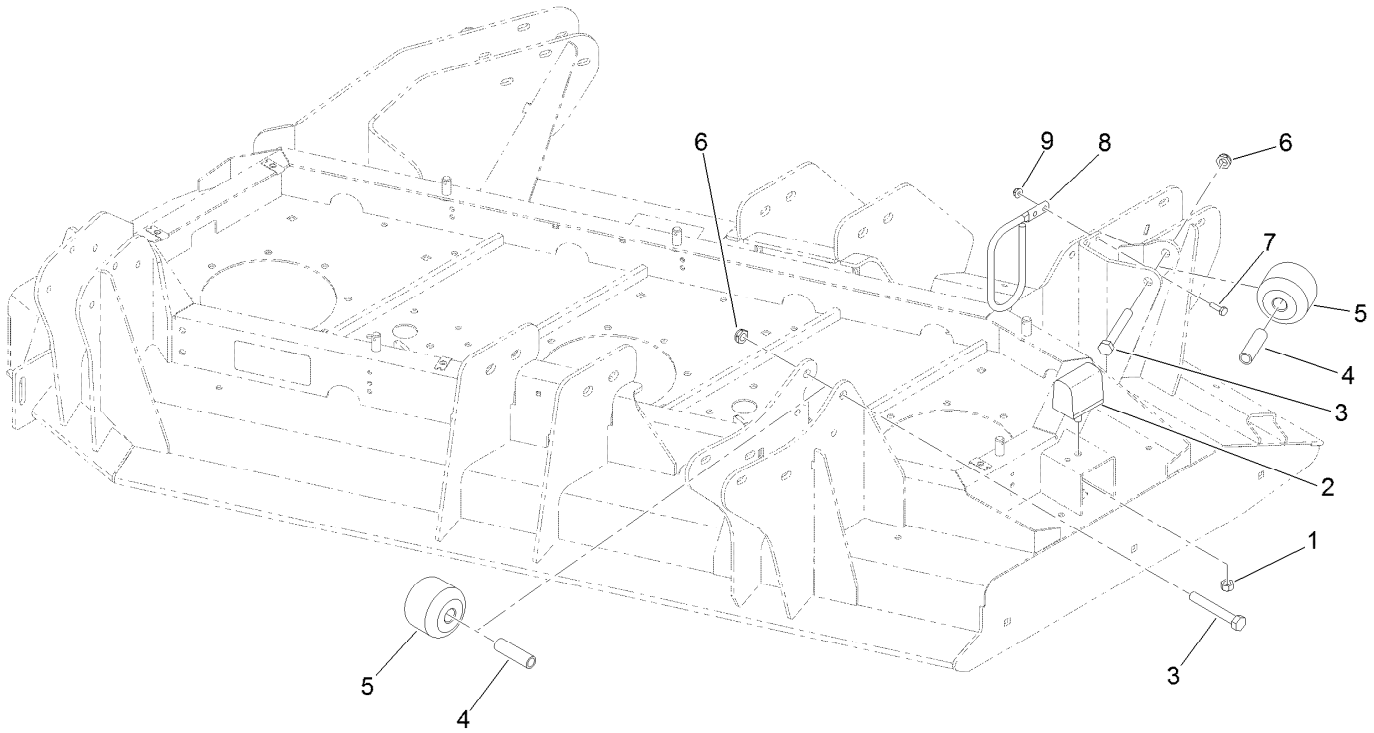

Right Hand Deck Stop Assembly

Ref.	*Part Number*	*Qty.*	*Description*
1	33025-00	1	Nut-Lock, NI
2	87-3470	1	Bumper
3	325-14	2	Screw-HH
4	115-2144	2	Tube-Spacer
5	115-3366	2	Roller
6	3296-45	2	Nut-Hex
7	321-5	2	Screw-HH
8	130-9161	1	Support-Hose
9	104-7201	2	Nut-HF, NI

Right Hand Deck Impact Arm and Limit Switch Assembly

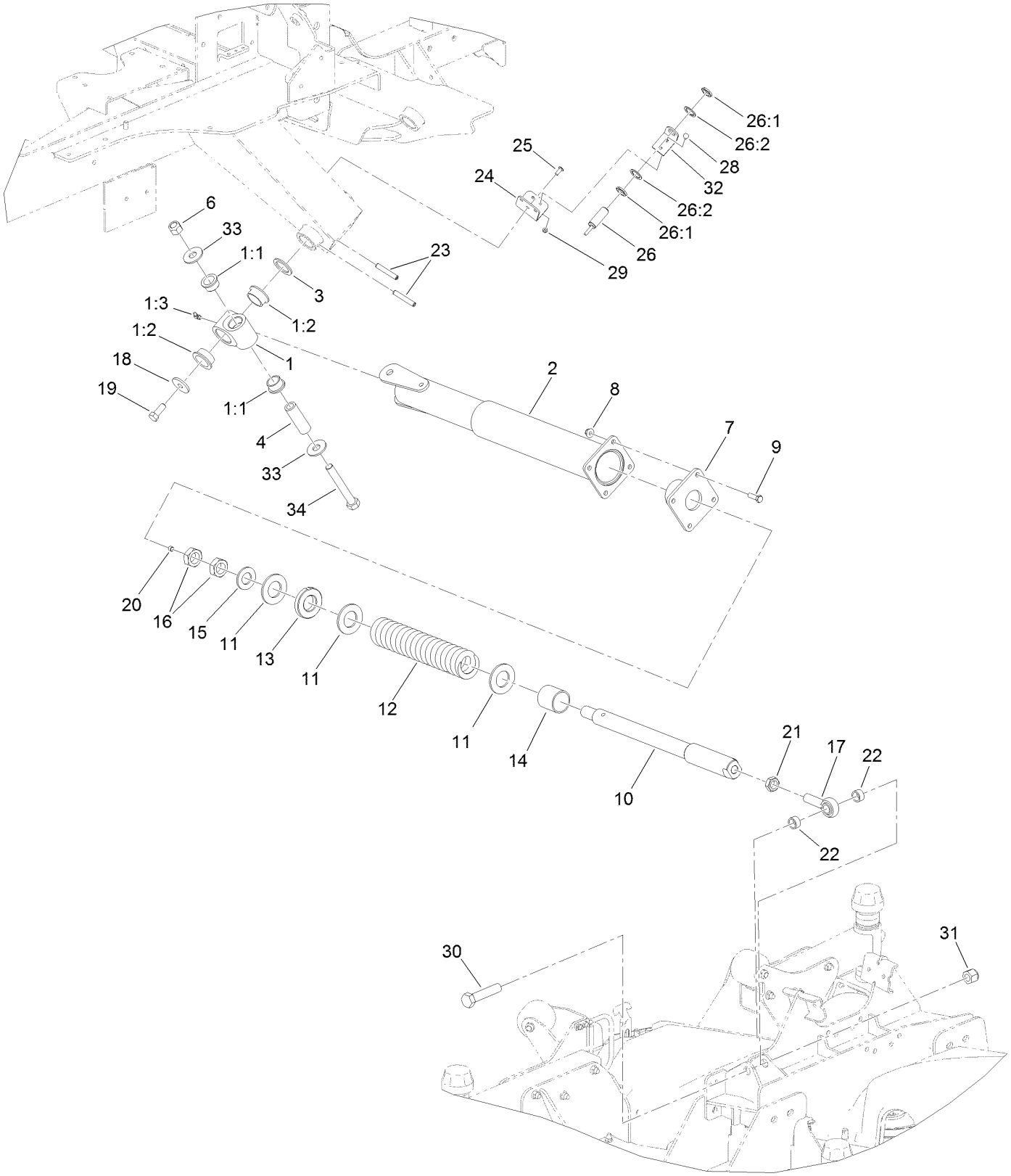

Right Hand Deck Impact Arm and Limit Switch Assembly (continued)

Ref.	Part Number	Qty.	Description
1	115-5468	1	Pivot Hub ASM
1:1	115-5469	2	Bushing-Flange
1:2	114-5680	2	Bushing-Flange
1:3	302-60	1	Fitting-Grease
2	112-7330-03	1	Arm-Impact, Rear
3	98-1452	1	Washer-Thrust
4	94-6604	1	Tube-Spacer
6	3296-53	1	Nut-Lock, NI
7	114-5677-03	1	Housing
8	104-8301	4	Nut-HF, NI
9	323-7	4	Screw-HH
10	117-9404	1	Shaft-Spring
11	114-5986	3	Washer-Plain
12	114-5993	1	Spring-Compression
13	114-5992	1	Bearing-Plastic
14	114-5989	1	Bushing-Plain
15	3256-62	1	Washer-Flat
16	3220-9	2	Nut-Jam
17	105-2806	1	End-Rod
18	106-2008	1	Washer-Thrust
19	325-5	1	Screw-HH
20	285-17	1	Plug-Pipe
21	3220-7	1	Nut-Jam
22	74-3730	2	Spacer-Spindle, Rear
23	117-5479	2	Pin-Spring
24	133-2236	1	Bracket-Support
25	3290-412	3	Rivet-Blind
26	115-5300	1	Proximity Switch ASM
26:1	117-3207	2	Nut-Hex
26:2	117-3208	2	Washer-Lock, Internal Tooth
28	3229-34	2	Screw-CARR
29	3296-2	2	Nut-Lock, NI
30	328-5	1	Screw-HH
31	3296-51	1	Nut-Lock, NI
32	133-2235	1	Bracket-Sensor, Side
33	3256-7	2	Washer-Flat
34	327-23	1	Screw-HH

Right Hand Deck Transport Lock Assembly

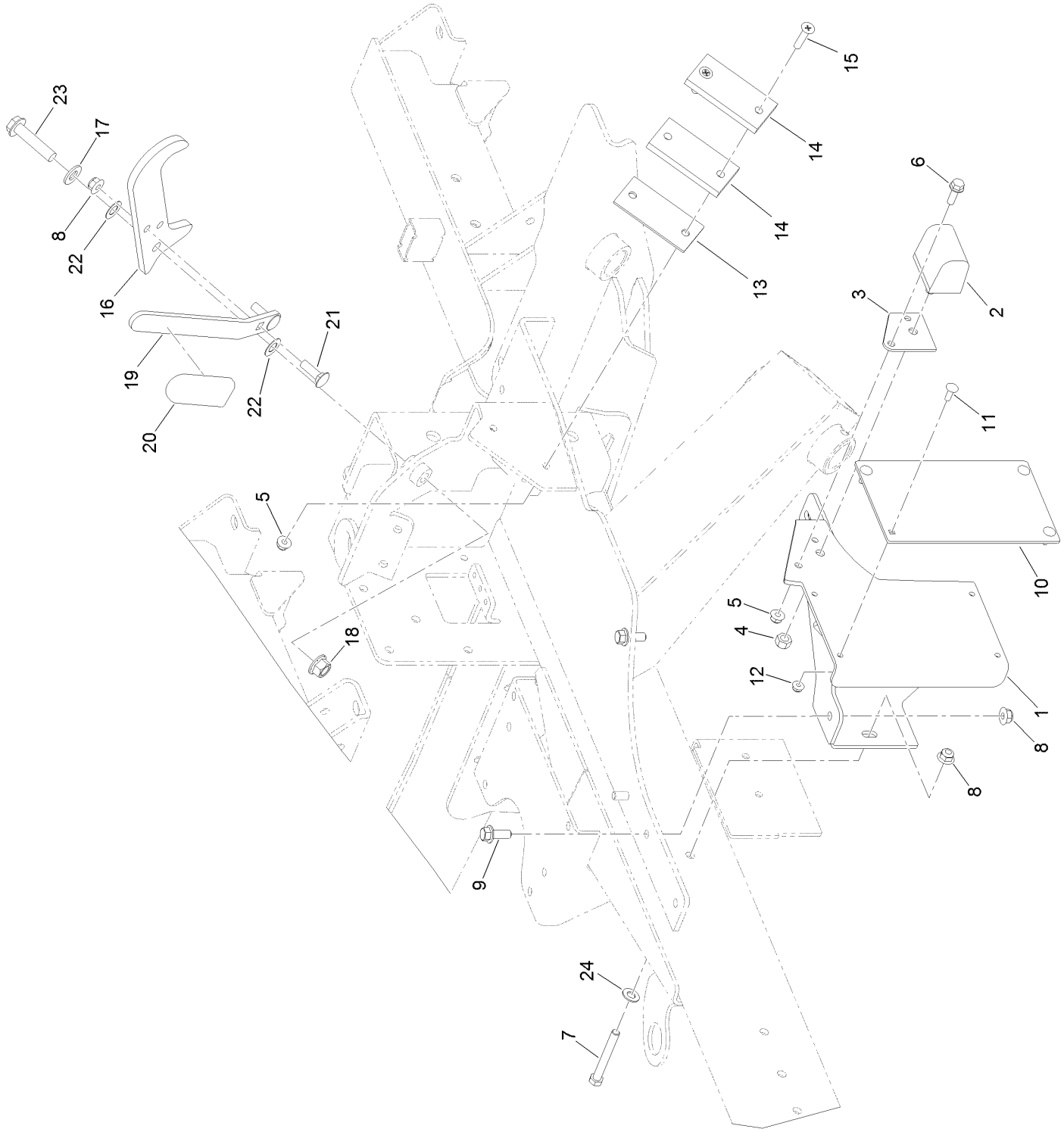

Right Hand Deck Transport Lock Assembly (continued)

Ref.	Part Number	Qty.	Description
1	119-8270-01	1	Pad-Transport, RH
2	87-3470	1	Bumper
3	115-8826	1	Shim-Bumper
4	33025-00	1	Nut-Lock, NI
5	104-8300	3	Nut-HF, NI
6	3234-17	1	Screw-HHF
7	323-14	1	Screw-HH
8	104-8301	5	Nut-HF, NI
9	3234-42	2	Screw-HHF
10	117-5476	1	Pad-Roller
11	1-807512	4	Bolt-CARR
12	104-7201	4	Nut-HF, NI
13	114-5675	1	Shim-Pad
14	69-9300	2	Pad-Bumper
15	32108-107	2	Screw-FH
16	119-7723-03	1	Latch-Wing
17	3256-26	1	Washer-Flat
18	99-5107	1	Nut-Lock
19	114-5659-03	1	Handle-Latch
20	119-1846	1	Grip
21	3231-25	2	Bolt-CARR
22	104-3577	2	Washer
23	3234-46	1	Screw-HHF
24	52-2861	1	Washer

Platform Assembly

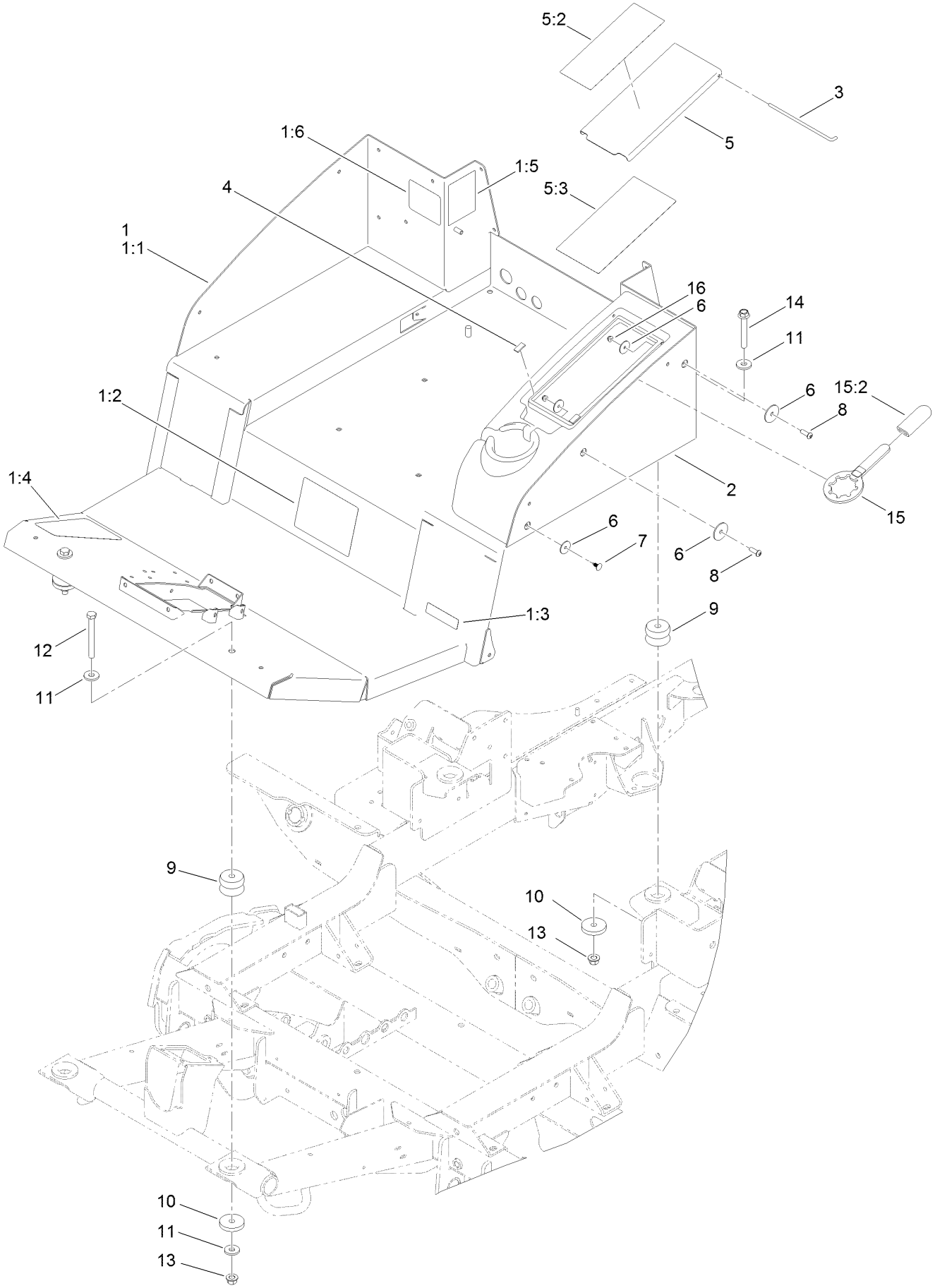

Platform Assembly (continued)

Ref.	Part Number	Qty.	Description
1	130-9100	1	Platform ASM
1:1	130-9101-01	1	Platform
1:2	132-1321	1	Decal-Instructions, Operating
1:3	133-5618	1	Decal-Arrester, Spark
1:4	114-0849	1	Decal-Pedal, Traction
1:5	136-0006	1	Decal-Fuse
1:6	132-1406	1	Decal-Release, Parking Brake
2	112-7316	1	Cover-Storage, Center
3	114-5508	1	Rod-Hinge
4	115-5417	2	Strip-Foam
5	132-1419	1	Lid-Center, Storage
5:2	117-2754	1	Decal-Warning
5:3	136-0083	1	Decal-Service
6	3256-55	10	Washer-Flat
7	117-2382	6	Plug-Plastic
8	3274-69	2	Screw-HSBH
9	110-5954	4	Mount-Center, Bonded
10	115-5519	4	Washer-Plain
11	92-2651	6	Washer
12	702093	2	Screw-HH
13	99-5107	4	Nut-Lock
14	126-3900	2	Screw-HHF
15	121-3874	1	Wrench ASM
15:2	119-1846	1	Grip
16	104-7201	2	Nut-HF, NI

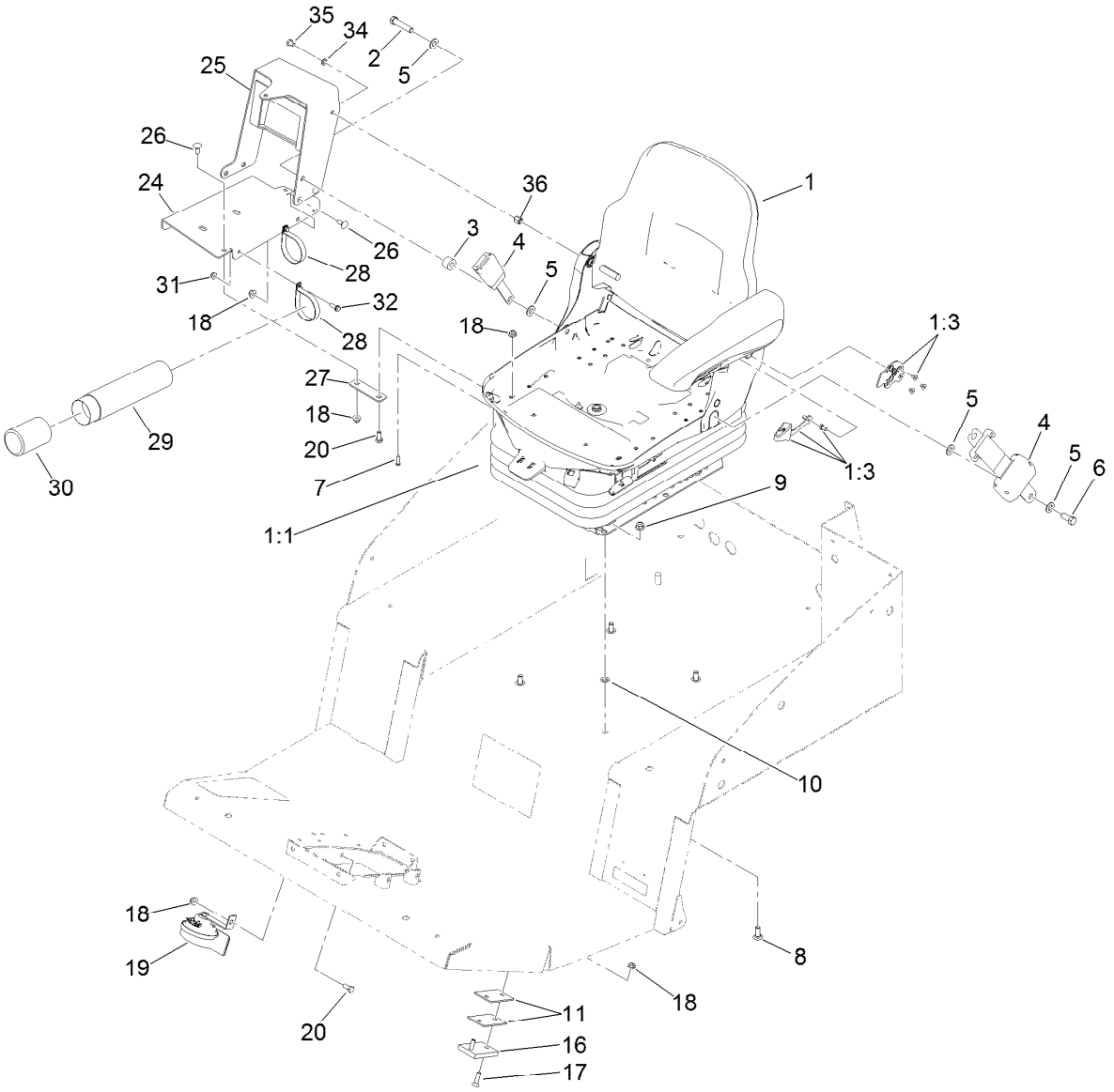

Seat Mount Assembly

Ref.	Part Number	Qty.	Description
1		1	Seat And Suspension ASM ●
1:1	130-2702	1	Air Ride Seat Suspension
1:3	132-1304	1	Backrest Adjustment Kit
2	3212-8	1	Screw-HH
3	17-7190	1	Spacer-Finger
4	110-0413	1	Seatbelt-Retractable
5	3256-25	4	Washer-Flat
6	3212-4	1	Screw-HH
7	119-7742	1	Screw-Cushion
8	3231-22	4	Screw-CARR
9	104-8301	6	Nut-HF, NI
10	107-3154	4	Nut-Push
11	114-5553	4	Shim-Pad
16	69-9290	2	Pad-Bumper
17	32108-103	4	Screw-FH

Ref.	Part Number	Qty.	Description
18	104-8300	11	Nut-HF, NI
19	116749	1	Horn
20	322-3	2	Screw-HH
24	131-2355-03	1	Support-Arm
25	131-2352-03	1	Channel-Support
26	3230-1	5	Bolt-CARR
27	131-2351-03	1	Strap-Support
28	107-1865	2	R-Clamp
29	104-7050	1	Tube-Manual
30	104-7048	1	Cap-Housing
31	104-7201	2	Nut-HF, NI
32	32105-15	2	Screw-HWH
34	3253-4	1	Washer-Lock
35	33114-010	1	Screw-HH
36	112-7405	1	Nut-Hex, Coupling

● Not serviced separately

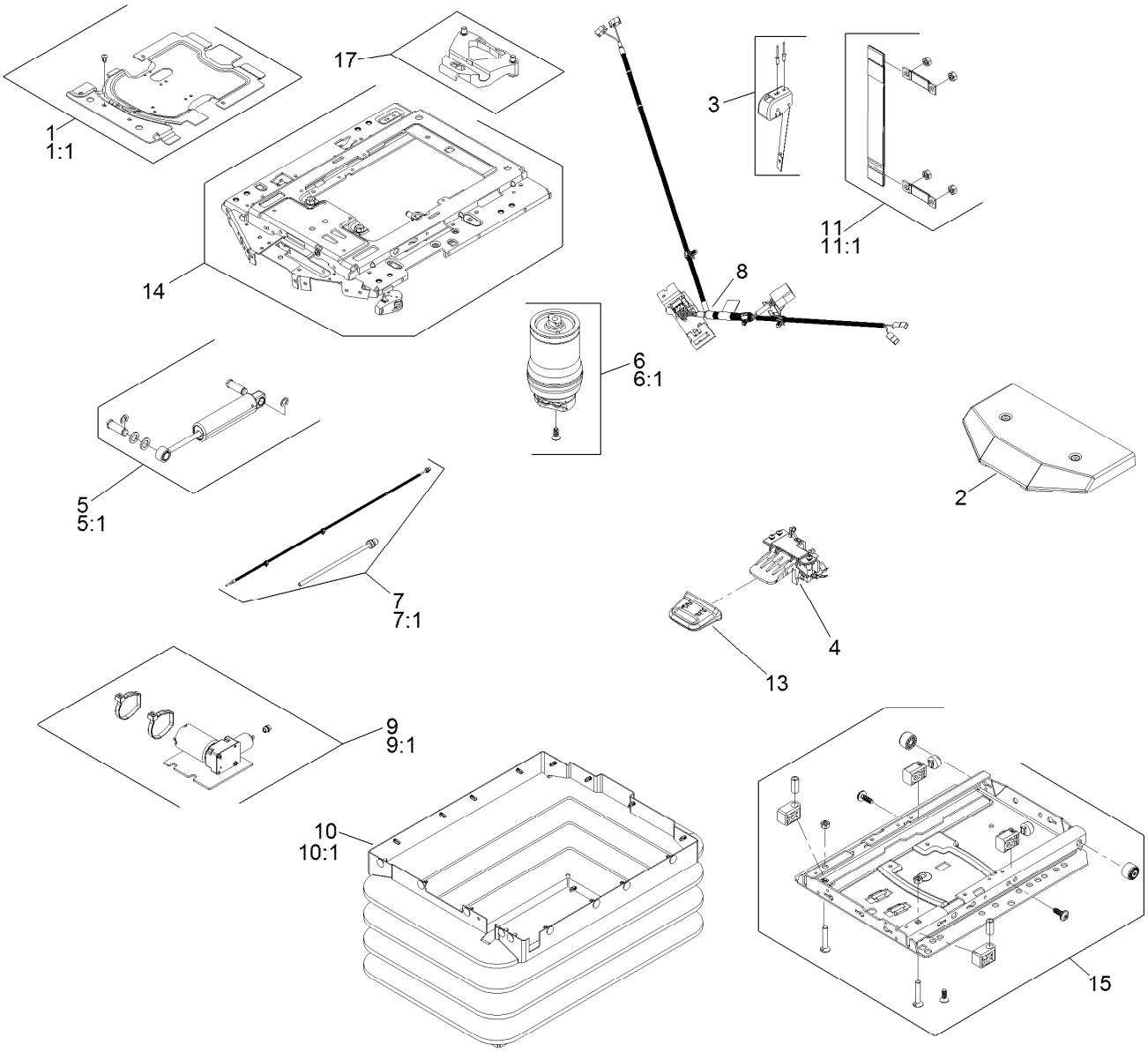

Seat Suspension Assembly No. 130-2702

Ref.	Part Number	Qty.	Description
1	130-2709	1	Cover ASM
1:1	130-2710	1	Cover Kit
2	108-8027	1	Cover
3	130-2711	1	Control-Level
4	108-8029	1	Valve-Control, Air
5	130-2712	1	Shock Absorber ASM
5:1	130-2713	1	Shock Absorber Kit
6	130-2714	1	Air Spring ASM
6:1	130-2715	1	Air Spring Kit
7	130-2716	1	Air Tube ASM
7:1	130-2717	1	Air Tube Kit
8	130-2718	1	Harness-Wire

Ref.	Part Number	Qty.	Description
9	130-2719	1	Compressor
9:1	130-2720	1	Compressor Kit
10	130-2721	1	Bellows ASM
10:1	130-2722	1	Bellows Kit
11	130-2723	1	Tether
11:1	130-2724	1	Tether Kit
12	130-2725	1	Wear Parts Kit ●
13	130-2726	1	Handle
14	130-2727	1	Upper Suspension Kit
15	130-2728	1	Lower Suspension Kit
16	130-2729	1	Adjuster Mounting Kit ●
17	130-2730	1	Limiter-Thrust

● Not illustrated

Control Console Assembly

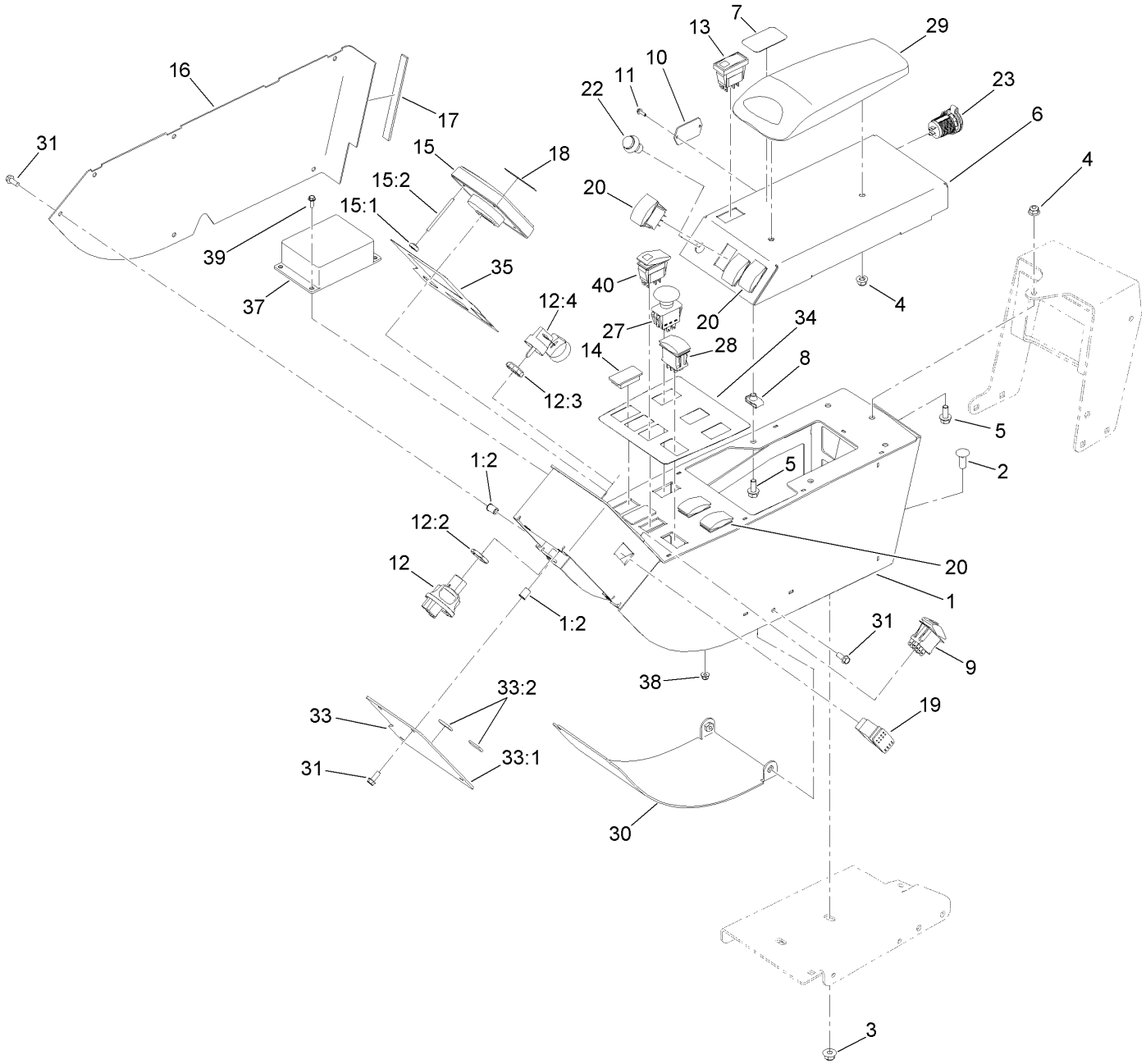

Control Console Assembly (continued)

Ref.	Part Number	Qty.	Description
1	136-0071	1	Console Arm ASM
1:2	32148-6	10	Nut-Clinch
2	3231-22	2	Screw-CARR
3	104-8301	2	Nut-HF, NI
4	104-8300	3	Nut-HF, NI
5	3234-5	5	Screw-HHF
6	136-1072-03	1	Panel-Control Arm
7	136-1003	1	Decal-Console, Cruise
8	94-2413	4	Nut-U
9	111-2254	1	Switch-Rocker, On-None-On
10	121-1630	1	Plate-Cover
11	32144-18	2	Screw-HWH
12	121-5159	1	Switch-Ignition
12:2	121-5160	1	Nut-Hex
12:3	121-5161	1	Nut-Face
12:4	121-5162	1	Set-Key, Ignition
13	104-9007	1	Switch-Rocker
14	99-7420	3	Plug-Hole
15	125-5320	1	Infocenter Kantrak 2700
15:1	115-8884	4	Nut-Thumb
15:2	115-8885	4	Stud
16	136-0069-03	1	Cover-Right

Ref.	Part Number	Qty.	Description
17	131-2222	1	Strip-Foam
18	114-5554	1	Decal-Center, Info
19	95-8999	1	Switch-Rocker, On-None-On
20	100-1535	5	Switch-Rocker, (On)-Off-(On)
22	125-7996	1	Switch-Pb, Momentary
23	131-8388	1	Socket-USB
27	93-9999	1	Switch-PTO
28	107-8034	1	Switch-Rocker, On-Off-On
29	131-9637	1	Armrest-Quick Find
30	131-2340-03	1	Cover-Gate
31	32144-85	12	Screw-HWH Thd Form
33	131-2338	1	Top Front Cover ASM
33:1	131-2339-03	1	Cover-Front, Top
33:2	115-5417	2	Strip-Foam
34	136-1004	1	Decal-Console, Main
35	131-2348	1	Decal-Console, Display
37	105-4515	1	Flasher-Rate, Dual
38	120-4578	4	Nut-HF
39	32105-23	4	Screw
40	119-7769	1	Switch-Rocker, On/None/On

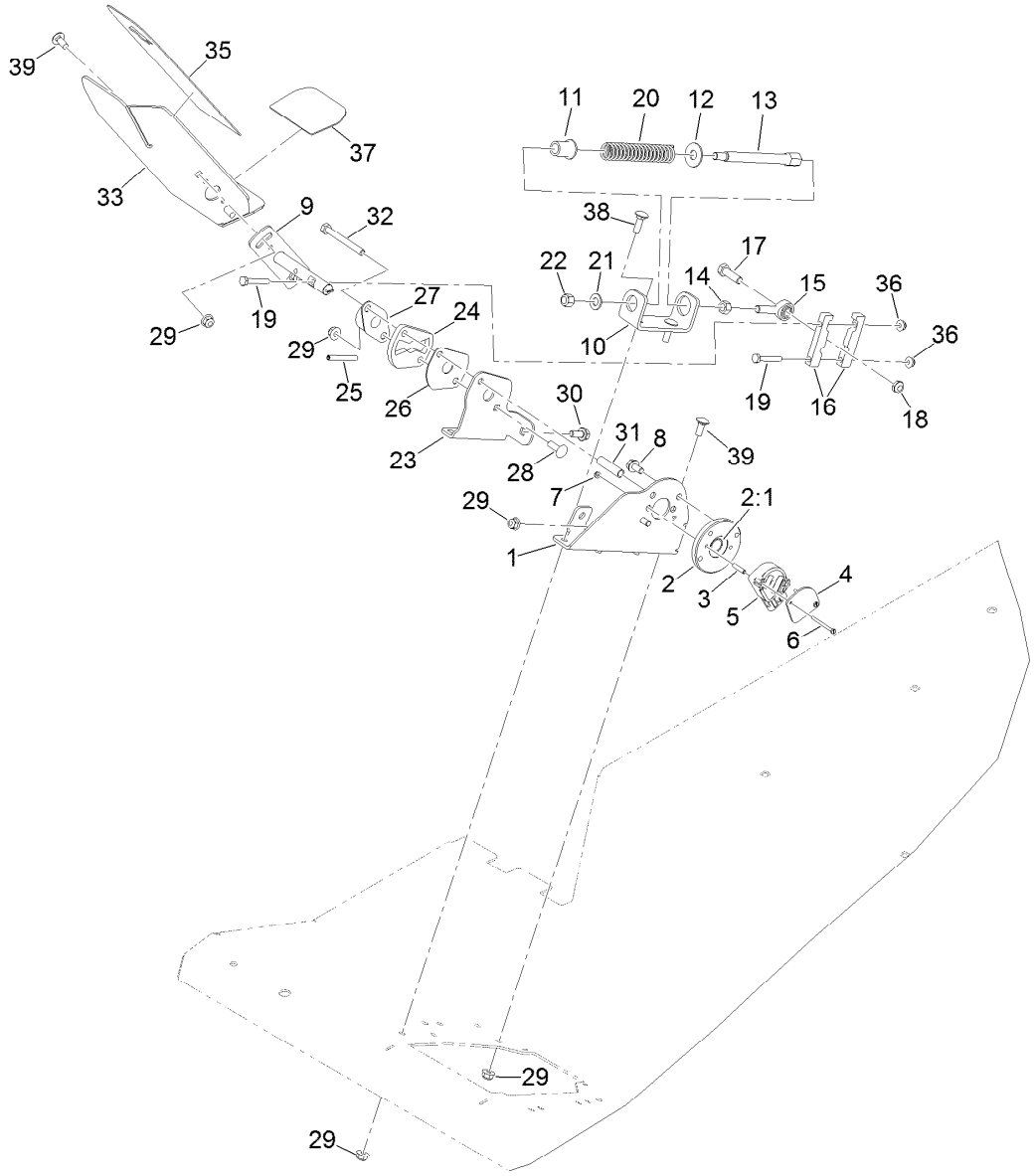

Traction Pedal Assembly

Ref.	Part Number	Qty.	Description
1	131-2249-01	1	Bracket-Sendor
2	117-5445	1	Bushing Hub ASM
2:1	95-7497	1	Bushing-Wheel
3	114-5608	2	Spacer-Standoff
4	114-5595	1	Plate-Capture
5	114-5609	1	Sensor-Position
6	32105-25	2	Screw-SHH
7	3296-9	2	Nut-Hex
8	114-7728	2	Screw-HHF, Patch
9	131-2245	1	Shaft-Pedal, Traction
10	131-2252-01	1	Bracket-Spring
11	92-7610	1	Retainer-Spring
12	3256-5	1	Washer-Flat
13	117-5446	1	Shaft-Spring
14	3219-3	1	Nut-Hex
15	2411-36	1	Bearing-End, Rod
16	117-5459	2	Block-Clamp
17	323-7	1	Screw-HH
18	3296-59	1	Nut-Lock, NI
19	321-37	2	Screw-HH

Ref.	Part Number	Qty.	Description
20	84-9100	1	Spring
21	3256-24	1	Washer-Plain
22	3296-6	1	Nut-Lock
23	131-2250-01	1	Bracket-Butterfly
24	117-5454	1	Plate-Butterfly
25	32121-78	1	Pin-Roll
26	117-5455	1	Plate-Cover
27	256-236	1	Bearing-Mount, Flange
28	3230-22	1	Screw-CARR
29	104-8300	7	Nut-HF, NI
30	3234-47	1	Screw-HHF
31	93-7960	1	Spacer
32	322-14	1	Screw-HH
33	136-4368-01	1	Pedal-Traction
35	93-5347	1	Abrasive-Pedal
36	104-7201	2	Nut-HF, NI
37	93-5368	1	Abrasive-Pedal
38	3230-2	2	Bolt-CARR
39	3230-23	5	Bolt-CARR

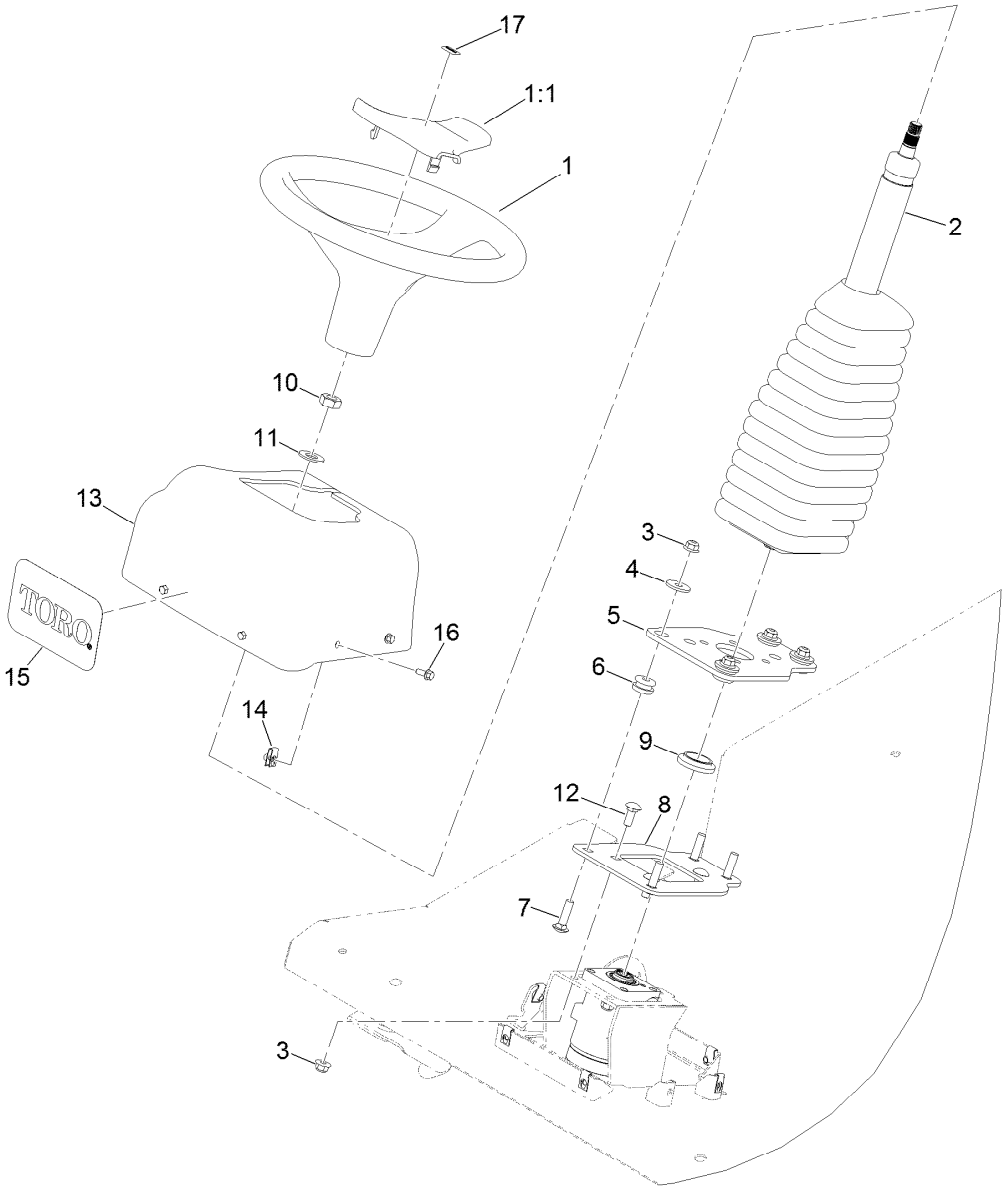

Steering Column Assembly

Ref.	Part Number	Qty.	Description
1	98-1471	1	Wheel-Steering
1:1	98-1468	1	Cover-Wheel, Steering
2	132-1307	1	Column-Steering
3	104-8301	7	Nut-HF, NI
4	63-8410	4	Washer
5	131-2248-01	1	Plate-Steering Mount
6	63-9750	4	Mount
7	3231-26	4	Screw-CARR
8	131-2246-01	1	Plate-Mounting, Valve

Ref.	Part Number	Qty.	Description
9	117-3373	1	Bushing-Alignment
10	3296-33	1	Nut-Lock, NI
11	3256-27	1	Washer-Flat
12	3231-2	3	Bolt-CARR
13	131-2269	1	Cover-Steering
14	107069	7	Clip
15	105-1217	1	Decal
16	3234-33	7	Screw-HHF
17	98-1459	1	Decal

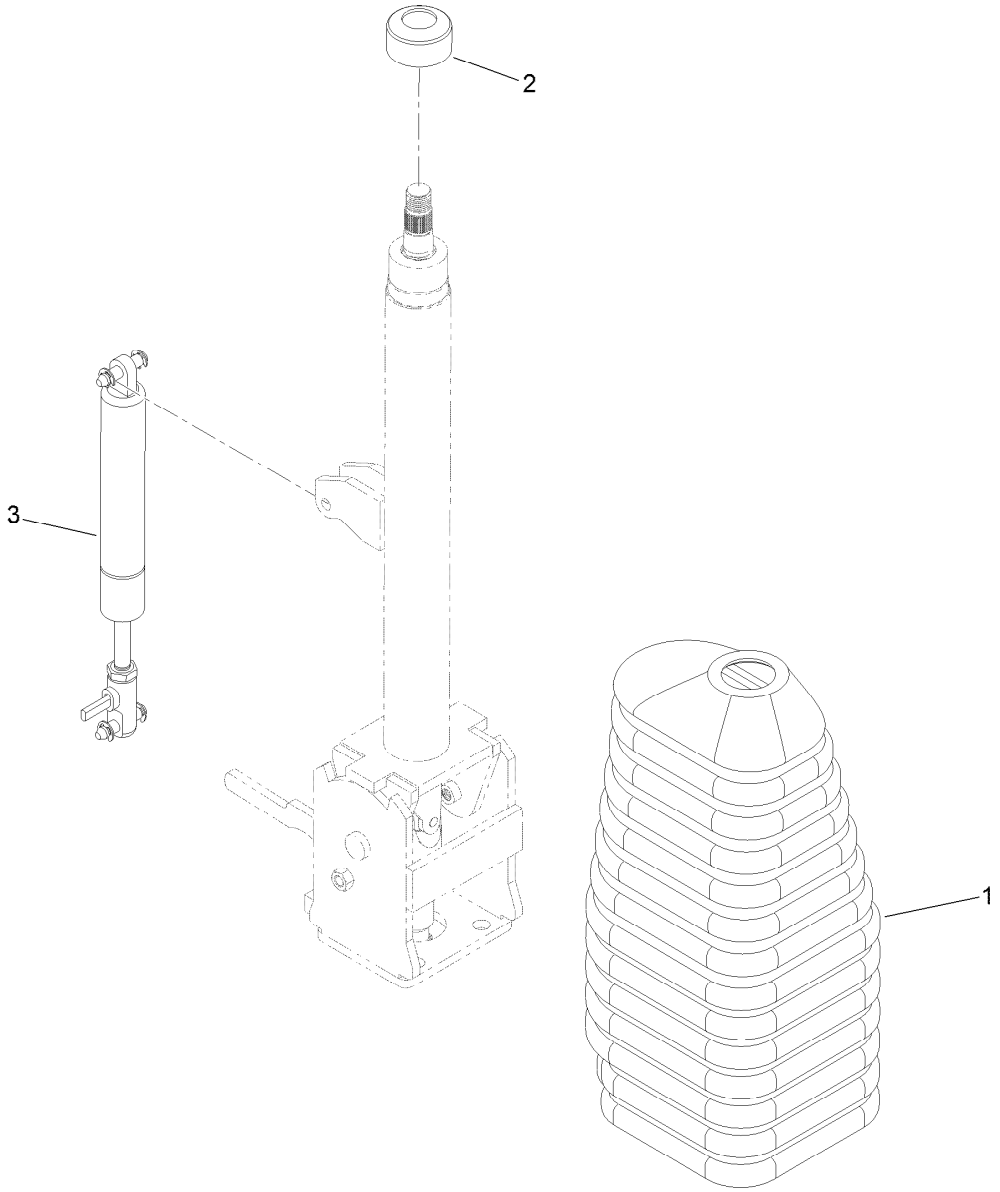

Steering Column Assembly No. 132-1307

Ref.	*Part Number*	*Qty.*	*Description*
1	120-2592	1	Boot-Rubber, Column
2	120-2593	1	Boot-Rubber, Bearing
3	120-2594	1	Gas Spring ASM

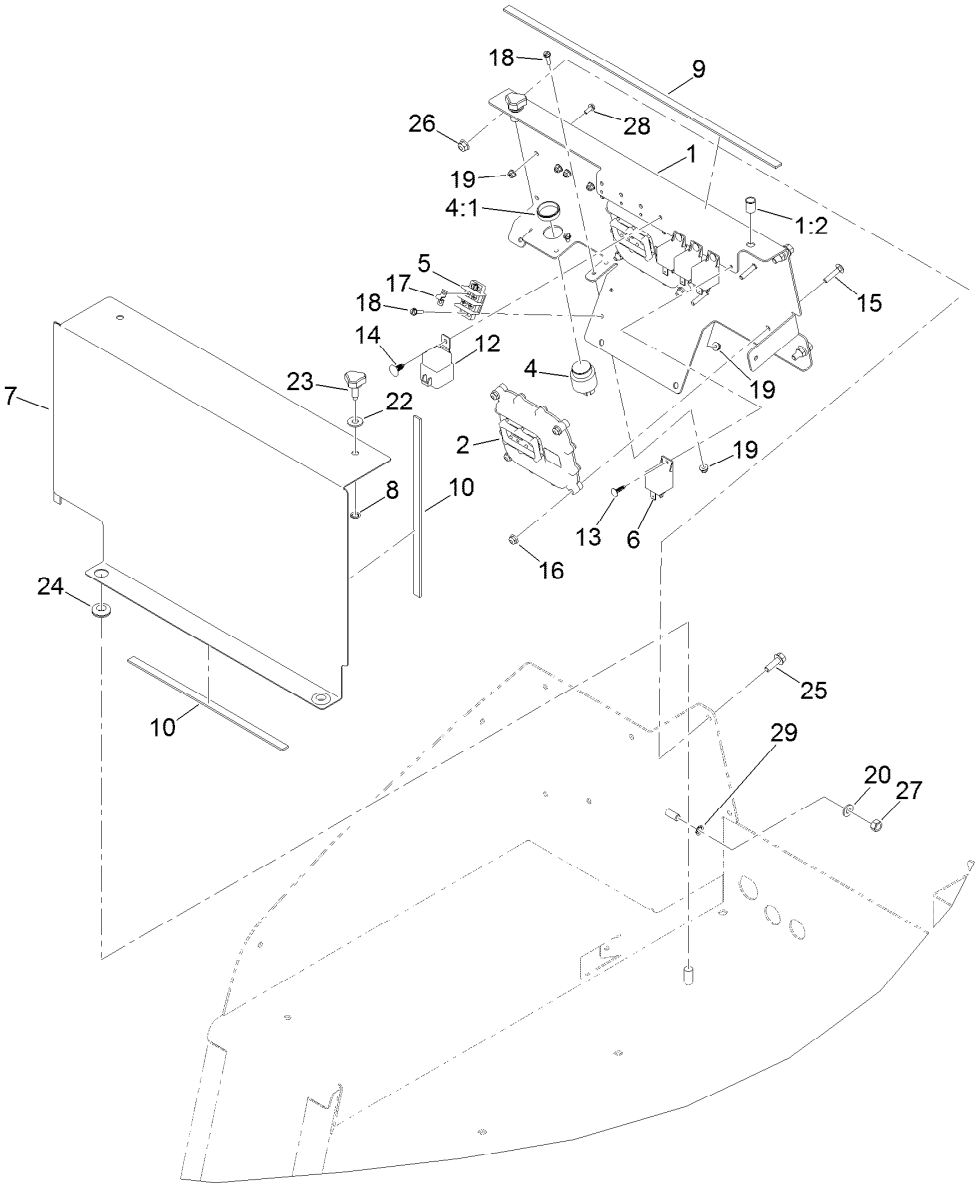

Front Electrical Component Assembly

Ref.	Part Number	Qty.	Description
1	132-1332	1	Electrical Plate ASM
1:2	32148-9	2	Nut-Clinch
2	114-3321	2	Controller-Tec
4	80-9330	1	Audio Alarm ASM
4:1	104-5107	1	Nut-Plastic, Knurled
5	42862	1	Block-Terminal, Ground
6	99-7435	4	Relay
7	130-9034-01	1	Plate-Cover, Electrical
8	32151-72	2	Ring-Retaining
9	131-2221	1	Strip-Foam
10	130-9174	3	Foam-Cooler, Short
12	99-7430	1	Relay-Mini
13	125-8067	4	Plug-Plastic
14	104-0395	1	Plug-Plastic

Ref.	Part Number	Qty.	Description
15	3229-3	8	Screw-CARR
16	104-7201	8	Nut-HF, NI
17	42863	1	Strip-Jumper
18	32105-13	6	Screw-HWH
19	120-4578	10	Nut-HF
20	3256-38	1	Washer-Flat
22	3256-3	2	Washer-Flat
23	95-9648	2	Knob
24	99-3481	2	Grommet
25	3234-29	4	Screw-HHF
26	104-8300	4	Nut-HF, NI
27	32146-2	1	Nut-Hex
28	3290-321	4	Screw-HWH
29	3254-6	1	Washer-Lock, Internal

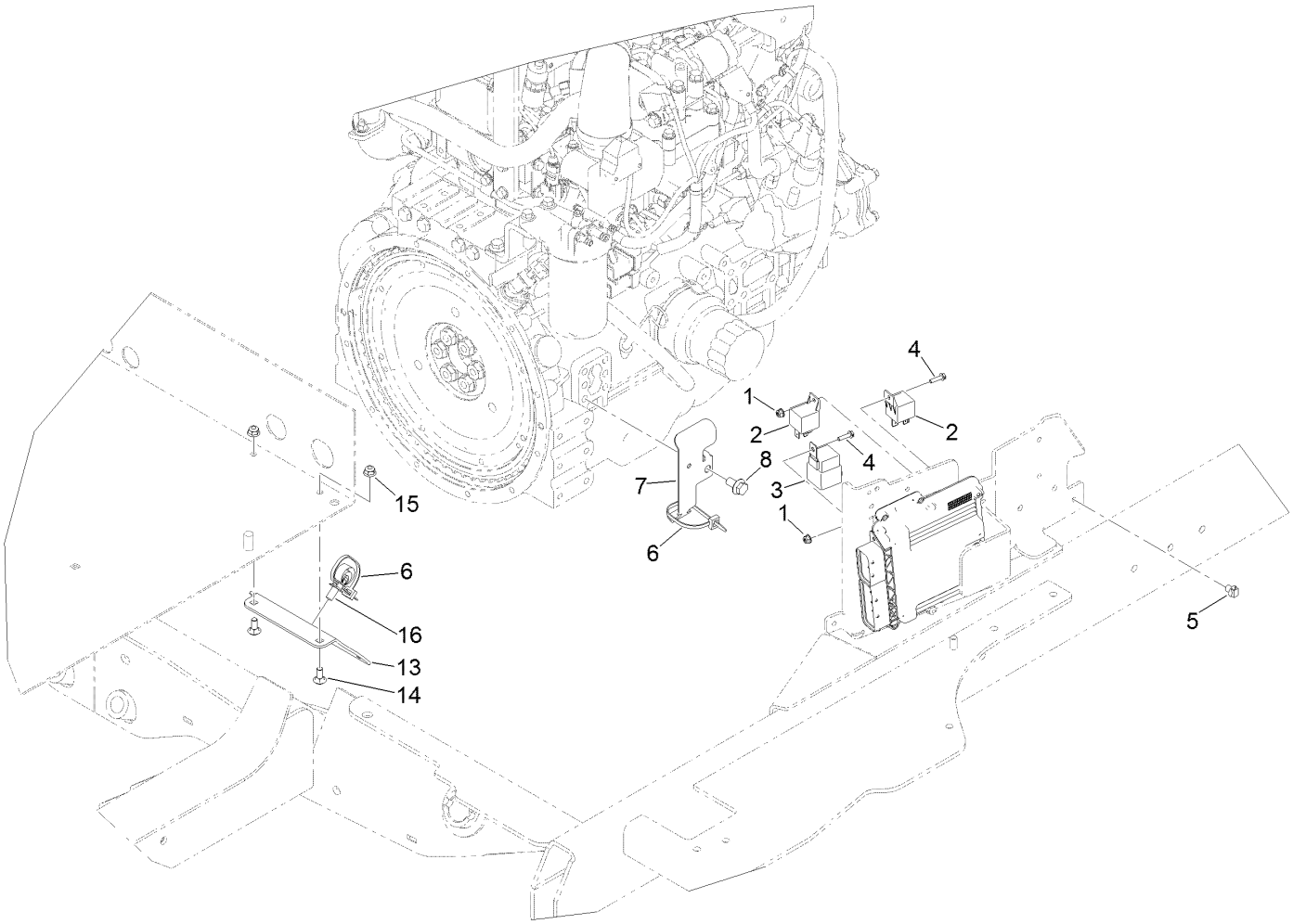

Mid Electrical Component Assembly

Ref.	*Part Number*	*Qty.*	*Description*
1	120-4578	2	Nut-HF
2	99-7435	2	Relay
3	99-7430	1	Relay-Mini
4	32105-13	2	Screw-HWH
5	32180-030	1	Clip-Tie
6	3290-378	2	Tie-Cable
7	132-9627	1	Bracket-Harness
8	33105-020	1	Screw-HHF
13	136-0074-01	1	Bracket-Bulkhead, Electrical
14	3230-1	2	Bolt-CARR
15	104-8300	2	Nut-HF, NI
16	32180-031	1	Clip-Tree (W/Tie)

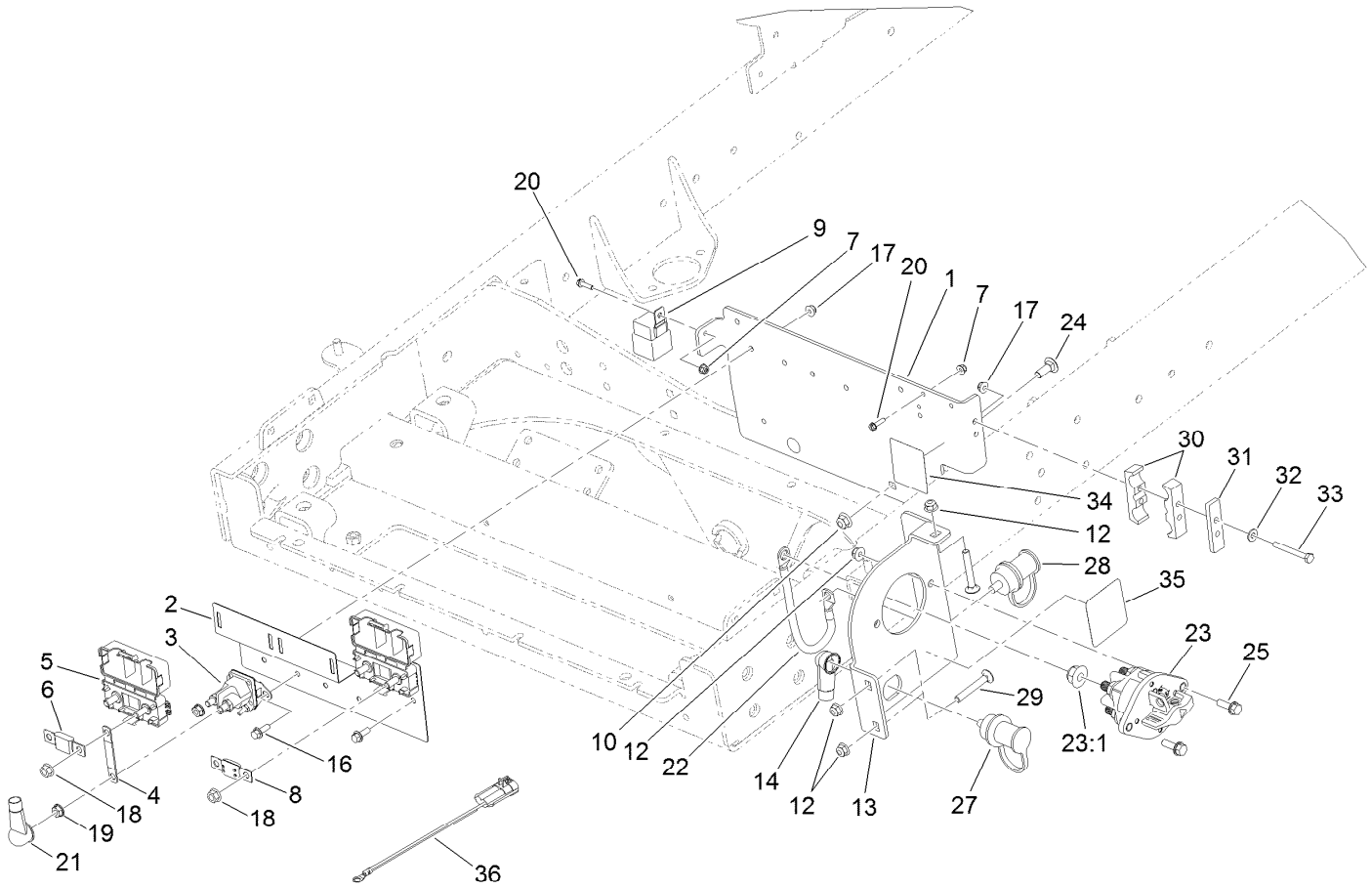

Rear Electrical Component Assembly

Ref.	Part Number	Qty.	Description
1	122-0518-03	1	Bracket-Electrical
2	122-0624-03	1	Bracket-Fuse
3	131-8342	1	Solenoid
4	114-5682	1	Strap-Jumper
5	114-3318	2	Holder-Fuse, Mega
6	AU126232	1	Fuse-100A
7	120-4578	3	Nut-HF
8	122-0628	1	Fuse-Mega
9	99-7430	1	Relay-Mini
10	104-8301	2	Nut-HF, NI
12	104-8300	6	Nut-HF, NI
13	132-1362-03	1	Bracket-Disconnect
14	32180-009	1	Insulator-Lug, Red
16	3234-4	4	Screw-HHF
17	104-7201	6	Nut-HF, NI
18	127-2371	4	Nut-HF
19	107-0380	2	Nut-HF

Ref.	Part Number	Qty.	Description
20	32105-13	3	Screw-HWH
21	32180-008	1	Insulator-Lug, Red
22	122-0701	1	Ground Jumper
23	122-0603	1	Switch-Disconnect
23:1	33006-00	1	Nut-HF
24	3231-2	2	Bolt-CARR
25	3234-29	2	Screw-HHF
27	132-1364	1	Stud-Jumper, Positive
28	132-1365	1	Stud-Jumper, Negative
29	3230-7	3	Bolt-CARR
30	99-3641	2	Clamp-Tube
31	114-0989	1	Plate-Cover
32	3256-22	2	Washer-Flat
33	321-18	2	Screw-HH
34	132-1315	1	Decal-Fuse
35	132-1313	1	Decal-Disconnect
36	108-9470	1	Harness-Wire, Fusible Link

Battery Cable Routing Assembly

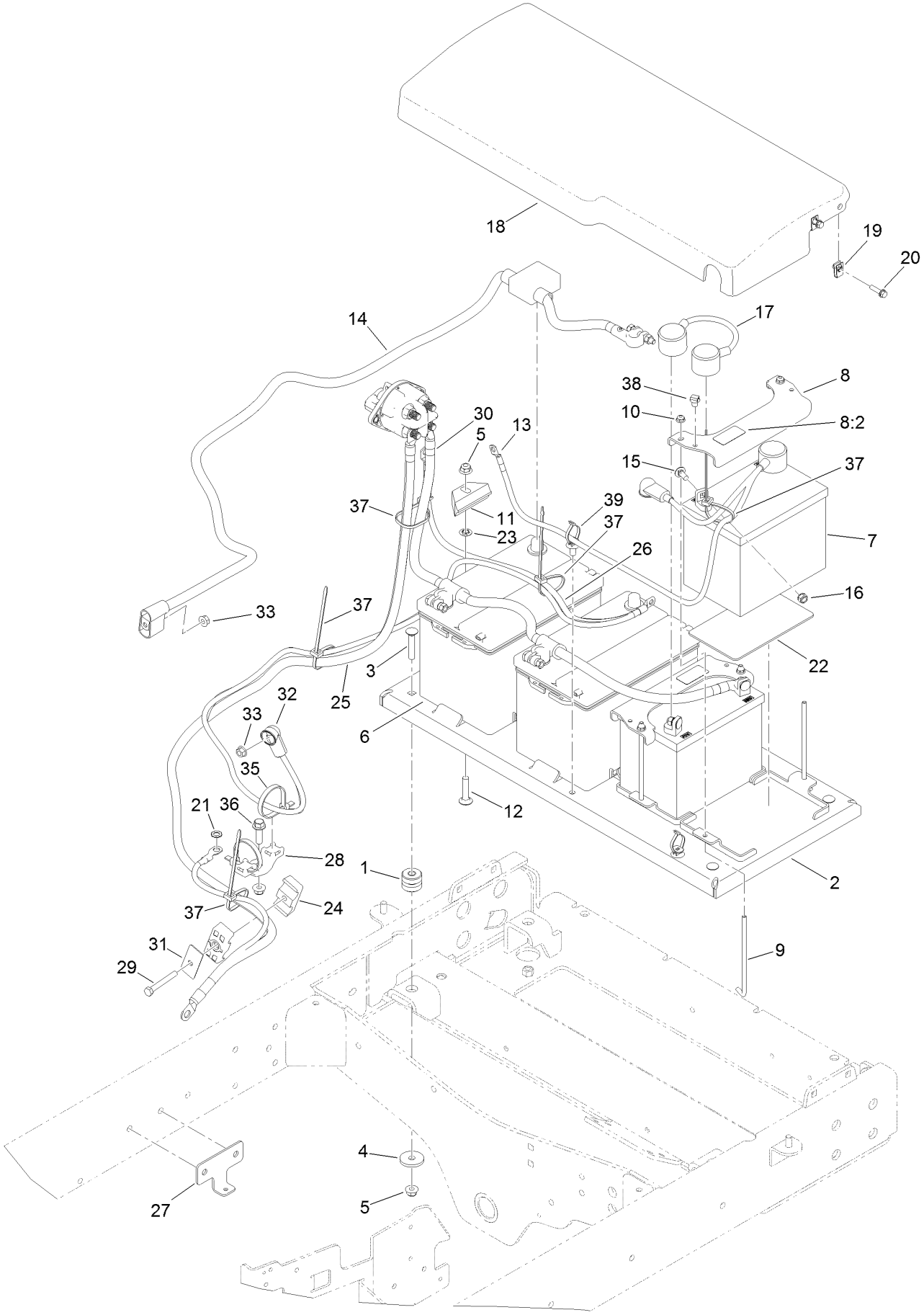

Battery Cable Routing Assembly (continued)

Ref.	Part Number	Qty.	Description
1	130-9077	4	Mount-ISO
2	130-9084-03	1	Tray-Battery
3	3231-6	4	Screw-CARR
4	114-2120	4	Washer
5	104-8301	7	Nut-HF, NI
6		2	Battery-12 Volt, Wet ●■
7		2	Battery (340 CCA, Wet) ●■
8	132-1388	2	Bracket-Battery
8:2	132-1318	1	Decal-24 Volt
9	104-8567	4	Holdown-Battery
10	104-7201	4	Nut-HF, NI
11	66-2490	2	Retainer-Battery
12	3231-5	2	Screw-CARR
13	122-0401	1	Cable-Battery, Positive
14	122-1146	1	Cable-Battery, Positive ASM
15	3230-23	4	Bolt-CARR
16	32149-1	4	Nut-Keps
17	122-0402	1	Cable-Battery, Jumper (24V)
18	130-9032	1	Cover-Battery
19	107069	4	Clip
20	120-4654	4	Screw-HHF
21	3255-9	1	Washer-Lock
22	62-4300	2	Pad-Skid, Anti
23	107-3154	2	Nut-Push
24	94-8105	2	Clamp-Tube
25	122-0404	1	Cable-Battery, Negative
26	122-0329	1	Cable-Battery
27	122-0604-03	1	Bracket-Battery Cable
28	32180-187	1	Clip-Double Tie Mount
29	322-12	1	Screw-HH
30	122-0617	1	Cable-Battery, Negative
31	69-9761	1	Plate-Cover
32	122-0331	1	Cable-Battery
33	33004-00	2	Nut-HF
35	3334-945	2	Tie-Cable
36	119-4061	1	Screw-HHF
37	3290-378	6	Tie-Cable
38	32180-030	1	Clip-Tie
39	32180-031	2	Clip-Tree (W/Tie)

● Obtain locally.

■ Not serviced separately

Wire Harness Assembly

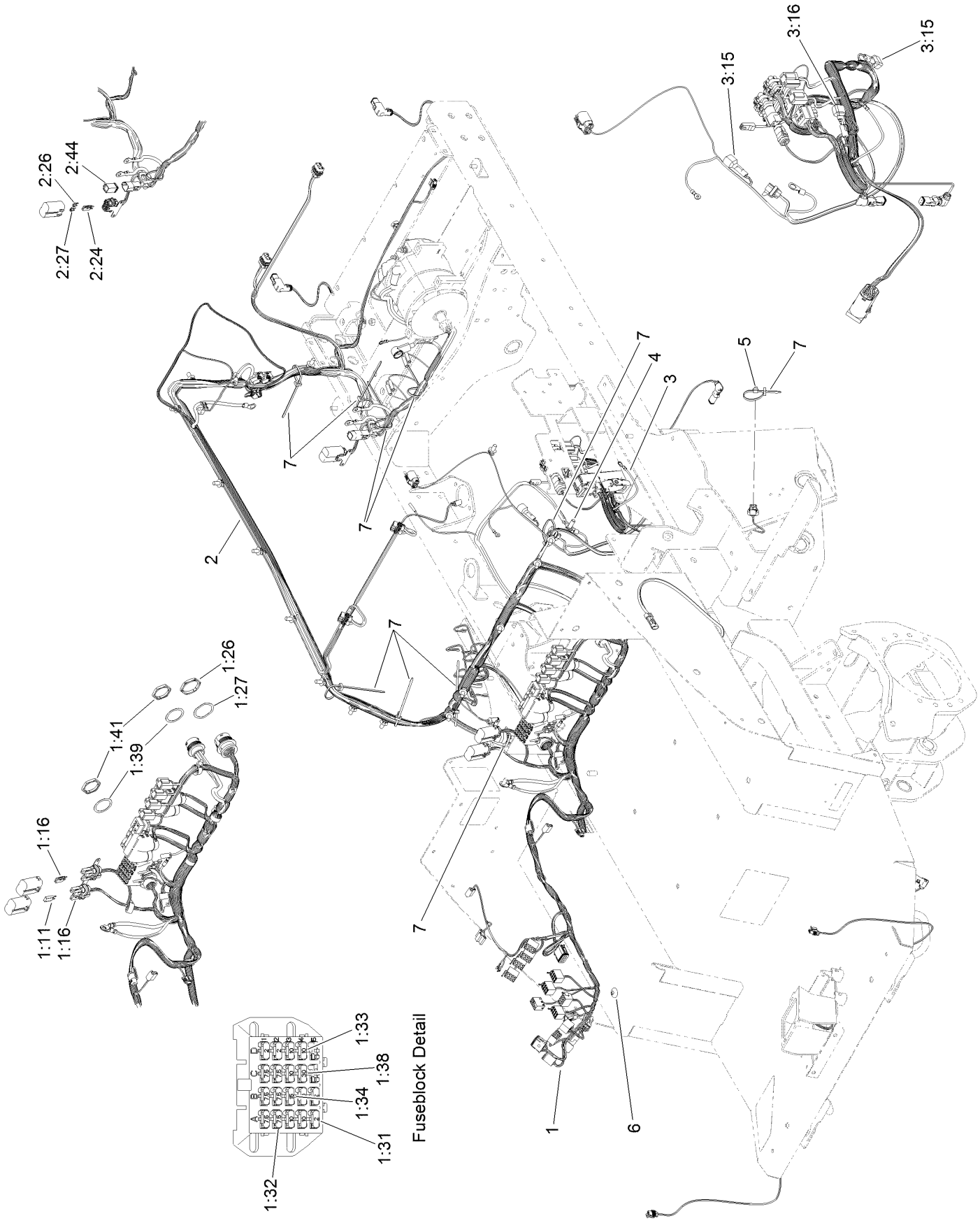

Wire Harness Assembly (continued)

Ref.	Part Number	Qty.	Description
1	122-0990	1	Harness-Wire
1:11	32180-190	1	Resistor-2K Ohm
1:16	32180-167	7	Diode-Mini Fuse, 6A
1:26	32180-135	1	Nut-Connector
1:27	32180-143	1	Washer-Lock
1:31	121-8861	4	Fuse-Mini Blade, 2 Amp
1:32	121-8865	6	Fuse-Mini Blade, 7.5 Amp
1:33	121-8866	6	Fuse-Mini Blade, 10 Amp
1:34	121-8867	1	Fuse-Mini Blade, 15 Amp
1:38	121-8870	1	Fuse-Mini Blade, 30 Amp
1:39	32180-174	2	Washer-Lock
1:41	32180-175	2	Nut-Connector

Ref.	Part Number	Qty.	Description
2	122-0807	1	Harness-Wire
2:24	32180-167	1	Diode-Mini Fuse, 6A
2:26	121-8864	1	Fuse-Mini Blade, 5 Amp
2:27	121-8869	1	Fuse-Mini Blade, 25 Amp
2:44	122-0392	1	Voltage Divider-Sealed
3	122-0993	1	Harness-Wire
3:15	100-4918	2	Diode
3:16	121-8891	1	Resistor (1.6K Ohm)
4	33105-025	1	Screw-HHF
5	32180-030	2	Clip-Tie
6	32180-149	1	Tie-Button Head
7	3290-378	11	Tie-Cable

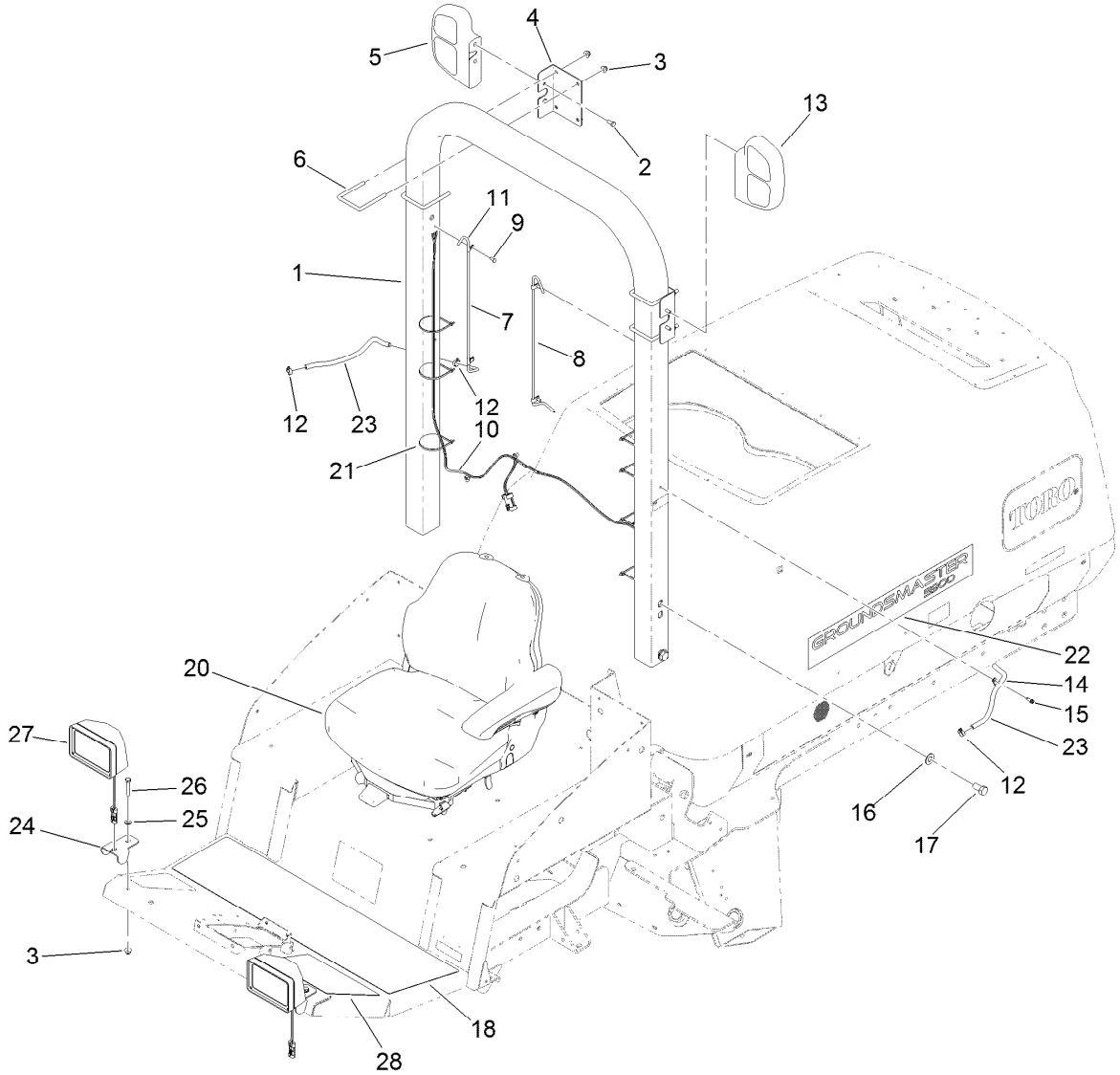

Roll-Over Protection System Assembly For ROPS Model Only

Ref.	Part Number	Qty.	Description
1	132-1416	1	ROPS ASM
2	33114-020	4	Screw-HH
3	104-8301	10	Nut-HF, NI
4	114-5601-03	2	Bracket-Flasher
5	108-8007	1	Tail Light Flasher ASM
6	100-7067	4	U-Bolt (4 Inch)
7	114-0938	1	Tube-Vent
8	114-0937	1	Tube-Vent
9	3290-412	4	Rivet-Blind
10	122-0786	1	Harness-Wire, Flashers
11	2412-72	4	Clip-Closed, Insulated
12	2412-108	4	Clamp-Worm
13	108-8008	1	Tail Light Flasher ASM
14	2412-134	2	Clamp-R
15	49-2040	2	Screw-HWHTF
16	3256-27	4	Washer-Flat
17	327-3	4	Screw-HH
18	132-1333	1	Tread-Foot, Abrasive
20	117-5676	1	Premium Seat ASM
21	3290-379	7	Tie-Cable
22	110-6008	2	Decal-Hood
23	110-4110	2	Hose-Fuel
24	125-5305-01	2	Bracket-Headlight
25	3256-45	2	Washer-Flat
26	323-10	2	Screw-HH
27	114-5928	2	Headlight ASM
28	132-1334	1	Tread-Foot, Abrasive

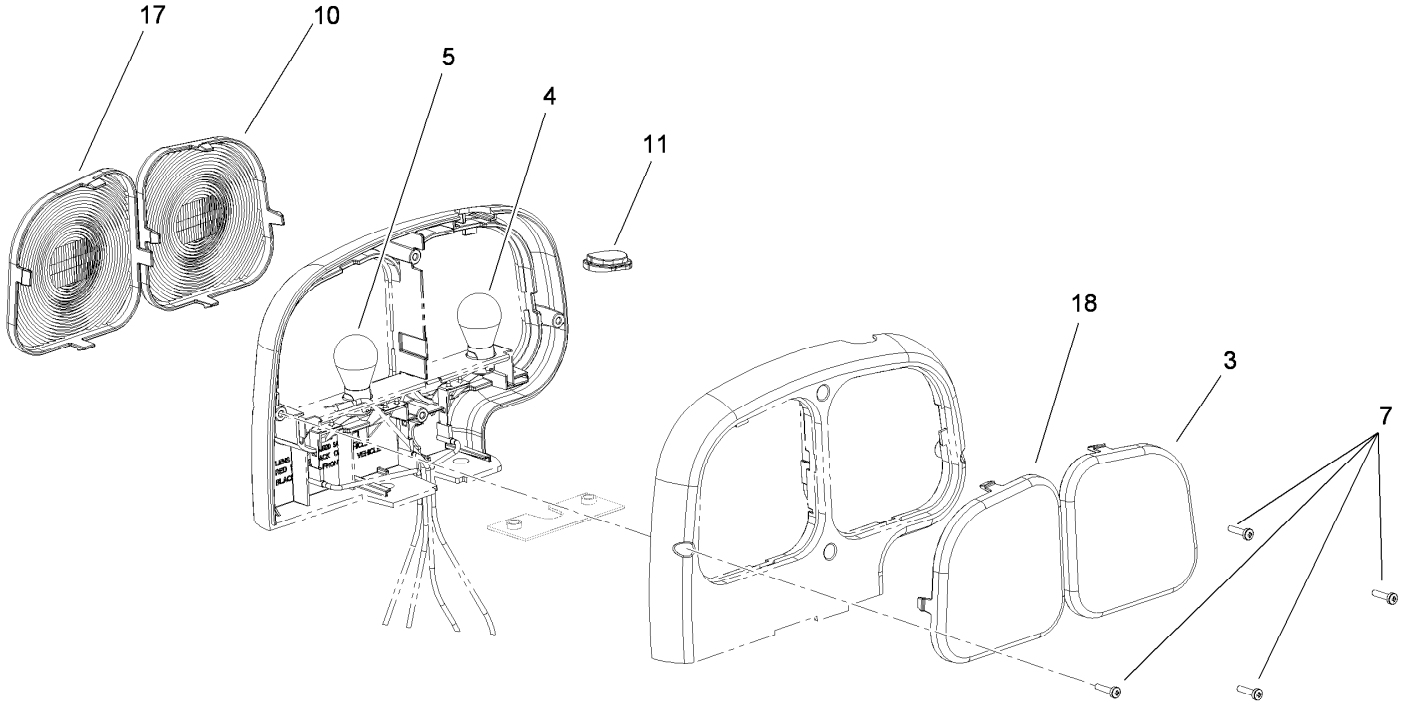

Right Hand Tail Light Assembly No. 108-8007

Ref.	*Part Number*	*Qty.*	*Description*
3	108-8056	1	Lens-Amber, Base
4	7228	1	Bulb-1156
5	108-8054	1	Bulb-1157
7	108-8053	4	Screw
10	108-8057	1	Lens-Amber, Cover
11	108-8055	1	Lens-Amber, Window
17	108-8060	1	Lens-Red, Base
18	108-8059	1	Lens-Black, Cover

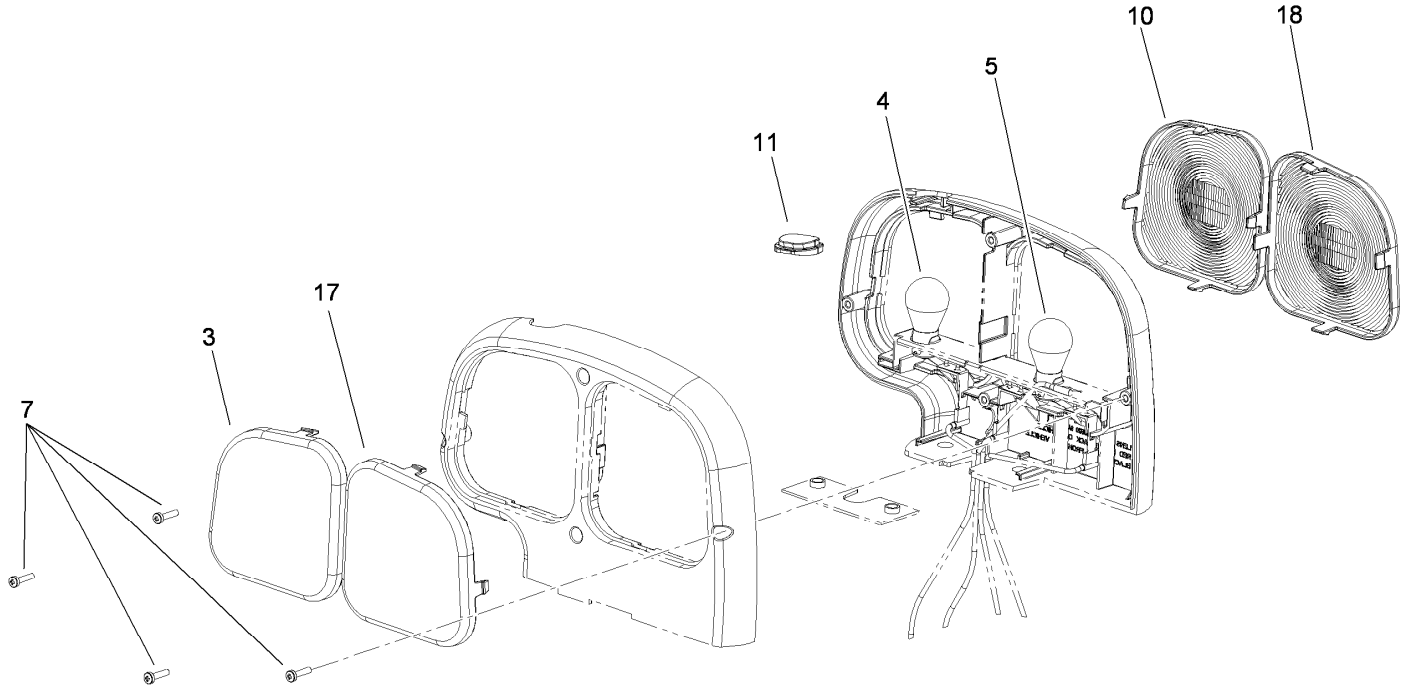

Left Hand Tail Light Assembly No. 108-8008

Ref.	*Part Number*	*Qty.*	*Description*
3	108-8056	1	Lens-Amber, Base
4	7228	1	Bulb-1156
5	108-8054	1	Bulb-1157
7	108-8053	4	Screw
10	108-8057	1	Lens-Amber, Cover
11	108-8055	1	Lens-Amber, Window
17	108-8061	1	Lens-Red, Cover
18	108-8058	1	Lens-Black, Base

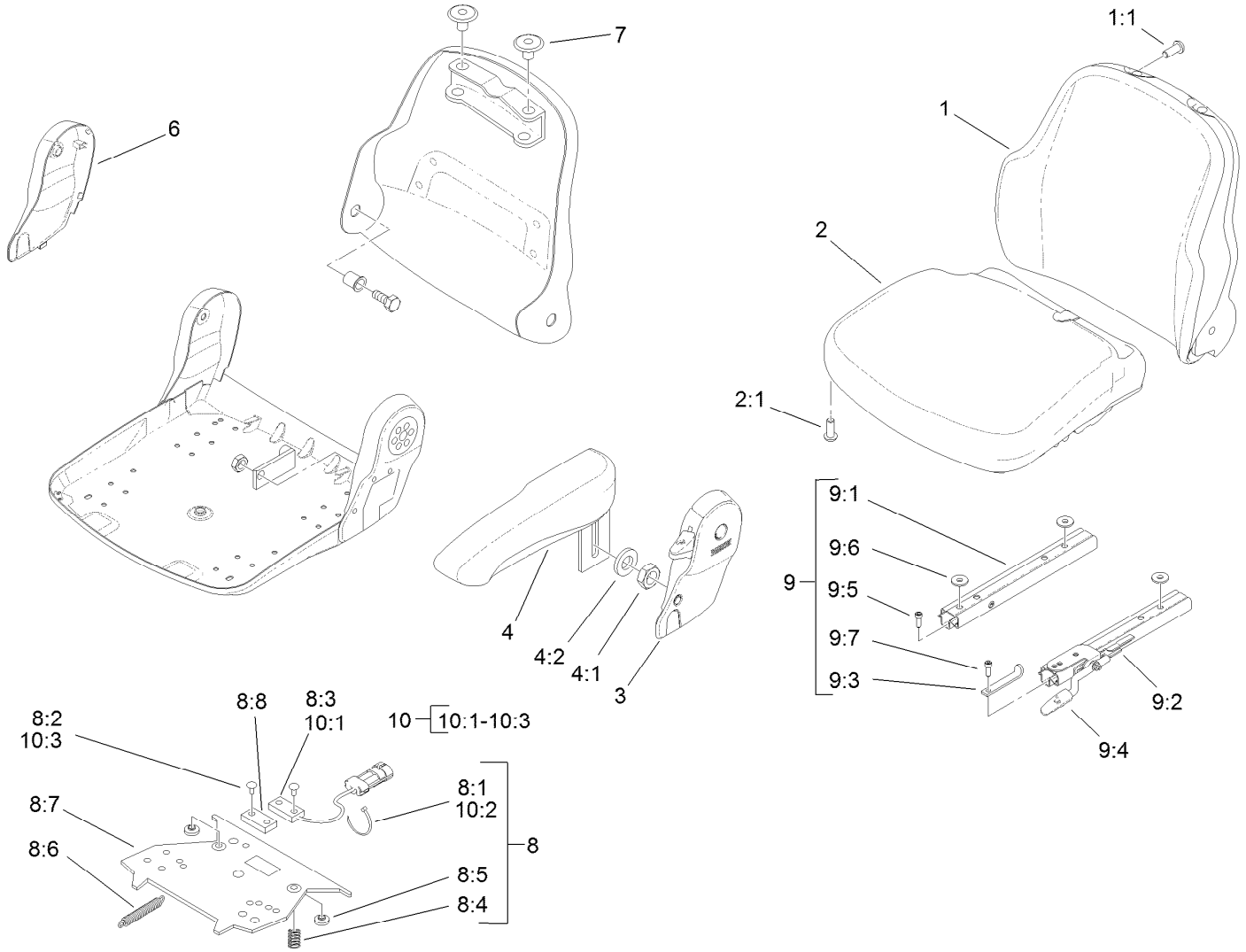

Vinyl Premium Seat Assembly No. 117-5676

Ref.	Part Number	Qty.	Description
1	108-8016	1	Backrest Cushion ASM
1:1	119-7742	4	Screw-Cushion
2	108-8017	1	Seat Cushion ASM
2:1	119-7742	3	Screw-Cushion
3	108-8018	1	Cover-Armrest
4	108-8019	1	LH Armrest ASM
4:1	82-9650	1	Nut
4:2	107-1198	1	Washer
6	108-8021	1	Cover-Armrest
7	108-8022	2	Cover-Black
8	108-8024	1	Switch Kit
8:1		3	Wire Tie ●
8:2		4	Rivet ●
8:3		1	Sensor-Seat Switch ●
8:4		2	Spring-Compression ●
8:5		2	Bumper-Pressure Plate ●

Ref.	Part Number	Qty.	Description
8:6		1	Spring-Extension ●
8:7		1	Plate-Mounting ●
8:8		1	Magnet ●
9	108-8025	1	Adjustment Rail Set
9:1		1	Rail-Adjustment, RH ●
9:2		1	Rail-Adjustment, LH ●
9:3		1	Stop-Rail ●
9:4		1	Handle ●
9:5		3	Screw ●
9:6		3	Washer ●
9:7		1	Screw ●
10	110-6189	1	Switch Kit
10:1		1	Switch ●
10:2		3	Wire Tie ●
10:3		2	Rivet ●

● Not serviced separately

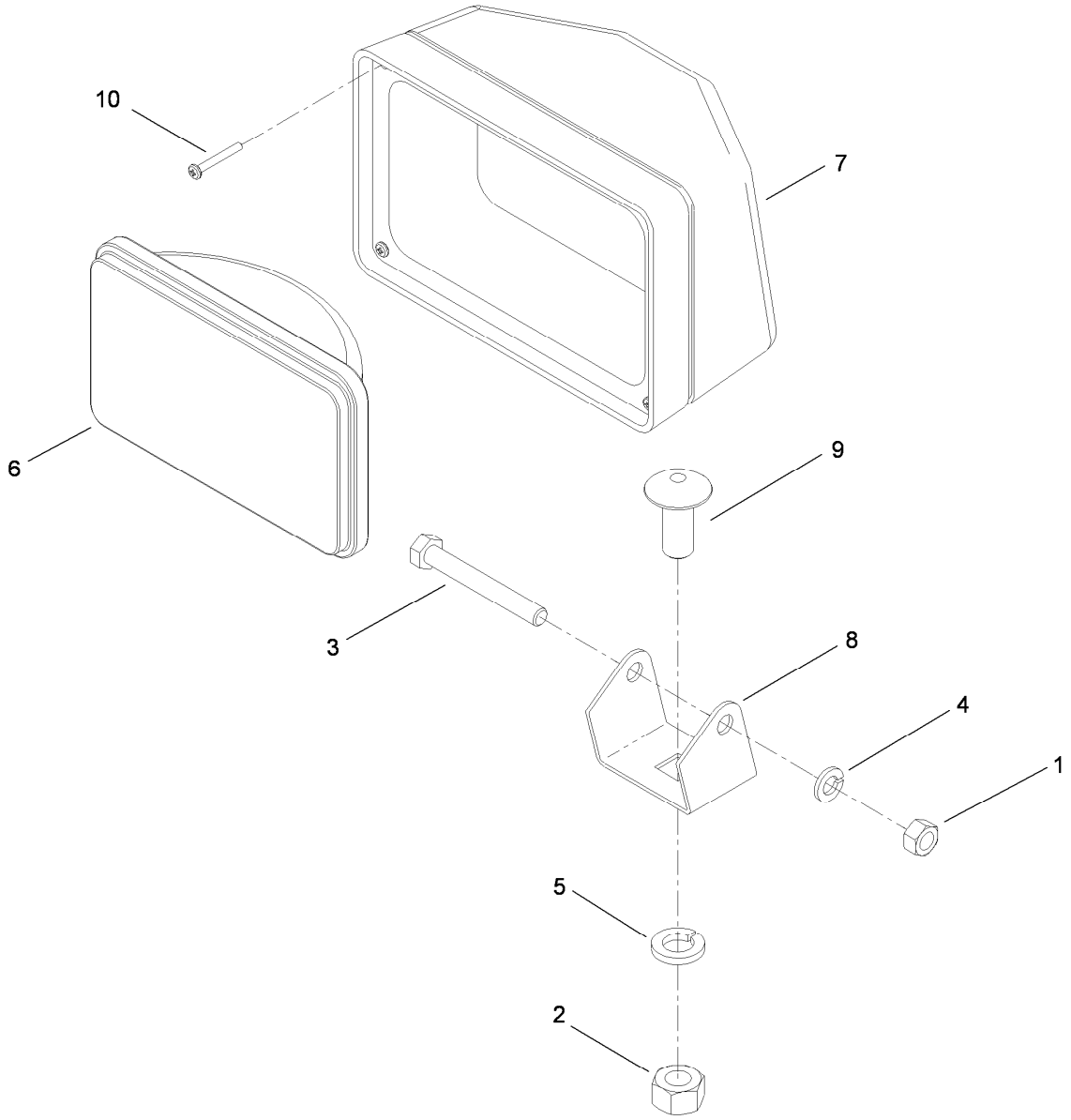

Head Light Assembly No. 92-6565

Ref.	*Part Number*	*Qty.*	*Description*
1	3217-6	1	Nut-Hex
2	3217-9	1	Nut-HH
3	322-12	1	Screw-HH
4	3253-4	1	Washer-Lock
5	3253-7	1	Washer-Lock
6	92-6595	1	Lamp-Beam, Sealed
7	92-6596	1	Bezel
8	92-6597	1	Bracket-Mounting
9	92-6598	1	Bolt-Carriage, Drilled
10	92-6599	4	Screw

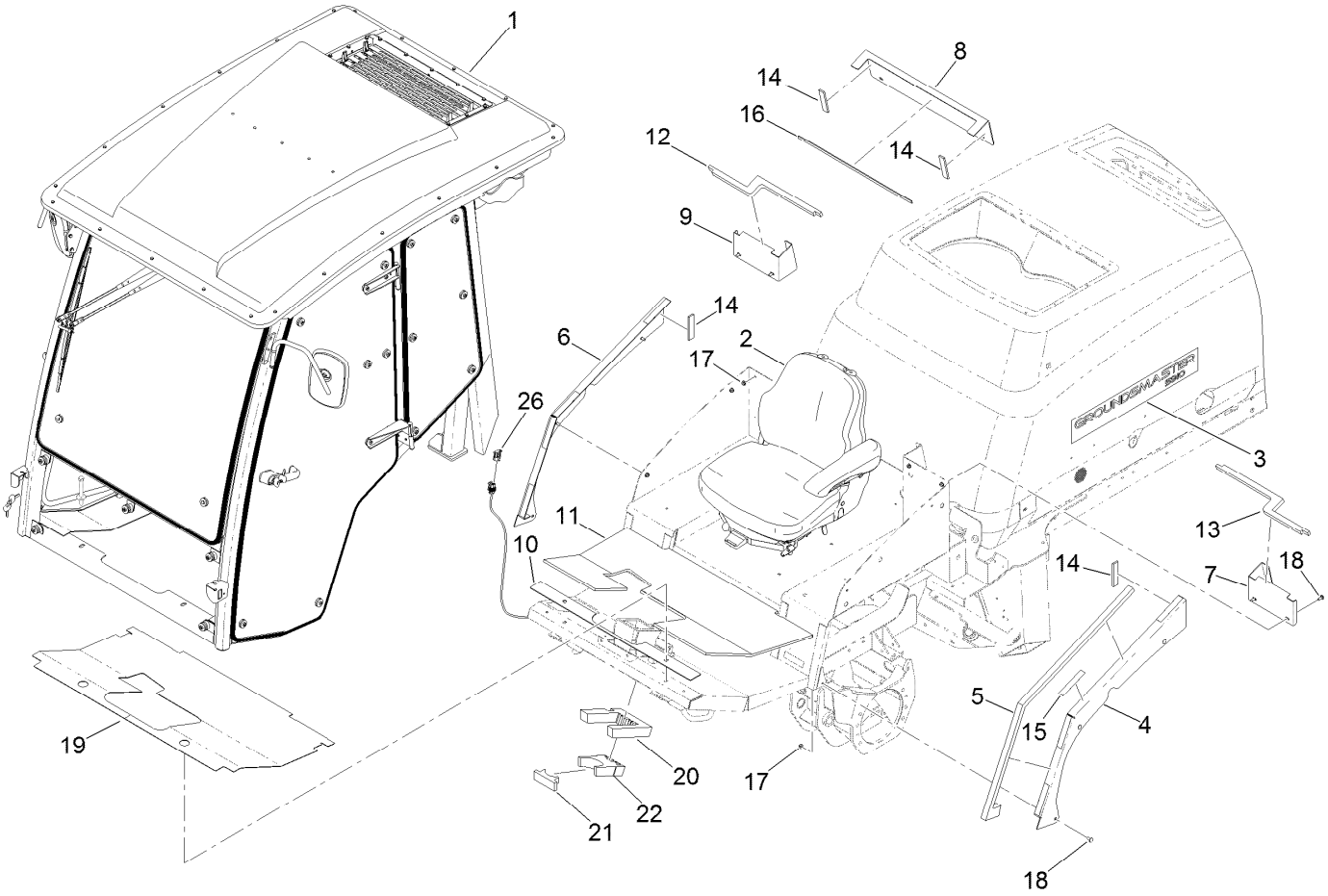

Cab Mounting Assembly
For Cab Model Only

Ref.	Part Number	Qty.	Description
1		1	Cab ASM ●
2	117-9429	1	Matrix Cloth Seat ASM
3	115-5448	2	Decal-Hood
4	132-3297-03	1	Panel-Transition, LH
5	132-3293	2	Foam-Seal, Side Panel
6	132-3296-03	1	Panel-Transition, RH
7	132-3299-03	1	Panel-Rear, LH
8	132-3294-03	1	Panel-Rear, Center
9	132-3298-03	1	Panel-Rear, RH
10	130-5605	1	Gasket-Front
11	130-5983	1	Foam-Floor
12	130-0534	1	Foam-Seal, Rear RH
13	130-0535	1	Foam-Seal, Rear LH
14	115-5465	4	Seal-Trim
15	130-6112	8	Tape-Double Stick
16	130-5724	1	Seal-Trim
17	104-8300	10	Nut-HF, NI
18	3230-23	10	Bolt-CARR
19	130-5984	1	Tread-Floor
20	130-6115	1	Foam-Steering, Rear
21	130-6116	1	Foam-Steering, Plug
22	130-6117	1	Foam-Steering, Front
26	32180-056	2	Cap

● Not serviced separately

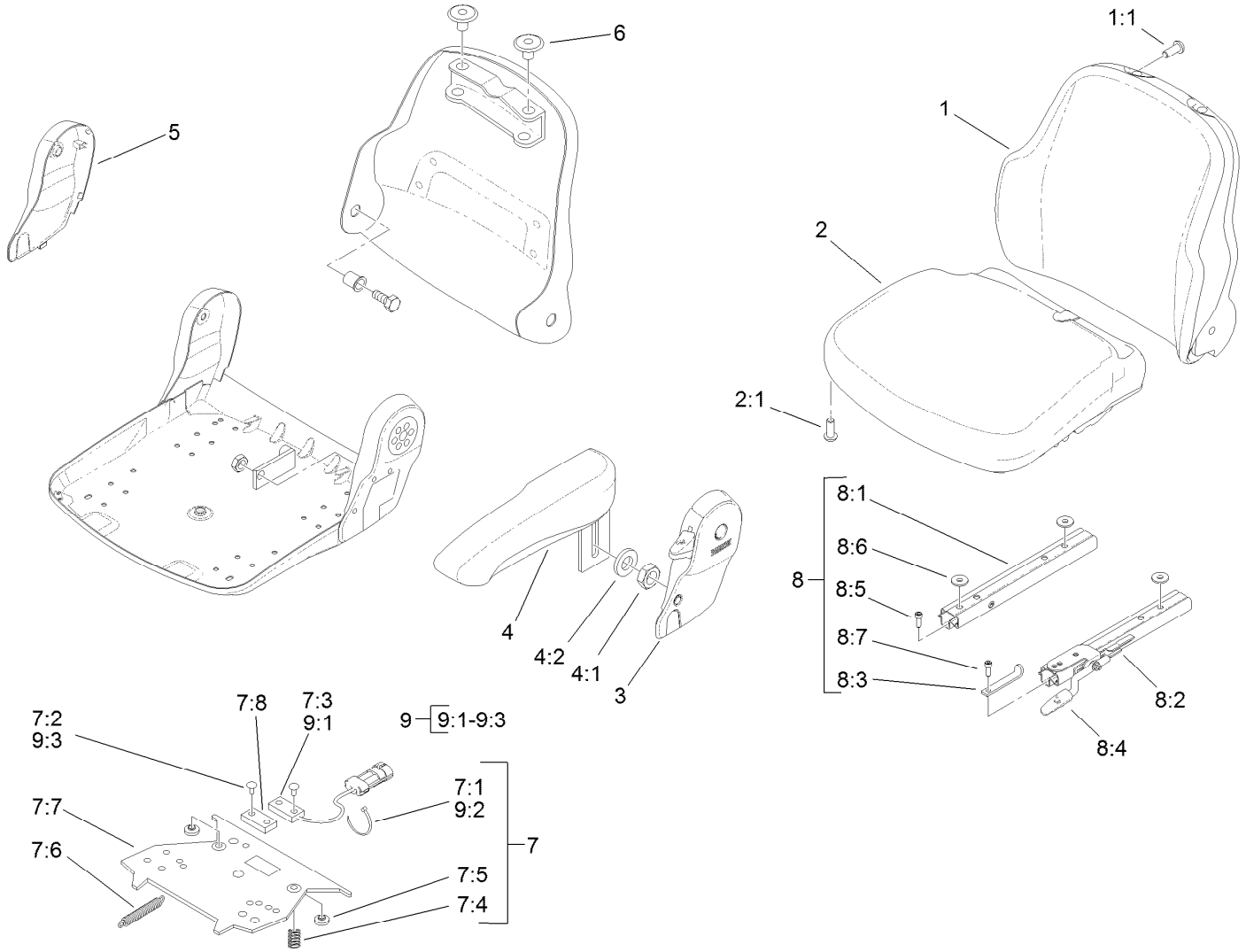

Cloth Premium Seat Assembly No. 117-9429

Ref.	Part Number	Qty.	Description
1	117-9415	1	Backrest Cushion ASM Matrix Cloth
1:1	119-7742	4	Screw-Cushion
2	117-9416	1	Seat Cushion ASM Matrix Cloth
2:1	119-7742	3	Screw-Cushion
3	108-8018	1	Cover-Armrest
4	108-8019	1	LH Armrest ASM
4:1	82-9650	1	Nut
4:2	107-1198	1	Washer
5	108-8021	1	Cover-Armrest
6	108-8022	2	Cover-Black
7	108-8024	1	Switch Kit
7:1		3	Wire Tie ●
7:2		4	Rivet ●
7:3		1	Sensor-Seat Switch ●
7:4		2	Spring-Compression ●
7:5		2	Bumper-Pressure Plate ●
7:6		1	Spring-Extension ●
7:7		1	Plate-Mounting ●
7:8		1	Magnet ●
8	108-8025	1	Adjustment Rail Set
8:1		1	Rail-Adjustment, RH ●
8:2		1	Rail-Adjustment, LH ●
8:3		1	Stop-Rail ●
8:4		1	Handle ●
8:5		3	Screw ●
8:6		3	Washer ●
8:7		1	Screw ●
9	110-6189	1	Switch Kit
9:1		1	Switch ●
9:2		3	Wire Tie ●
9:3		2	Rivet ●

● Not serviced separately

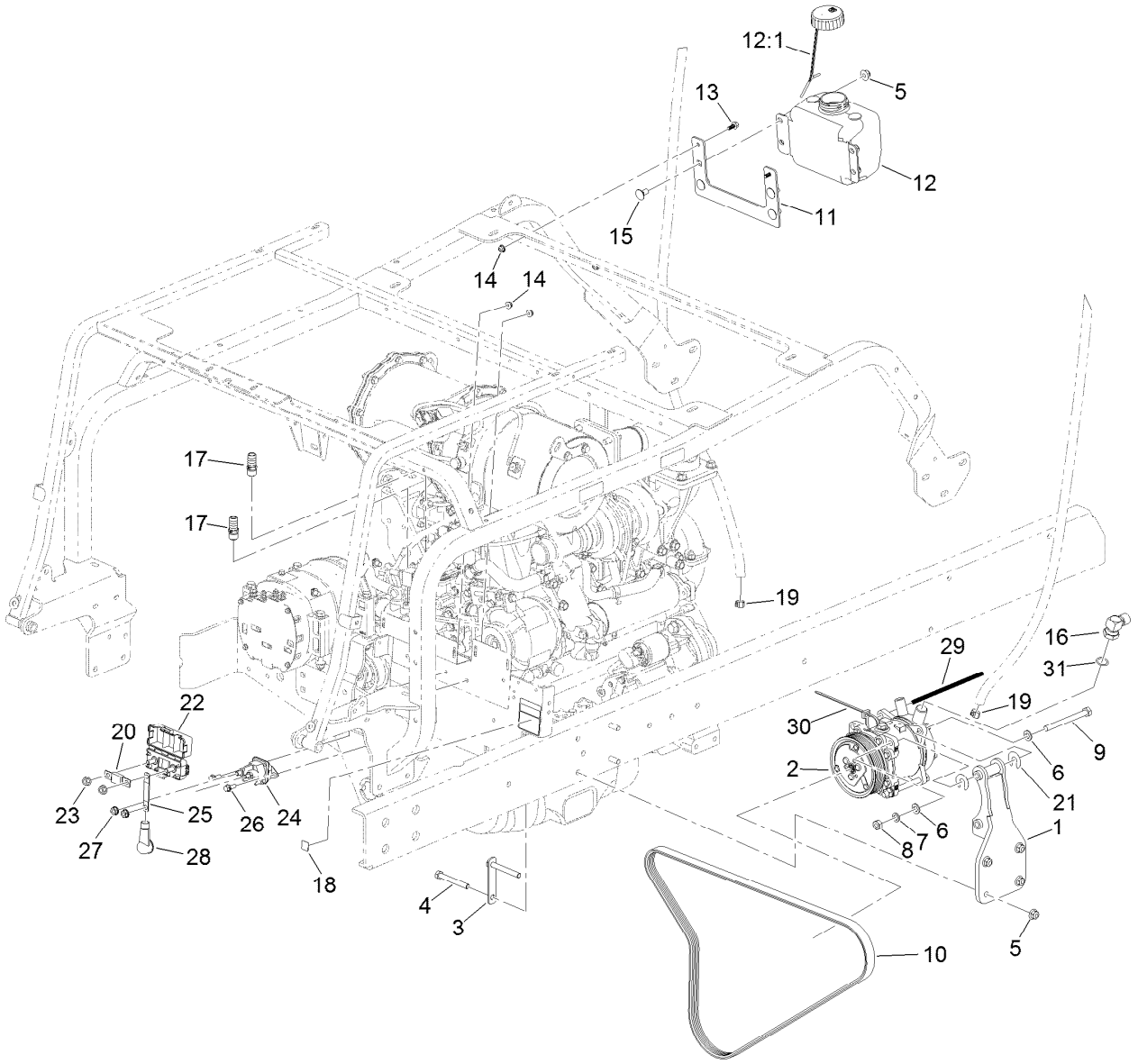

AC Compressor Mount and Cab Fluids Assembly For Cab Model Only

Ref.	Part Number	Qty.	Description
1	130-2482-03	1	Mount-Compressor
2	130-2487	1	Compressor
3	130-2483-03	2	Compressor-Mount, Strap
4	323-14	4	Screw-HH
5	104-8301	8	Nut-HF, NI
6	33095-00	4	Washer-Flat
7	48-9590	2	Washer-Lock
8	33015-00	2	Nut-Hex
9	33115-110	2	Screw-HH
10	130-9166	1	Belt-Poly V
11	130-5625-03	1	Bracket-Tank, Wiper Fluid
12	138-2702	1	Tank-Fluid, Washer
12:1	125-5258	1	Lid-Tank, Washer Fluid
13	99-6810	2	Screw-HHF
14	104-7201	4	Nut-HF, NI
15	3231-1	4	Screw-CARR

Ref.	Part Number	Qty.	Description
16	119-0128	1	Fitting-Elbow, 90 DEG
17	117-9410	2	Fitting-Straight
18	137-5499	1	Decal-Radio Memory
19	2412-108	2	Clamp-Worm
20	AU126232	1	Fuse-100A
21	119-7734	4	Shim
22	114-3318	1	Holder-Fuse, Mega
23	127-2371	2	Nut-HF
24	131-8342	1	Solenoid
25	114-5682	1	Strap-Jumper
26	3234-4	2	Screw-HHF
27	107-0380	2	Nut-HF
28	32180-008	1	Insulator-Lug, Red
29	115-8882	1	Conduit-Convoluted
30	3290-378	1	Tie-Cable
31	117-2780	1	O-Ring

Cab Frame, Mirror and Decal Assembly
For Cab Model Only

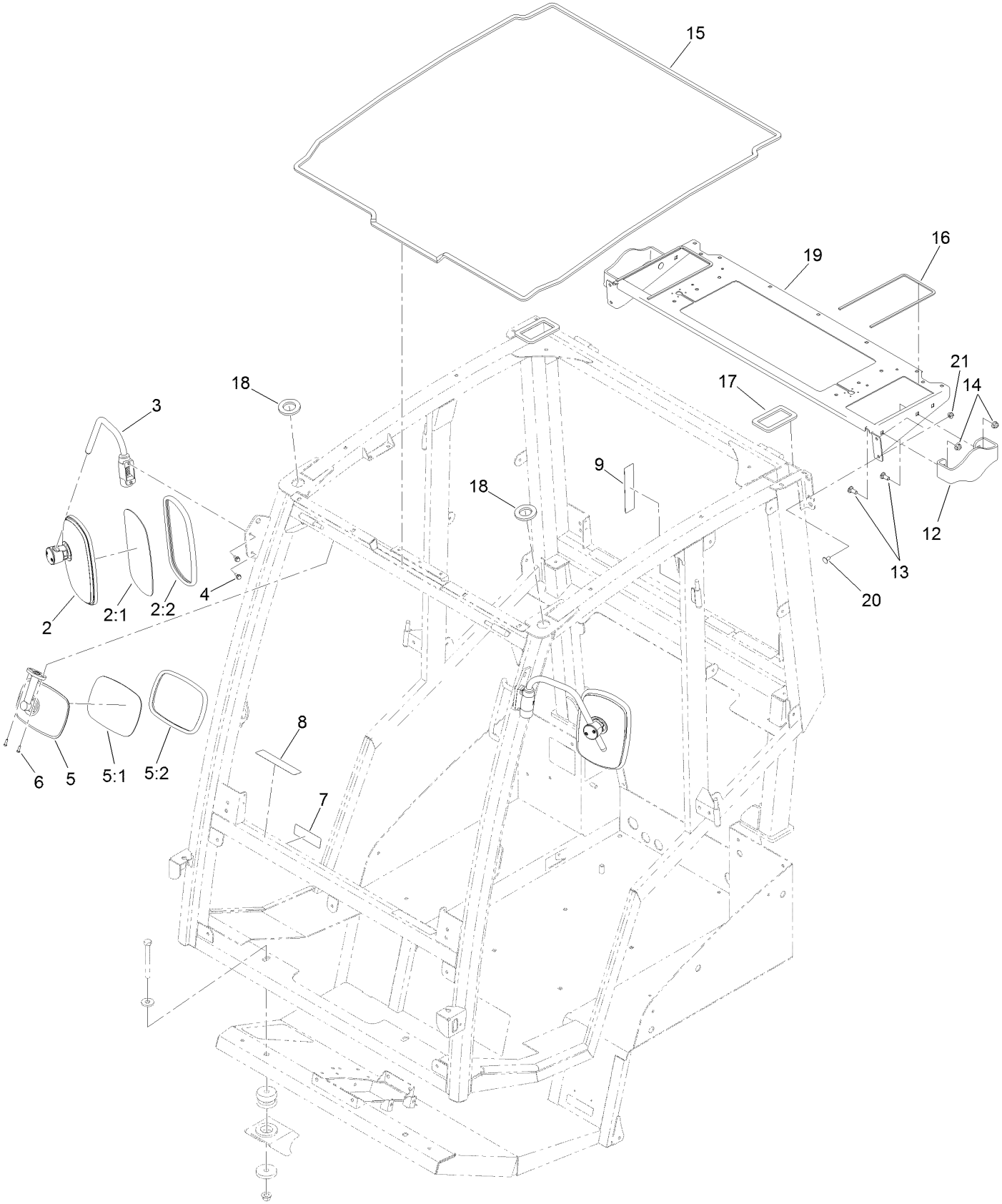

Cab Frame, Mirror and Decal Assembly For Cab Model Only (continued)

Ref.	Part Number	Qty.	Description
2	121-8341	2	Side Mirror ASM
2:1		1	Mirror-Glass ●
2:2		1	Gasket ●
3	121-8275	2	Arm-Mirror, Side
4	33103-016	4	Screw-HHF
5	121-8343	1	Interior Mirror ASM
5:1		1	Mirror ●
5:2		1	Gasket ●
6	32144-32	2	Screw-PPH
7	130-5356	1	Decal-Traction Pedal
8	130-0611	4	Decal-Window, Pin
9	130-0594	1	Decal-Warning
12	130-5791-03	2	Deck-Stop
13	3231-12	4	Bolt-CARR
14	104-8301	4	Nut-HF, NI
15	130-0586	1	Seal-Foam, Frame Roof
16	130-0587	2	Seal-Foam, Roof Air Filter
17	130-5855	2	Seal-Tube, Rear
18	133-0982	2	Tube-Seal, Front
19	136-1768-03	1	Shelf-Mount, Fan
20	3230-18	4	Screw-CARR
21	104-8300	4	Nut-HF, NI

● Not serviced separately

Windshield Wiper, Filter and Air Conditioning Assembly For Cab Model Only

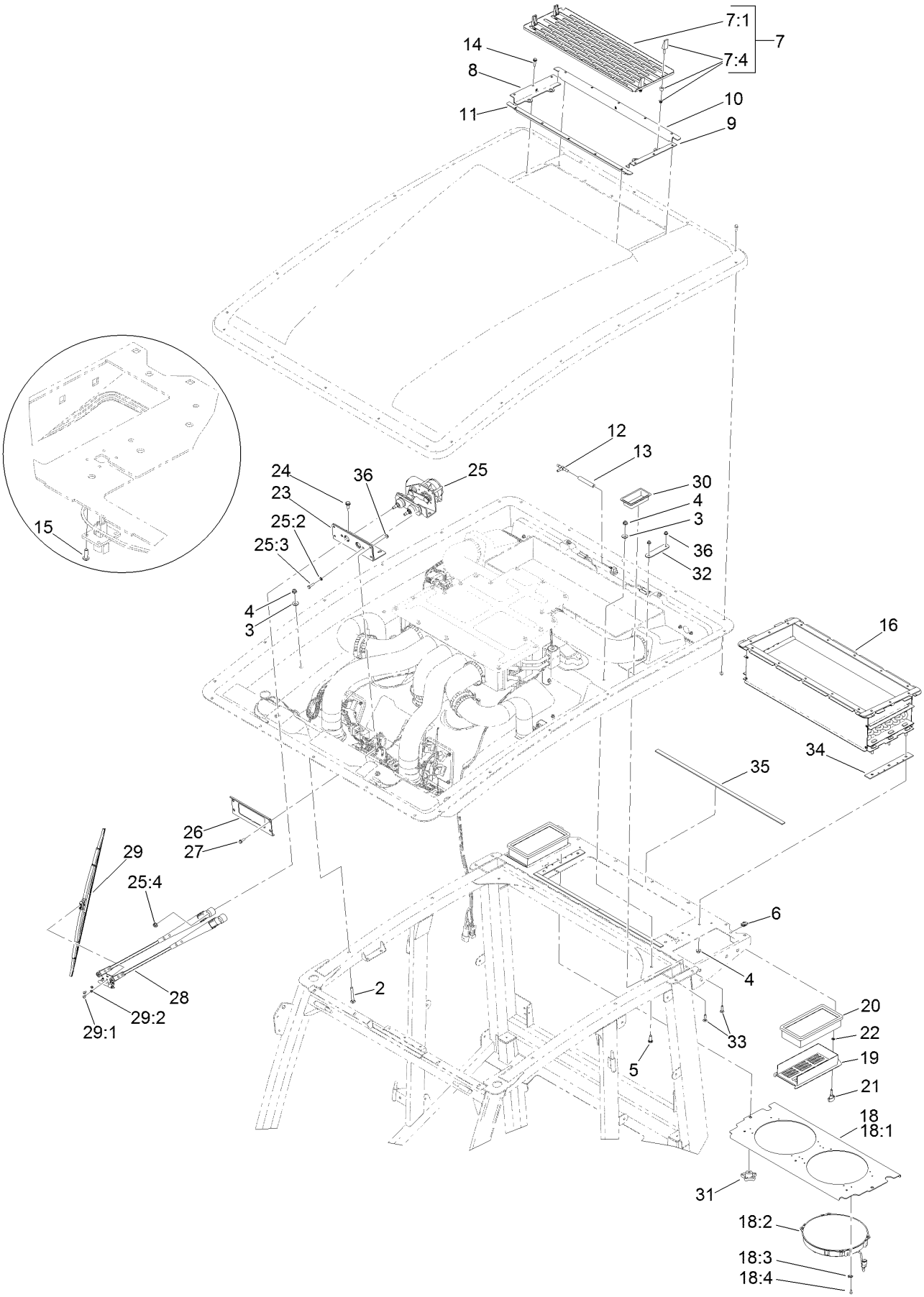

Windshield Wiper, Filter and Air Conditioning Assembly For Cab Model Only (continued)

Ref.	Part Number	Qty.	Description
2	3230-9	4	Screw-CARR
3	3256-3	17	Washer-Flat
4	104-8300	21	Nut-HF, NI
5	3230-22	13	Screw-CARR
6	107069	2	Clip
7		1	Screen ASM ●
7:1	132-3530-03	1	Screen
7:4	74-5950	4	Latch-Swell
8	132-3534-03	1	Seal-Side, Right
9	132-3533-03	1	Seal-Side, Left
10	132-3532-03	1	Seal-Rear
11	132-3531-03	1	Seal-Front
12	99-5005	1	Fitting-Tee, Barbed
13	114-3765	1	Hose-Fuel
14	120-4654	16	Screw-HHF
15	363-8245	8	Screw-TAP
16	132-3468	1	A/C Duct ASM
18	132-3488	1	Panel-Fan
18:1	132-3486-03	1	Plate-Mount, Fan
18:2	132-3607	2	Fan-Condenser
18:3	132-3606	8	Tab-Fan
18:4	105-6849	8	Screw-Forming, Thread
19	125-9825-03	2	Cover-Air, Fresh
20	121-8457	2	Filter-Air
21	126-5846	2	Knob-T
22	106-8737	2	Nut-Retainer
23	130-5871	1	Bracket-Wiper
24	32144-11	3	Screw-HWH
25	125-7452	1	Wiper Motor ASM
25:2	3253-3	1	Washer-Lock
25:3	33113-025	1	Screw-HH
25:4	112-2844	2	Nut-HF
26	130-6068-03	1	Plate-Washer, Wiper Motor
27	32105-15	4	Screw-HWH
28	125-7453	1	Arm-Wiper
29	125-7454	1	Blade-Wiper
29:1	47-2830	2	Screw
29:2	43-5920	2	Washer-Lock, Spring
30	130-5661	2	Tube-Sleeve
31	117-5976	2	Knob-Handle
32	130-5854	2	Brace-Seal
33	3229-30	4	Screw-CARR
34	132-3608	2	Seal-Edge
35	132-3609	2	Seal-Strip
36	104-7201	8	Nut-HF, NI

● Not serviced separately

Air Conditioning Duct Assembly No. 132-3468
For Cab Model Only

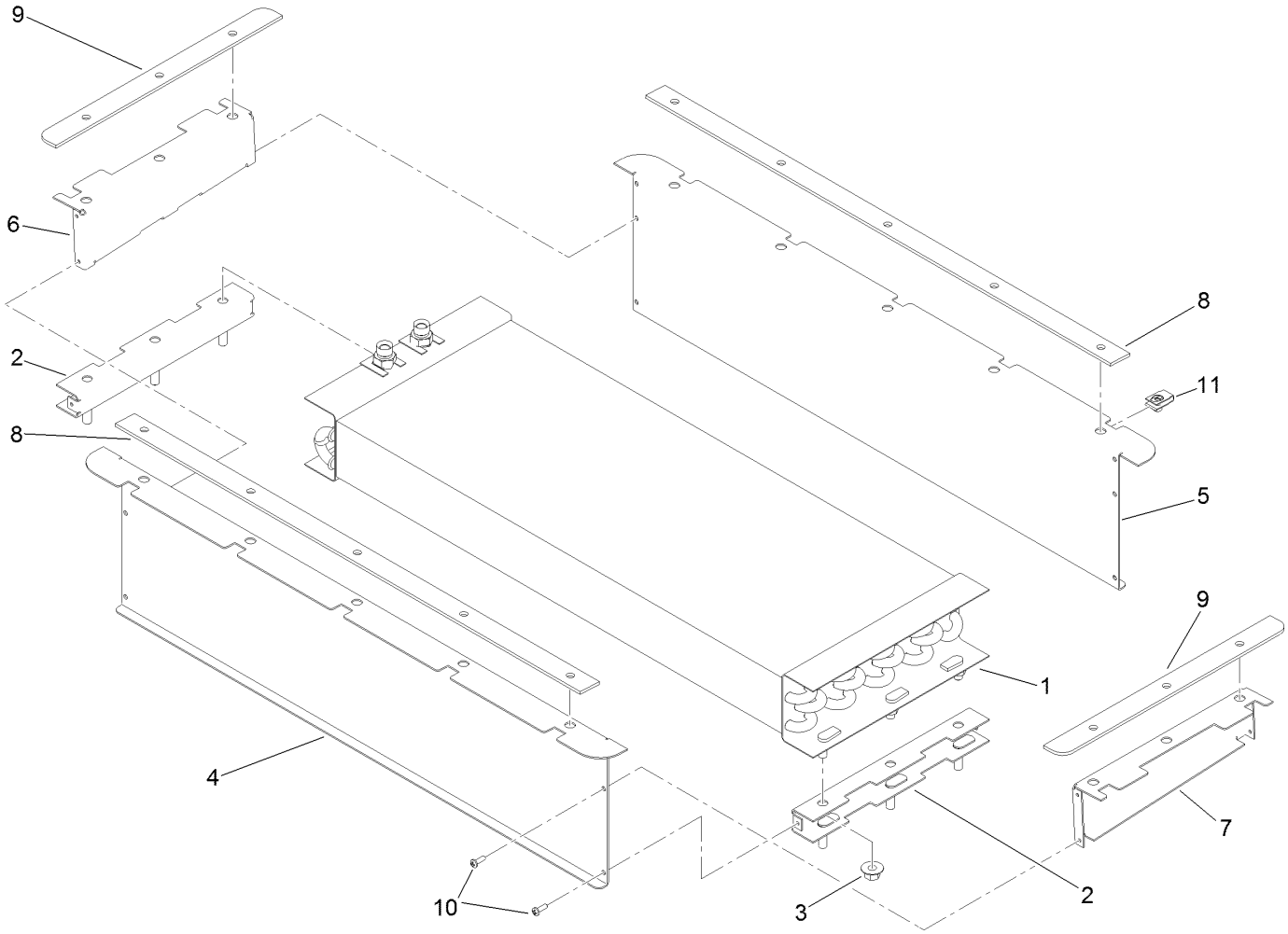

Air Conditioning Duct Assembly No. 132-3468
For Cab Model Only (continued)

Ref.	Part Number	Qty.	Description
1	121-8447	1	Core-Condenser
2	132-3469-03	2	Leg-Lower
3	32128-44	6	Nut
4	132-3462-03	1	Wall-Front
5	132-3463-03	1	Wall-Back
6	132-3464-03	1	Wall-Side, Right
7	132-3465-03	1	Wall-Side, Left
8	132-3466	2	Seal-Strip
9	132-3467	2	Seal-Edge
10	363-8245	12	Screw-TAP
11	107069	16	Clip

Window and Door Assembly
For Cab Model Only

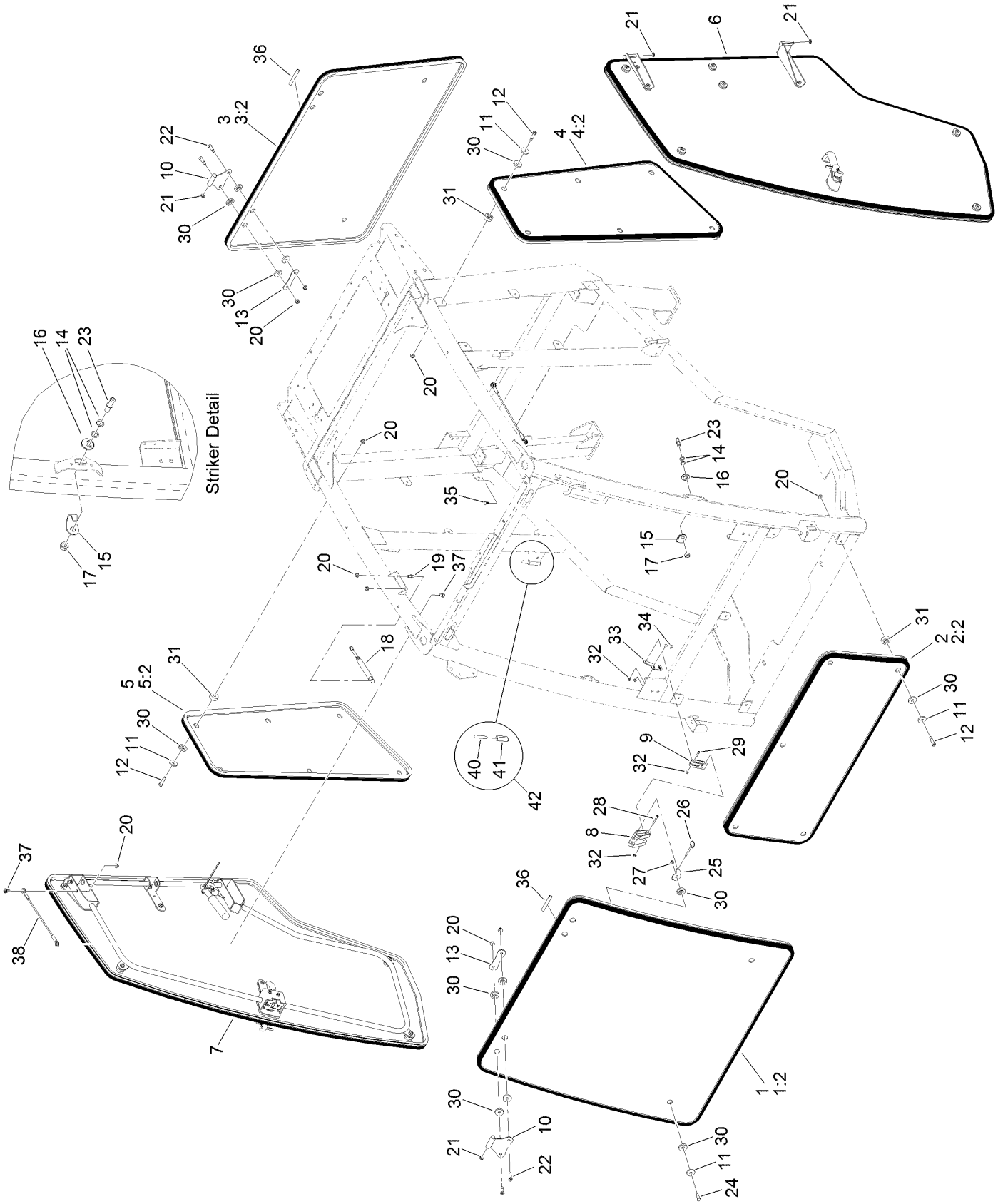

Window and Door Assembly
For Cab Model Only (continued)

Ref.	Part Number	Qty.	Description
1	130-5680	1	Upper Front Window ASM
1:2	121-8212	1	Seal-Trim
2	130-5681	1	Lower Front Window ASM
2:2	121-8211	1	Trim-Window, Front
3	130-5690	1	Rear Window ASM
3:2	121-8213	1	Trim-Window, Rear
4	130-6187	1	LH Side Window ASM
4:2	130-0502	1	Trim-Window, Stationary
5	130-6186	1	RH Side Window ASM
5:2	130-0502	1	Trim-Window, Stationary
6		1	LH Door ASM ●
7		1	RH Door ASM ●
8	125-9792	4	Handle-Window
9	125-9793	4	Link-Window
10	121-8535-03	4	Hinge-Window
11	130-5815	21	Washer-Backup
12	125-9521	17	Screw-Shldr HSH
13	127-9933	4	Plate-Backer, Windshield
14	73-0040	4	Washer-Thrust
15	121-8393	2	Guard-Striker
16	125-9992	2	Adjuster-Stud
17	106-0327	2	Nut-Hex
18	130-6083	2	Spring-Gas, Door

Ref.	Part Number	Qty.	Description
19	98-3104	2	Stud-Ball
20	104-8300	31	Nut-HF, NI
21	121-8441	8	Washer-Spacer
22	125-9520	8	Screw-Shoulder, HSH
23	132-3718	2	Stud-Striker
24	119-9812	4	Bolt-Shoulder
25	125-9987	4	Mount-Latch
26	127-9850	4	Pin-Release, Quick
27	104-7201	4	Nut-HF, NI
28	3274-59	4	Screw-HSH
29	3274-14	4	Screw-HSH
30	125-9982	41	Bushing-Flange
31	125-9537	17	Bushing-Flange
32	120-9681	16	Nut-Lock, NI
33	130-0590	4	Mount-Tab
34	1-807513	8	Bolt-CARR
35	114-4899	2	Rivet-Push
36	130-5578	2	Tubing-Seal, Rubber
37	120-9471	4	Bolt-Shoulder
38	130-5726	2	Lanyard
40	133-1110	1	Pin-Hinge
41	121-8439	1	Receiver-Pivot, Hinge
42	121-8440	1	Pivot-Hinge

● Not serviced separately

Left Hand Door Assembly
For Cab Model Only

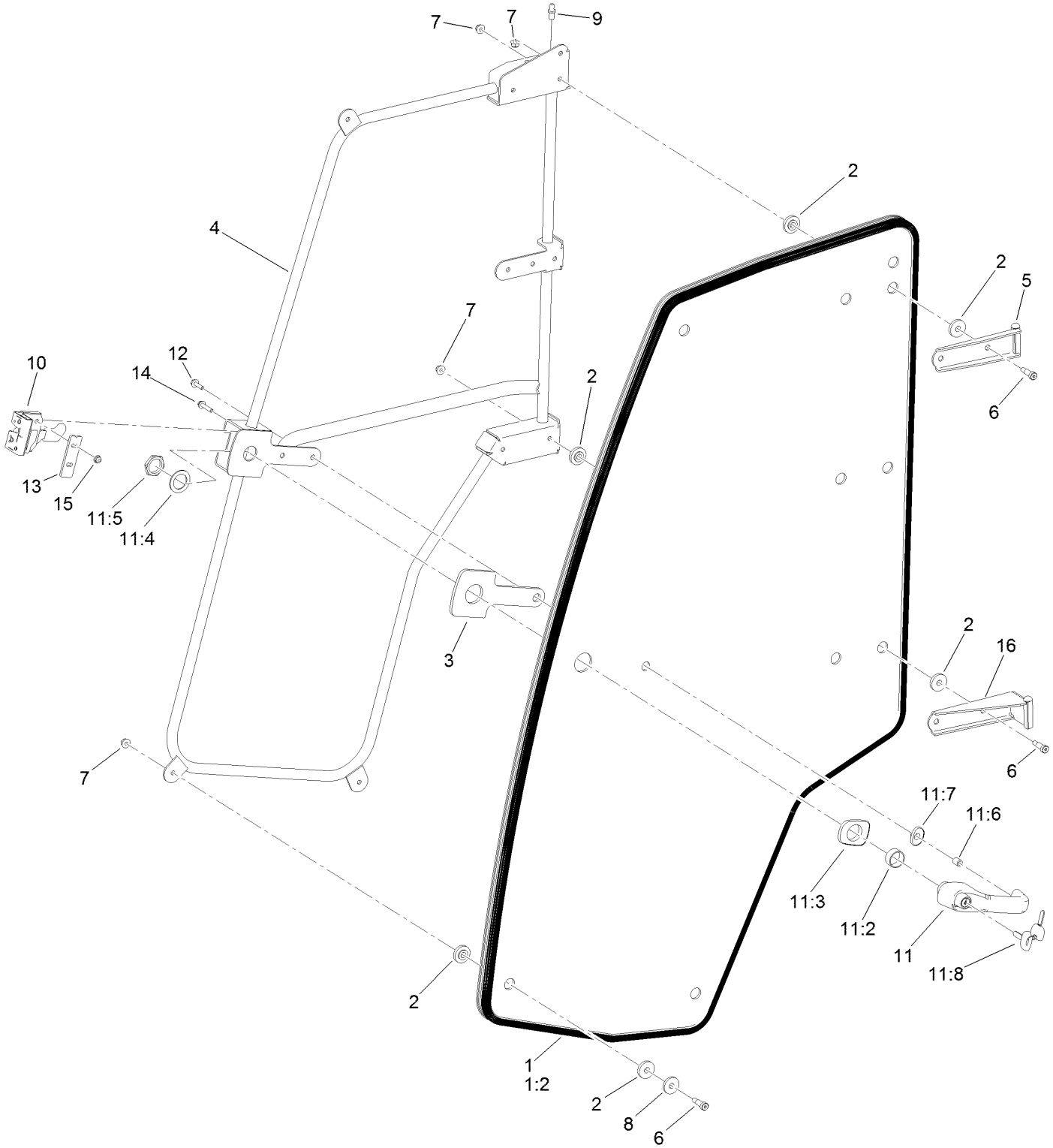

Left Hand Door Assembly
For Cab Model Only (continued)

Ref.	Part Number	Qty.	Description
1	130-6185	1	LH Door ASM
1:2	121-8317	1	Trim-Window, Door
2	125-9982	20	Bushing-Flange
3	121-8331	1	Gasket-Handle
4	125-7358-03	1	Frame-Door, LH
5	130-0525-03	1	Hinge-Door, Top (LH)
6	125-9520	10	Screw-Shoulder, HSH
7	104-8300	11	Nut-HF, NI
8	130-5815	6	Washer-Backup
9	98-3104	1	Stud-Ball
10	121-8391	1	Latch-LH
11	121-8630	1	Handle ASM

Ref.	Part Number	Qty.	Description
11:2	121-8628	1	Cylinder-Mounting, Key
11:3	121-8322	1	Grommet-Mounting, Large
11:4	121-8327	1	Washer
11:5	121-8328	1	Nut
11:6	121-8627	1	Cylinder-Mounting, End
11:7	121-8323	1	Grommet-Mounting, Small
11:8	125-9531	1	Key-Set
12	33103-025	1	Screw-HHF
13	121-8395	1	Plate-Support, Latch
14	3234-21	2	Screw-HHF
15	104-7201	2	Nut-HF, NI
16	130-0526-03	1	Hinge-Door, Bottom (LH)

Right Hand Door Assembly
For Cab Model Only

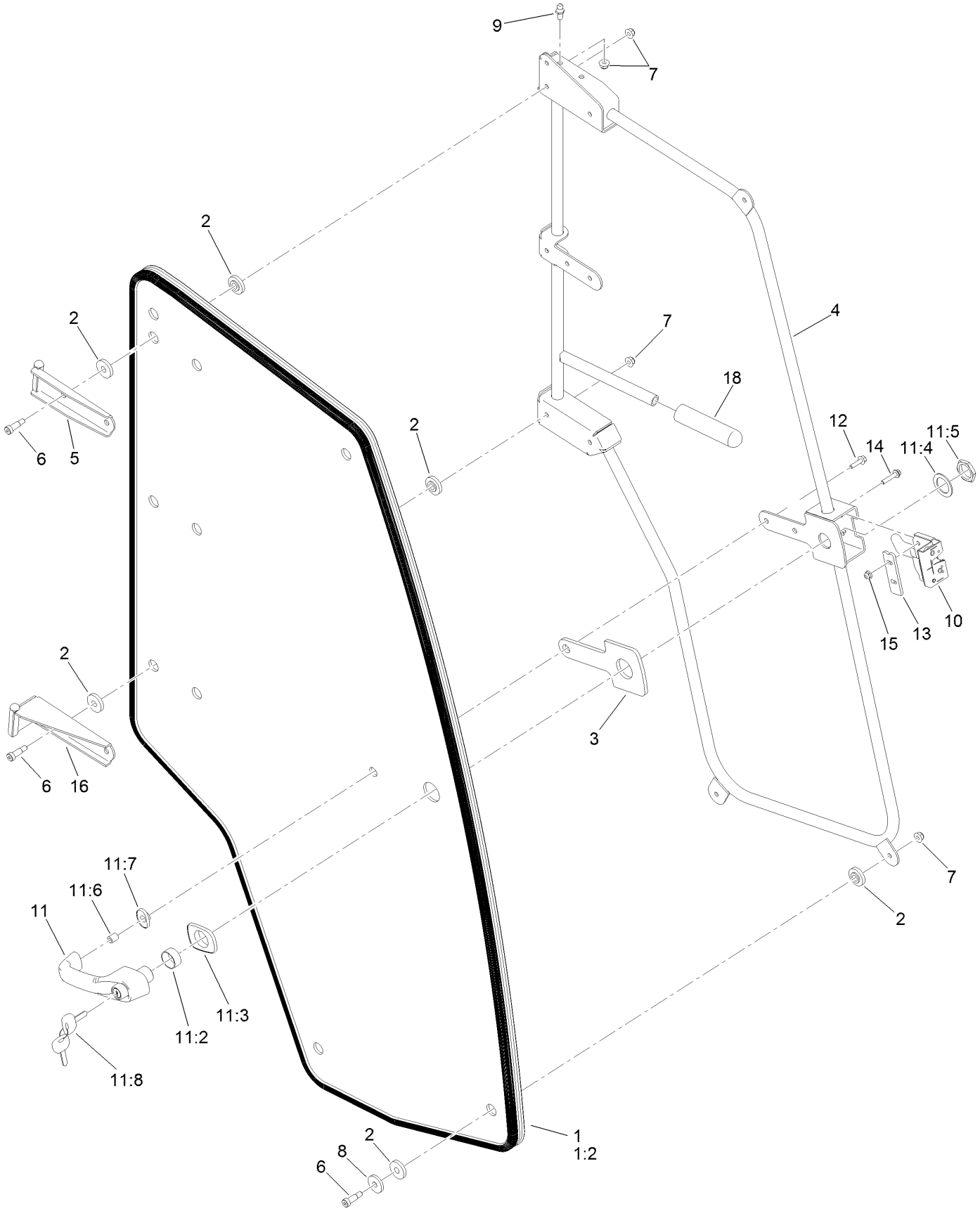

Right Hand Door Assembly
For Cab Model Only (continued)

Ref.	Part Number	Qty.	Description
1	130-6184	1	RH Door ASM
1:2	121-8317	1	Trim-Window, Door
2	125-9982	20	Bushing-Flange
3	121-8331	1	Gasket-Handle
4	125-7359-03	1	Frame-Door, RH
5	130-0529-03	1	Hinge-Door, Top (RH)
6	125-9520	10	Screw-Shoulder, HSH
7	104-8300	11	Nut-HF, NI
8	130-5815	6	Washer-Backup
9	98-3104	1	Stud-Ball
10	121-8390	1	Latch-RH
11	121-8630	1	Handle ASM
11:2	121-8628	1	Cylinder-Mounting, Key
11:3	121-8322	1	Grommet-Mounting, Large
11:4	121-8327	1	Washer
11:5	121-8328	1	Nut
11:6	121-8627	1	Cylinder-Mounting, End
11:7	121-8323	1	Grommet-Mounting, Small
11:8	125-9531	1	Key-Set
12	33103-025	1	Screw-HHF
13	121-8395	1	Plate-Support, Latch
14	3234-21	2	Screw-HHF
15	104-7201	2	Nut-HF, NI
16	130-0530-03	1	Hinge-Door, Bottom (RH)
18	110-1037	1	Grip-Handle

Left Side Hose Assembly
For Cab Model Only

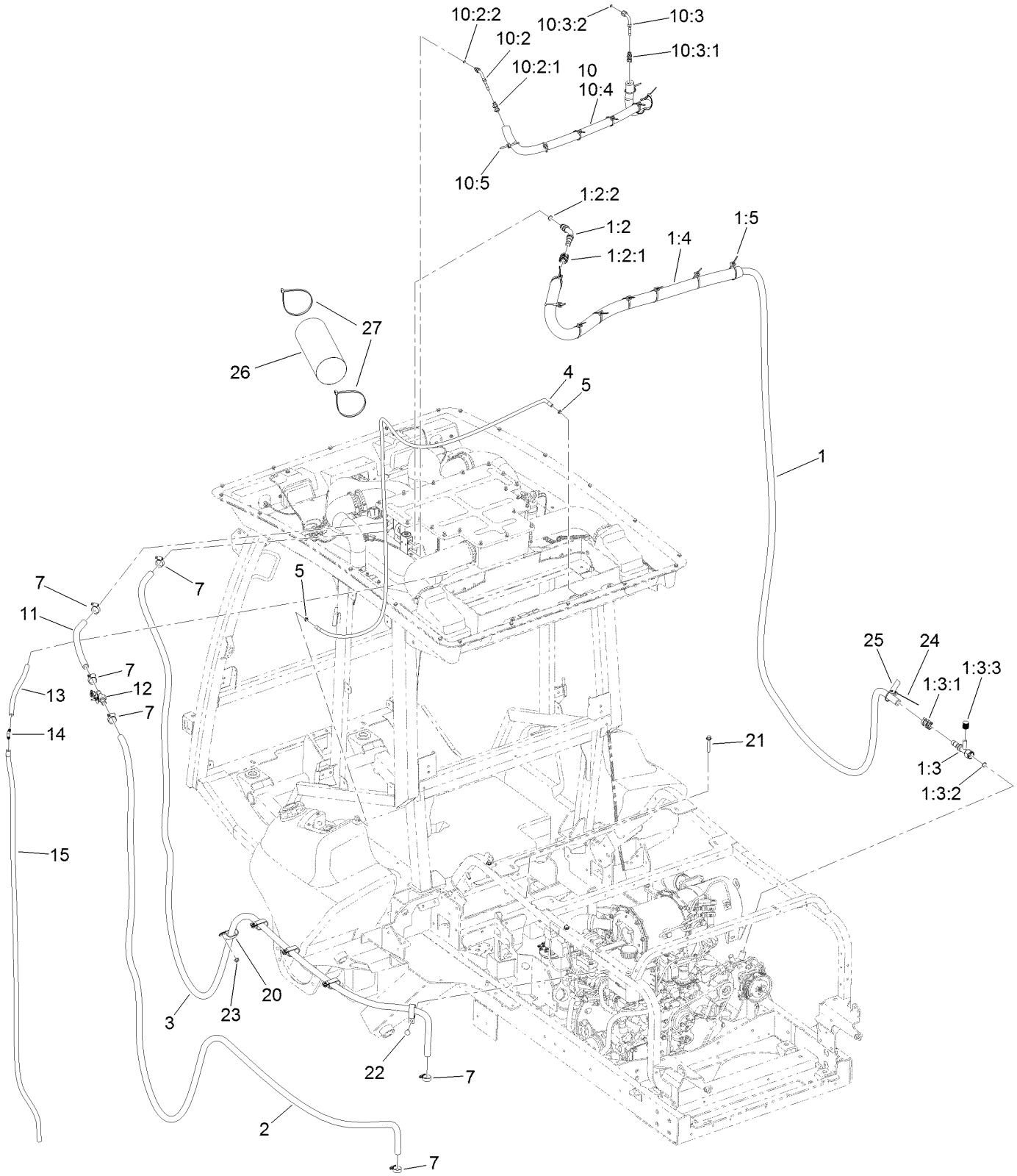

Left Side Hose Assembly
For Cab Model Only (continued)

Ref.	Part Number	Qty.	Description
1	130-5620	1	A/C Hose ASM
1:2	130-5754	1	Fitting-Male, 45 DEG
1:2:1	130-5775	1	Fitting Kit
1:2:2	117-2780	1	O-Ring
1:3	130-5755	1	Fitting-Female, Straight
1:3:1	130-5775	1	Fitting Kit
1:3:2	117-2780	1	O-Ring
1:3:3	117-2784	1	Cap-Side, Low
1:4	130-5959	1	Cover-Foam
1:5	3290-378	8	Tie-Cable
2	130-5622	1	Hose-Heater
3	130-5946	1	Hose-Heater
4	130-5813	1	Hose-Fuel
5	2412-98	2	Clamp-Hose
7	2412-129	6	Clamp-Hose
10	125-9702	1	Hose ASM
10:2	130-5753	1	Fitting-45 DEG
10:2:1	130-5772	1	Fitting Kit
10:2:2	117-2778	1	O-Ring

Ref.	Part Number	Qty.	Description
10:3	130-5751	1	Fitting-Female, 90 DEG
10:3:1	130-5772	1	Fitting Kit
10:3:2	117-2778	1	O-Ring
10:4	130-5958	1	Cover-Foam
10:5	3290-378	8	Tie-Cable
11	125-9706	1	Hose-Heater
12	120-4947	1	Valve-Heater
13	125-9865	1	Hose-Drain
14	130-0578	1	Fitting-Barb, 90 DEG
15	125-9866	1	Hose-Drain
20	2412-137	5	Clamp-R, Double
21	3234-39	4	Screw-HHF
22	3231-21	1	Screw-CARR
23	104-8301	5	Nut-HF, NI
24	3290-378	1	Tie-Cable
25	133-0779	1	Tag-Hang, Oil Refrigerant
26	133-1025	1	Wrap-Abrasion
27	94-3890	2	Tie-Cable

Pre-Filter Screen Assembly
For Cab Model Only

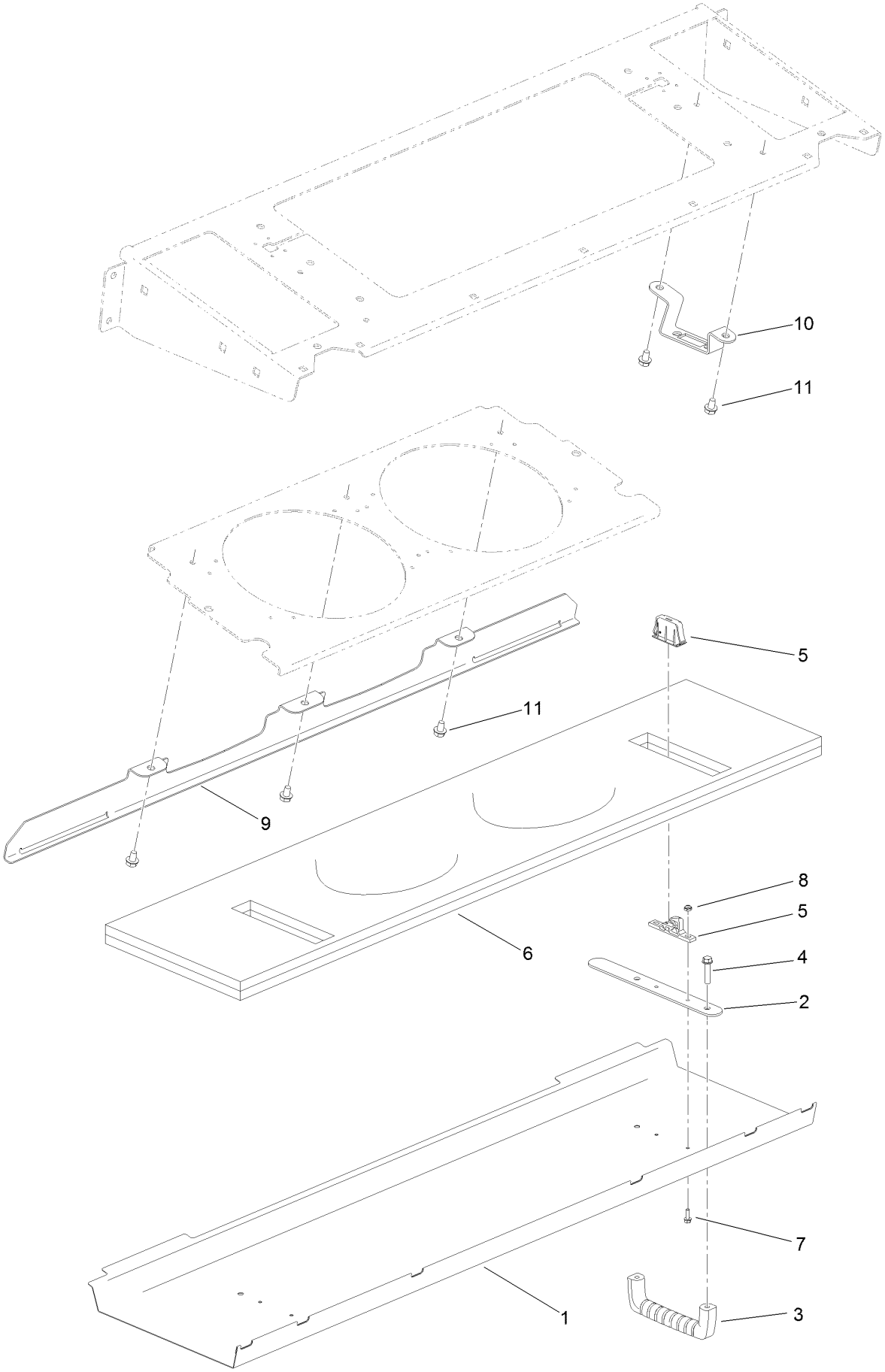

Pre-Filter Screen Assembly
For Cab Model Only (continued)

Ref.	Part Number	Qty.	Description
1	130-0640-03	1	Screen
2	130-0642-03	2	Backplate
3	65-5100	2	Handle-Door
4	46-8092	4	Screw-Plastite
5	130-0643	2	Latch-Push To Close
6	130-5875	1	Pre-Filter
7	112-3169	4	Screw-HHF, Serrated
8	3296-54	4	Nut-Lock
9	132-3630-03	1	Screen-Mount, Front
10	136-2171	2	Mount-Latch
11	32104-82	7	Screw-HHF

Right Side Hose Assembly
For Cab Model Only

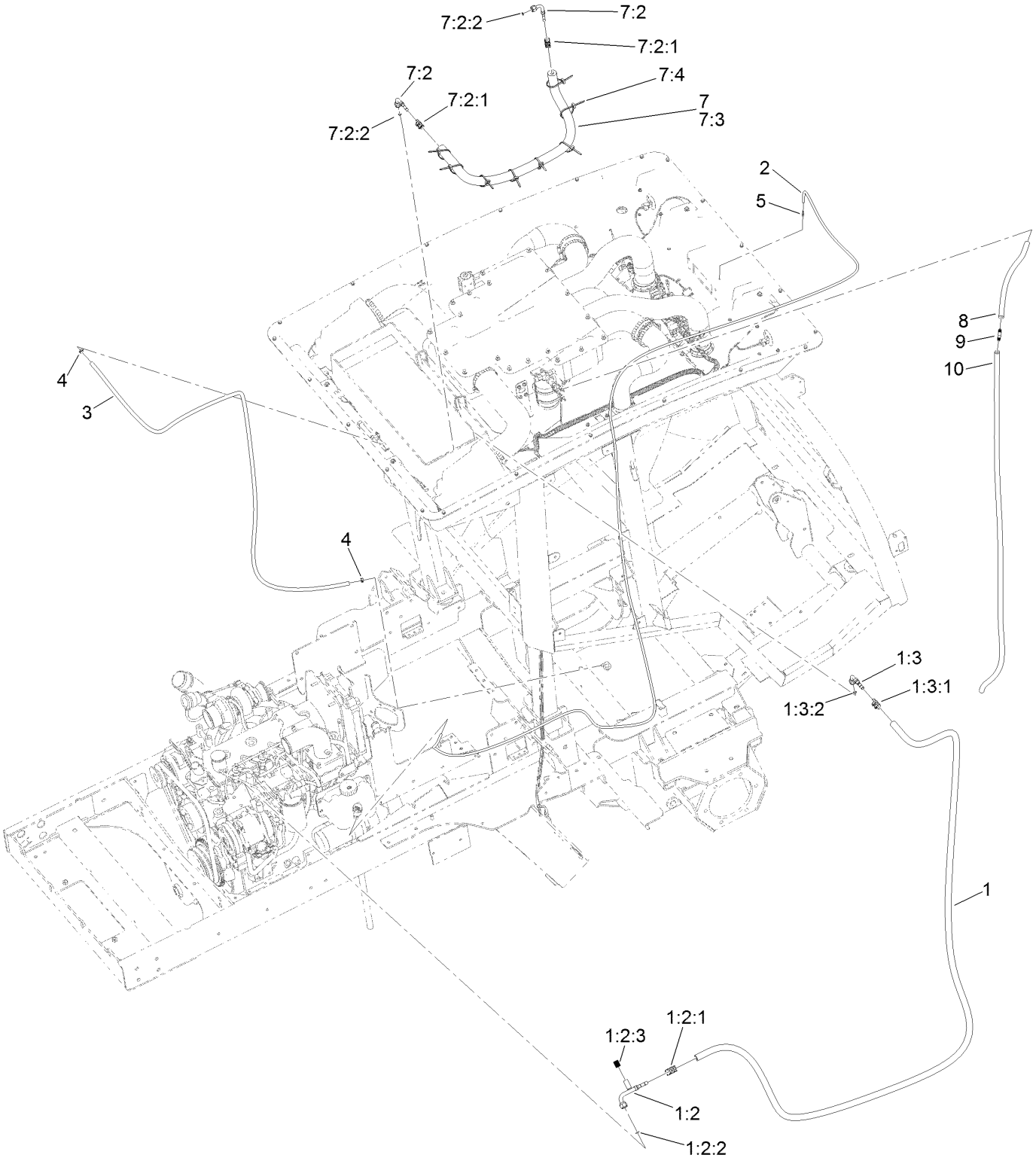

Right Side Hose Assembly
For Cab Model Only (continued)

Ref.	Part Number	Qty.	Description
1	130-5621	1	A/C Hose ASM
1:2	130-5758	1	Fitting-Female, 90 DEG
1:2:1	130-5773	1	Fitting Kit
1:2:2	117-2779	1	O-Ring
1:2:3	117-2783	1	Cap-Side, High
1:3	130-5752	1	Fitting-Female, 90 DEG
1:3:1	130-5773	1	Fitting Kit
1:3:2	117-2778	1	O-Ring
2	130-5624	1	Hose-Fluid, Wiper
3	130-5813	1	Hose-Fuel
4	2412-98	2	Clamp-Hose
5	127-9905	1	Fitting-Hose, Barb
7	125-9703	1	Hose ASM
7:2	130-5751	2	Fitting-Female, 90 DEG
7:2:1	130-5772	1	Fitting Kit
7:2:2	117-2778	1	O-Ring
7:3	130-5958	1	Cover-Foam
7:4	3290-378	8	Tie-Cable
8	125-9865	1	Hose-Drain
9	130-0578	1	Fitting-Barb, 90 DEG
10	125-9866	1	Hose-Drain

Roof and Headliner Assembly
For Cab Model Only

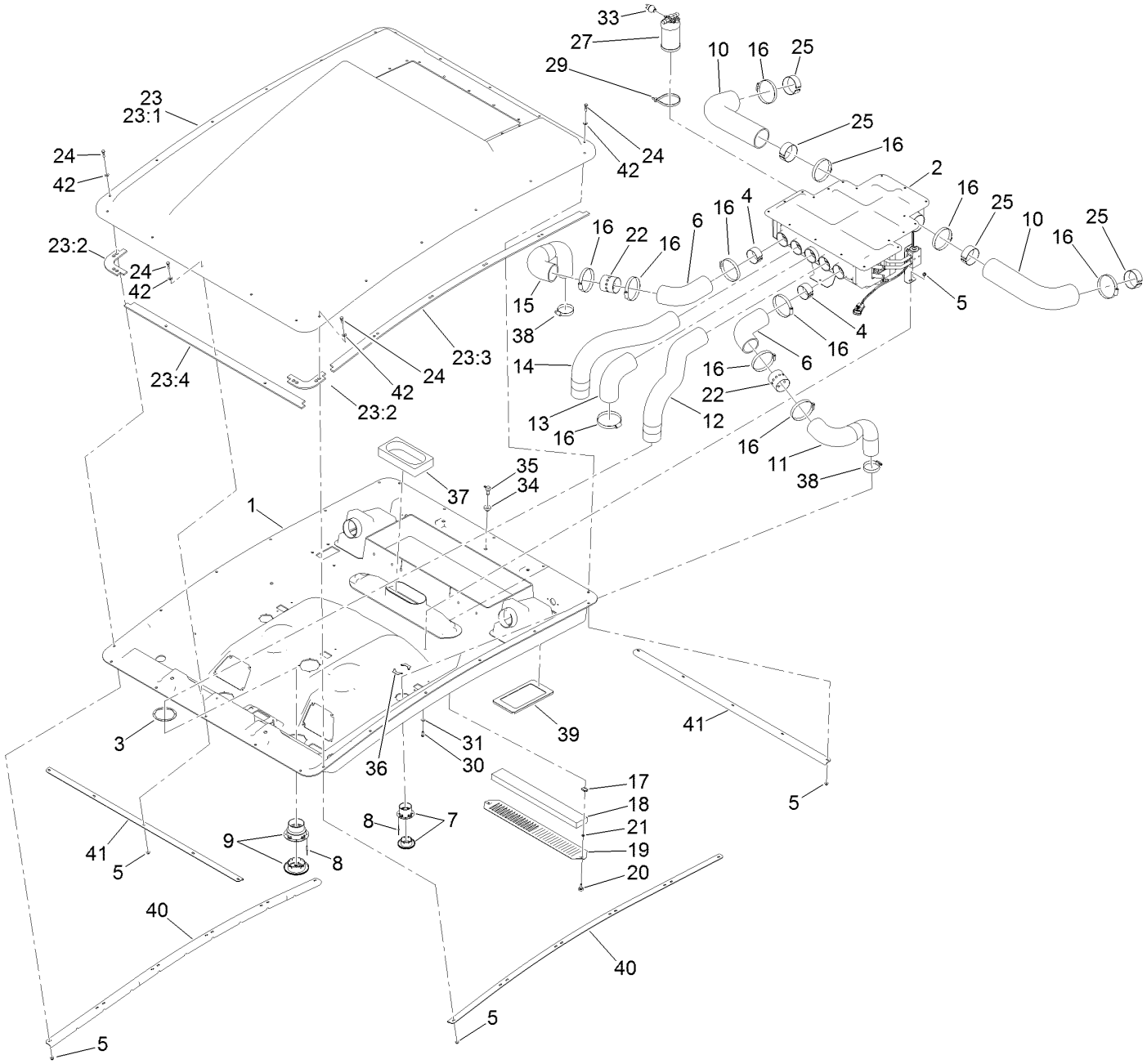

Roof and Headliner Assembly For Cab Model Only (continued)

Ref.	Part Number	Qty.	Description
1	121-8470	1	Headliner
2	121-8495	1	Box-Mixing, Heater A/C
3	130-0558	3	Backplate-Rivet
4	130-5938	2	Tube-Support
5	104-7201	24	Nut-HF, NI
6	130-5860	2	Hose-Vent
7	130-0455	2	Louver-Round, Snap-In
8	125-7503	20	Rivet-Pop
9	130-0465	3	Louver-Round, Snap-In (4 Inch)
10	121-8473	2	Hose-Intake, Fresh Air
11	130-5861	1	Hose-Vent, Outer (LH)
12	121-8477	1	Hose-Vent, Defrost (LH)
13	130-0437	1	Hose-Vent, Center
14	121-8478	1	Hose-Vent, Defrost (RH)
15	130-5862	1	Hose-Vent, Outer (RH)
16	2412-110	11	Clamp-Band/Screw
17	107069	2	Clip
18	125-9532	1	Filter-Cab, Inside
19	125-9604-03	1	Plate-Cover, Recirculation
20	125-7438	2	Knob-Screw, Thumb
21	106-8737	2	Nut-Retainer
22	130-5927	2	Adapter-Bleed
23	132-3601	1	Roof ASM
23:1	132-3602	1	Roof
23:2	130-5961	4	Seal-Corner
23:3	130-5960	2	Seal-Side
23:4	130-5962	2	Seal-Front, Rear
24	136-8674	22	Bolt-Pivot, Eccentric
25	130-5939	4	Tube-Support
27	130-5999	1	Drier-Receiver
29	3334-945	2	Tie-Cable
30	3274-69	2	Screw-HSBH
31	3256-1	2	Washer-Flat
33	119-4501	1	Switch-Function, Dual
34	46-6560	1	Bushing
35	104-5228	1	Fitting-Elbow, 90 DEG
36	130-0445	4	Backplate-Rivet
37	130-0444	1	Foam-Inlet, Airbox
38	2412-130	2	Clamp-Hose
39	132-3474	2	Insert-Seal, Filter
40	132-1461-03	2	Strap-Cab, Side
41	132-1462-03	2	Strap-Cab
42	3256-74	22	Washer-Flat

Headliner Wire Harness and Control Assembly For Cab Model Only

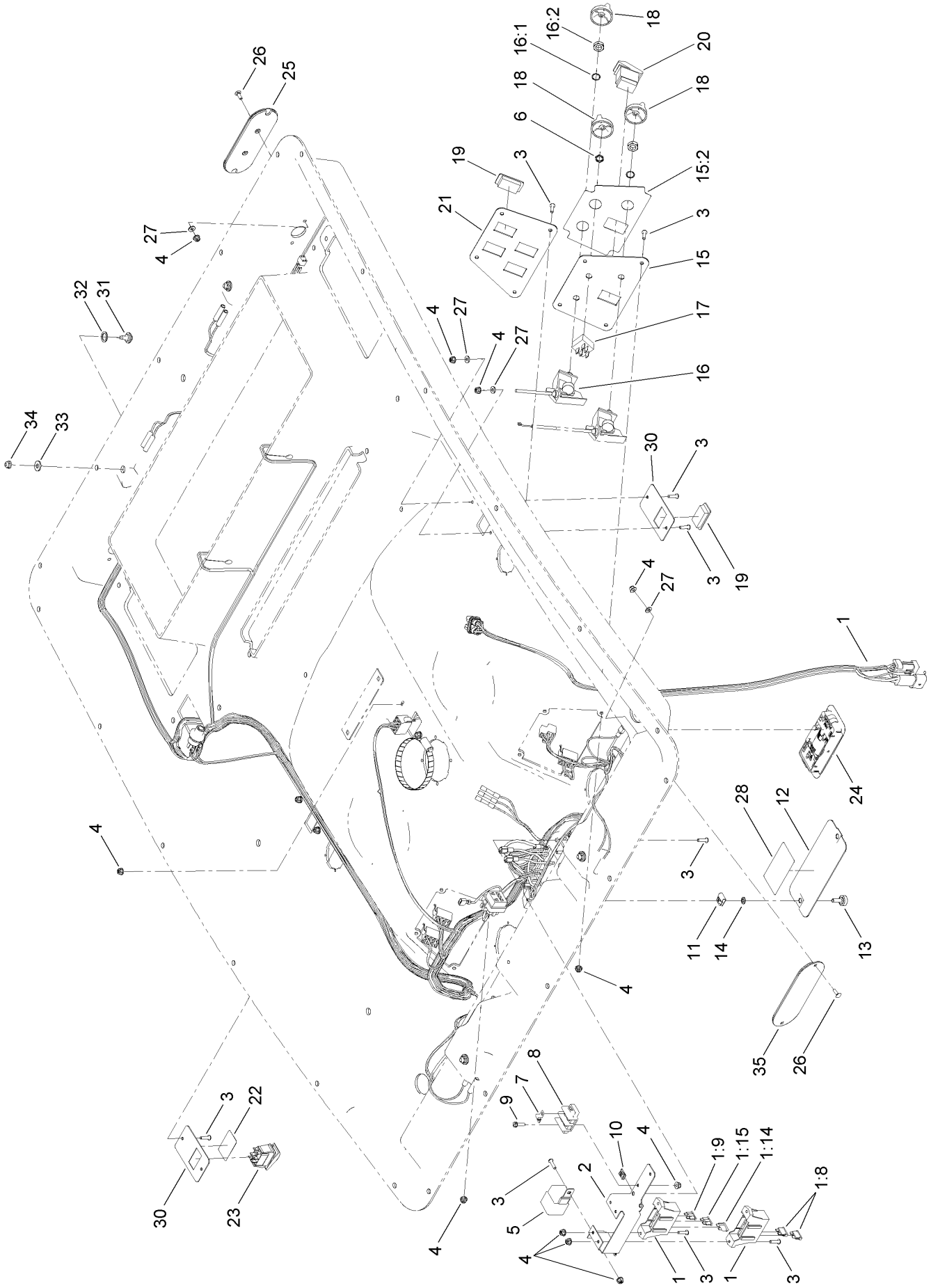

Headliner Wire Harness and Control Assembly For Cab Model Only (continued)

Ref.	Part Number	Qty.	Description
1	122-0723	1	Harness-Wire, Headliner
1:8	109355	2	Fuse-Blade, 15 Amp
1:9	109103	1	Fuse-Blade, 30 Amp
1:14	109101	1	Fuse-Blade, 20 Amp
1:15	109102	1	Fuse-Blade, 25 Amp
2	125-9606-03	1	Bracket-Fuse Block
3	104-2408	22	Screw-HSBH
4	120-4578	29	Nut-HF
5	99-7430	1	Relay-Mini
6	130-0588	1	Nut-Switch
7	42863	1	Strip-Jumper
8	42862	1	Block-Terminal, Ground
9	32105-13	3	Screw-HWH
10	107-1013	4	Nut-Speed
11	609900	2	Nut-Speed
12	125-9603-03	1	Plate-Cover, Fuse
13	125-7438	2	Knob-Screw, Thumb
14	106-8737	2	Nut-Retainer
15	121-8481	1	Panel-Air/Heat
15:2	121-8378	1	Decal, Air/Heat
16	125-9677	1	Control-Rotary, Linear
16:1	3254-20	1	Washer-Lock, Int
16:2	3220-4	1	Nut-Jam
17	122-0150	1	Switch, Rotary
18	125-9510	3	Knob-Control
19	99-7420	6	Plug-Hole
20	95-8999	1	Switch-Rocker, On-None-On
21	125-9691-03	1	Panel-Switch, Lights
22	125-9688	1	Decal-Washer
23	119-8355	1	Switch-Rocker
24	125-7437	1	Light-Dome
25	130-5867	2	Cover-Light, Rear
26	3229-34	8	Screw-CARR
27	3256-14	14	Washer-Flat
28	132-3600	1	Decal-Panel, Fuse
30	130-0436	3	Panel-Switch
31	92-9698	4	Screw-Shoulder
32	94-8196	4	Washer-Nylon
33	3256-2	4	Washer-Flat
34	104-7201	4	Nut-HF, NI
35	130-5868	2	Cover-Light, Front

Mixing Box Mounting Bracket and Water Tray Assembly For Cab Model Only

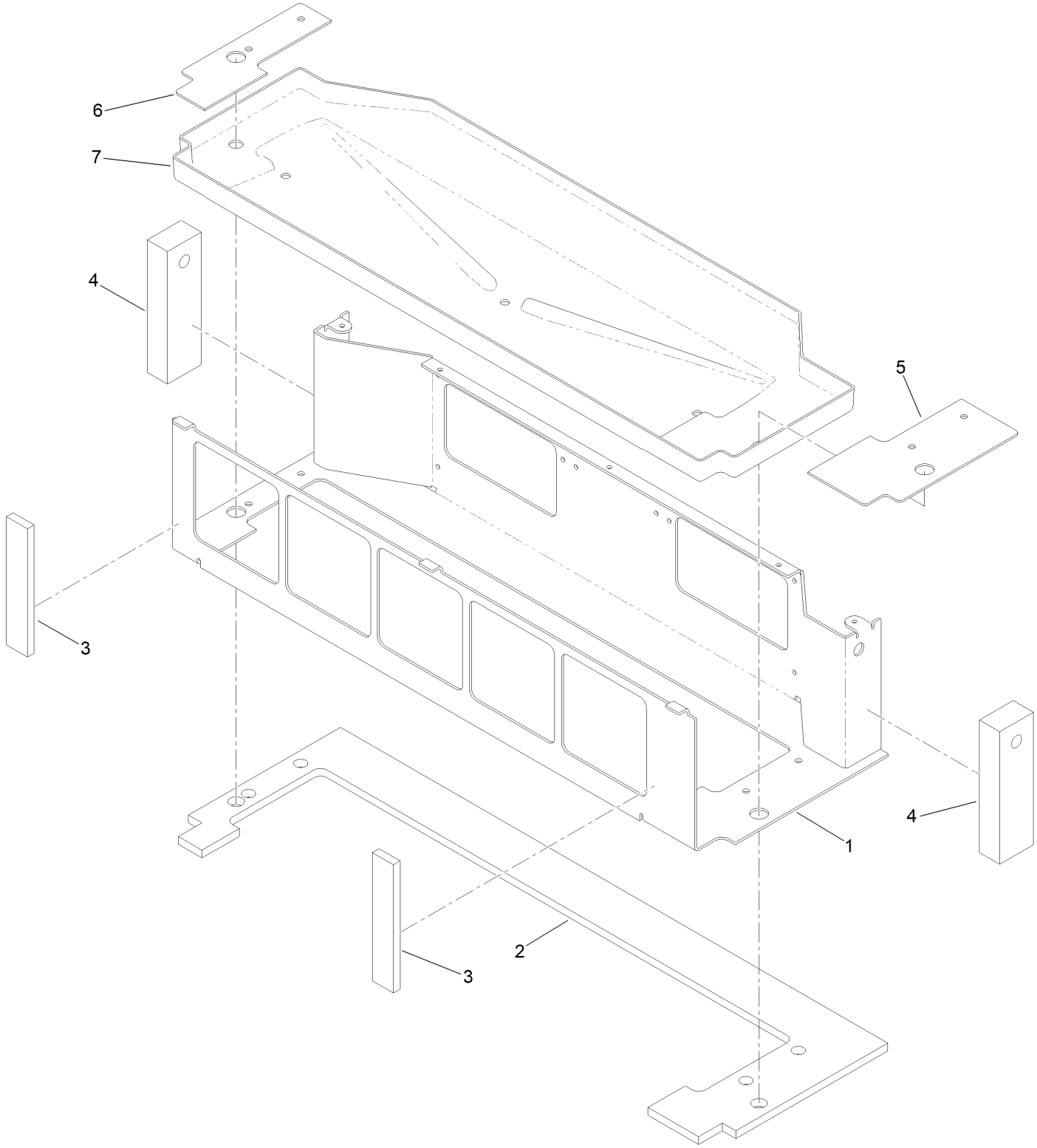

Mixing Box Mounting Bracket and Water Tray Assembly For Cab Model Only (continued)

Ref.	Part Number	Qty.	Description
1	130-5655-03	1	Bracket-Mount
2	130-5659	1	Seal-Foam
3	130-5808	2	Seal-Foam, Front
4	130-0602	2	Seal-End
5	130-5653	1	Gasket-Mount, LH Bracket
6	130-5654	1	Gasket-Mount, RH Bracket
7	130-5660	1	Tray-Water

Blower Fan and Evaporator Core Assembly
For Cab Model Only

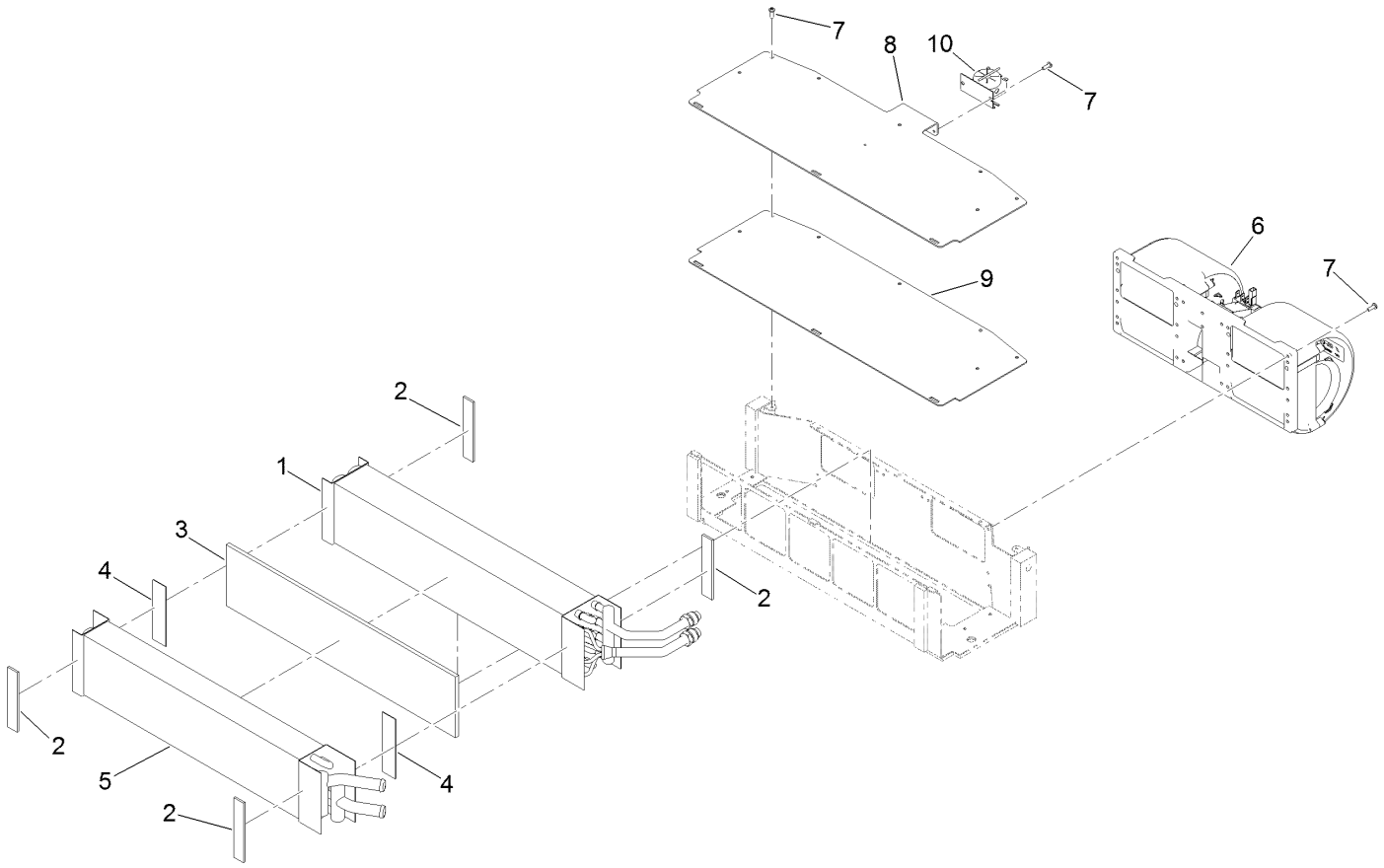

Blower Fan and Evaporator Core Assembly For Cab Model Only (continued)

Ref.	Part Number	Qty.	Description
1	130-5392	1	Core-Evaporator
2	130-5658	4	Gasket-Coil
3	130-5807	1	Foam
4	130-5806	2	Tape, Double-Sided
5	127-9915	1	Core-Heater
6	121-8451	1	Fan-Blower
7	363-8245	13	Screw-TAP
8	130-5656-03	1	Cover, Bracket-Mount
9	130-5652	1	Gasket-Mount, Cover Bracket
10	121-8385	1	Thermostat-Switch, Freeze

Heat / Air Conditioner Housing Assembly
For Cab Model Only

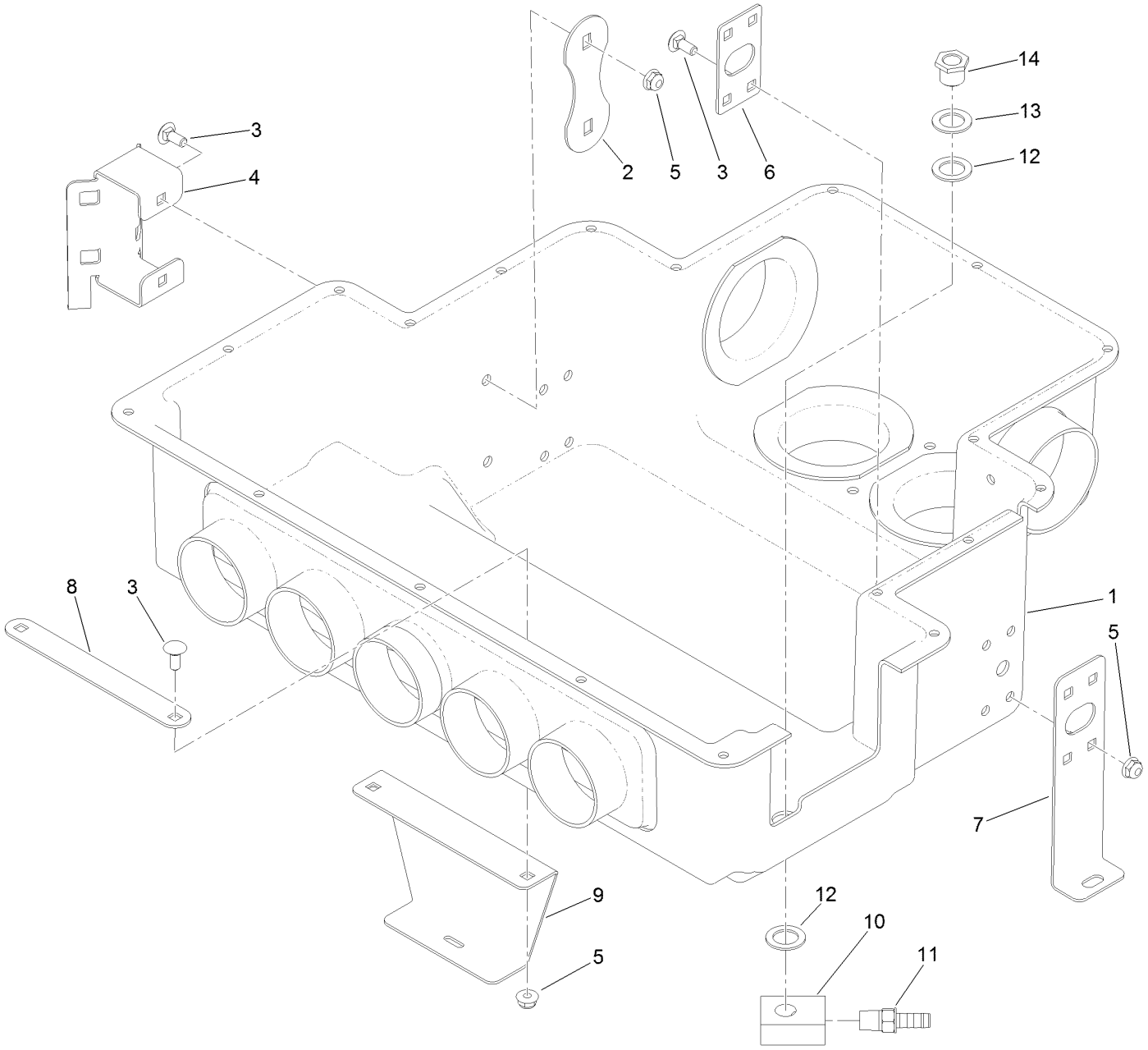

Heat / Air Conditioner Housing Assembly For Cab Model Only (continued)

Ref.	Part Number	Qty.	Description
1	130-5830	1	Housing-Heat/AC
2	121-8491	1	Plate-Support
3	3229-11	12	Screw-CARR
4	121-8490	1	Bracket-Mount, Drier
5	104-7201	12	Nut-HF, NI
6	130-5834	2	Bracket-Support
7	130-5821	2	Bracket-Airbox, Side
8	125-7504	1	Plate-Backer, Center
9	130-0554	1	Bracket-Airbox, Center
10	130-5601	2	Drain-Lower
11	108-0342	2	Fitting-Straight
12	121-6840	4	Washer-Rubber
13	107-3041	2	Washer-Flat
14	130-0293	2	Drain-Upper

Air Diverter and Expansion Valve Assembly For Cab Model Only

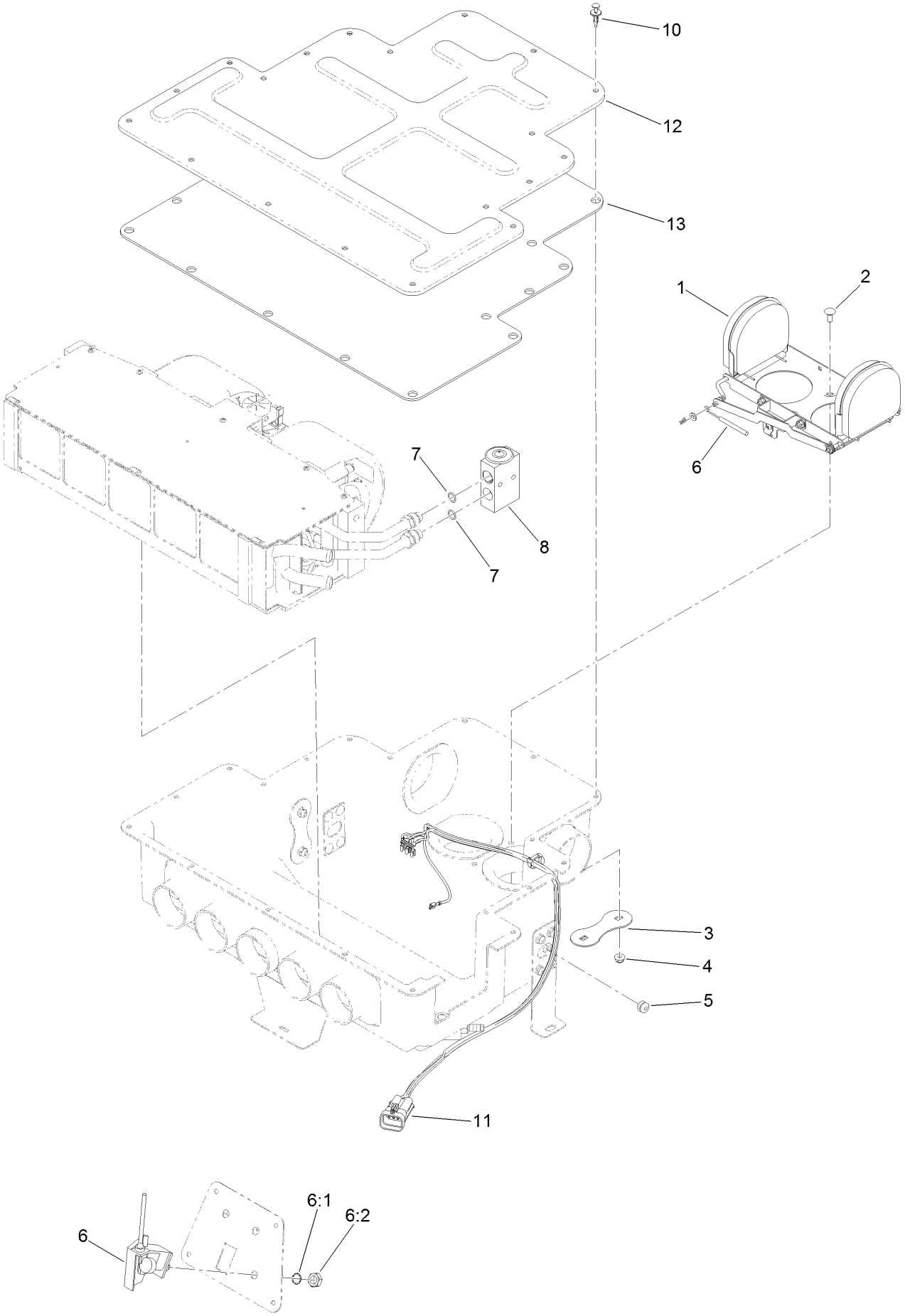

Air Diverter and Expansion Valve Assembly For Cab Model Only (continued)

Ref.	Part Number	Qty.	Description
1	121-8369	1	Air Diverter ASM
2	3229-11	2	Screw-CARR
3	121-8491	1	Plate-Support
4	104-7201	2	Nut-HF, NI
5	125-7528	1	Grommet-Cable
6	125-9678	1	Control-Rotary, Linear
6:1	3254-20	1	Washer-Lock, Int
6:2	3220-4	1	Nut-Jam
7	125-9524	2	O-Ring
8	121-8384	1	Valve-Expansion
10	125-9622	19	Rivet-Blind
11	122-0153	1	Harness-Wire, Heat/AC Blower
12	121-8449	1	Housing-Ventilation, Upper
13	130-5614	1	Insulation-Cover

Air Diverter Assembly No. 121-8369
For Cab Model Only

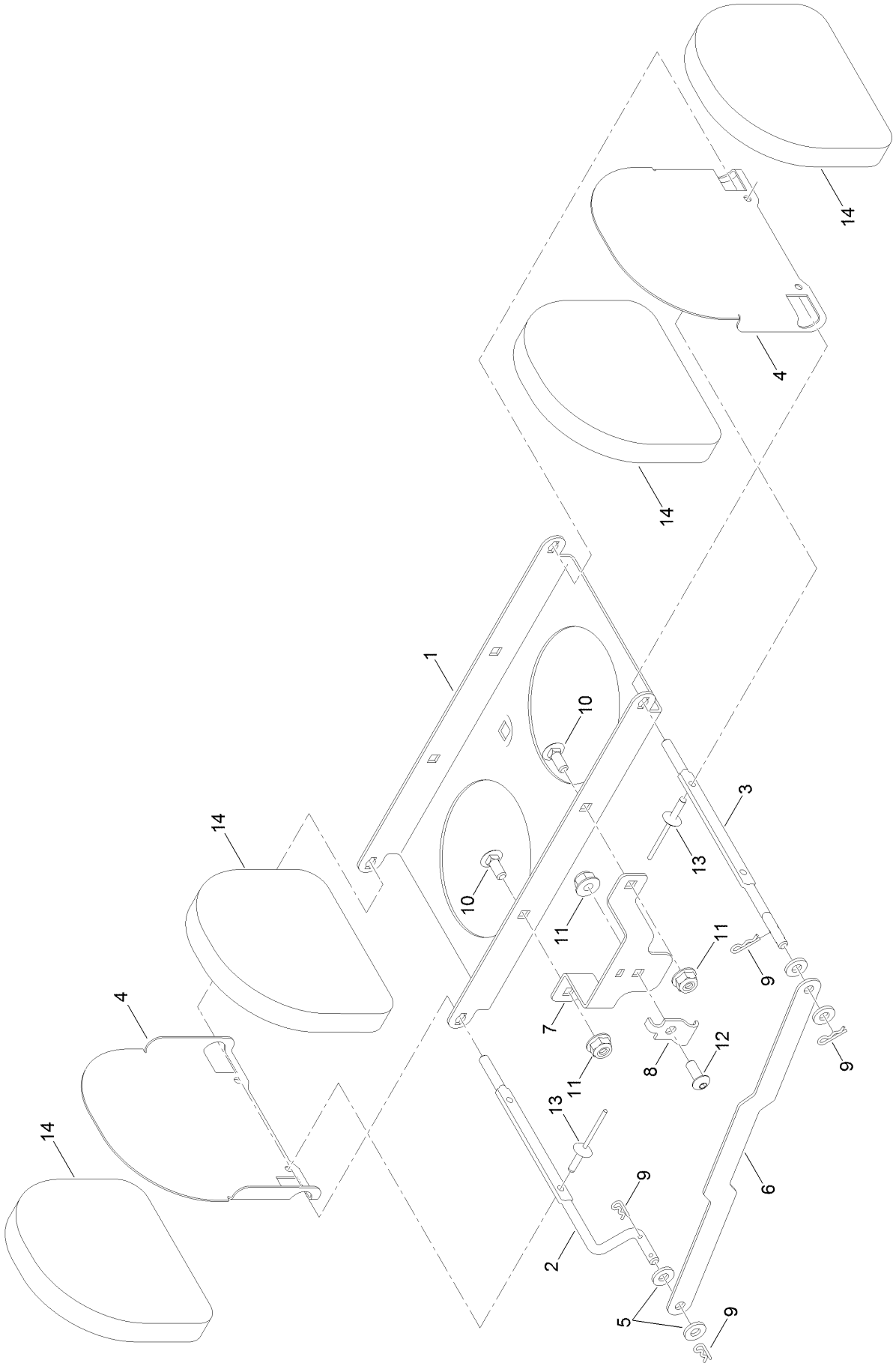

Air Diverter Assembly No. 121-8369
For Cab Model Only (continued)

Ref.	Part Number	Qty.	Description
1	125-9697	1	Base-Mount
2	121-8381	1	Shaft-Baffle, RH
3	121-8382	1	Shaft-Baffle, LH
4	125-9698	2	Baffle-Air
5	3256-51	4	Washer-Flat
6	125-9696	1	Link-Baffle
7	121-8374	1	Mount-Cable
8	121-8256	1	Clamp-Conduit
9	108-2992	4	Pin-Hair
10	1-807513	2	Bolt-CARR
11	120-4578	3	Nut-HF
12	115-9830	1	Screw-HSBH
13	3290-271	4	Rivet-Pop
14	125-9699	4	Damper-Foam

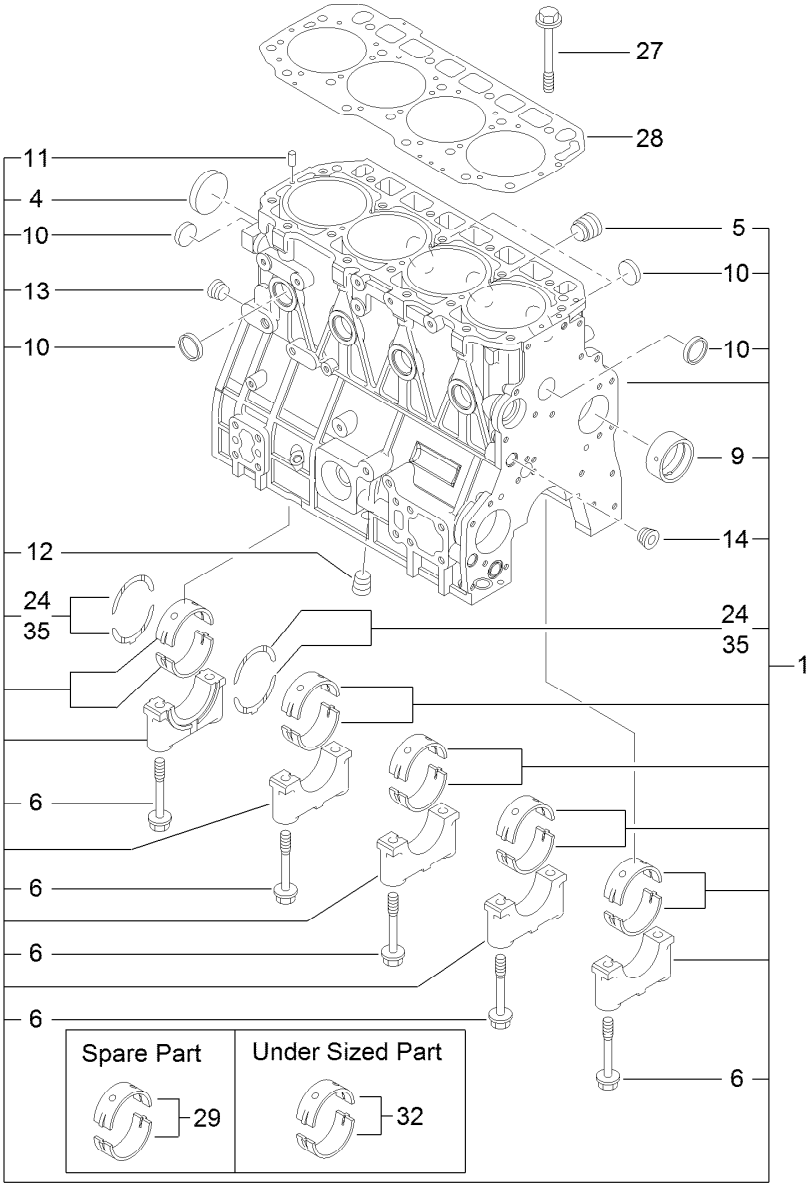

Cylinder Block Assembly

Ref.	Part Number	Qty.	Description
1	133-6785	1	Cylinder Block ASM
4	133-6627	1	Plug
5	125-7170	1	Plug
6	133-6628	10	Bolt
9	133-6630	1	Bushing-Camshaft
10	133-2507	8	Plug
11	125-7184	2	Pin-Spring
12	133-6798	1	Plug

Ref.	Part Number	Qty.	Description
13	133-6798	1	Plug
14	133-6798	1	Plug
24	133-6631	2	Bearing-Thrust
27	133-6626	18	Bolt-Head
28	133-6700	1	Gasket-Head, Cylinder
29	133-2508	5	Bearing-Main
32	133-6629	5	Bearing
35	133-6632	2	Bearing-Thrust

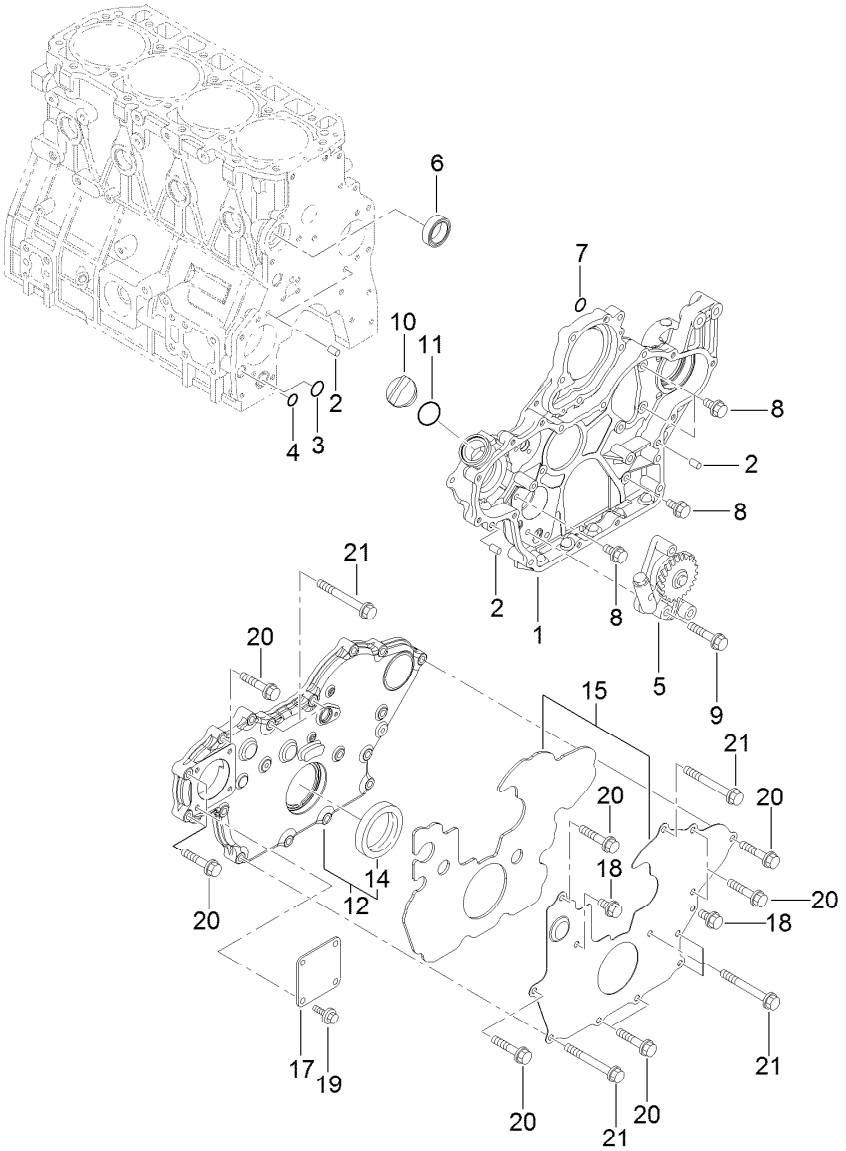

Gear Housing Assembly

Ref.	Part Number	Qty.	Description
1	133-6754	1	Case-Gear
2	125-6995	4	Pin
3	133-6653	1	O-Ring
4	133-6654	1	O-Ring
5	133-6664	1	Oil Pump ASM
6	133-6672	1	Gasket-CW P, Out
7	93-0400	1	O-Ring
8	125-7214	4	Bolt
9	125-7219	3	Bolt
10	125-6972	1	Cover-Filler

Ref.	Part Number	Qty.	Description
11	125-7197	1	O-Ring
12	133-6701	1	Gearcase Cover ASM
14	133-6669	1	Seal-Oil
15	133-6703	1	Gearcase Cover ASM
17	125-6977	1	Cover
18	125-7214	2	Bolt
19	125-7214	4	Bolt
20	125-7218	10	Bolt
21	133-2492	7	Bolt

Cylinder Head and Cover Assembly

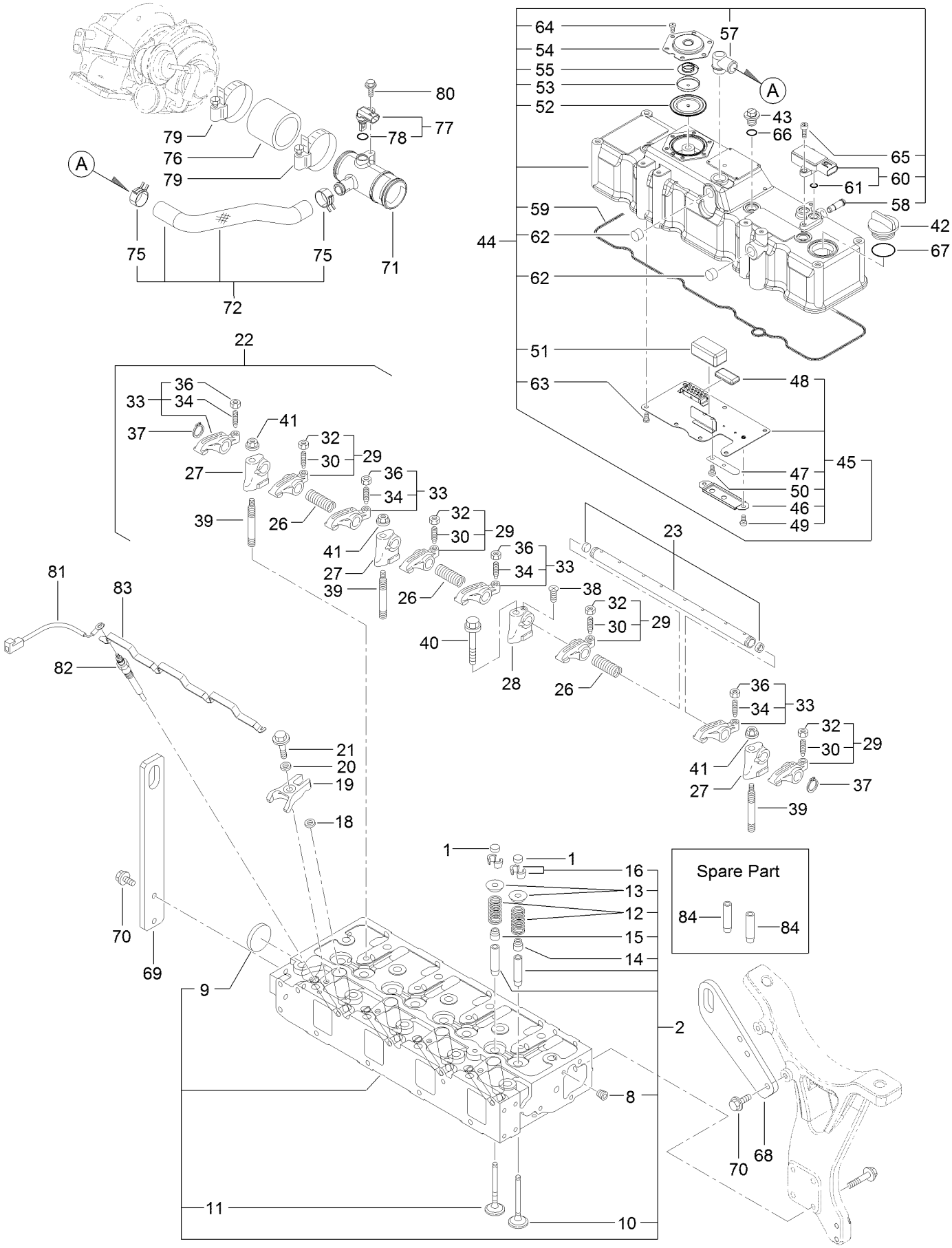

Cylinder Head and Cover Assembly (continued)

Ref.	Part Number	Qty.	Description
1	127-2996	8	Cap-Valve
2	133-6756	1	Cylinder Head ASM
8	133-6797	1	Plug
9	125-7240	1	Plug
10	133-6633	4	Valve-Intake
11	133-6634	4	Valve-Exhaust
12	133-6635	8	Spring-Valve
13	127-3013	8	Retainer-Spring
14	127-2986	4	Seal-Stem, Valve
15	127-3027	4	Seal-Stem, Valve
16	127-3186	8	Pin-Cotter
18	127-3021	4	Gasket-Injector
19	133-6707	4	Retainer-Injector
20	127-2980	4	Washer-Injector
21	125-7217	4	Bolt
22	133-6636	1	Arm Support ASM
23	133-6637	1	Rocker Shaft ASM
26	133-6638	3	Spring-Arm, Rocker
27	133-6639	3	Support-Arm, Rocker
28	133-6640	1	Support-Arm, Rocker
29	133-6642	4	Arm-Rocker
30	125-7013	4	Screw-Adjust, Valve
32	125-7014	4	Nut
33	133-6643	4	Arm-Rocker
34	125-7013	4	Screw-Adjust, Valve
36	125-7014	4	Nut
37	133-6794	2	Ring
38	133-2503	1	Screw
39	133-6641	3	Stud
40	133-2498	1	Bolt
41	125-7230	3	Nut
42	125-6972	1	Cover-Filler
43	125-6974	3	Knob
44	133-6755	1	Cylinder Head Cover ASM
45	133-6704	1	Plate-Baffle
46	133-6705	1	Cover-Plate, Spring
47	133-6696	1	Spring-Plate
48	133-6661	1	Baffle-Breather
49	133-2502	2	Screw
50	133-2505	1	Screw
51	125-7118	1	Baffle-Breather
52	125-6959	1	Diaphragm
53	125-6960	1	Plate
54	125-6961	1	Plate-Breather
55	125-6962	1	Spring-Diaphragm
57	133-6603	1	Elbow
58	127-3026	1	Joint
59	132-4907	1	Gasket-Cover, Head
60	127-3029	1	Sensor-Pressure
61	127-3032	2	O Ring-Sensor, Pressure
62	125-6913	2	Plug
63	125-7186	7	Screw
64	125-7186	6	Screw
65	127-3184	2	Bolt
66	93-0418	3	O-Ring
67	125-7197	1	O-Ring
68	133-6779	1	Lifter-Engine
69	133-6695	1	Lifter
70	125-7595	4	Bolt
71	127-3128	1	Joint-Breather
72	133-6787	1	Breather Hose ASM
75	125-7040	2	Clip-Hose
76	127-3133	1	Hose-Intake
77	127-3030	1	Sensor-Temp, Air
78	127-3033	1	O-Ring
79	125-7190	2	Clamp-Hose
80	125-7207	1	Bolt
81	131-2704	1	Harness-Wire
82	127-2991	4	Plug-Glow
83	133-6750	1	Connector-Plug, Glow
84	127-2997	8	Guide-Valve

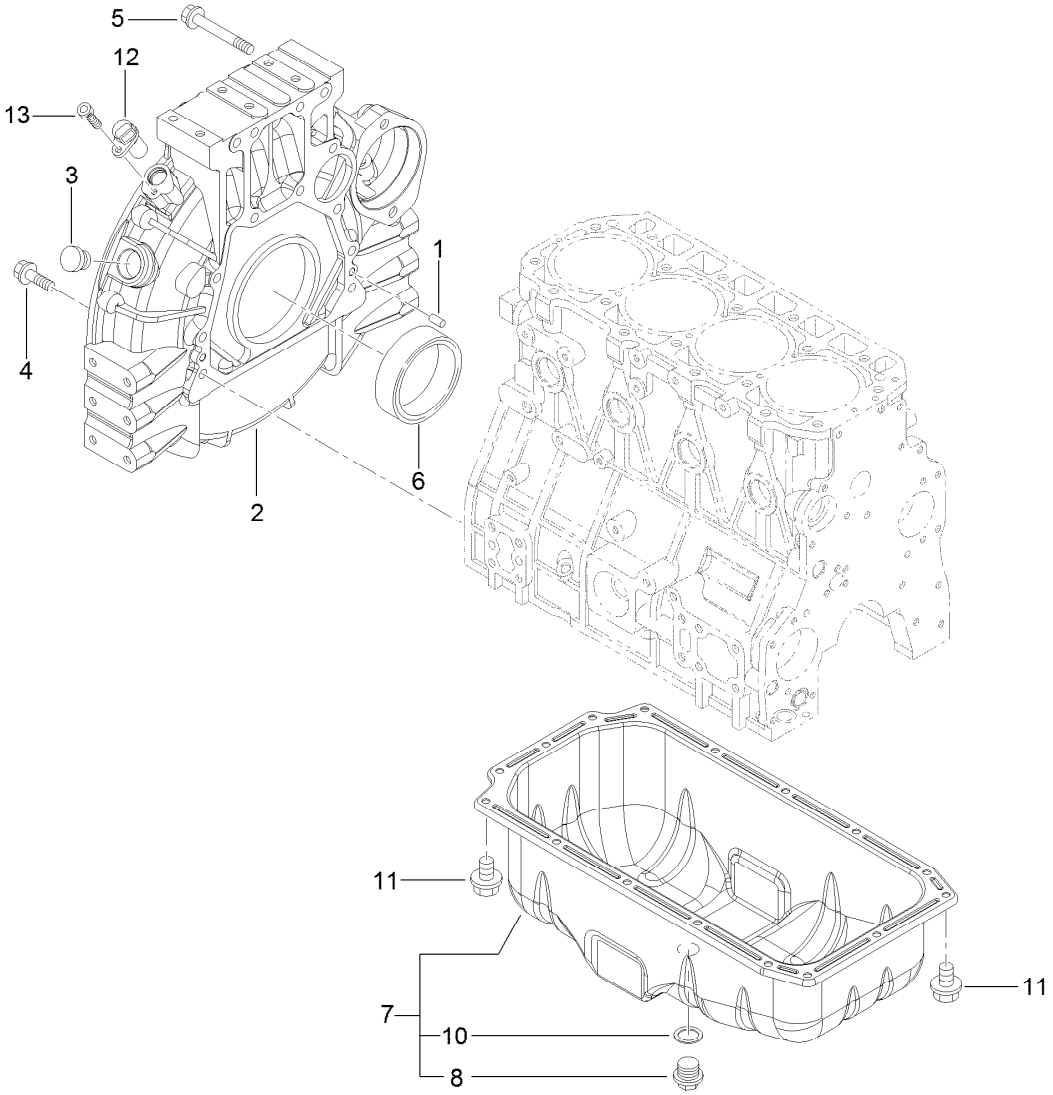

Flywheel Housing and Oil Sump Assembly

Ref.	*Part Number*	*Qty.*	*Description*
1	125-6995	2	Pin
2	133-6702	1	Housing-Flywheel
3	125-6910	1	Cap
4	133-2499	9	Bolt
5	133-2500	4	Bolt
6	133-6668	1	Seal
7	133-6691	1	Oil Sump ASM
8	125-6912	1	Plug-Drain
10	125-7177	1	Washer-Seal
11	125-7212	16	Bolt
12	127-3062	1	Sensor-Rev, Flywheel
13	127-3184	1	Bolt

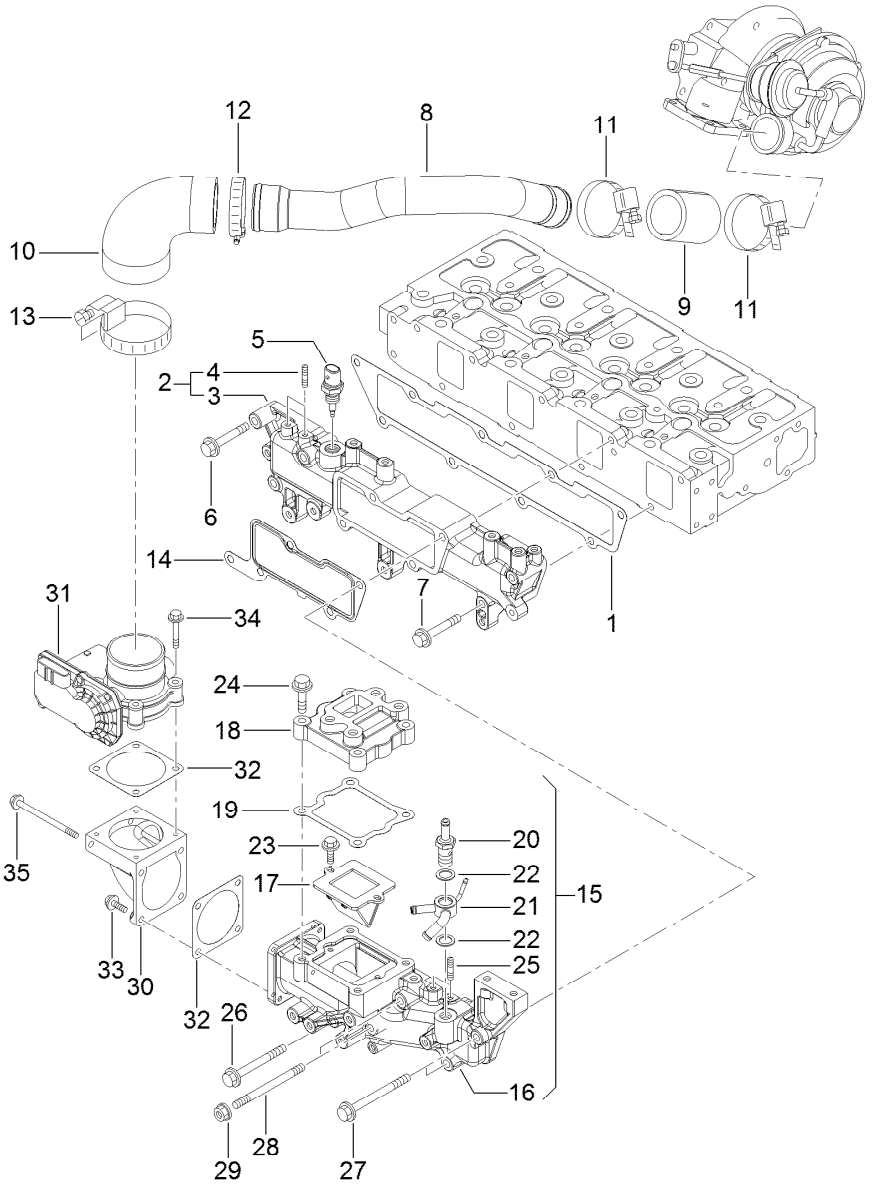

Suction Manifold Assembly

Ref.	Part Number	Qty.	Description
1	133-6708	1	Gasket-Manifold
2	133-6758	1	Intake Manifold ASM
3	133-6757	1	Manifold-Intake, Air
4	127-3180	2	Stud
5	127-3031	1	Sensor-Temp, Air
6	125-7219	1	Bolt
7	125-7221	4	Bolt
8	133-6764	1	Duct-Intake
9	127-3096	1	Joint-Rubber
10	133-6765	1	Joint-Hose
11	127-3170	2	Clamp-Hose
12	125-7190	1	Clamp-Hose
13	127-3171	1	Clamp-Hose
14	133-6709	1	Gasket-Collector
15	133-6760	1	Collector ASM
16	133-6759	1	Collector
17	133-6762	1	Valve-Reed
18	133-6716	1	Spacer-Valve, E G R

Ref.	Part Number	Qty.	Description
19	133-6717	1	Gasket-V Spacer, E G R
20	127-3080	1	Joint-Hose
21	133-6743	1	Joint-Hose
22	127-3166	2	Washer-Seal
23	125-7207	2	Bolt
24	125-7217	4	Bolt
25	127-3180	2	Stud
26	127-3178	1	Bolt
27	133-2493	2	Bolt
28	133-2501	2	Stud
29	125-7229	2	Nut
30	127-3035	1	Bend-Inlet
31	127-3036	1	Body-Throttle
32	127-3037	2	Gasket-Throttle
33	125-7209	2	Bolt
34	125-7211	4	Bolt
35	127-3177	2	Bolt

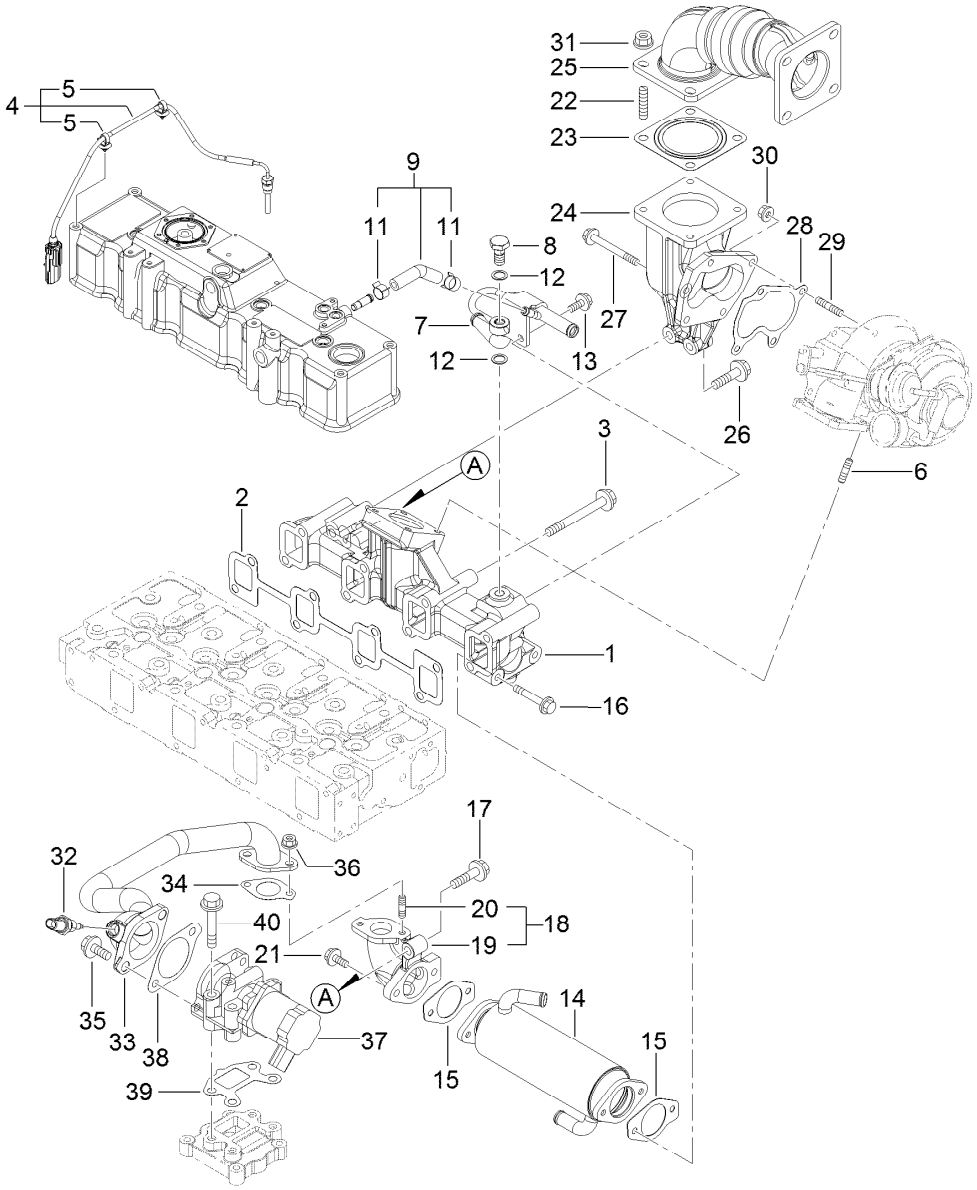

Exhaust Manifold Assembly

Ref.	Part Number	Qty.	Description
1	133-6761	1	Manifold-Exhaust
2	133-6710	1	Gasket-Manifold
3	133-6791	8	Bolt
4	133-6718	1	Sensor-Temp, Exhaust
5	127-3087	2	Band-Clip
6	125-7043	4	Stud
7	133-6711	1	Pipe-Pressure, Exhaust
8	127-3039	1	Bolt-Joint, Pipe
9	133-6712	1	Exhaust Pressure Hose ASM
11	127-3041	2	Clip-Hose
12	127-3174	2	Gasket
13	125-7214	2	Bolt
14	133-6713	1	Cooler-E G R
15	133-6698	2	Gasket-Cooler, E G R
16	133-6714	2	Bolt
17	133-6792	1	Bolt
18	133-6720	1	E G R-C Out Bend ASM
19	133-6721	1	Bend-Out, E G R-C
20	125-7043	2	Stud

Ref.	Part Number	Qty.	Description
21	125-7595	2	Bolt
22	127-2984	4	Stud
23	127-2987	1	Gasket-Silencer
24	133-6697	1	Pipe-Exhaust
25	133-6788	1	Pipe-Exhaust
26	133-6792	2	Bolt
27	133-6606	1	Bolt
28	133-6619	1	Gasket
29	125-6906	3	Stud
30	125-7229	3	Nut
31	125-7230	4	Nut
32	127-3047	1	Sensor-Gas Temp, E G R
33	133-6719	1	E G R Pipe ASM
34	127-3016	1	Gasket
35	133-2496	2	Bolt
36	125-7229	2	Nut
37	133-6722	1	Valve-E G R
38	133-6723	1	Gasket-In, E G R-V
39	133-6724	1	Gasket-Out, E G R-V
40	93-0479	4	Bolt

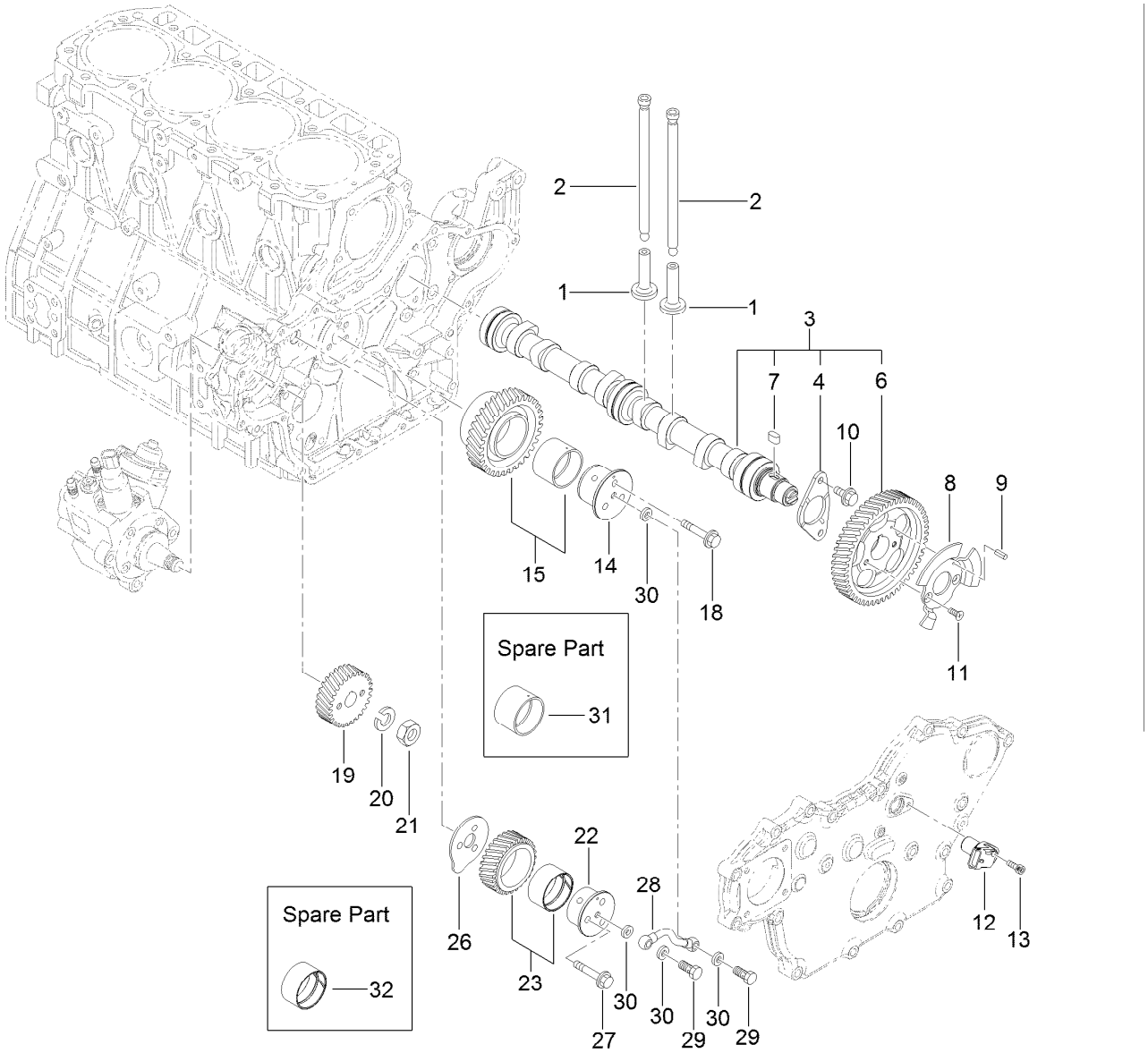

Camshaft and Driving Gear Assembly

Ref.	Part Number	Qty.	Description
1	125-7016	8	Tappet
2	133-6644	8	Rod-Push
3	133-6726	1	Cam Shaft ASM
4	125-7008	1	Metal-Thrust
6	133-6725	1	Gear-Camshaft
7	125-7185	1	Key
8	133-6727	1	Pulser-Gear, Cam
9	125-7182	1	Pin-Spring
10	125-7213	2	Bolt
11	133-2504	2	Screw
12	127-3054	1	Sensor-Rev, Gear
13	127-3184	1	Bolt
14	133-6731	1	Shaft-Gear A, Idle
15	133-6652	1	Idle Gear ASM

Ref.	Part Number	Qty.	Description
18	125-7220	3	Bolt
19	133-6737	1	Gear-Pump, Supply
20	127-3167	1	Washer-Spring
21	127-3185	1	Nut-Lock
22	133-6732	1	Shaft-Gear B, Idle
23	133-6734	1	Idle Gear B ASM
26	133-6735	1	Plate-Shaft B, Idle
27	125-7219	3	Bolt
28	133-6736	1	L O Pipe ASM
29	133-6600	2	Bolt-Joint, Pipe
30	125-7174	4	Washer-Seal
31	133-6624	1	Bushing-Gear, Idle
32	133-6733	1	Bushing

Diesel Particulate Filter Assembly

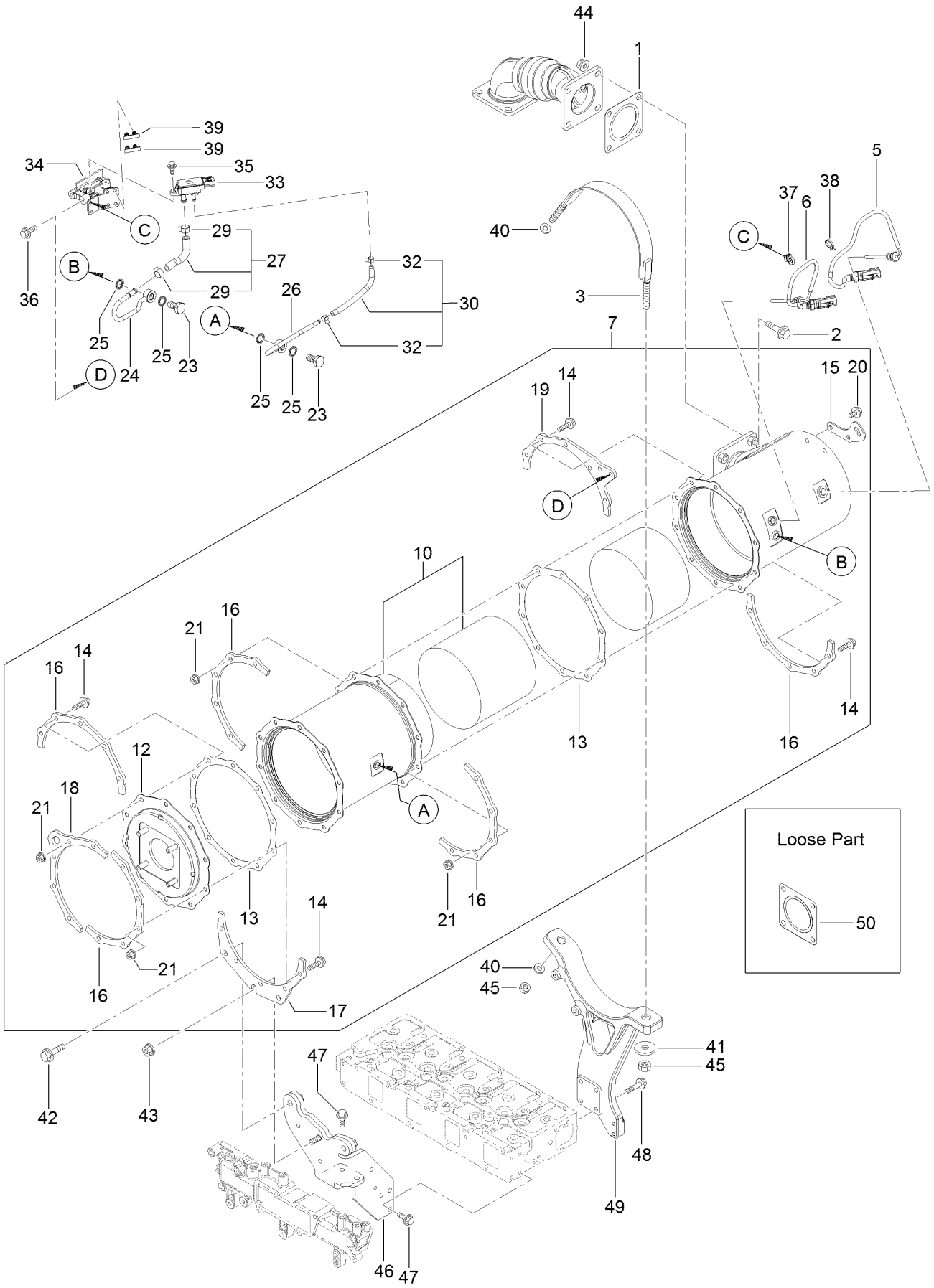

Diesel Particulate Filter Assembly (continued)

Ref.	Part Number	Qty.	Description
1	127-2987	1	Gasket-Silencer
2	133-6793	4	Bolt
3	133-6783	1	Band-D P F
5	127-4764	1	Sensor-Temp, Exhaust
6	127-4765	1	Sensor-Temp, Exhaust
7	133-6786	1	D P F ASM
10	130-8348R	1	Case-Soot Filter, Recon
10	130-8348	1	Case-Soot Filter
12	133-6781	1	Flange-Outlet
13	127-3162	2	Gasket-D P F
14	127-3055	20	Bolt
15	127-3144	1	Lifter-D P F
16	127-3145	5	Stiffener-D P F, A
17	133-6728	1	Stiffener-D P F, B
18	127-3147	1	Stiffener-D P F, C
19	133-6699	1	Stiffener-D P F, C
20	125-7213	2	Bolt
21	125-7229	20	Nut
23	127-3039	2	Bolt-Joint, Pipe
24	133-6775	1	Exhaust Pressure Pipe ASM
25	127-3056	4	Gasket-Sensor
26	133-6776	1	Exhaust Pressure Pipe ASM
27	133-6777	1	Exhaust Pressure Hose ASM
29	127-3057	2	Clip-Hose
30	127-3059	1	Exhaust Pressure Hose ASM
32	127-3058	2	Clip-Hose
33	127-3060	1	Sensor-Pressure
34	133-6773	1	Bracket-Sensor
35	125-7208	2	Bolt
36	125-7215	2	Bolt
37	127-3087	1	Band-Clip
38	127-3124	1	Band
39	127-3088	2	Clip-Connnector
40	93-0417	2	Washer
41	93-0417	1	Washer
42	133-2497	2	Bolt
43	125-7230	1	Nut
44	125-7230	4	Nut
45	133-2506	2	Nut
46	133-6774	1	Stay-D P F
47	125-7595	5	Bolt
48	133-6715	4	Bolt
49	133-6782	1	Stay-D P F
50	127-2987	1	Gasket-Silencer

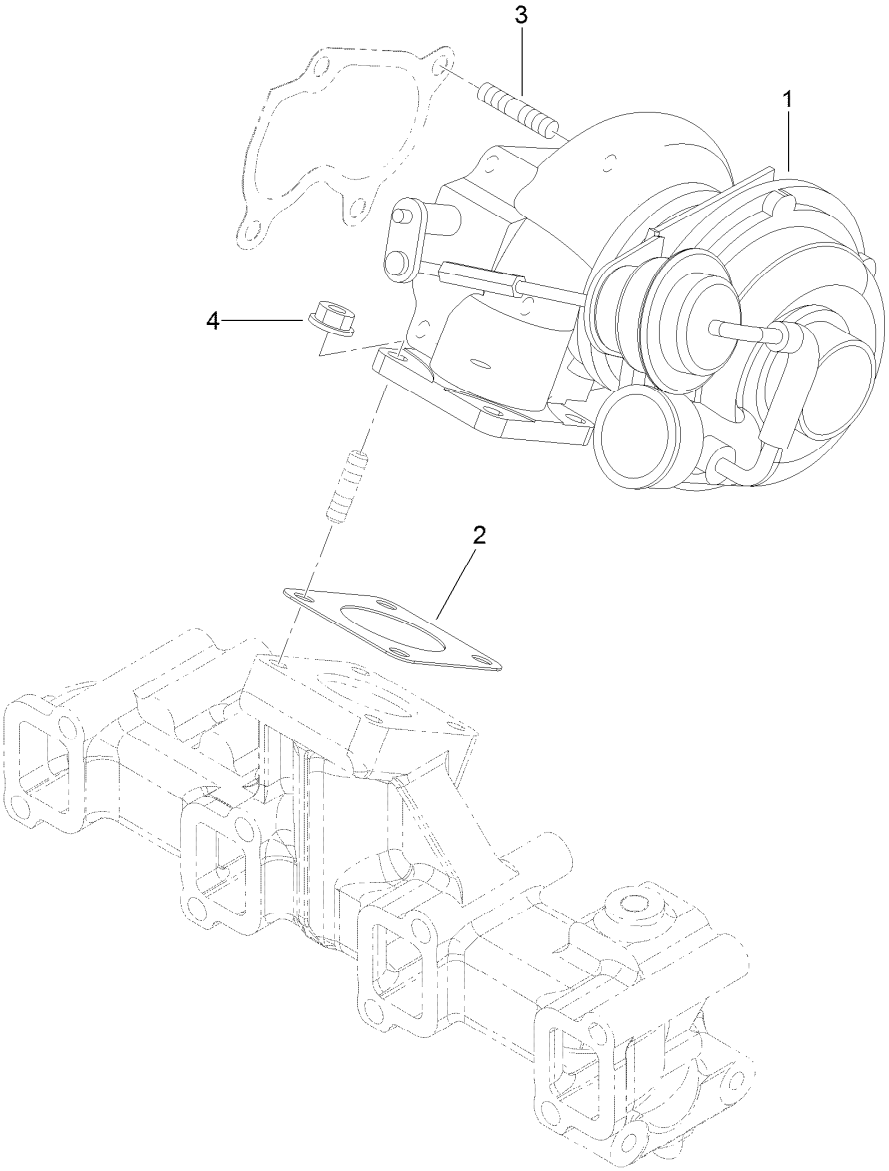

Turbine Assembly

Ref.	Part Number	Qty.	Description
1	133-6763	1	Turbocharger-R H F5
2	133-6625	1	Gasket
3	125-6906	4	Stud
4	125-7229	4	Nut

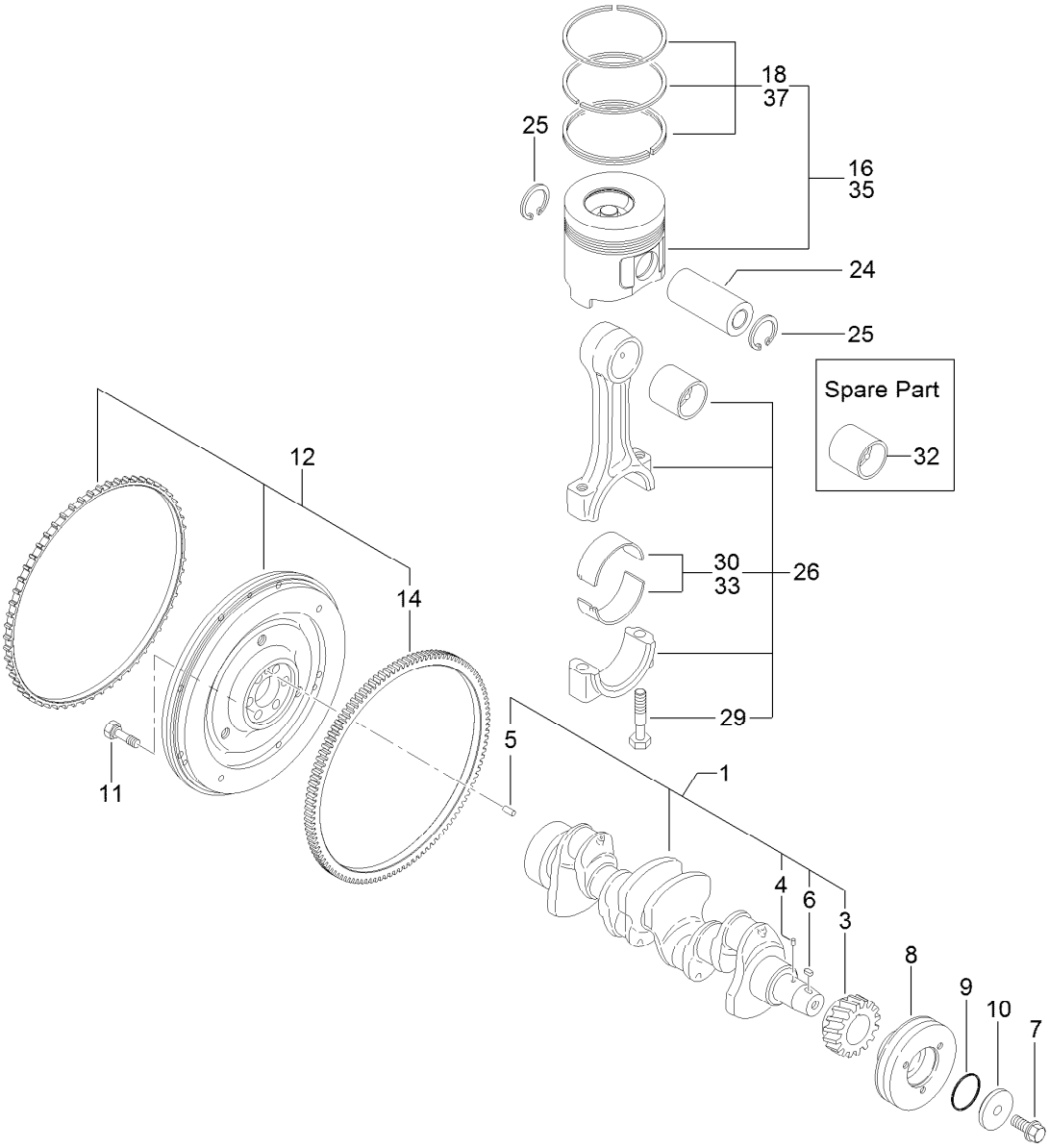

Crankshaft and Piston Assembly

Ref.	Part Number	Qty.	Description
1	133-6663	1	Crankshaft ASM
3	133-6645	1	Gear-Crankshaft
4	133-6611	1	Pin
5	133-6612	1	Pin-Parallel
6	125-7185	1	Key
7	133-6670	1	Bolt
8	133-6662	1	Pulley-V
9	133-6693	1	Packing-Washer
10	133-6694	1	Washer-Pulley, V
11	133-6610	6	Bolt-Flywheel
12	133-6778	1	Flywheel ASM
14	133-6646	1	Gear-Ring

Ref.	Part Number	Qty.	Description
16	133-6766	4	Piston ASM
18	133-6729	4	Ring ASM
24	133-6607	4	Pin-Piston
25	133-6795	8	Ring
26	133-6647	4	Connecting Rod ASM
29	133-6648	8	Bolt-Rod, Connecting
30	133-6649	4	Bearing-Pin, Crank
32	133-6651	4	Bearing-Pin, Piston
33	133-6650	4	Bearing
35	133-6767	4	Piston ASM
37	133-6730	4	Ring ASM

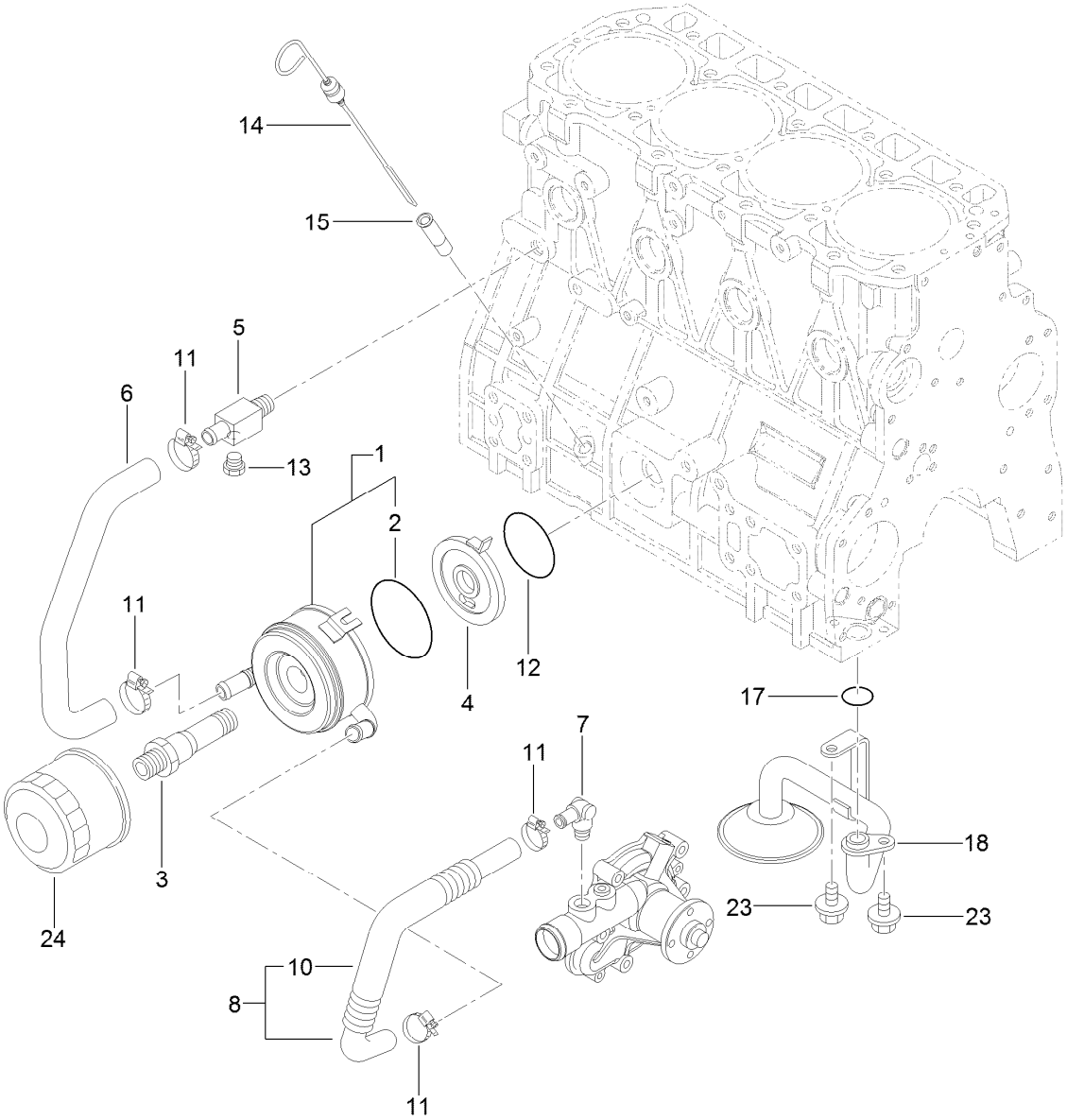

Lubrication and Oil System Assembly

Ref.	Part Number	Qty.	Description
1	127-3014	1	Cooler ASM
2	127-2985	1	O-Ring
3	133-6622	1	Bolt-Cooler
4	127-3015	1	Bracket-Cooler
5	125-6990	1	Joint
6	133-6667	1	Pipe-Water
7	127-3003	1	Elbow
8	133-6620	1	Pipe-Water
10	133-6621	1	Tube-Corrugated

Ref.	Part Number	Qty.	Description
11	125-7188	4	Clamp-Hose
12	127-3176	1	O-Ring
13	125-7171	1	Plug-Drain
14	133-6655	1	Dipstick-Oil
15	125-6954	1	Guide-Dipstick
17	133-6653	1	O-Ring
18	133-6656	1	Oil Inlet Pipe ASM
23	125-7212	2	Bolt
24	125-7025	1	Filter-Engine, Oil

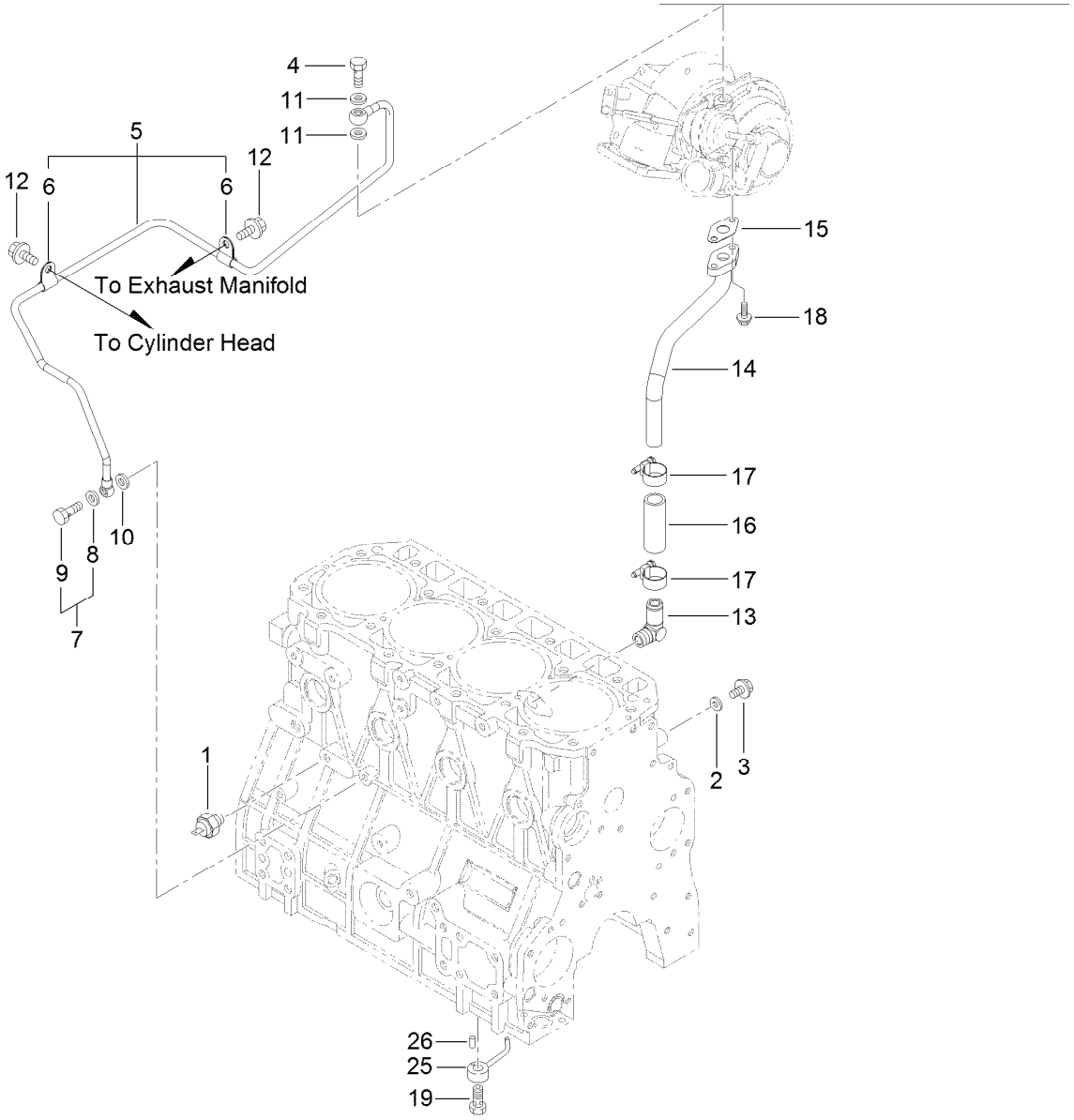

Lubrication Oil Pipe Assembly

Ref.	Part Number	Qty.	Description
1	125-6918	1	Switch-Oil
2	125-7174	1	Washer-Seal
3	125-7212	1	Bolt
4	125-6952	1	Bolt-Joint, Pipe
5	133-6768	1	L O Pipe ASM
6	133-6623	2	Retainer
7	125-6988	1	Joint Bolt ASM
8	125-7174	1	Washer-Seal
9	125-7194	1	Bolt-Joint
10	125-7174	2	Washer-Seal
11	125-7193	2	Gasket

Ref.	Part Number	Qty.	Description
12	125-7212	2	Bolt
13	125-6971	1	Elbow
14	133-6769	1	Pipe-L O Return T/C
15	133-6666	1	Gasket
16	125-6958	1	Hose
17	125-7188	2	Clamp-Hose
18	125-7208	2	Bolt
19	133-6665	4	Check Valve ASM
25	133-6602	4	Nozzle
26	125-7182	4	Pin-Spring

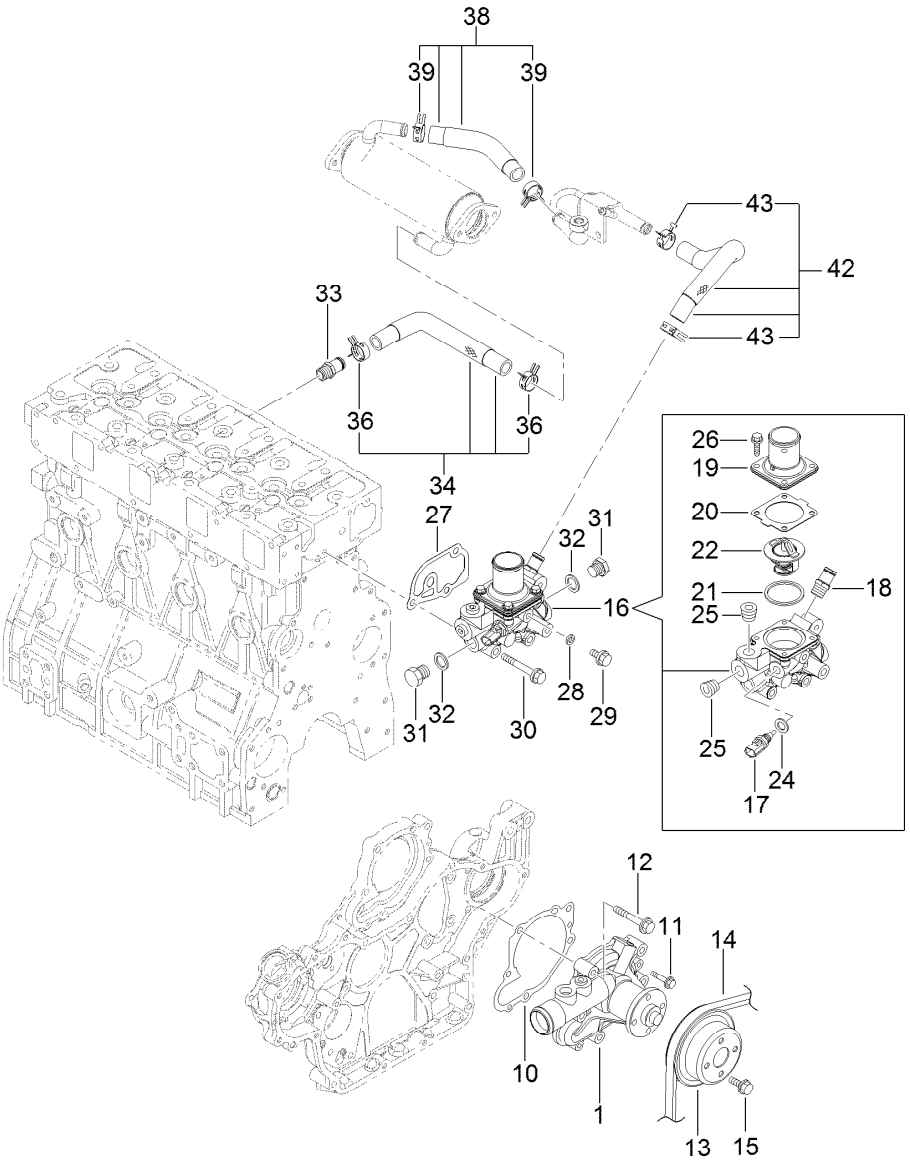

Cooling Water System Assembly

Ref.	Part Number	Qty.	Description
1	133-6657	1	Water Pump ASM
10	133-6658	1	Gasket-Pump, Water
11	131-2739	2	Bolt
12	125-7221	5	Bolt
13	133-6659	1	V Pulley-Pump, CW
14	133-6799	1	V-Belt
15	133-2495	4	Bolt
16	133-6740	1	Thermostat Case ASM
17	125-7124	1	Sensor-Thermostat, CW
18	127-3017	1	Joint
19	133-6671	1	Cover-Thermostat
20	133-6613	1	Gasket-Thermostat
21	133-6614	1	Gasket-Thermostat
22	133-6615	1	Thermostat
24	125-7176	1	Washer-Seal

Ref.	Part Number	Qty.	Description
25	133-6796	2	Plug
26	125-7209	4	Bolt
27	133-6660	1	Gasket
28	125-7192	1	Gasket
29	125-7212	1	Bolt
30	125-7222	3	Bolt
31	125-6953	2	Plug
32	125-6979	2	Gasket
33	127-3017	1	Joint
34	133-6738	1	E G R-C In Hose ASM
36	127-3020	2	Clip-Hose
38	133-6739	1	E G R-C Out A Hose ASM
39	127-3020	2	Clip-Hose
42	133-6784	1	E G R-C Out B Hose ASM
43	127-3020	2	Clip-Hose

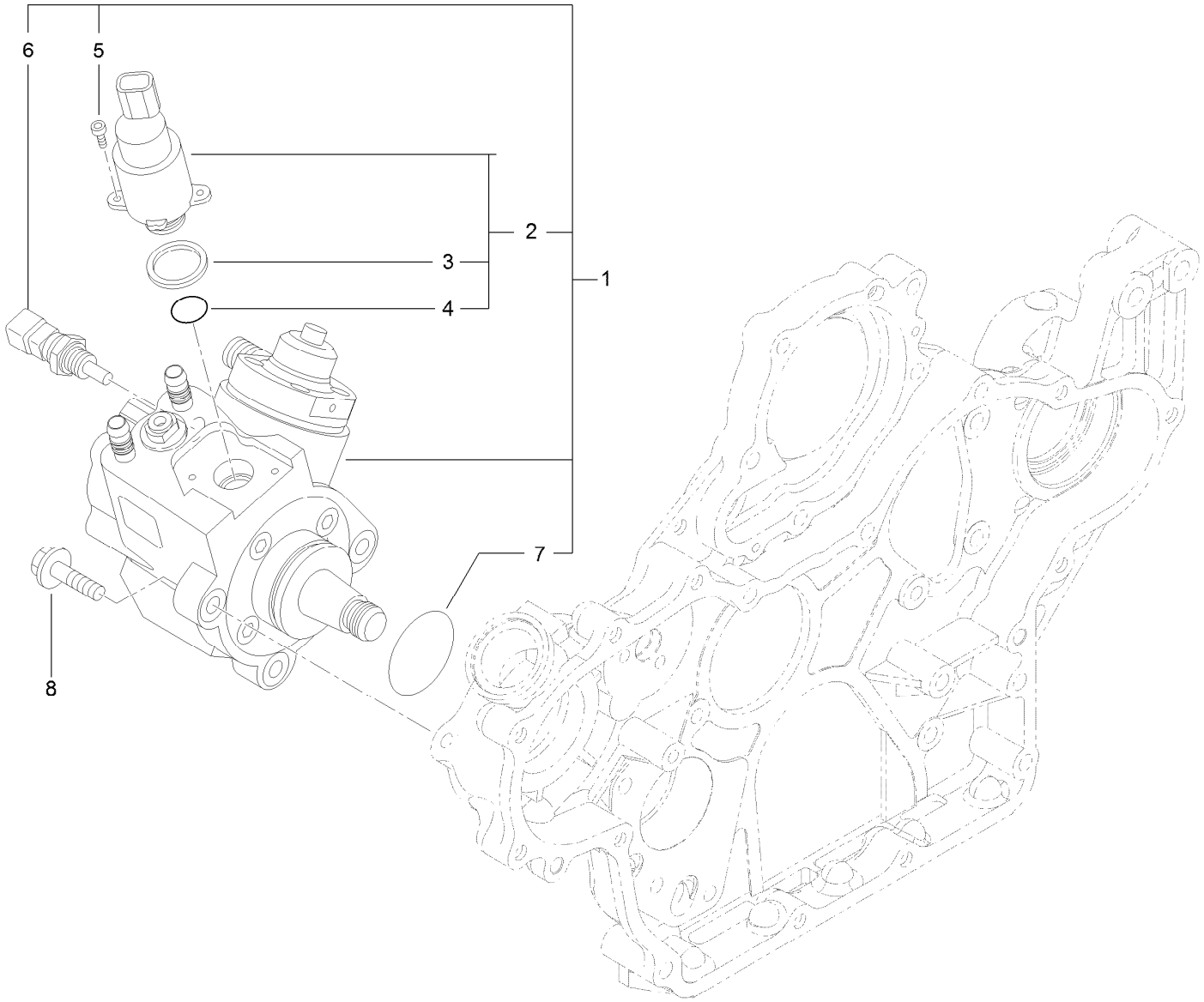

Fuel Supply Pump Assembly

Ref.	*Part Number*	*Qty.*	*Description*
1	127-3073	1	Fuel Pump ASM
2	131-2103	1	Valve ASM
3	131-2105	1	Ring-Sealing
4	131-2106	1	O-Ring
5	131-2107	2	Bolt
6	131-2108	1	Sensor-Temperature
7	127-3074	1	O-Ring
8	125-7216	3	Bolt

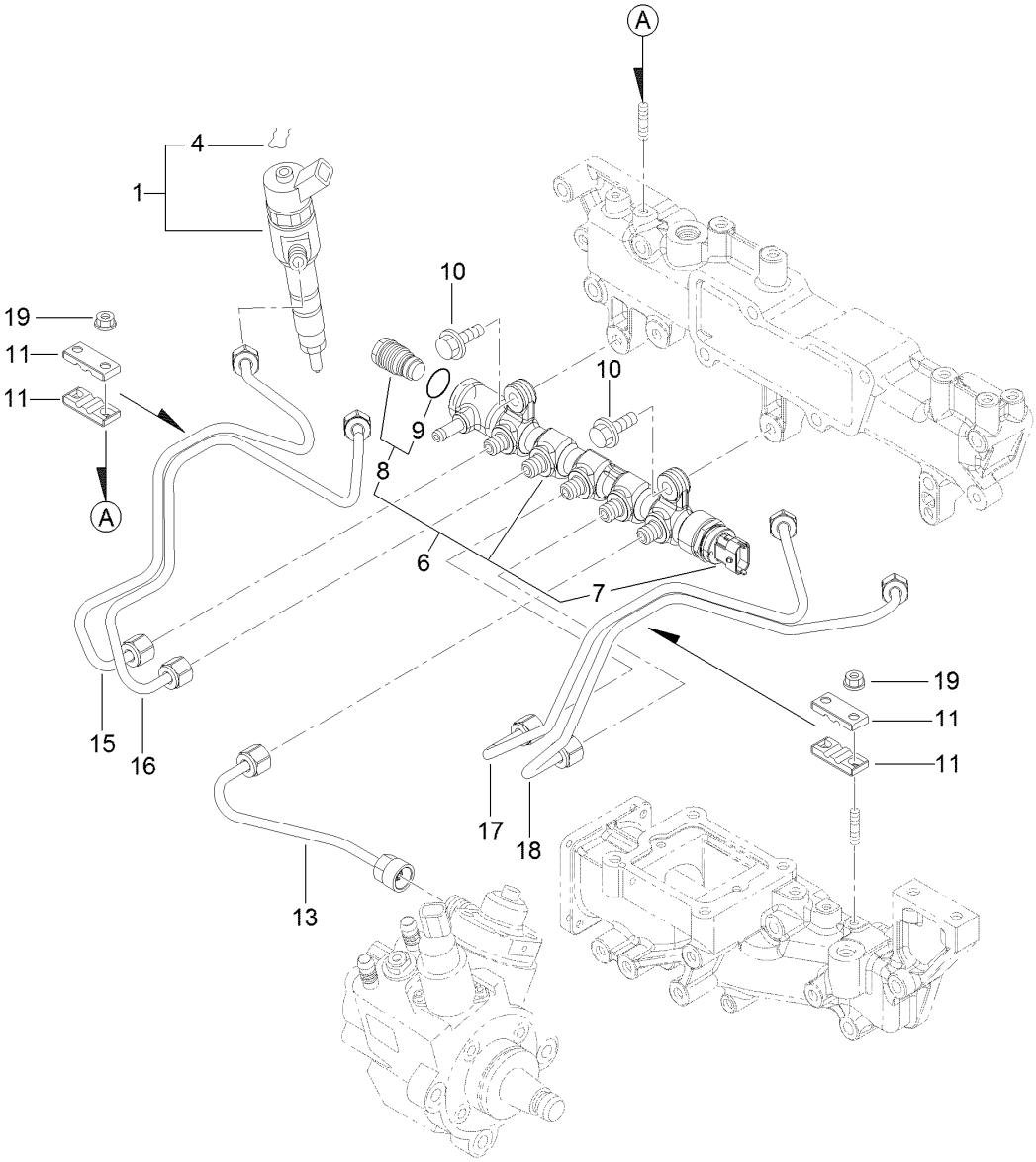

Fuel Injection Valve Assembly

Ref.	Part Number	Qty.	Description
1	133-6770	4	Injector-C R
4	130-7430	4	Ring-Retaining
6	127-3118	1	Rail ASM
7	130-7431	1	Sensor-Pressure, Rail
8	130-7432	1	Valve ASM
9	130-7433	1	O-Ring
10	125-7215	2	Bolt
11	127-2982	4	Retainer
13	133-6745	1	Rail Injector Pipe ASM
15	133-6746	1	Injector No 1 Pipe ASM
16	133-6747	1	Injector No 2 Pipe ASM
17	133-6748	1	Injector No 3 Pipe ASM
18	133-6749	1	Injector No 4 Pipe ASM
19	125-7231	4	Nut

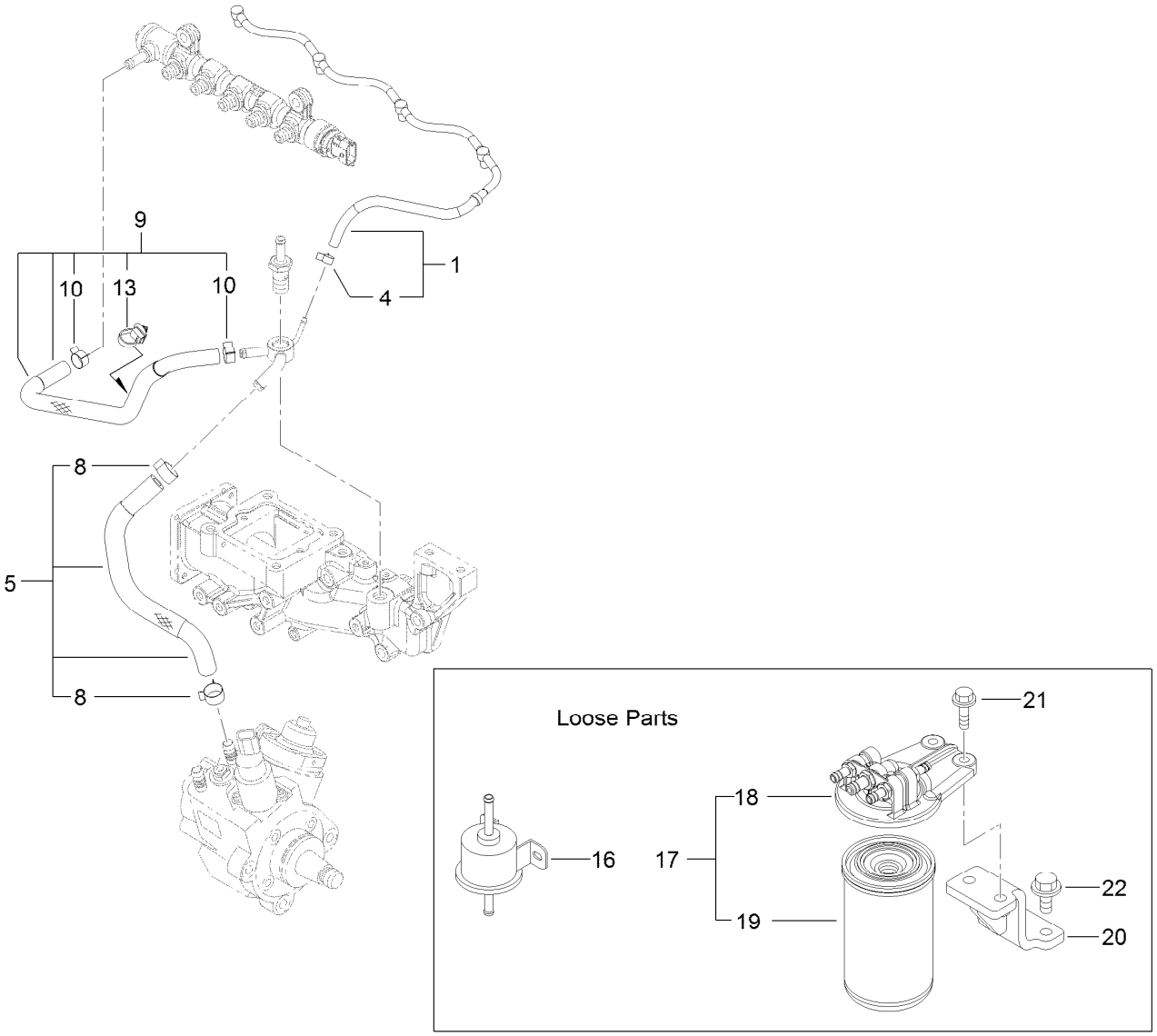

Fuel Pipe Assembly

Ref.	Part Number	Qty.	Description
1	133-6744	1	Fuel/Oil Return Pipe ASM
4	127-3172	1	Clamp-Hose
5	133-6741	1	Fuel/Oil Return Hose ASM
8	125-7191	2	Clamp-Hose
9	133-6742	1	Fuel/Oil Return Hose ASM
10	127-2950	2	Clip-Hose
13	127-3087	1	Band-Clip
16	121-5613	1	Pump-Fuel, Electric
17	127-3075	1	Fuel/Oil Filter ASM
18	127-3076	1	Fuel/Oil Filter Bracket ASM
19	125-8752	1	Filter-Fuel/Oil
20	131-2731	1	Bracket-Filter, Fuel
21	125-7216	2	Bolt
22	133-2496	2	Bolt

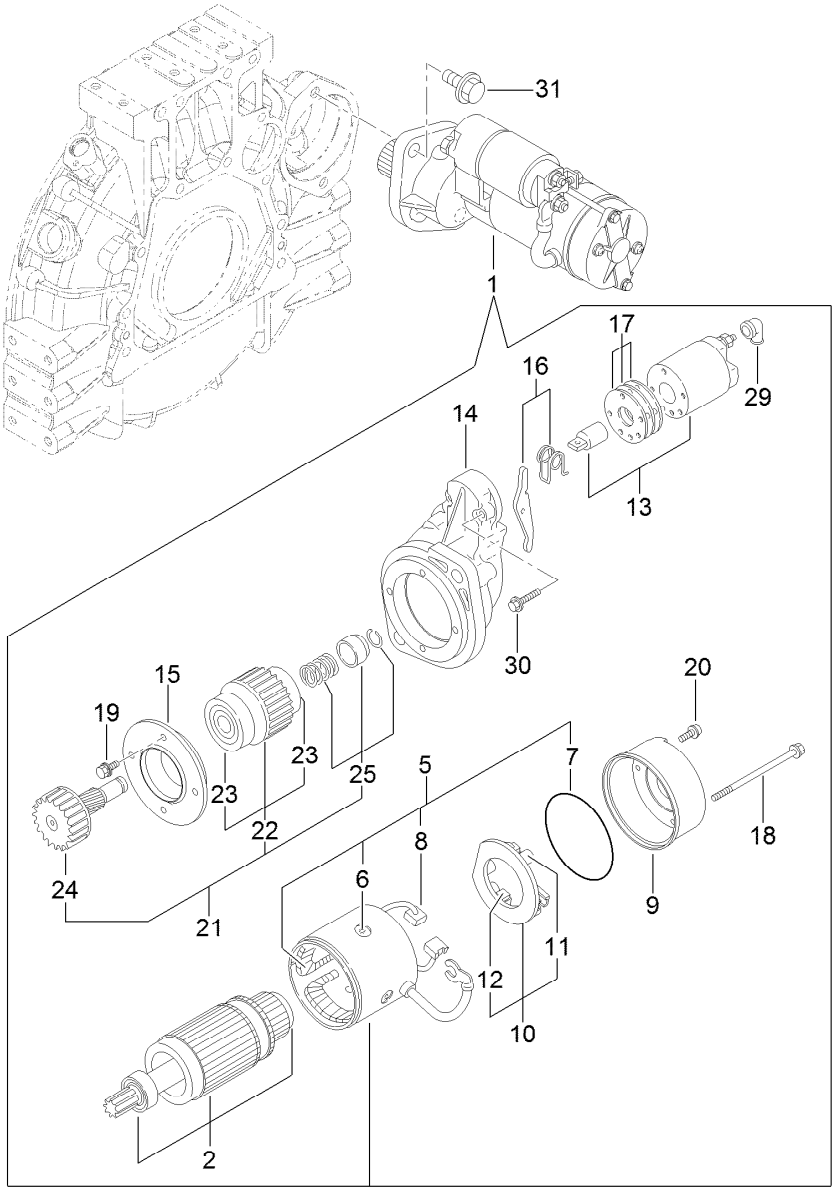

Starter Motor Assembly

Ref.	Part Number	Qty.	Description
1	133-6673	1	Starter
2	133-6674	1	Armature ASM
5	133-6675	1	Field Coil ASM
6	133-6676	4	Screw
7	133-6677	1	O-Ring
8	133-6678	2	Brush
9	133-6679	1	Cover
10	133-6680	1	Brush Holder ASM
11	133-6681	1	Spring
12	133-6682	2	Brush
13	133-6683	1	Switch ASM
14	133-6684	1	Case-Gear
15	133-6685	1	Retainer

Ref.	Part Number	Qty.	Description
16	133-6686	1	Lever Set
17	133-6687	1	Dust Cover ASM
18	133-6688	2	Bolt-Through
19	133-6689	4	Bolt
20	133-6690	2	Screw
21	133-6616	1	Pinion ASM
22	133-6617	1	Clutch ASM
23	133-2510	2	Bearing-Ball
24	133-6618	1	Shaft
25	133-6604	1	Stopper Kit
29	133-6609	1	Cover-Terminal
30	133-6601	2	Bolt
31	125-7225	2	Bolt

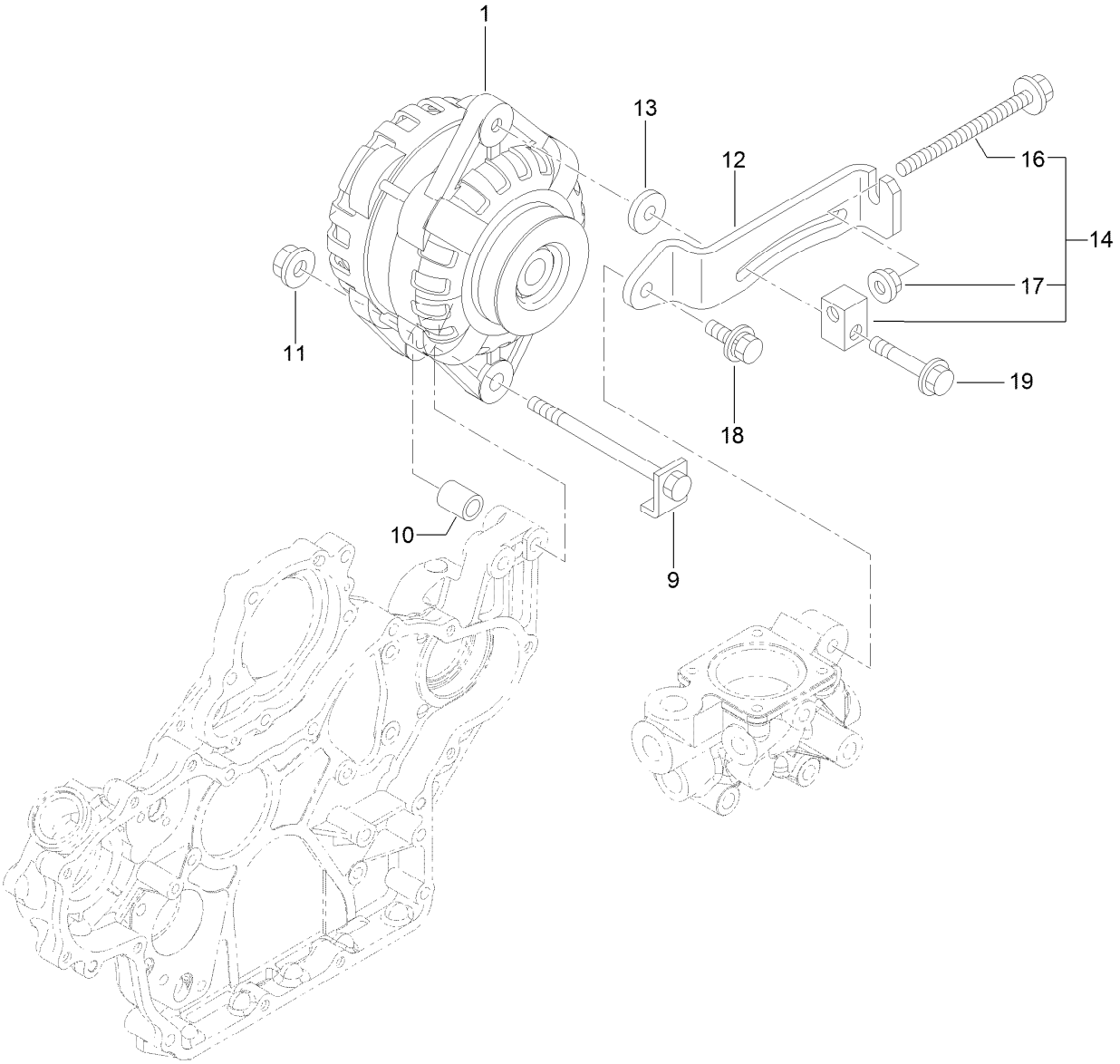

Generator Assembly

Ref.	Part Number	Qty.	Description
1	125-7120	1	Alternator-12V
9	125-7121	1	Bolt-Stopper
10	125-7122	1	Piece-Distance
11	125-7230	1	Nut
12	133-6692	1	Adjuster
13	133-6608	1	Spacer
14	133-6605	1	Adjuster Block ASM
16	133-2494	1	Bolt
17	125-7229	1	Nut
18	133-2491	1	Bolt
19	125-7219	1	Bolt

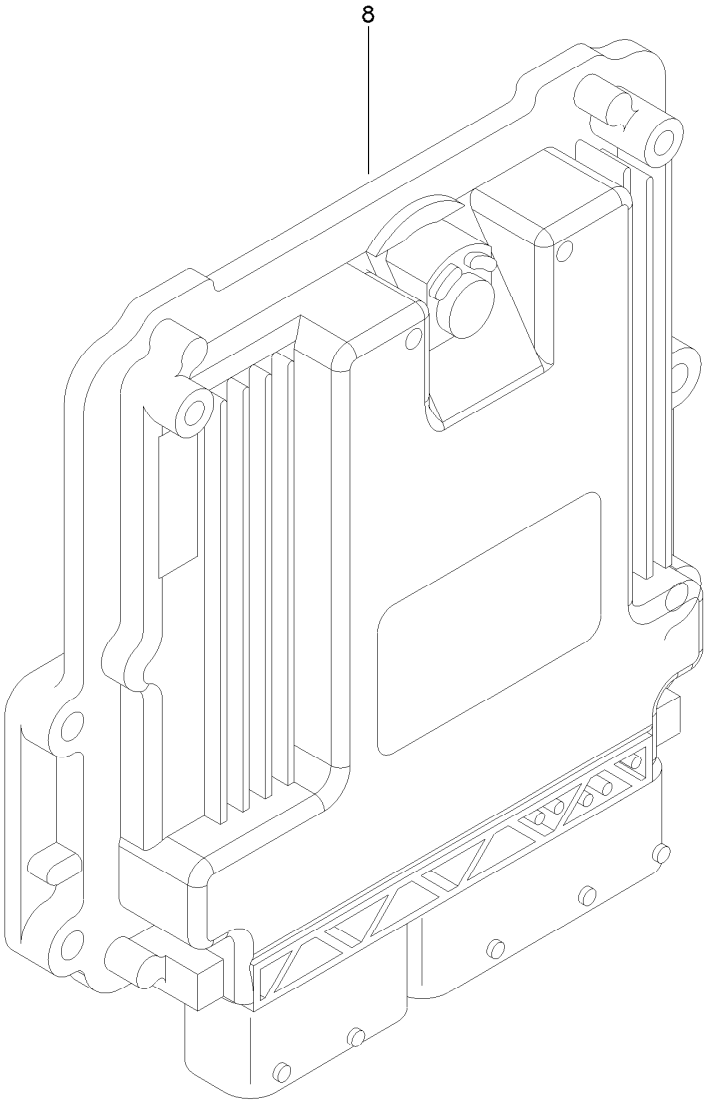

Electronic Control Unit Assembly

Ref.	*Part Number*	*Qty.*	*Description*
8	121-5592	1	Electronic Control Unit

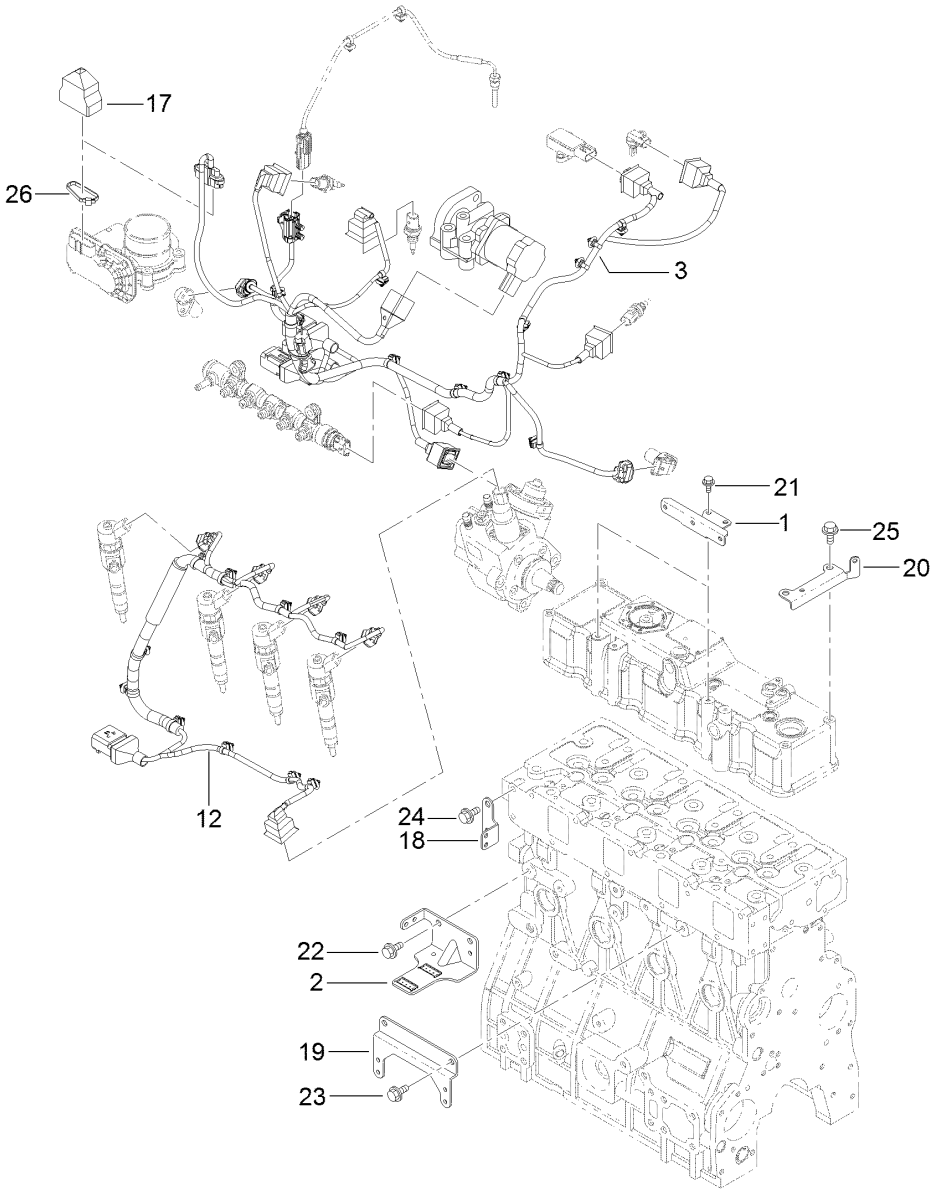

Electric Parts Assembly

Ref.	Part Number	Qty.	Description
1	133-6706	2	Bracket-Harness
2	133-6751	1	Bracket-Connector
3	133-6771	1	Harness-B, E C O
12	133-6752	1	Harness-C, E C O Engine
17	131-2713	1	Boot-Cap
18	127-3090	1	Bracket-Harness
19	133-6753	1	Bracket-Harness
20	133-6772	1	Bracket-Harness
21	125-7206	4	Bolt
22	125-7212	2	Bolt
23	125-7212	2	Bolt
24	125-7212	2	Bolt
25	125-7212	2	Bolt
26	127-3188	1	Band

Gasket Set

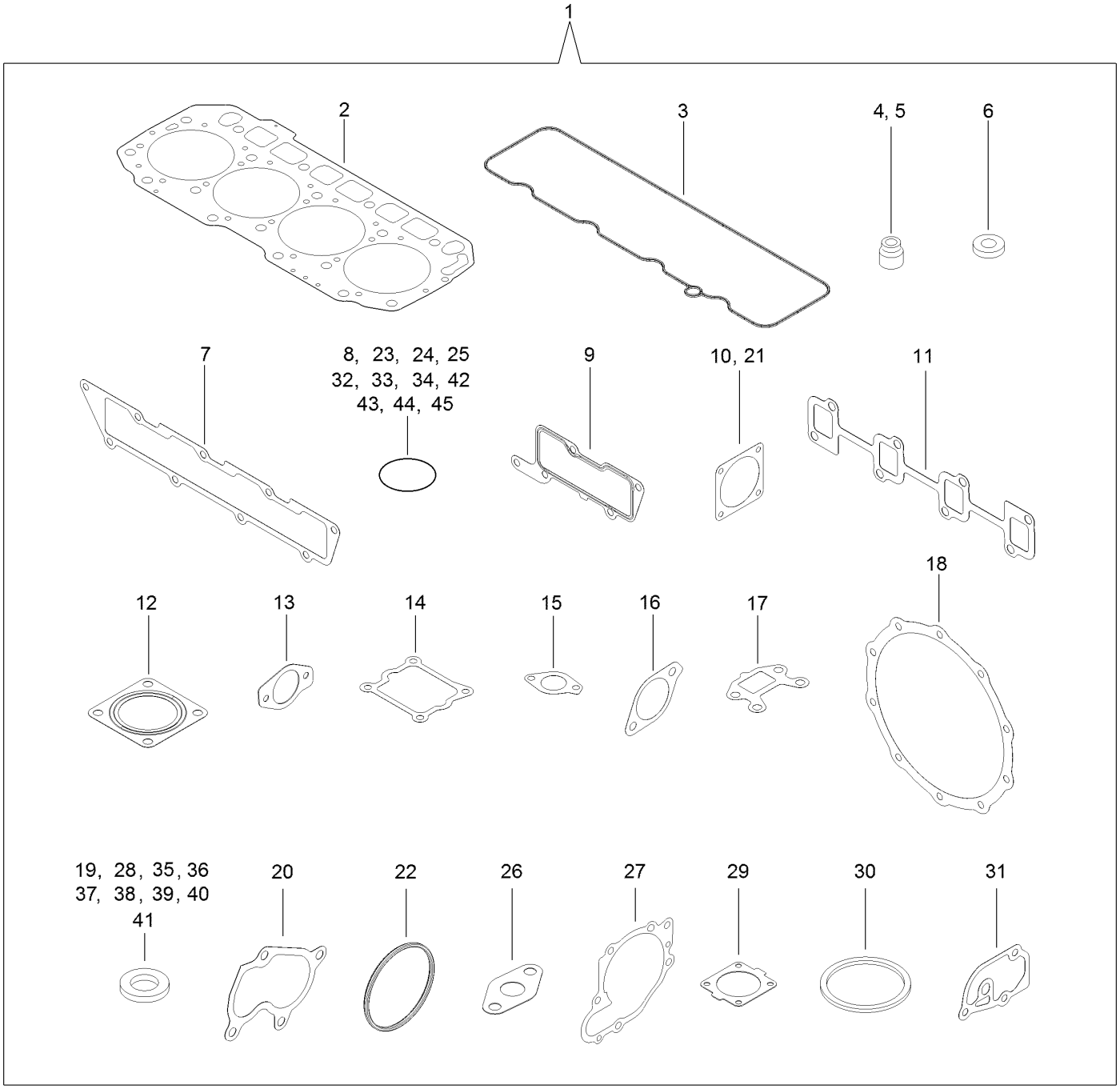
1
2
3
4, 5
6
7
8, 23, 24, 25
32, 33, 34, 42
43, 44, 45
9
10, 21
11
12
13
14
15
16
17
18
19, 28, 35, 36
37, 38, 39, 40
41
20
22
26
27
29
30
31

Gasket Set (continued)

Ref.	Part Number	Qty.	Description
1	133-2509	1	Gasket Kit
2	133-6700	1	Gasket-Head, Cylinder
3	132-4907	1	Gasket-Cover, Head
4	127-2986	4	Seal-Stem, Valve
5	127-3027	4	Seal-Stem, Valve
6	127-3021	4	Gasket-Injector
7	133-6708	1	Gasket-Manifold
8	127-3033	1	O-Ring
9	133-6709	1	Gasket-Collector
10	127-3037	2	Gasket-Throttle
11	133-6710	1	Gasket-Manifold
12	127-2987	3	Gasket-Silencer
13	133-6698	2	Gasket-Cooler, E G R
14	133-6717	1	Gasket-V Spacer, E G R
15	127-3016	1	Gasket
16	133-6723	1	Gasket-In, E G R-V
17	133-6724	1	Gasket-Out, E G R-V
18	127-3162	2	Gasket-D P F
19	127-3056	4	Gasket-Sensor
20	133-6619	1	Gasket
21	133-6625	1	Gasket
22	133-6693	2	Packing-Washer
23	133-6653	2	O-Ring
24	133-6654	1	O-Ring
25	127-2985	1	O-Ring
26	133-6666	1	Gasket
27	133-6658	1	Gasket-Pump, Water
28	125-6979	2	Gasket
29	133-6613	1	Gasket-Thermostat
30	133-6614	1	Gasket-Thermostat
31	133-6660	1	Gasket
32	131-2106	1	O-Ring
33	127-3074	1	O-Ring
34	130-7433	1	O-Ring
35	125-7174	7	Washer-Seal
36	125-7176	1	Washer-Seal
37	127-3166	2	Washer-Seal
38	125-7177	1	Washer-Seal
39	125-7192	1	Gasket
40	125-7193	2	Gasket
41	127-3174	2	Gasket
42	93-0400	1	O-Ring
43	93-0418	3	O-Ring
44	125-7197	1	O-Ring
45	127-3176	1	O-Ring

Attachments and Accessories

For 31698 Groundsmaster 5900/5910 Rotary Mower

Product Name	Model/Part
Dry Battery	104-8162
12 Volt Battery	106-5190
Premium All Season Hydraulic Fluid (55 Gallon Drum)	108-1177
Premium All Season Hydraulic Fluid (5 Gallon Pail)	108-1178
Premium All Purpose Grease (Tube)	108-1190
Primary Engine Air Filter	108-3815
Vinyl Backrest Extension Kit	119-7718
Beacon Kit	119-8256
Castor Wrench	121-3874
Premium Engine Oil 15w40 (55 Gallon Drum)	121-6394
Premium Engine Oil 15w40 (5 Gallon Pail)	121-6395
Fuel/Water Separator Filter	125-2915
Engine Oil Filter	125-7025
Fuel Filter	125-8752
Exterior Mirror Kit	130-5448
Safety Air Filter Element	130-9070
CE Kit, 2016 and After Groundsmaster 5900 Tier 4 Series Traction Unit	132-1340
Atomic Blade Service Pack (20in)	132-1391
Standard Blade Service Pack (20in)	132-1392
Blade/Belt Kit	132-1440
Polycarbonate Window Kit	132-3420
Universal Sunshade	30349
Red Universal Sunshade	30552
EU Light Kit	30653
2 Post ROPS Extension Kit	31353
Backup Alarm Kit	31512
LED Work Light Kit, 2015 and After Cab and 2 Post ROPS Extension Kit	31596
Center Deck	31601
Right Wing Deck	31602
Left Wing Deck	31603
Leaf Mulching Kit	31604
Fluid/Filter MVP Kit	31609
Auxiliary Braking System	31701
Hydraulic Filter	75-1310
Hydraulic Filter	86-6110
10in Foam Filled Castor Wheel	93-5973

For 31699 Groundsmaster 5900/5910 Rotary Mower

Product Name	Model/Part
Dry Battery	104-8162
12 Volt Battery	106-5190
Premium All Season Hydraulic Fluid (55 Gallon Drum)	108-1177
Premium All Season Hydraulic Fluid (5 Gallon Pail)	108-1178
Premium All Purpose Grease (Tube)	108-1190

Attachments and Accessories (continued)

Primary Engine Air Filter 108-3815
Backrest Extension Kit 119-7719
Castor Wrench 121-3874
Premium Engine Oil 15w40 (55 Gallon Drum) 121-6394
Premium Engine Oil 15w40 (5 Gallon Pail) 121-6395
Air Filter 121-8457
Fuel/Water Separator Filter 125-2915
Engine Oil Filter 125-7025
Fuel Filter 125-8752
Safety Air Filter Element 130-9070
CE Kit, 2016 and After Groundsmaster 5900 Tier 4 Series Traction Unit 132-1340
Atomic Blade Service Pack (20in) 132-1391
Standard Blade Service Pack (20in) 132-1392
Blade/Belt Kit 132-1440
Pre-Filter Screen Kit, 2015 and After Groundsmaster Series Cab 30647
EU Light Kit 30653
North American Cab Light Kit, 2015 and After Groundsmaster 5910/4010/4110 Series Traction Unit 30706
Beacon Kit, 2015 and After Groundsmaster Series Traction Unit 31509
Backup Alarm Kit 31512
LED Work Light Kit, 2015 and After Cab and 2 Post ROPS Extension Kit 31596
Center Deck 31601
Right Wing Deck 31602
Left Wing Deck 31603
Leaf Mulching Kit 31604
Fluid/Filter MVP Kit 31609
Auxiliary Braking System 31701
Hydraulic Filter 75-1310
Hydraulic Filter 86-6110
10in Foam Filled Castor Wheel 93-5973

TORO®

Count on it.