Form No. 3443-428 Rev D

TORO®

Count on it.

Parts Catalog

# Groundsmaster® 5910

## Rotary Mower with Cab

**Model No. 31699—Serial No. 407900101 and Up**

Register at www.Toro.com.
Original Instructions (EN)

CE

*3443-428* D

# Ordering Replacement Parts

To order replacement parts, please supply the part number, the quantity, and the description of each part desired.

### Understanding Reference Numbers

Each identified part in an illustration has a reference number. The reference number for a part also appears in the parts list, along with other information about the part.

This catalog uses two special reference number formats, one to indicate parts in a service assembly and another to indicate the quantity of a given part in an illustration.

### Service Assembly Reference Numbers

Parts in service assemblies have reference numbers in the form a:b. The a represents the reference number of the entire service assembly and the b represents a sequential number unique to each part within the service assembly.

For example, a wheel assembly might be identified by reference number 6, the tire by 6:1, the valve by 6:2, and the wheel by 6:3. When you order the assembly identified by reference number 6, you receive all parts identified by reference numbers 6:1,6:2, and 6:3. However, you may also order any part individually. Reference numbers of this type appear in illustration and in parts lists.

### Reference Numbers Indicating Quantity

In an illustration, if a reference number indicates more than one part, the reference number has the form nX y. The n represents the quantity of the part, the X is the multiplication symbol, and the y represents the reference number.

For example, in an illustration, the reference number 2X 37 means that two of the parts identified by reference number 37 are indicated.

# Contents


Frame Assembly . . . 6
Rear Axle Assembly . . . 8
Axle Assembly No. 114-5982-01 . . . 10
Tie Rod Assembly No. 110-6049-03 . . . 11
Engine and Mount Assembly . . . 12
Alternator Assembly . . . 14
Hydraulic Cooling Assembly . . . 16
Radiator and Cooling Fan Assembly . . . 18
Air Cleaner Assembly . . . 20
Fuel System Assembly . . . 21
Traction Hydraulic Assembly . . . 22
Piston Pump Assembly No. 130-9150 . . . 24
Hydraulic Gear Pump Assembly No. 130-2520 . . . 26
Traction Manifold Assembly . . . 28
Hydraulic Traction Manifold Assembly No. 137-5623 . . . 30
Hydraulic Traction Motors Assembly . . . 32
Hydraulic Motor Assembly No. 125-5391 . . . 34
Hydraulic Motor Assembly No. 125-5434 . . . 36
Hydraulic Traction Assembly . . . 38
Hydraulic Motor Assembly No. 132-1425 . . . 40
Hydraulic Tank Assembly . . . 42
Hydraulic Cutting Circuit Assembly . . . 44
Center Cutting Deck Drive Valve Assembly . . . 46
Hydraulic Manifold Assembly No. 132-1394 . . . 47
LH Cutting Deck Drive Valve Assembly . . . 48
Hydraulic Manifold Assembly No. 132-1395 . . . 49
RH Cutting Deck Drive Valve Assembly . . . 50
Hydraulic Manifold Assembly No. 132-1396 . . . 51
Hydraulic Motor Assembly No. 125-5392 . . . 52
Hydraulic Steering/Lift Circuit Assembly . . . 54
Steering/Lift Valve Assembly No. 137-5626 . . . 56
Hydraulic Steering/Lift Manifold Assembly No. 137-5625 . . . 58
Hydraulic Cylinder Assembly No. 114-4831 . . . 60
Hydraulic Cylinder Assembly No. 114-4830 . . . 61
Hydraulic Cylinder Assembly No. 114-5685 . . . 62
Manual Parking Brake Manifold Assembly No. 132-1378 . . . 64
Hydraulic Parking Brake Manifold Assembly No. 132-1399 . . . 65
Hydraulic Steering Assembly . . . 66
Steering Valve Assembly No. 132-6256 . . . 68
Hydraulic Cylinder Assembly No. 132-1308 . . . 70
Hydraulic Filter Manifold Assembly . . . 71
Side Panel and Bumper Assembly . . . 72
Hood Assembly . . . 74
Center Front Deck Connection Assembly . . . 76
LH Front Lift Arm Assembly No. 138-6368 . . . 78
RH Front Lift Arm Assembly No. 138-6369 . . . 80
Center Front and Winglet Deck Assembly . . . 82
Center Front Deck and Decal Assembly No. 130-9201 . . . 83
Right Front Deck and Decal Assembly No. 130-9218 . . . 84
Left Front Deck and Decal Assembly No. 130-9210 . . . 85
Center Deck Belt, Pulley and Spindle Assembly . . . 86
Single Driving Spindle Assembly No. 139-1034 . . . 88
Double Driven Spindle Assembly No. 139-1033 . . . 90
High Driven Spindle Assembly No. 139-1032 . . . 92



**© 2024—The Toro® Company**


**8111 Lyndale Avenue South**
**Bloomington, MN 55420**





**Contact us at www.Toro.com.**
**Printed in the USA.**


**All Rights Reserved**

# Contents (continued)


Center Deck Roller, Skid and Caster Wheel Assembly . . . 94
10 Inch Wheel Assembly No. 93-4240 . . . 95
Center Front Deck Blade Assembly . . . 96
Center Front Deck Belt Cover Assembly . . . 97
Center Front Deck Chamber and Discharge Assembly . . . 98
Center Front Deck Transport Damper Assembly . . . 99
Left Hand Deck Connection Assembly . . . 100
Left Hand Deck Belt, Pulley and Spindle Assembly . . . 102
Left Hand Deck Decal Assembly No. 130-9271 . . . 104
Left Hand Deck Skid and Caster Wheel Assembly . . . 105
Left Hand Deck Blade Assembly . . . 106
Left Hand Deck Belt Cover Assembly . . . 107
Left Hand Deck Chamber Assembly . . . 108
Left Hand Deck Stop Assembly . . . 109
Left Hand Deck Impact Arm and Limit Switch Assembly . . . 110
Impact Damper Assembly No. 137-1648 . . . 112
Left Hand Deck Transport Lock Assembly . . . 114
Right Hand Deck Connection Assembly . . . 116
Right Hand Deck Belt, Pulley and Spindle Assembly . . . 118
Right Hand Deck Decal Assembly No. 130-9241 . . . 120
Right Hand Deck Skid and Caster Wheel Assembly . . . 121
Right Hand Deck Blade Assembly . . . 122
Right Hand Deck Belt Cover Assembly . . . 123
Right Hand Deck Chamber Assembly . . . 124
Right Hand Deck Stop Assembly . . . 125
Right Hand Deck Impact Arm and Limit Switch Assembly . . . 126
Right Hand Deck Transport Lock Assembly . . . 128
Platform Assembly . . . 130
Seat Mount Assembly . . . 132
Air Ride Seat Suspension Assembly No. 130-2702 . . . 134
Control Console Assembly . . . 136
Traction Pedal Assembly . . . 138
Steering Column Assembly . . . 140
Steering Column Assembly No. 132-6230 . . . 141
Front Electrical Component Assembly . . . 142
Mid Electrical Component Assembly . . . 143
Rear Electrical Component Assembly . . . 144
Battery Cable Routing Assembly . . . 146
Wire Harness Assembly . . . 148
Platform Wire Harness Assembly No. 122-1640 . . . 150
Rear Wire Harness Assembly No. 122-1639 . . . 152
Engine Wire Harness Assembly No. 122-1556 . . . 154
Cab Mounting Assembly . . . 156
Cloth Premium Seat Assembly No. 117-9429 . . . 158
A/C Compressor Mount and Cab Fluids Assembly . . . 160
Cab Frame, Mirror and Decal Assembly . . . 162
Windshield Wiper, Filter and Air Conditioning Assembly . . . 164
Air Conditioning Duct Assembly No. 132-3468 . . . 166
Window and Door Assembly . . . 168
Left Hand Door Assembly . . . 170
Right Hand Door Assembly . . . 172
Left Side Hose Assembly . . . 174
Pre-Filter Screen Assembly . . . 176
Right Side Hose Assembly . . . 178

# Contents (continued)

Roof and Headliner Assembly . . . 180
Headliner Wire Harness and Control Assembly . . . 182
Mixing Box Mounting Bracket and Water Tray Assembly . . . 184
Blower Fan and Evaporator Core Assembly . . . 186
Heat/Air Conditioner Housing Assembly . . . 188
Air Diverter and Expansion Valve Assembly . . . 190
Air Diverter Assembly No. 121-8369 . . . 192
Cylinder Block Assembly . . . 194
Gear Housing Assembly . . . 195
Flywheel Housing and Oil Sump Assembly . . . 196
Camshaft and Driving Gear Assembly . . . 197
Suction Manifold Assembly . . . 198
Exhaust Manifold Assembly . . . 199
Cylinder Head and Cover Assembly . . . 200
Diesel Particulate Filter Assembly . . . 202
Turbine Assembly . . . 204
Crankshaft and Piston Assembly . . . 205
Lubrication and Oil System Assembly . . . 206
Lubrication Oil Pipe Assembly . . . 207
Cooling Water System Assembly . . . 208
Fuel Supply Pump Assembly . . . 209
Fuel Injection Valve Assembly . . . 210
Fuel Pipe Assembly . . . 211
Starter Motor Assembly . . . 212
Generator Assembly . . . 213
Electronic Control Unit Assembly . . . 214
Electric Parts Assembly . . . 215
Gasket Set . . . 216
Attachments and Accessories . . . 218

# Frame Assembly

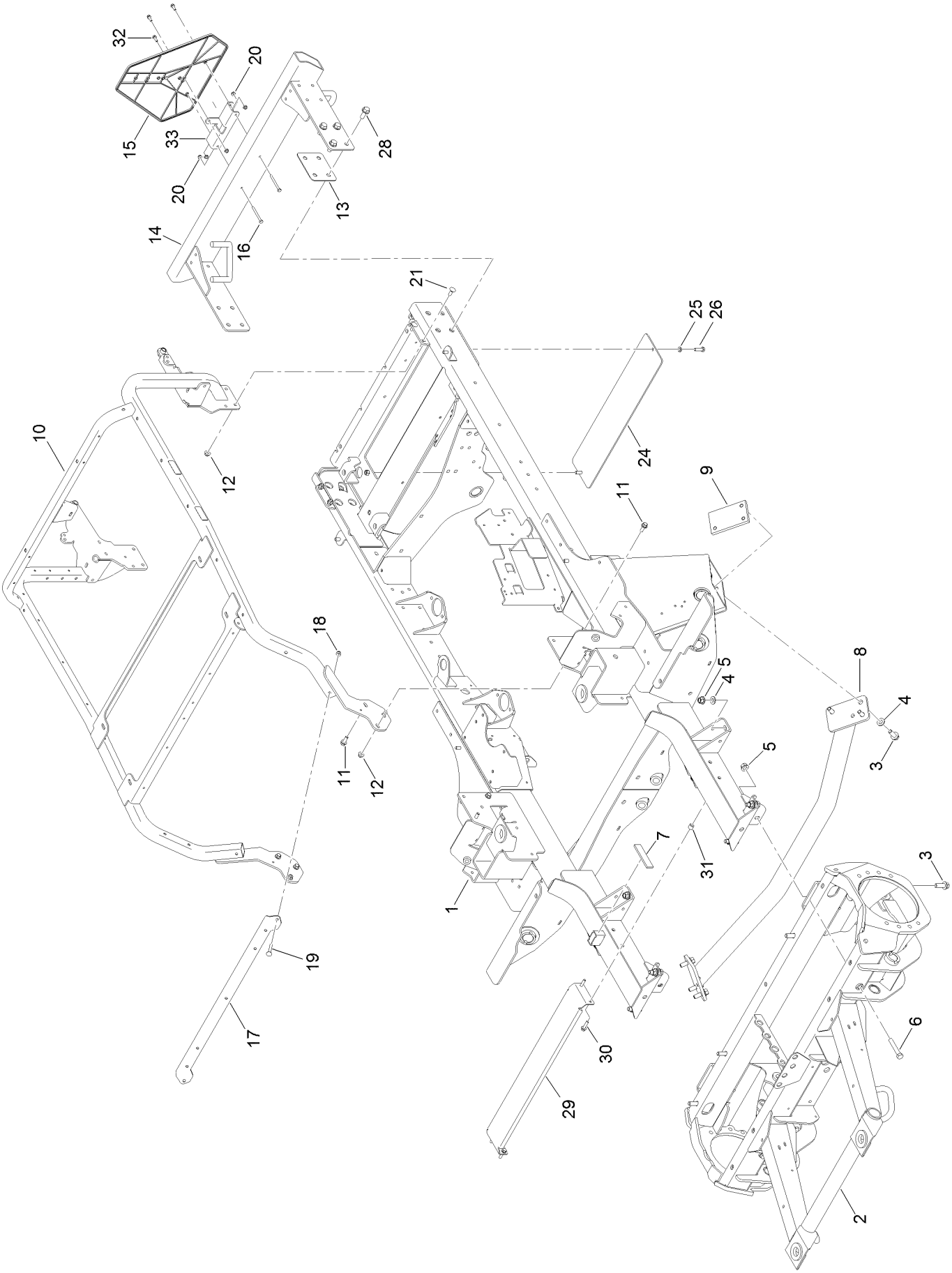

# Frame Assembly (continued)

| Ref. | Part Number | Qty. | Description |
|---|---|---|---|
| 1 | 130-2450-01 | 1 | Frame |
| 2 | 137-5608-01 | 1 | Frame-Front |
| 3 | 100-6116 | 14 | Screw-HHF |
| 4 | 3256-26 | 14 | Washer-Flat |
| 5 | 99-5107 | 10 | Nut-Lock |
| 6 | 325-12 | 2 | Screw-HH |
| 7 | 115-5465 | 1 | Seal-Trim |
| 8 | 114-5969-01 | 1 | Crossmember |
| 9 | 114-5990 | 2 | Plate-Tapped |
| 10 | 132-1387 | 1 | Cooler Mount ASM |
| 11 | 3234-42 | 8 | Screw-HHF |
| 12 | 104-8301 | 6 | Nut-HF, NI |
| 13 | 115-5458-0P | 1 | Shim-Bumper |
| 14 | 131-2310-03 | 1 | Bumper |
| 15 | 92-7760 | 1 | Emblem-Vehicle, Slow Moving |
| 16 | 321-14 | 2 | Screw-HH |
| 17 | 130-2570-0P | 1 | Bracket-Mount, Fuse |
| 18 | 104-8300 | 2 | Nut-HF, NI |
| 19 | 3230-7 | 2 | Bolt-CARR |
| 20 | 104-7201 | 5 | Nut-HF, NI |
| 21 | 3231-2 | 4 | Bolt-CARR |
| 24 | 136-4429-01 | 1 | Cover-Frame |
| 25 | 3253-21 | 2 | Washer-Lock |
| 26 | 323-7 | 2 | Screw-HH |
| 28 | 3234-38 | 8 | Screw-HHF |
| 29 | 132-1401-0P | 1 | Strap-Support, Tank |
| 30 | 3234-36 | 4 | Screw-HHF |
| 31 | 107-3677 | 2 | Spacer-Tube |
| 32 | 115-5103 | 3 | Screw-HHF |
| 33 | 137-5535-03 | 1 | Mount |

# Rear Axle Assembly

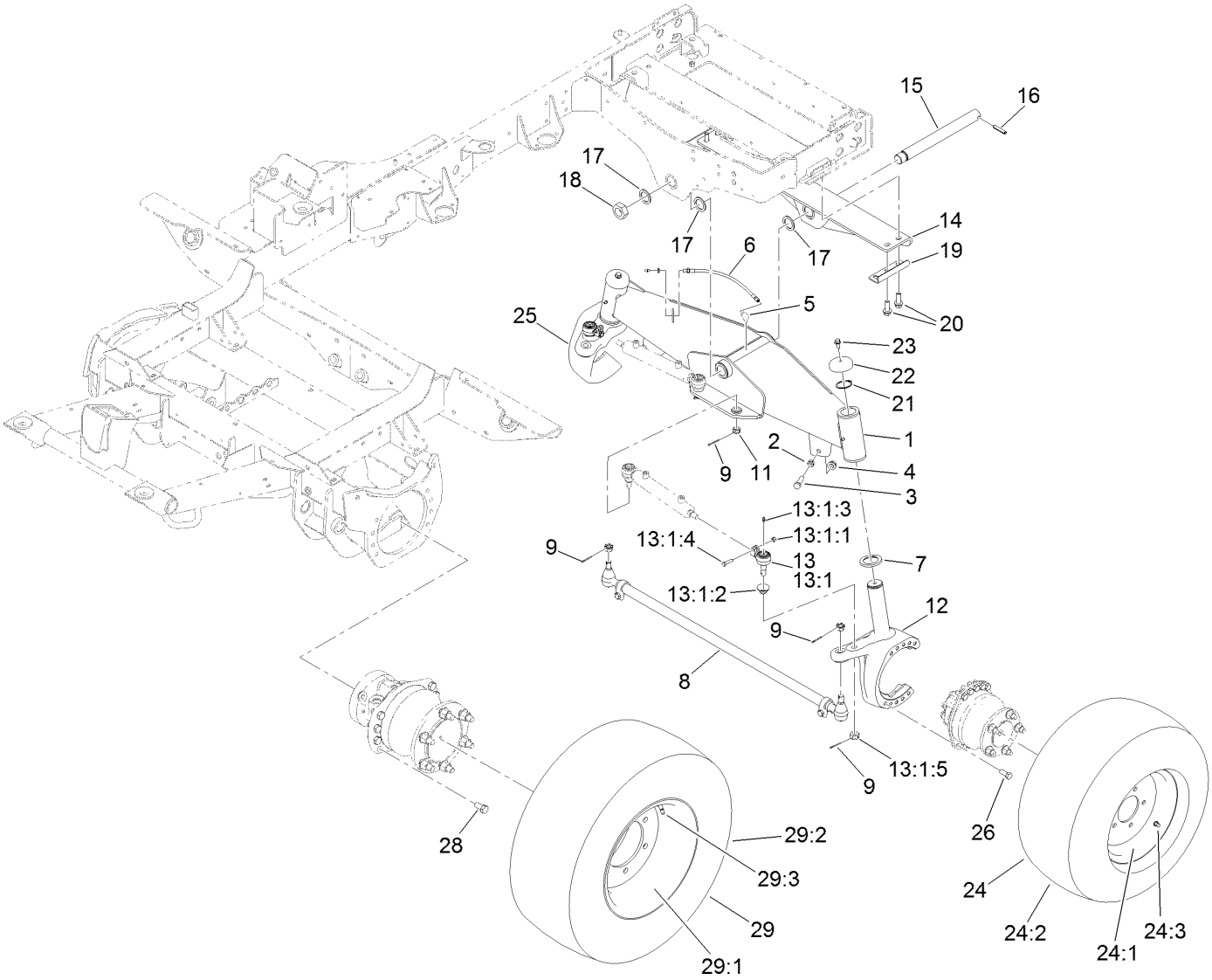

# Rear Axle Assembly (continued)

| Ref. | Part Number | Qty. | Description |
|---|---|---|---|
| 1 | 114-5982-01 | 1 | Axle ASM |
| 2 | 3218-5 | 2 | Nut-Jam |
| 3 | 325-7 | 2 | Screw-HH |
| 4 | 99-5107 | 2 | Nut-Lock |
| 5 | 2811-7 | 1 | Elbow |
| 6 | 114-5586 | 1 | Hose ASM (With Fitting) |
| 7 | 100-2508 | 2 | Washer-Thrust |
| 8 | 110-6049-03 | 1 | Tie Rod ASM |
| 9 | 3272-12 | 6 | Pin-Cotter |
| 11 | 32136-13 | 2 | Nut-SHH |
| 12 | 130-9043-01 | 1 | Spindle-Steer, LH |
| 13 | 106-6895-03 | 2 | Ball Joint ASM |
| 13:1 | | 1 | Joint-Ball ● |
| 13:1:1 | 32136-13 | 1 | Nut-SHH |
| 13:1:2 | 106-6896 | 1 | Seal |
| 13:1:3 | 302-5 | 1 | Fitting-Grease |
| 13:1:4 | 3210-7 | 1 | Screw-HH |
| 13:1:5 | 32152-5 | 1 | Nut-Hex |
| 14 | 110-6033-01 | 1 | Support-Axle |
| 15 | 114-5970 | 1 | Shaft-Pivot |
| 16 | 32121-110 | 1 | Pin-Roll, Slotted |
| 17 | 98-1452 | 3 | Washer-Thrust |
| 18 | 3296-68 | 1 | Nut-Lock, NI |
| 19 | 130-9033-01 | 2 | Guard-Hose |
| 20 | 100-6116 | 4 | Screw-HHF |
| 21 | 100-4196 | 2 | Ring-Retaining |
| 22 | 100-3362 | 2 | Cap-Spindle |
| 23 | 3234-12 | 2 | Screw-HHF |
| 24 | 127-3509 | 2 | Wheel And Tire ASM |
| 24:1 | 125-5379 | 1 | Wheel |
| 24:2 | 117-2901 | 1 | Tire |
| 24:3 | 5108 | 1 | Valve |
| 25 | 130-9041-01 | 1 | Spindle-Steer, RH |
| 26 | 325-5 | 20 | Screw-HH |
| 28 | 327-3 | 16 | Screw-HH |
| 29 | 131-2380 | 2 | Wheel And Tire ASM |
| 29:1 | 131-2381 | 1 | Wheel |
| 29:2 | 131-2382 | 1 | Tire |
| 29:3 | 232-24 | 1 | Stem-Valve |

● Not serviced separately

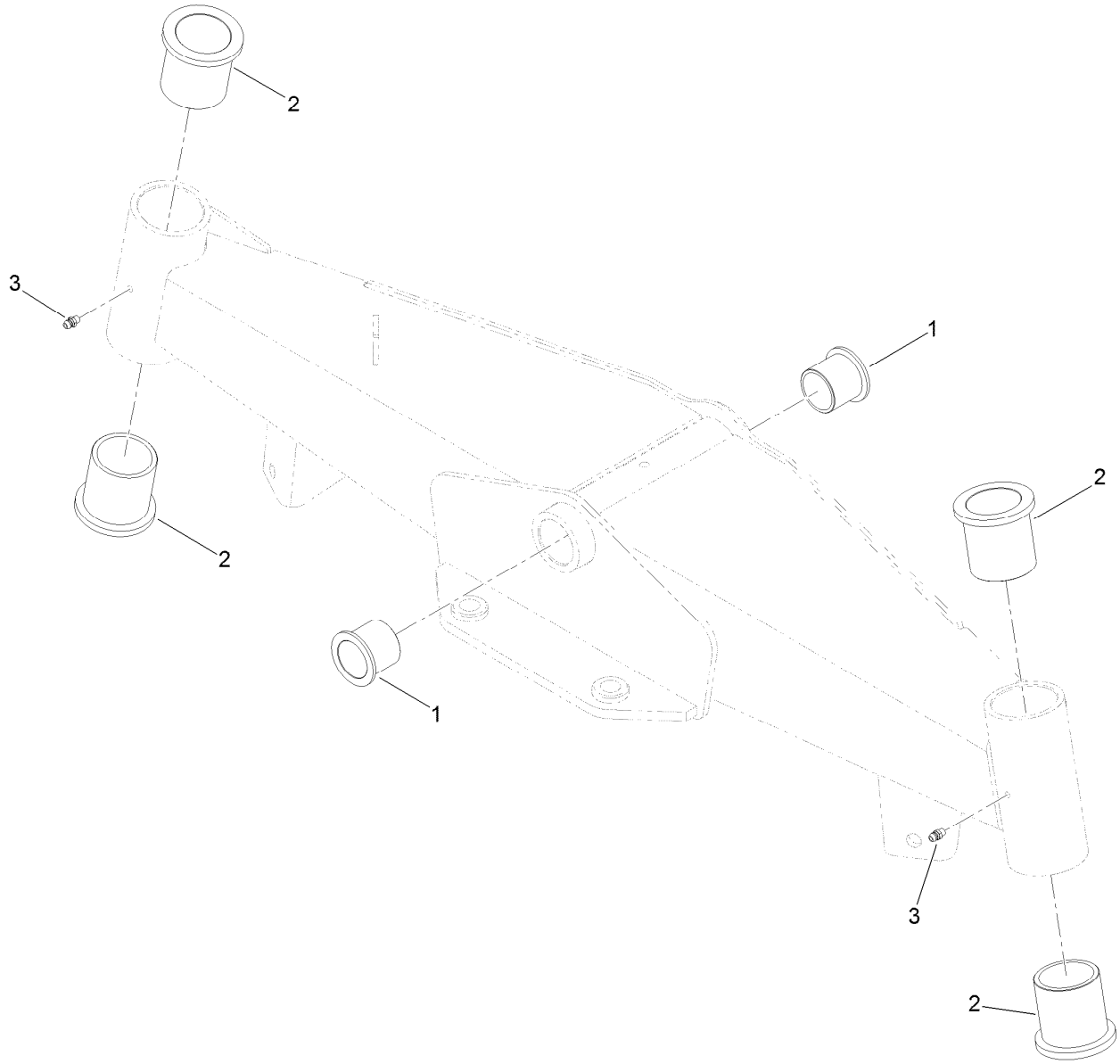


# Axle Assembly No. 114-5982-01

| *Ref.* | *Part Number* | *Qty.* | *Description* |
|---|---|---|---|
| 1 | 69-6470 | 2 | Bushing-Caster |
| 2 | 100-2506 | 4 | Bushing-Castor |
| 3 | 302-5 | 2 | Fitting-Grease |

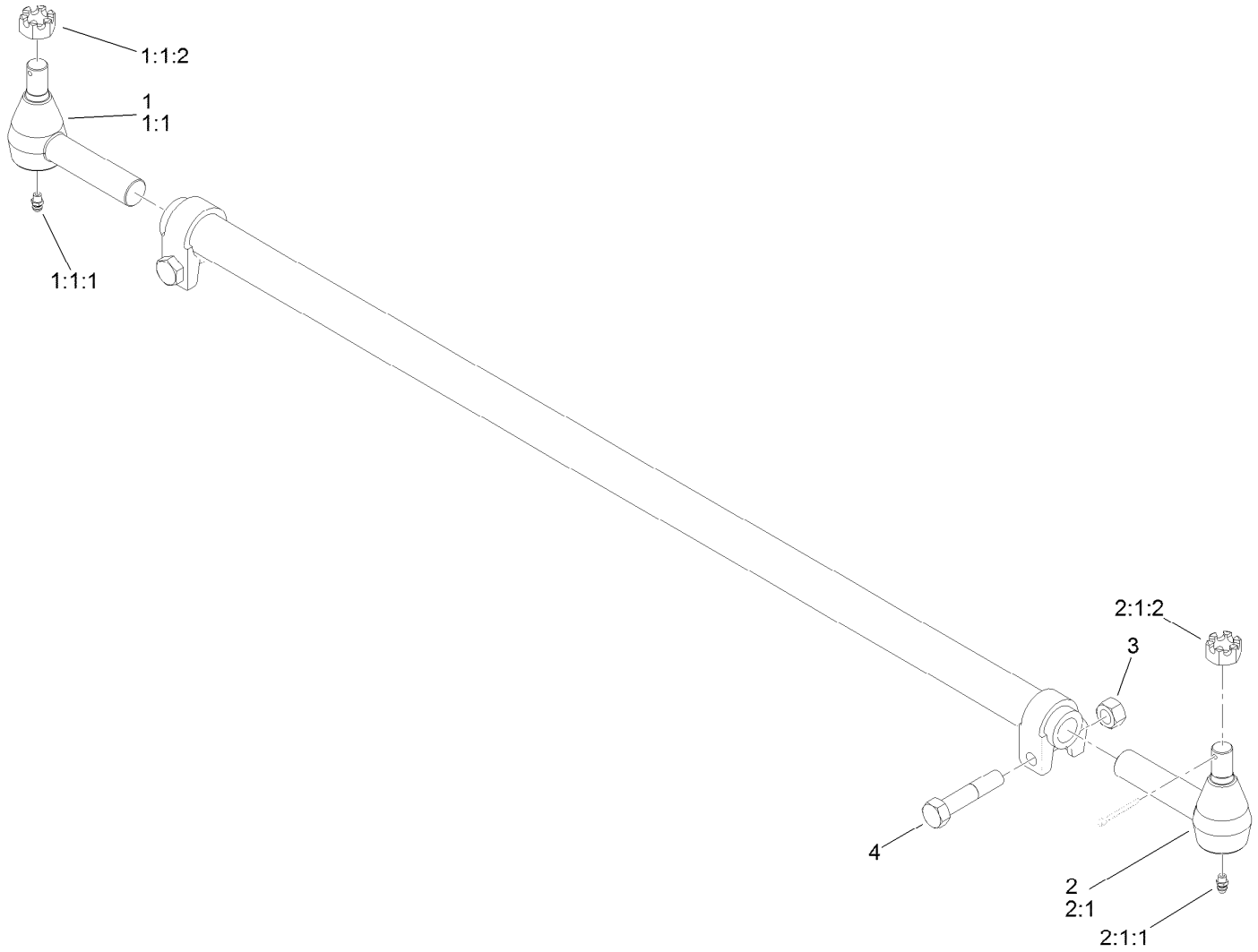


# Tie Rod Assembly No. 110-6049-03

| *Ref.* | *Part Number* | *Qty.* | *Description* |
|---|---|---|---|
| 1 | 110-6141-03 | 1 | RH Tie Rod End ASM |
| 1:1 | | 1 | Rod End-Tie, RH ● |
| 1:1:1 | 302-5 | 1 | Fitting-Grease |
| 1:1:2 | 32136-2 | 1 | Nut-SHH |
| 2 | 110-6142-03 | 1 | LH Tie Rod End ASM |
| 2:1 | | 1 | Rod End-Tie, LH ● |
| 2:1:1 | 302-5 | 1 | Fitting-Grease |
| 2:1:2 | 32136-2 | 1 | Nut-SHH |
| 3 | 44-2200 | 1 | Screw-Blade |
| 4 | 32153-7 | 1 | Nut-Lock |

● Not serviced separately

# Engine and Mount Assembly

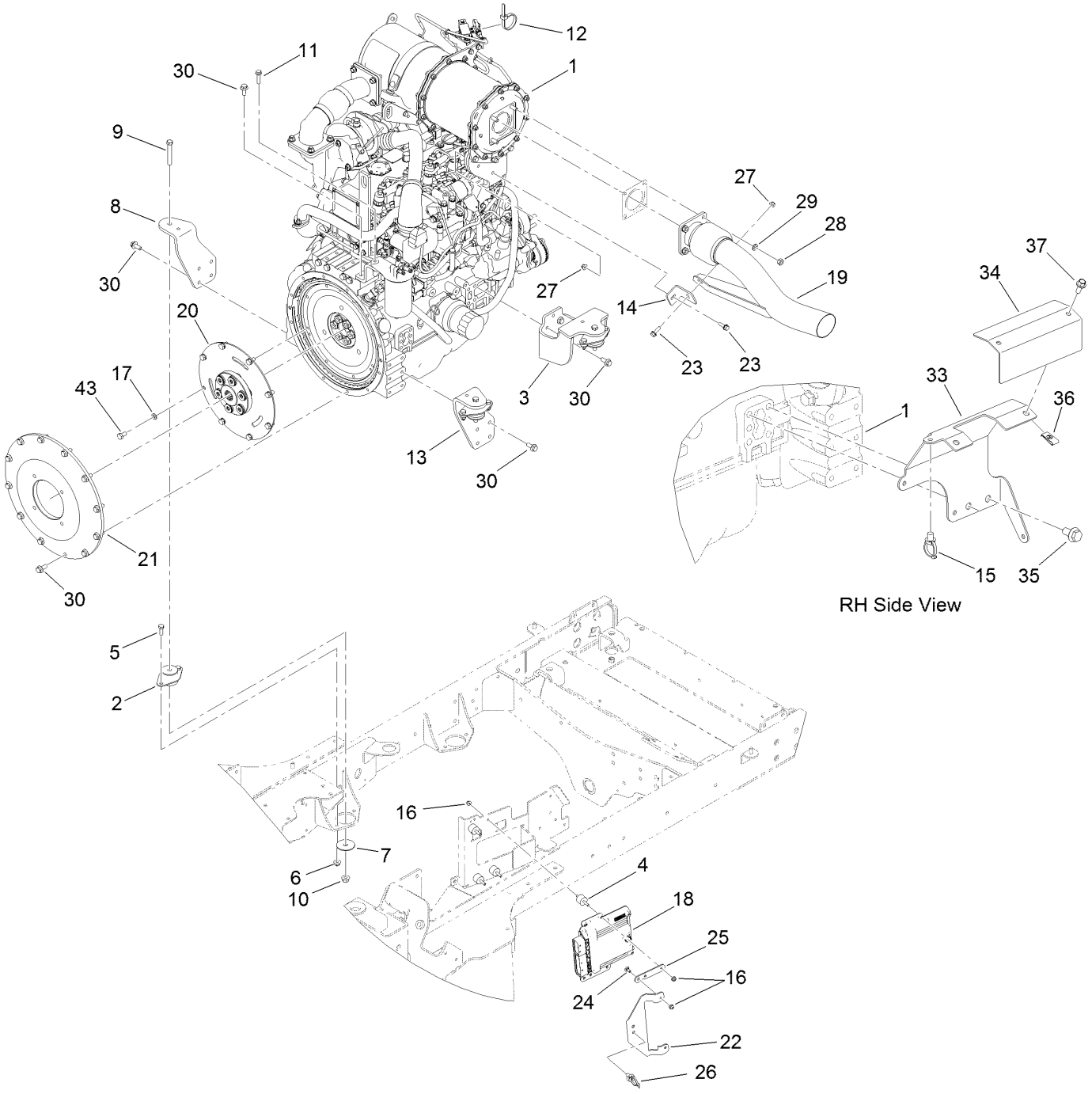

# Engine and Mount Assembly (continued)

| Ref. | Part Number | Qty. | Description |
|---|---|---|---|
| 1 | 138-6921 | 1 | Engine-Yanmar |
| 2 | 136-4885 | 4 | Mount-Engine |
| 3 | 130-2409-0P | 2 | Mount-Motor, Rear |
| 4 | 132-1356 | 4 | Mount-Isolator |
| 5 | 323-6 | 8 | Screw-HH |
| 6 | 104-8301 | 8 | Nut-HF, NI |
| 7 | 87-5100 | 4 | Washer-Snubbing |
| 8 | 130-2415-0P | 1 | Mount-Motor, RH Front |
| 9 | 324-12 | 4 | Screw-HH |
| 10 | 114-8417 | 4 | Nut-HF, NI |
| 11 | 33104-030 | 2 | Screw-HHF |
| 12 | 3290-378 | 1 | Tie-Cable |
| 13 | 130-2414-0P | 1 | Mount-Motor, LH Front |
| 14 | 130-2424 | 1 | Bracket-Exhaust |
| 15 | 32180-030 | 1 | Clip-Tie |
| 16 | 104-7201 | 10 | Nut-HF, NI |
| 17 | 107-1413 | 8 | Washer-Hardened |
| 18 | 121-5592 | 1 | Electronic Control Unit |
| 19 | 132-1628 | 1 | Pipe-Exhaust |
| 20 | 130-2585 | 1 | Coupler-Flywheel |
| 21 | 130-9095 | 1 | Cover-Flywheel |
| 22 | 139-1027 | 1 | Plate-Retention, Harness |
| 23 | 3234-29 | 2 | Screw-HHF |
| 24 | 3229-11 | 2 | Screw-CARR |
| 25 | 139-1026 | 2 | Plate-Retention, Harness |
| 26 | 32180-031 | 2 | Clip-Tree (W/Tie) |
| 27 | 104-8300 | 2 | Nut-HF, NI |
| 28 | 33015-00 | 4 | Nut-Hex |
| 29 | 33095-00 | 4 | Washer-Flat |
| 30 | 33105-025 | 30 | Screw-HHF |
| 33 | 137-5505-0P | 1 | Mount-Shield |
| 34 | 137-5506-0P | 1 | Shield-Starter |
| 35 | 33105-020 | 2 | Screw-HHF |
| 36 | 3290-199 | 2 | Nut-Speed |
| 37 | 99-6810 | 2 | Screw-HHF |
| 43 | 33115-020 | 8 | Screw-HH |

# Alternator Assembly

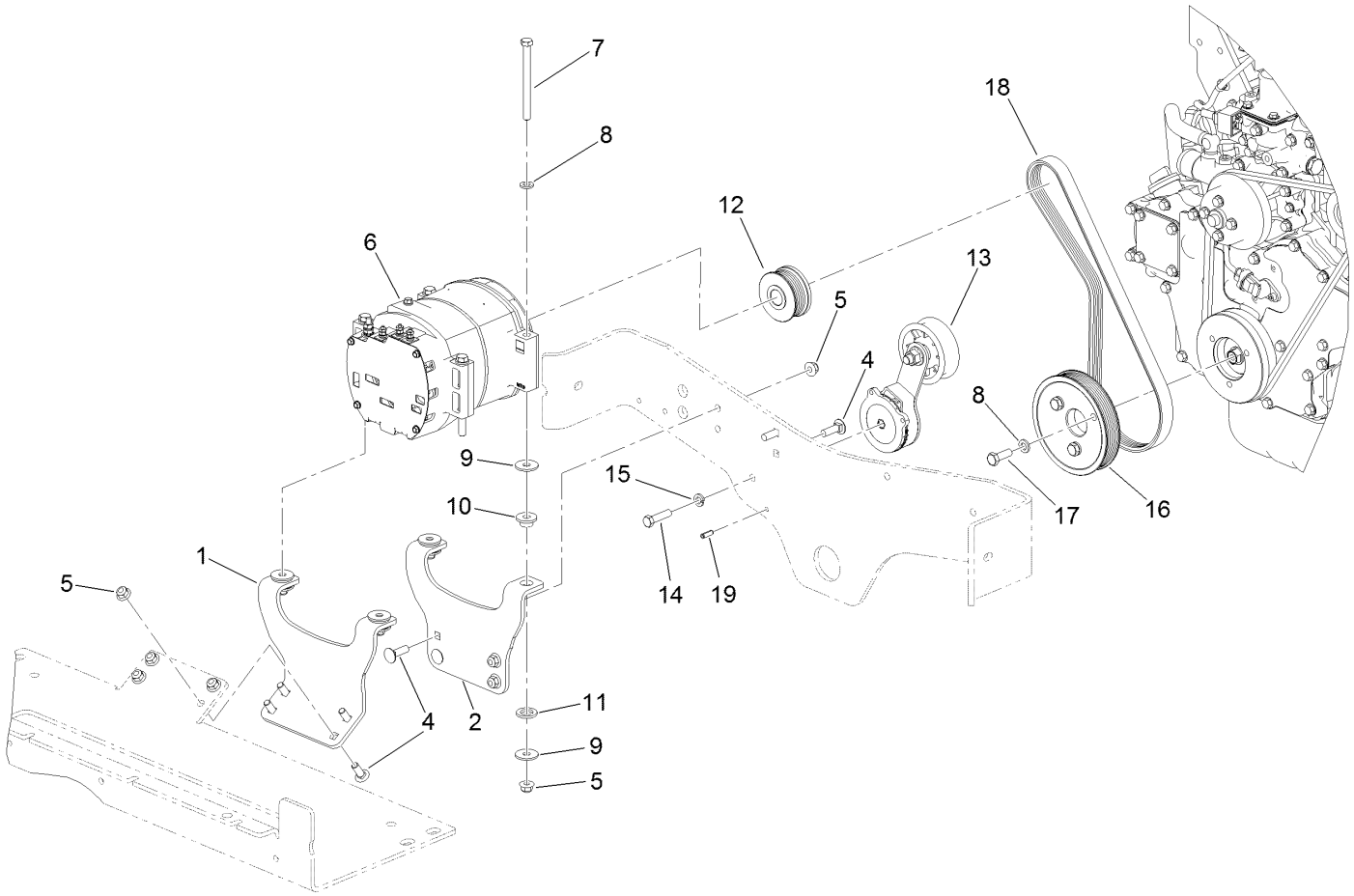

# Alternator Assembly (continued)

| Ref. | Part Number | Qty. | Description |
|---|---|---|---|
| 1 | 139-7797-0P | 1 | Mount-Alternator, Rear |
| 2 | 139-7796-0P | 1 | Mount-Alternator, Front |
| 4 | 3231-25 | 8 | Bolt-CARR |
| 5 | 104-8301 | 12 | Nut-HF, NI |
| 6 | 130-2491 | 1 | Alternator-24V |
| 7 | 323-23 | 4 | Screw-HH |
| 8 | 107-1413 | 7 | Washer-Hardened |
| 9 | 93-8806 | 8 | Washer-Hardened |
| 10 | 131-2313 | 4 | Bushing-Alternator |
| 11 | 131-2315 | 4 | Washer-Delrin |
| 12 | 130-9162 | 1 | Pulley |
| 13 | 130-2454 | 1 | Tensioner |
| 14 | 323-8 | 1 | Screw-HH |
| 15 | 3253-5 | 1 | Washer-Lock |
| 16 | 130-2403 | 1 | Pulley |
| 17 | 33115-030 | 3 | Screw-HH |
| 18 | 130-9165 | 1 | Belt |
| 19 | 32121-11 | 1 | Pin-Roll |

# Hydraulic Cooling Assembly

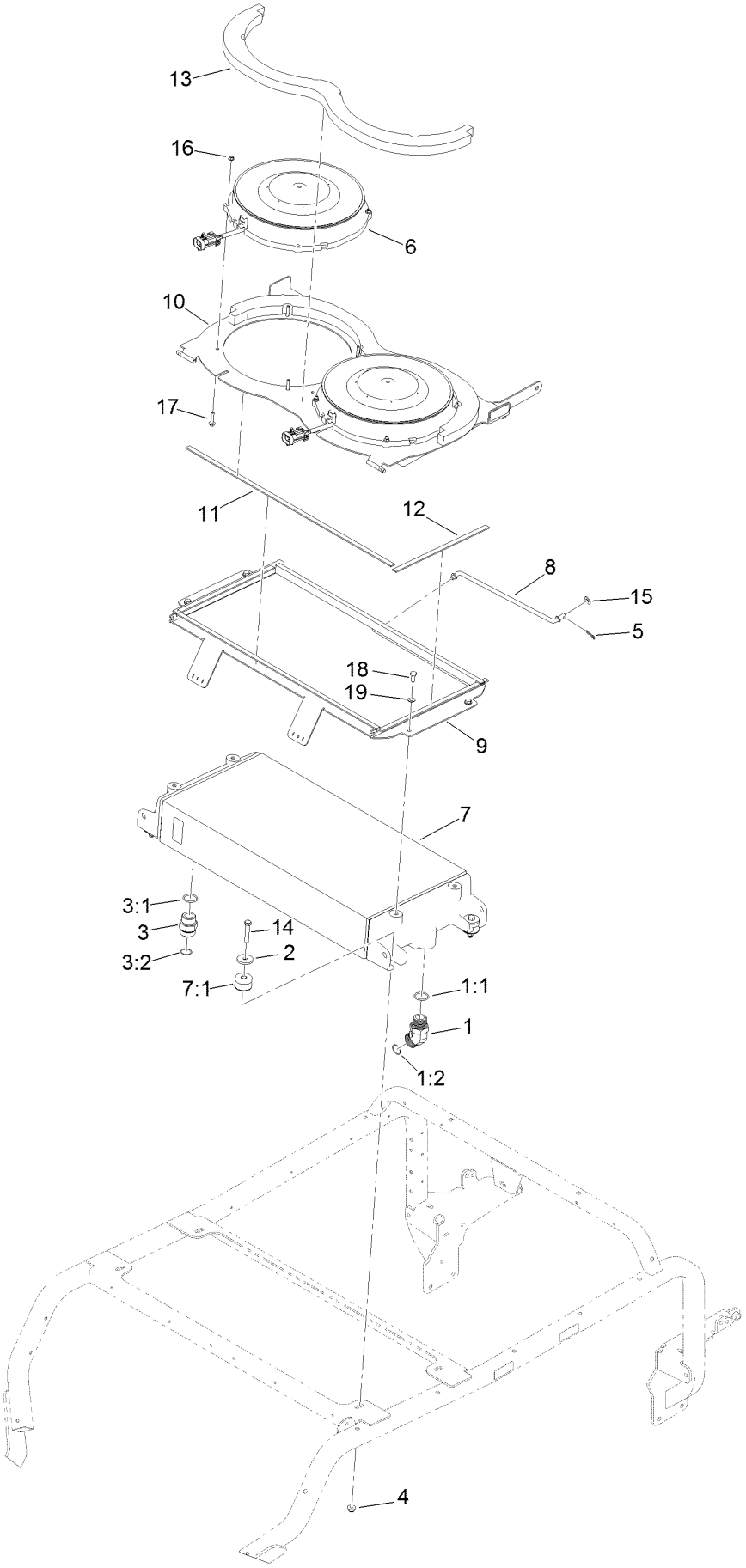

# Hydraulic Cooling Assembly (continued)

| Ref. | Part Number | Qty. | Description |
|---|---|---|---|
| 1 | 104-3509 | 1 | Fitting-HYD, 45 DEG |
| 1:1 | 237-146 | 1 | O-Ring |
| 1:2 | 340-65 | 1 | O-Ring |
| 2 | 114-2120 | 4 | Washer |
| 3 | 104-3797 | 1 | Fitting-Straight |
| 3:1 | 237-146 | 1 | O-Ring |
| 3:2 | 340-65 | 1 | O-Ring |
| 4 | 104-8301 | 4 | Nut-HF, NI |
| 5 | 119-1415 | 1 | Pin-Cotter, Locking |
| 6 | 130-2531 | 2 | Fan |
| 7 | 130-2573 | 1 | Oil Cooler ASM |
| 7:1 | 132-1361 | 4 | Mount-Isolator |

| Ref. | Part Number | Qty. | Description |
|---|---|---|---|
| 8 | 130-9170 | 1 | Rod-Prop, Cooler |
| 9 | 130-9171-0P | 1 | Plate-Seal, Cooler |
| 10 | 132-1385 | 1 | Cooler Top ASM |
| 11 | 130-9173 | 2 | Foam-Cooler, Long |
| 12 | 130-9174 | 2 | Foam-Cooler, Short |
| 13 | 130-9175 | 2 | Foam-Cooler, Top |
| 14 | 323-10 | 4 | Screw-HH |
| 15 | 3256-24 | 1 | Washer-Plain |
| 16 | 104-7201 | 8 | Nut-HF, NI |
| 17 | 3234-21 | 8 | Screw-HHF |
| 18 | 3210-2 | 4 | Screw-HH |
| 19 | 3256-23 | 4 | Washer-Plain |

# Radiator and Cooling Fan Assembly

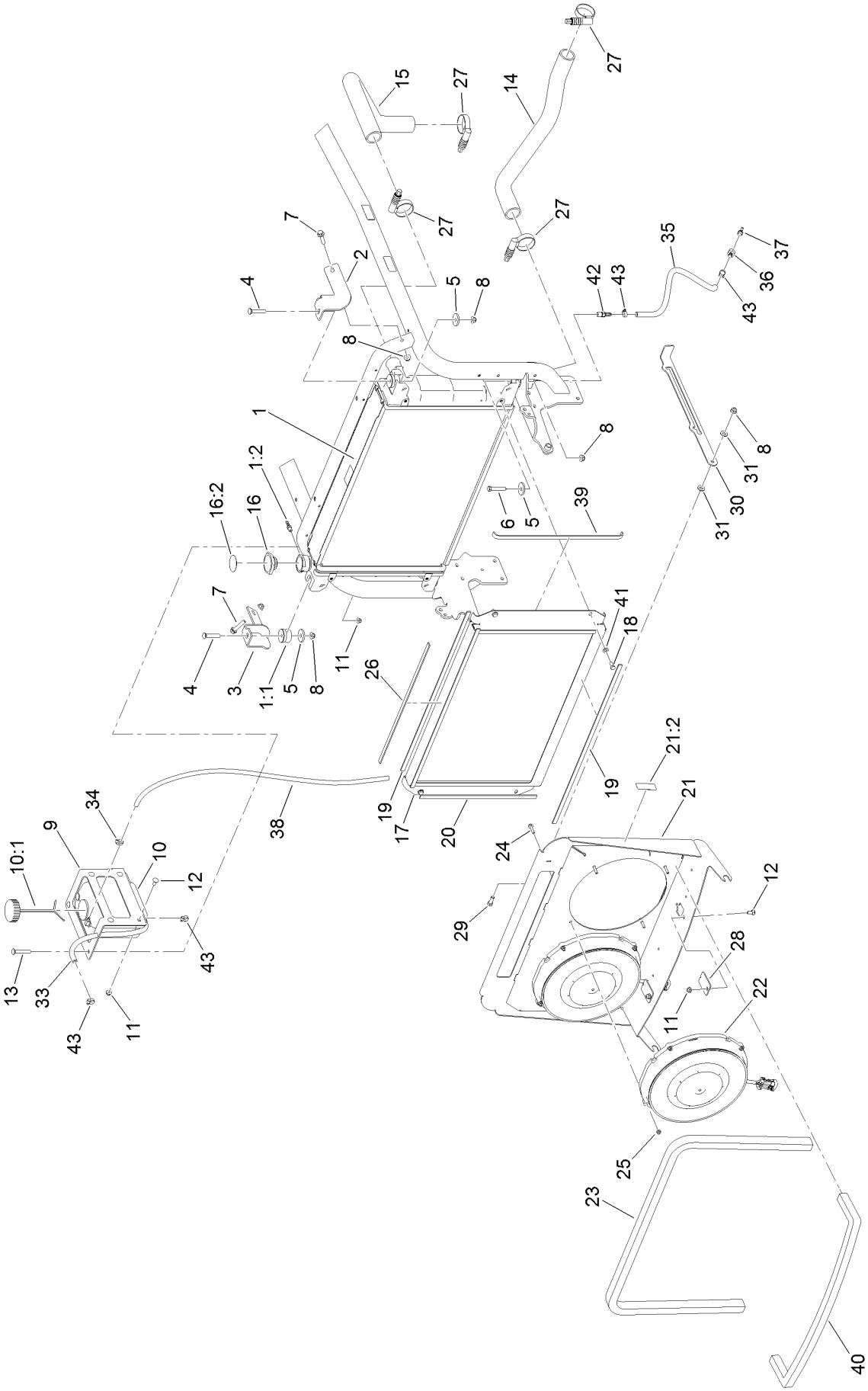

# Radiator and Cooling Fan Assembly (continued)

| Ref. | Part Number | Qty. | Description |
|---|---|---|---|
| 1 | 130-2572 | 1 | Radiator ASM |
| 1:1 | 132-1361 | 4 | Mount-Isolator |
| 1:2 | 94-7220 | 1 | Fitting-Barb, Hose |
| 2 | 127-3638-0P | 1 | Bracket-Mount, RH Radiator |
| 3 | 127-3631-0P | 1 | Bracket-Mount, LH Radiator |
| 4 | 3231-6 | 2 | Screw-CARR |
| 5 | 114-2120 | 4 | Washer |
| 6 | 323-10 | 2 | Screw-HH |
| 7 | 3234-19 | 2 | Screw-HHF |
| 8 | 104-8301 | 7 | Nut-HF, NI |
| 9 | 130-2592-0P | 1 | Bracket-Tank, Radiator Overflow |
| 10 | 120-5571 | 1 | Coolant Reservoir ASM |
| 10:1 | 87-7050 | 1 | Cap-Reservoir |
| 11 | 104-8300 | 8 | Nut-HF, NI |
| 12 | 3230-1 | 6 | Bolt-CARR |
| 13 | 3230-7 | 2 | Bolt-CARR |
| 14 | 130-9159 | 1 | Hose-Radiator, Lower |
| 15 | 127-3616 | 1 | Hose-Radiator, Upper |
| 16 | 131-2356 | 1 | Radiator Cap ASM |
| 16:2 | 117-3276 | 1 | Decal-Danger |
| 17 | 130-9185-0P | 1 | Plate-Seal, Radiator |
| 18 | 3210-3 | 4 | Screw-HH |
| 19 | 130-9181 | 4 | Foam-Radiator, Long |
| 20 | 130-9182 | 2 | Foam-Radiator, Short |
| 21 | 132-1386 | 1 | Fan Shroud ASM |
| 21:2 | 117-4766 | 2 | Decal-Warning, Fan |
| 22 | 130-2531 | 2 | Fan |
| 23 | 132-1347 | 1 | Radiator Foam ASM |
| 24 | 3234-21 | 8 | Screw-HHF |
| 25 | 104-7201 | 8 | Nut-HF, NI |
| 26 | 130-9183 | 1 | Foam-Radiator, Top |
| 27 | 121-7536 | 4 | Clamp-Torque, Constant |
| 28 | 130-9020 | 2 | Plate-Cover |
| 29 | 323-6 | 1 | Screw-HH |
| 30 | 130-9021-0P | 1 | Rod-Prop, Radiator |
| 31 | 66-2920 | 2 | Washer-Friction |
| 33 | 110-4109 | 1 | Hose-Fuel |
| 34 | 2412-108 | 1 | Clamp-Worm |
| 35 | 116-5087 | 1 | Hose-Fuel |
| 36 | 354-94 | 1 | Fitting-Female, Barbed |
| 37 | 93-5528 | 1 | Fitting-Cock, Drain |
| 38 | 115-2370 | 1 | Hose-Fuel |
| 39 | 131-2289 | 2 | Foam-Radiator |
| 40 | 131-2322 | 1 | Foam-Shroud, Lower |
| 41 | 3256-23 | 4 | Washer-Plain |
| 42 | 108-0342 | 1 | Fitting-Straight |
| 43 | 2412-36 | 4 | Clamp-Hose |

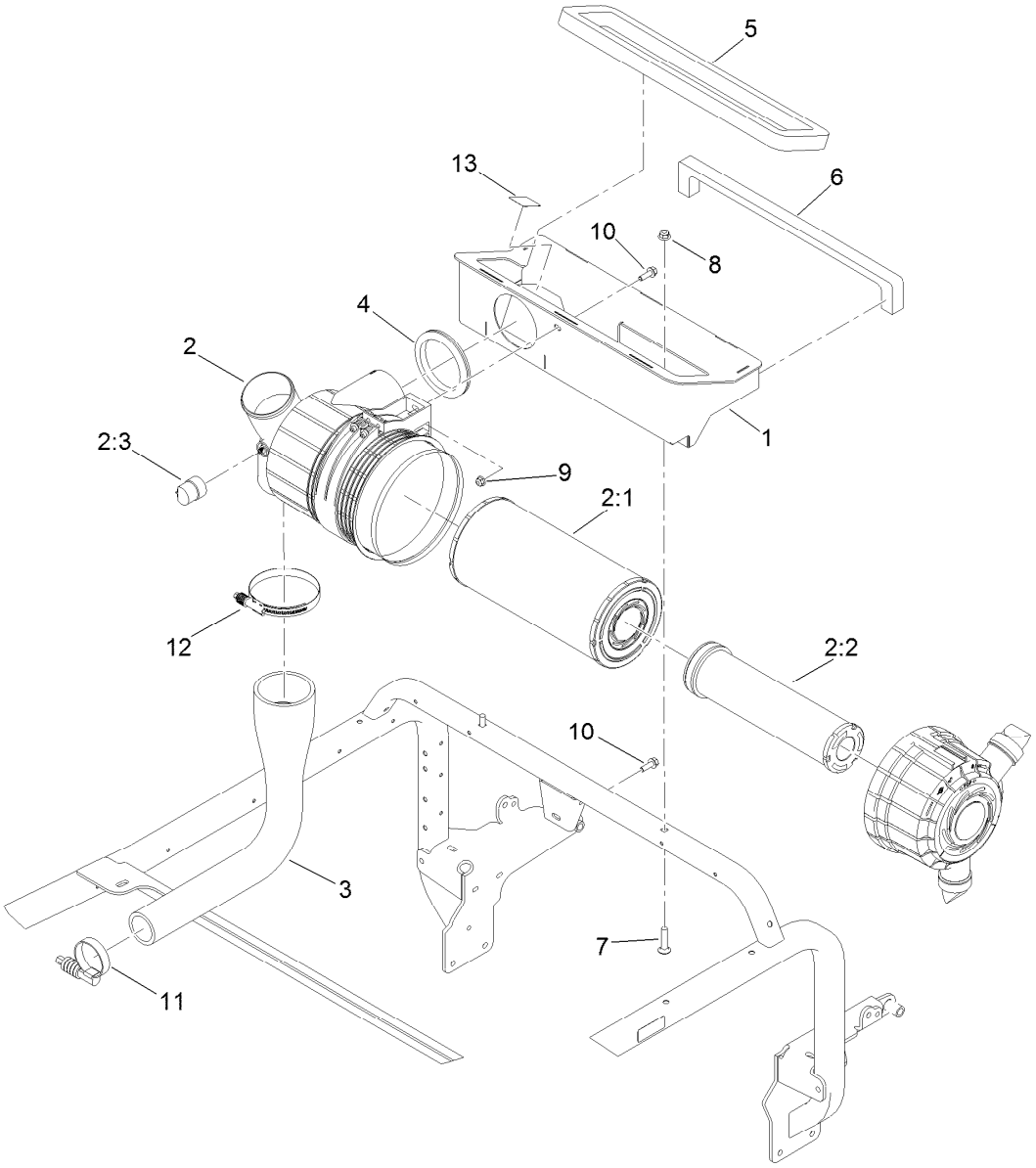


# Air Cleaner Assembly

| Ref. | Part Number | Qty. | Description |
|---|---|---|---|
| 1 | 130-9176-0P | 1 | Airbox |
| 2 | 130-9160 | 1 | Air Filter ASM |
| 2:1 | 108-3815 | 1 | Filter-Air |
| 2:2 | 130-9070 | 1 | Element-Filter, Safety |
| 2:3 | 69-1940 | 1 | Indicator-Electrical |
| 3 | 130-2512 | 1 | Hose-Intake, Air |
| 4 | 130-2579 | 1 | Grommet |
| 5 | 130-9179 | 1 | Foam-Airbox |

| Ref. | Part Number | Qty. | Description |
|---|---|---|---|
| 6 | 130-9180 | 1 | Foam-Airbox, Rear |
| 7 | 3231-5 | 2 | Screw-CARR |
| 8 | 104-8301 | 2 | Nut-HF, NI |
| 9 | 104-8300 | 2 | Nut-HF, NI |
| 10 | 3234-29 | 2 | Screw-HHF |
| 11 | AU110569 | 1 | Clamp-Torque, Constant |
| 12 | 131-2229 | 1 | Clamp-Hose |
| 13 | 115-8155 | 1 | Decal-Warning |

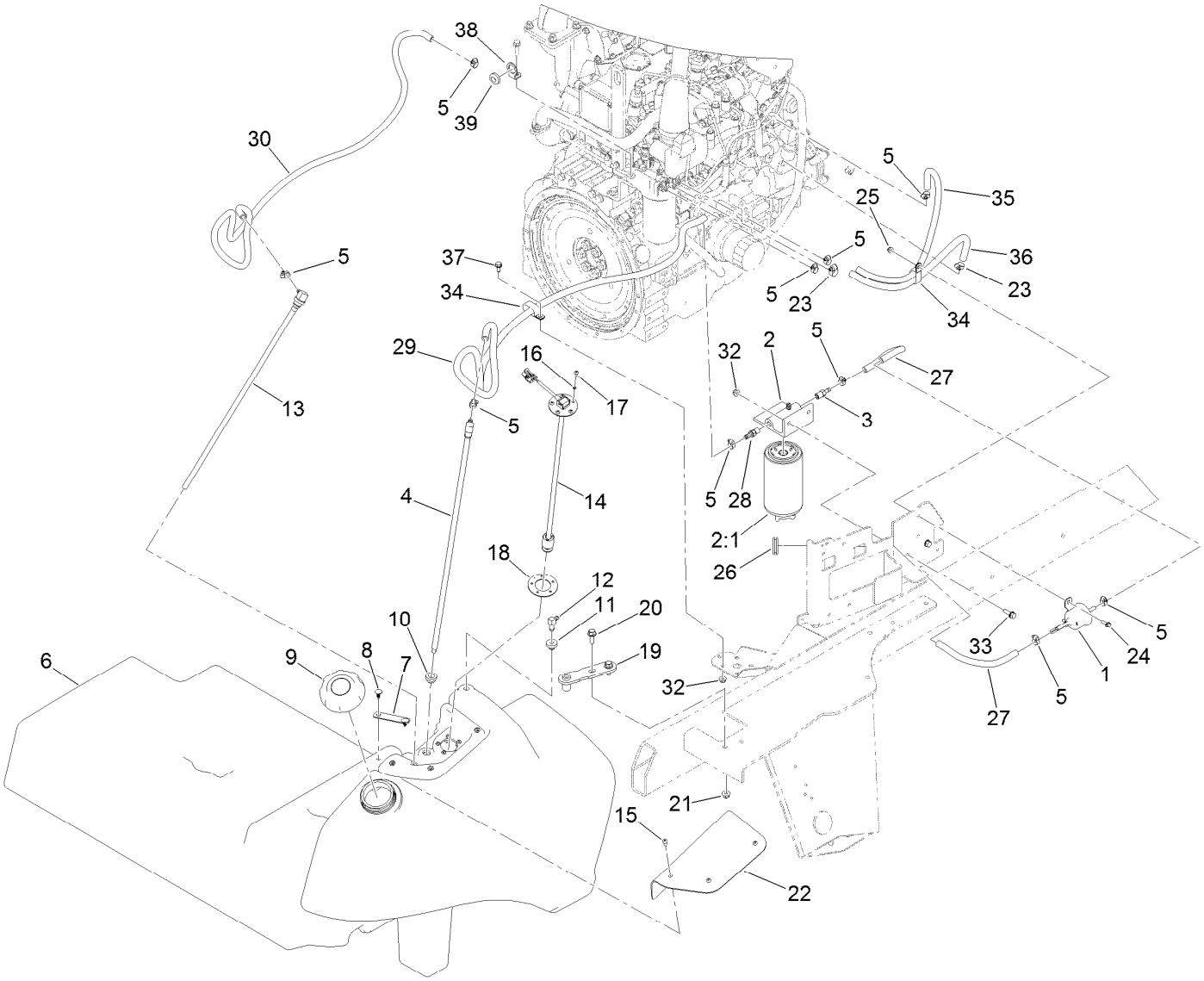


# Fuel System Assembly

| Ref. | Part Number | Qty. | Description |
|---|---|---|---|
| 1 | 121-5613 | 1 | Pump-Fuel, Electric |
| 2 | 125-2914 | 1 | Filter-Separator |
| 2:1 | 125-2915 | 1 | Filter-Fuel/Water Separator |
| 3 | 353-783 | 1 | Fitting-STR |
| 4 | 119-7748 | 1 | Pipe-Stand, Fuel |
| 5 | 2412-108 | 8 | Clamp-Worm |
| 6 | 131-2284 | 1 | Fuel Tank ASM |
| 7 | 94-6821 | 2 | Clamp-Wire |
| 8 | 117-2382 | 4 | Plug-Plastic |
| 9 | 125-9171 | 1 | Cap-Fuel |
| 10 | 104-0790 | 2 | Bushing |
| 11 | 46-6560 | 1 | Bushing |
| 12 | 46-6550 | 1 | Fitting-Elbow, 90 DEG |
| 13 | 130-9149 | 1 | Pipe-Stand, Return |
| 14 | 121-1688 | 1 | Gauge-Fuel |
| 15 | 3274-31 | 3 | Screw-HSBH |
| 16 | 3253-15 | 5 | Washer-Lock |
| 17 | 32122-24 | 5 | Screw-PTH |
| 18 | 121-1707 | 1 | Gasket-Fuel, Viton |
| 19 | 114-0094 | 1 | Hold Down-Tank |

| Ref. | Part Number | Qty. | Description |
|---|---|---|---|
| 20 | 3234-42 | 2 | Screw-HHF |
| 21 | 104-8301 | 2 | Nut-HF, NI |
| 22 | 114-4939-03 | 1 | Cover-Fitting, Fuel |
| 23 | 2412-36 | 4 | Clamp-Hose |
| 24 | 3234-4 | 2 | Screw-HHF |
| 25 | 104-7201 | 2 | Nut-HF, NI |
| 26 | 1-543286 | 1 | Grommet |
| 27 | 130-9191 | 2 | Hose-Fuel |
| 28 | 108-0342 | 1 | Fitting-Straight |
| 29 | 130-9143 | 1 | Hose-Fuel |
| 30 | 108-3282 | 1 | Hose-Fuel |
| 32 | 104-8300 | 3 | Nut-HF, NI |
| 33 | 3234-29 | 2 | Screw-HHF |
| 34 | 120-1959 | 2 | Clamp |
| 35 | 109-0308 | 1 | Hose-Fuel |
| 36 | 114-0832 | 1 | Hose-Fuel |
| 37 | 3234-7 | 1 | Screw-HHF |
| 38 | 132-1329 | 1 | Bracket-Hose Retainer |
| 39 | 237-124 | 1 | Grommet |

# Traction Hydraulic Assembly

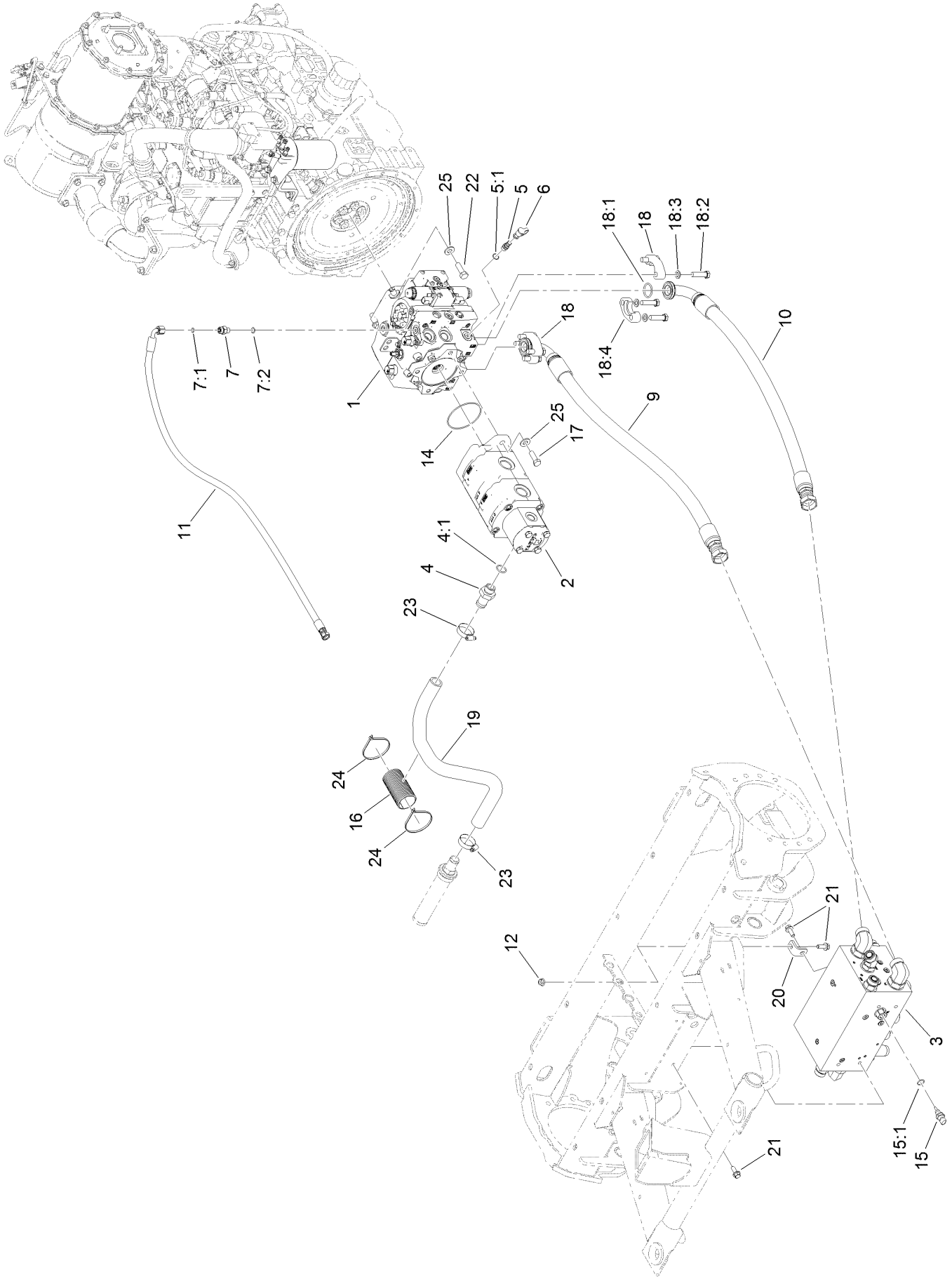

# Traction Hydraulic Assembly (continued)

| Ref. | Part Number | Qty. | Description |
|---|---|---|---|
| 1 | 130-9150 | 1 | Hydraulic Piston Pump ASM |
| 2 | 130-2520 | 1 | Hydraulic Triple Gear Pump ASM |
| 3 | | 1 | Manifold-Traction ● |
| 4 | 99-3017 | 1 | Fitting |
| 4:1 | 237-81 | 1 | O-Ring |
| 5 | 59-7410 | 3 | Fitting-Diagnostic |
| 5:1 | 237-42 | 1 | O-Ring |
| 6 | 354-79 | 3 | Cap-Dust |
| 7 | 340-2 | 1 | Fitting-Straight |
| 7:1 | 237-22 | 1 | O-Ring |
| 7:2 | 237-42 | 1 | O-Ring |
| 9 | 127-3450 | 1 | Hydraulic Hose ASM |
| 10 | 127-3451 | 1 | Hydraulic Hose ASM |
| 11 | 127-3521 | 1 | Hydraulic Hose ASM |
| 12 | 104-8301 | 1 | Nut-HF, NI |
| 14 | 107-9447 | 1 | O-Ring |
| 15 | 110-8829 | 1 | Sender-Temperature |
| 15:1 | 237-42 | 1 | O-Ring |
| 16 | 115-5523 | 1 | Guard-Hose |
| 17 | 121-1525 | 2 | Screw-HH |
| 18 | 121-3903 | 2 | Flange Kit |
| 18:1 | 121-3904 | 1 | O-Ring |
| 18:2 | 33116-045 | 4 | Screw-HH |
| 18:3 | 100-7336 | 4 | Washer |
| 18:4 | | 2 | Flange ● |
| 19 | 130-2550 | 1 | Hose-Suction |
| 20 | 130-2571 | 1 | Tab-Mount, Manifold |
| 21 | 131-2220 | 6 | Screw-HHF |
| 22 | AU426-824 | 4 | Screw-HH |
| 23 | 2412-111 | 2 | Clamp-Hose, W/Liner |
| 24 | 3290-379 | 2 | Tie-Cable |
| 25 | 87-7270 | 6 | Washer-Thrust |

● Not serviced separately

# Piston Pump Assembly No. 130-9150

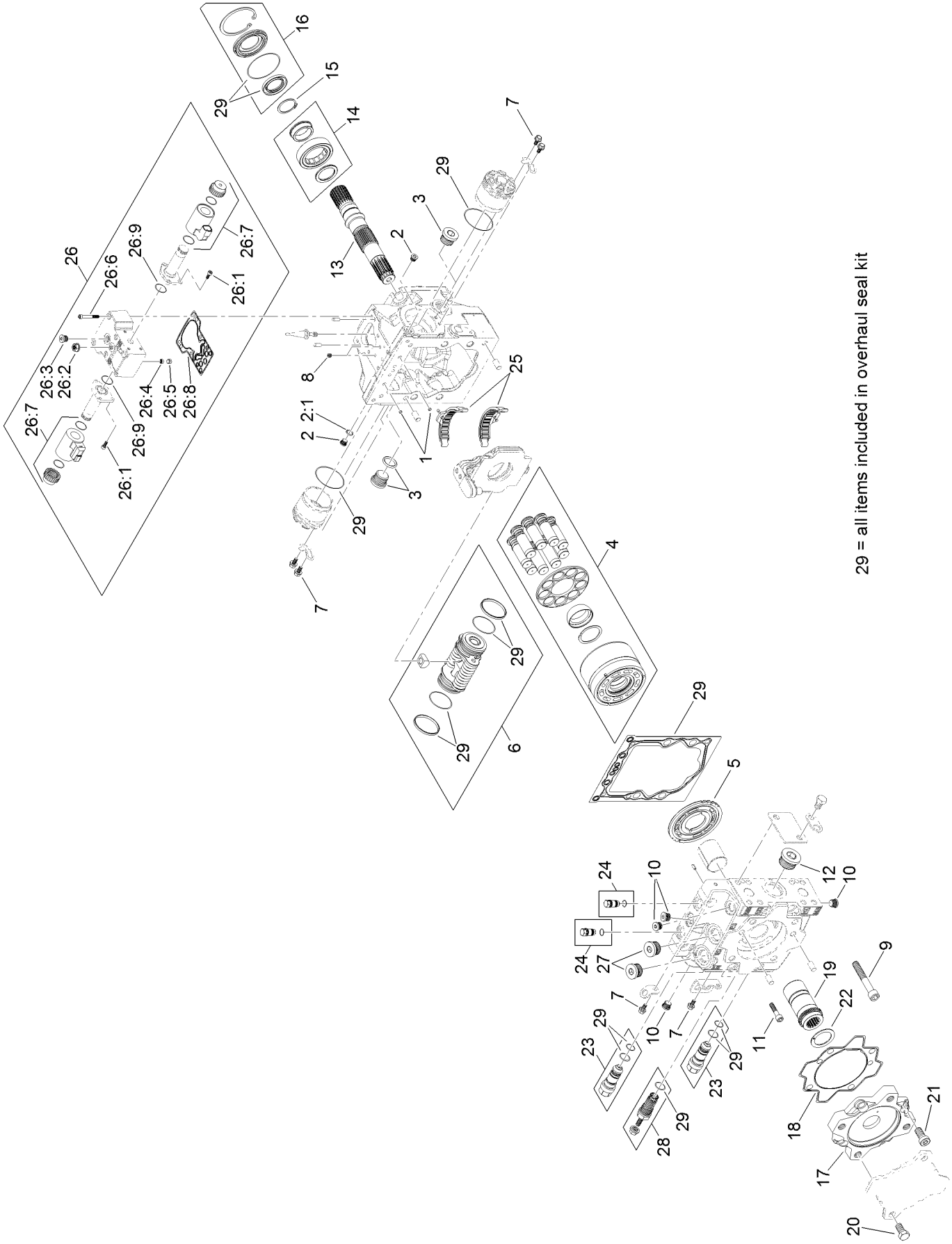

# Piston Pump Assembly No. 130-9150 (continued)

| Ref. | Part Number | Qty. | Description |
|---|---|---|---|
| 1 | 125-5266 | 2 | Screen |
| 2 | 75-0170 | 2 | Plug-Thread, Straight |
| 2:1 | 92-8777 | 1 | O-Ring |
| 3 | 69-3130 | 2 | Plug |
| 4 | 125-5267 | 1 | Cylinder Block Kit |
| 5 | 125-5268 | 1 | Valve Plate, CW |
| 6 | 125-5271 | 1 | Servo Piston ASM |
| 7 | 125-5270 | 8 | Screw |
| 8 | 125-5276 | 2 | Orifice (0.8) |
| 9 | 125-5277 | 4 | Screw |
| 10 | 125-5300 | 4 | Plug ASM |
| 11 | 125-5275 | 2 | Screw |
| 12 | 125-5301 | 1 | Plug |
| 13 | 125-5278 | 1 | Shaft |
| 14 | 125-5279 | 1 | Bearing-Roller |
| 15 | 125-5280 | 1 | Ring-Retaining |
| 16 | 125-5296 | 1 | Shaft Seal Kit |
| 17 | 125-5284 | 1 | Adapter |
| 18 | 125-5285 | 1 | Seal-Adapter |
| 19 | 125-5286 | 1 | Coupling |
| 20 | 125-5281 | 4 | Screw |
| 21 | 125-5282 | 4 | Screw |
| 22 | 125-5287 | 1 | Plate-Thrust |
| 23 | 125-5291 | 2 | Valve-Relief, High Pressure |
| 24 | 125-5292 | 2 | Pressure Limiter Plug ASM |
| 25 | 125-5293 | 1 | Swashplate Bearing Kit |
| 26 | 125-5295 | 1 | Control Kit (12 Volt) |
| 26:1 | 125-5272 | 6 | Screw |
| 26:2 | 125-5273 | 1 | Nut-Seal |
| 26:3 | 125-5302 | 1 | Plug |
| 26:4 | 125-5266 | 1 | Screen |
| 26:5 | 125-5269 | 1 | Ring-Locking |
| 26:6 | 125-5274 | 6 | Screw |
| 26:7 | 125-5294 | 2 | Coil Kit |
| 26:8 | 125-5283 | 1 | Gasket-Control |
| 26:9 | 125-5288 | 2 | O-Ring |
| 27 | 125-5303 | 2 | Plug ASM |
| 28 | 125-5297 | 1 | Charge Relief Kit |
| 29 | 125-5299 | 1 | Overhaul Seal Kit |

# Hydraulic Gear Pump Assembly No. 130-2520

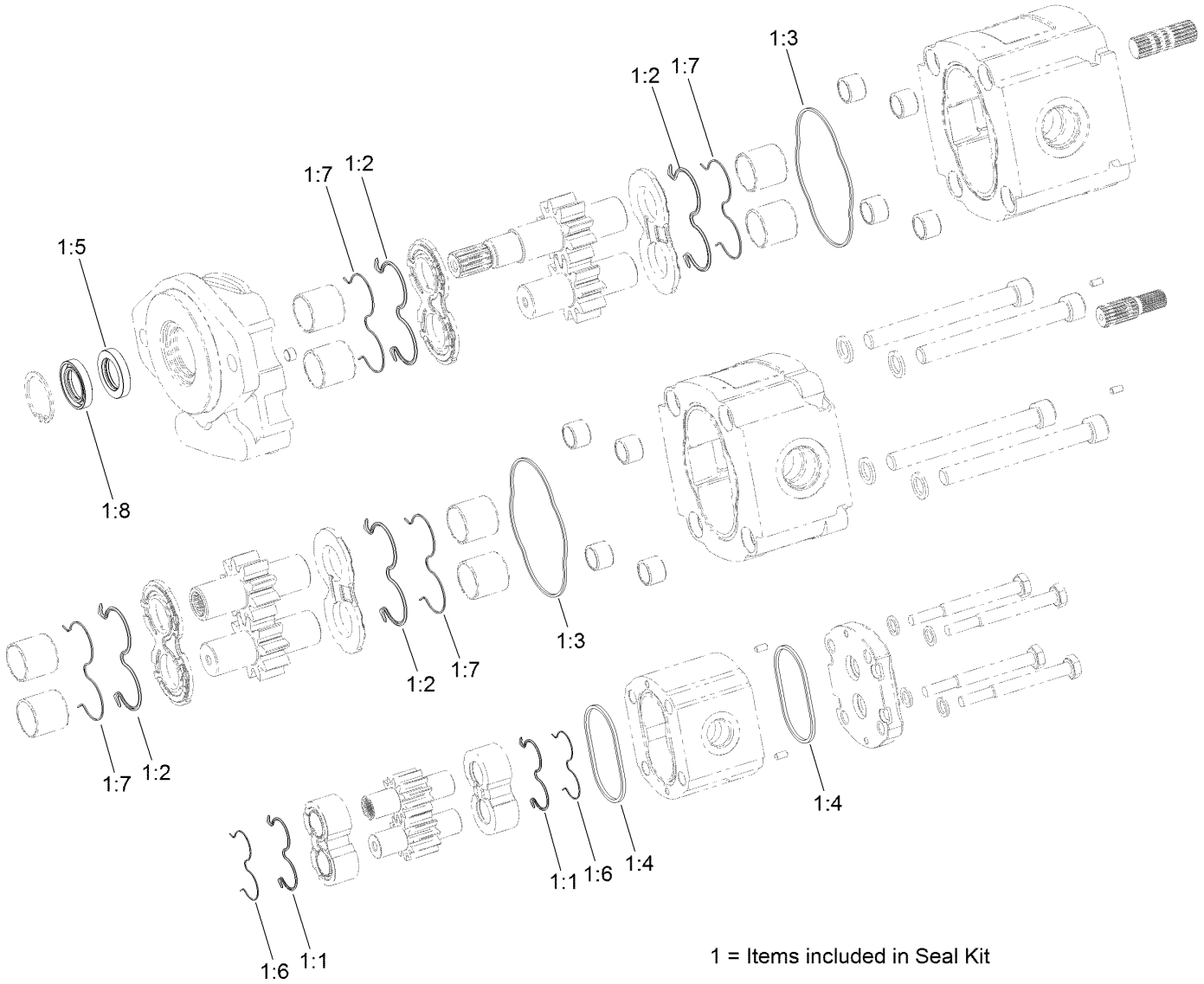


1 = Items included in Seal Kit

# Hydraulic Gear Pump Assembly No. 130-2520 (continued)

| Ref. | Part Number | Qty. | Description |
|---|---|---|---|
| 1 | 133-2484 | 1 | Seal Kit |
| 1:1 | | 2 | Seal ● |
| 1:2 | | 4 | Seal ● |
| 1:3 | | 2 | Seal-Standard ● |
| 1:4 | | 2 | Seal-Standard ● |
| 1:5 | | 1 | Seal-Shaft ● |
| 1:6 | | 2 | Antiextrusion ● |
| 1:7 | | 4 | Ring-Antiextrusion ● |
| 1:8 | | 1 | Seal-Shaft ● |

● Not serviced separately

# Traction Manifold Assembly

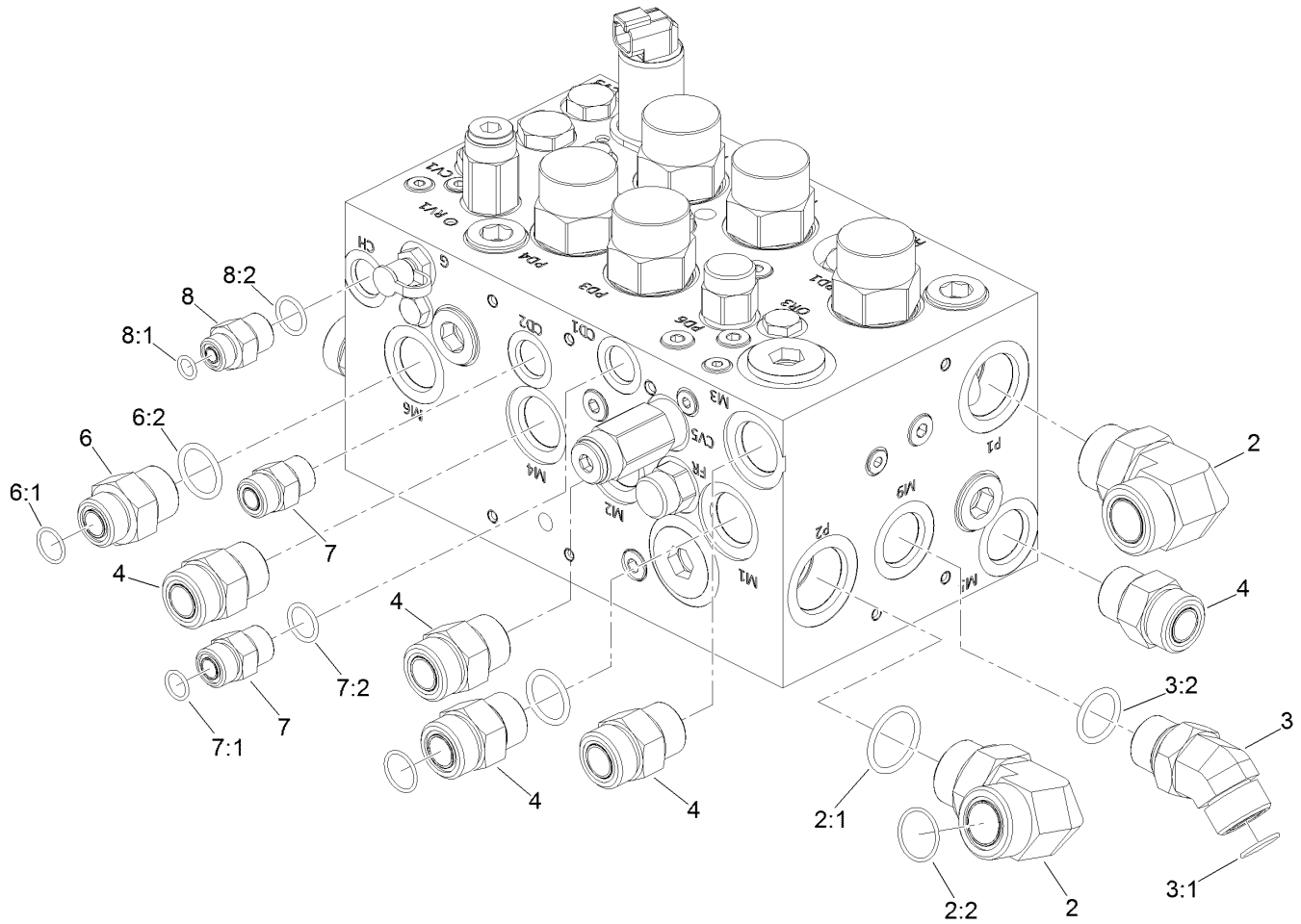


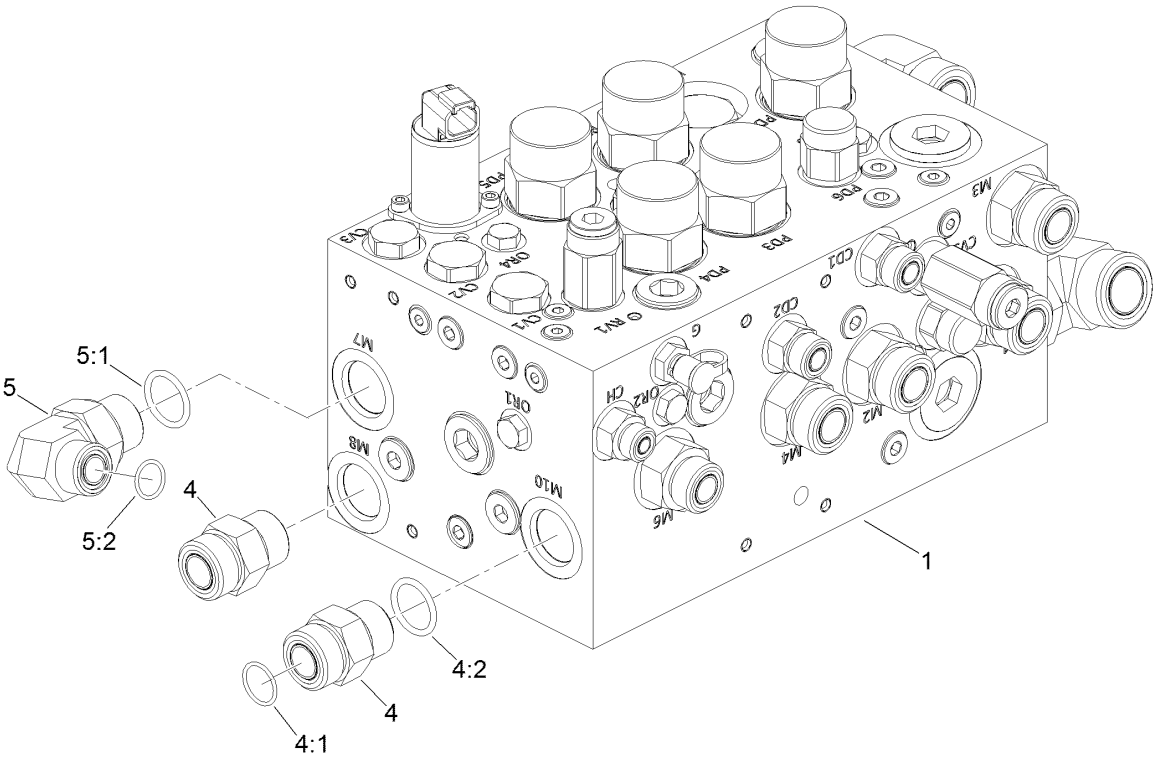

# Traction Manifold Assembly (continued)

| Ref. | Part Number | Qty. | Description |
|---|---|---|---|
| 1 | 137-5623 | 1 | Manifold-Traction |
| 2 | 340-129 | 2 | Fitting-Elbow, 90 DEG |
| 2:1 | 237-146 | 1 | O-Ring |
| 2:2 | 340-65 | 1 | O-Ring |
| 3 | 100-5530 | 1 | Fitting-45 DEG |
| 3:1 | 237-58 | 1 | O-Ring |
| 3:2 | 237-81 | 1 | O-Ring |
| 4 | 340-9 | 7 | Fitting-STR |
| 4:1 | 237-58 | 1 | O-Ring |
| 4:2 | 237-81 | 1 | O-Ring |
| 5 | 340-139 | 1 | Fitting-Elbow 90 |
| 5:1 | 237-81 | 1 | O-Ring |
| 5:2 | 237-65 | 1 | O-Ring |
| 6 | 340-8 | 1 | Fitting-Straight |
| 6:1 | 237-65 | 1 | O-Ring |
| 6:2 | 237-81 | 1 | O-Ring |
| 7 | 340-4 | 2 | Fitting-Straight |
| 7:1 | 237-30 | 1 | O-Ring |
| 7:2 | 237-79 | 1 | O-Ring |
| 8 | 340-3 | 1 | Fitting-Straight |
| 8:1 | 237-22 | 1 | O-Ring |
| 8:2 | 237-79 | 1 | O-Ring |

# Hydraulic Traction Manifold Assembly No. 137-5623

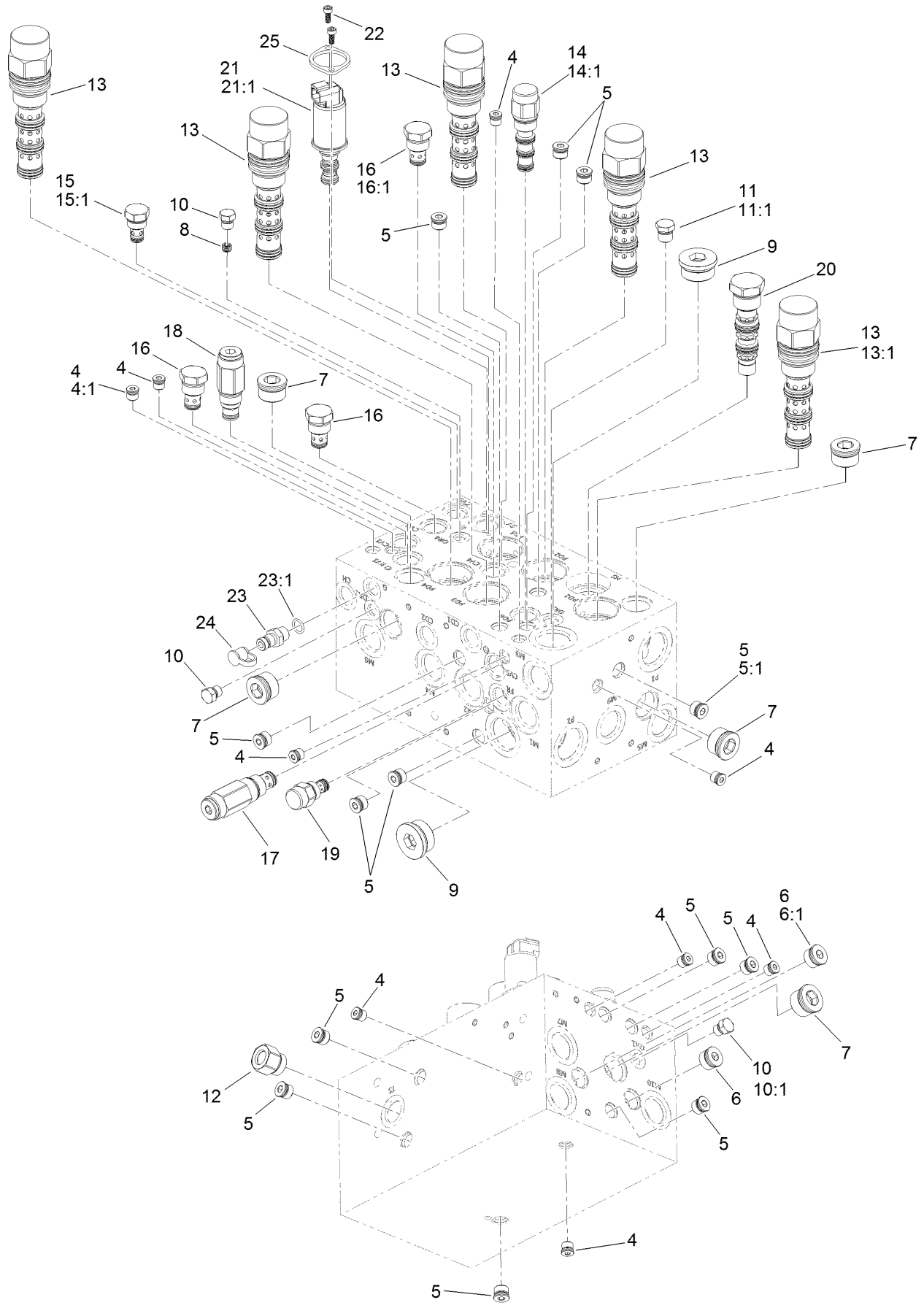

# Hydraulic Traction Manifold Assembly No. 137-5623 (continued)

| Ref. | Part Number | Qty. | Description |
|---|---|---|---|
| 4 | 353-990 | 9 | Plug ASM |
| 4:1 | 237-78 | 1 | O-Ring |
| 5 | 353-989 | 13 | Plug-Hex, Hollow |
| 5:1 | 237-42 | 1 | O-Ring |
| 6 | 353-988 | 2 | Plug-Hex |
| 6:1 | 237-79 | 1 | O-Ring |
| 7 | 133-2444 | 5 | Zero-Leak Plug, SAE-12 |
| 8 | 110-5973 | 1 | Orifice-0.030 |
| 9 | 133-2445 | 2 | Plug-Socket, Hex |
| 10 | 353-512 | 3 | Plug |
| 10:1 | 237-78 | 1 | O-Ring |
| 11 | 353-508 | 1 | Plug-HH |
| 11:1 | 237-42 | 1 | O-Ring |
| 12 | 132-4915 | 1 | Fitting-Adapter, Temp Sensor |
| 13 | 132-4914 | 5 | Valve-Piloted Directional, Vented |
| 13:1 | 137-5511 | 1 | Seal Kit |
| 14 | 132-4913 | 1 | Vent-External, Piloted |
| 14:1 | 110-8908 | 1 | Spool Valve Seal Kit |
| 15 | 105-9321 | 1 | Check Valve ASM |
| 15:1 | 105-9156 | 1 | Seal Kit |
| 16 | 110-8881 | 3 | Valve-Check |
| 16:1 | 105-9159 | 1 | Seal Kit ● |
| 17 | 132-4912 | 1 | Valve-Check |
| 18 | 132-4911 | 1 | Valve-Relief, Poppet Type |
| 19 | 132-4910 | 1 | Regulator-Flow, Pressure Comp |
| 20 | 132-4909 | 1 | Valve-Shuttle, Hot Oil |
| 21 | 138-3828 | 1 | Valve-Solenoid, 3 Way 2 Position |
| 21:1 | 138-3831 | 1 | Seal Kit |
| 22 | 138-3827 | 2 | Screw |
| 23 | 59-7410 | 1 | Fitting-Diagnostic |
| 23:1 | 237-42 | 1 | O-Ring |
| 24 | 354-79 | 1 | Cap-Dust |
| 25 | 138-3825 | 1 | Plate-Mounting, Standard |

● Not illustrated

# Hydraulic Traction Motors Assembly

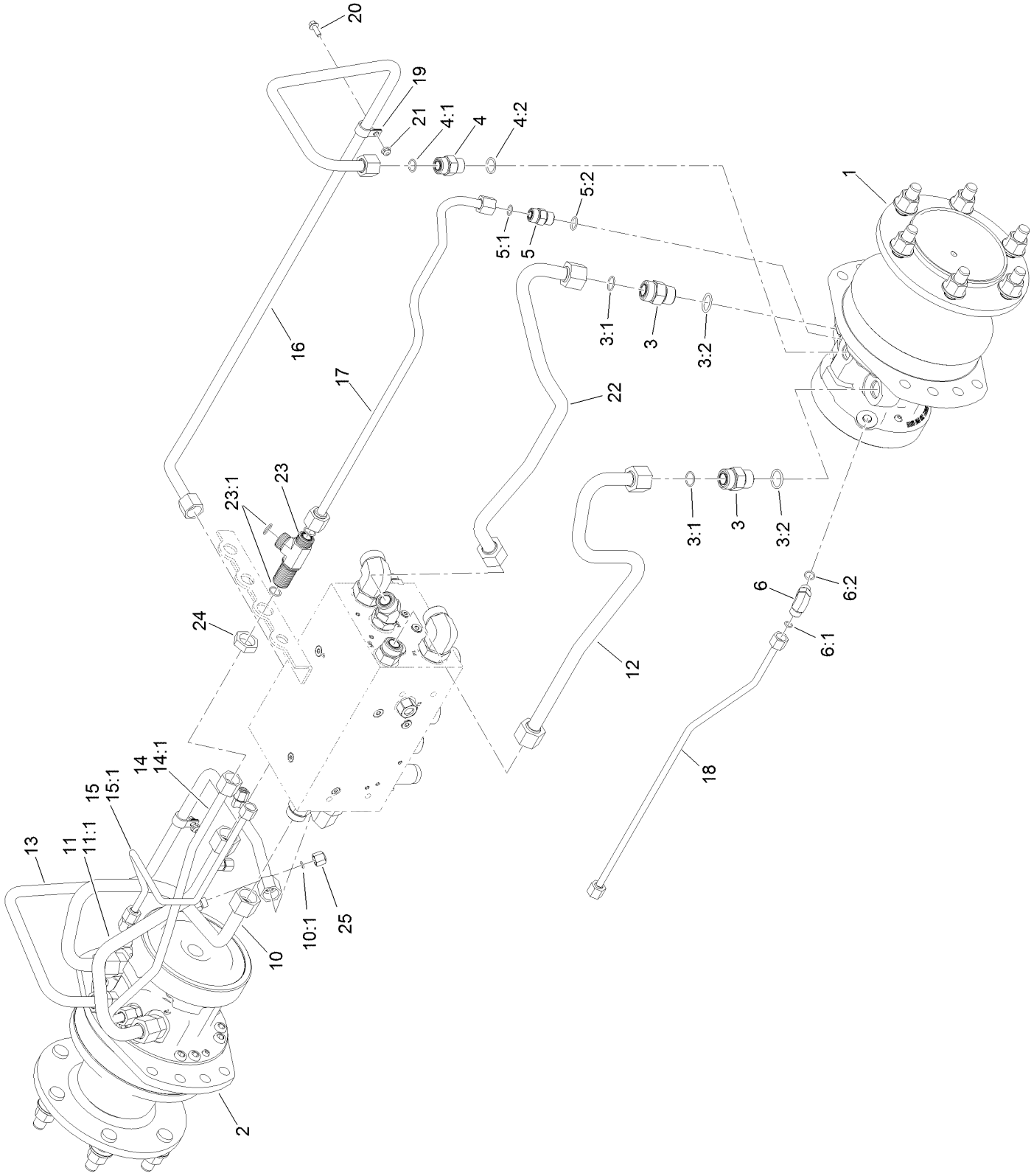

# Hydraulic Traction Motors Assembly (continued)

| Ref. | Part Number | Qty. | Description |
|---|---|---|---|
| 1 | 125-5391 | 1 | LH Hydraulic Motor ASM |
| 2 | 125-5434 | 1 | RH Hydraulic Motor ASM |
| 3 | 340-9 | 4 | Fitting-STR |
| 3:1 | 237-58 | 1 | O-Ring |
| 3:2 | 237-81 | 1 | O-Ring |
| 4 | 340-7 | 2 | Fitting-Straight |
| 4:1 | 237-65 | 1 | O-Ring |
| 4:2 | 237-80 | 1 | O-Ring |
| 5 | 340-4 | 2 | Fitting-Straight |
| 5:1 | 237-30 | 1 | O-Ring |
| 5:2 | 237-79 | 1 | O-Ring |
| 6 | 340-77 | 2 | Fitting-Elbow, 90 DEG |
| 6:1 | 237-22 | 1 | O-Ring |
| 6:2 | 237-42 | 1 | O-Ring |
| 10 | 130-2533 | 1 | Hydraulic Tube ASM |
| 10:1 | 237-21 | 1 | O-Ring |
| 11 | 130-2534 | 1 | Hydraulic Tube ASM |
| 11:1 | 237-21 | 1 | O-Ring |
| 12 | 130-2537 | 1 | Hydraulic Tube ASM |
| 13 | 130-9074 | 1 | Hydraulic Tube ASM |
| 14 | 130-2540 | 1 | Hydraulic Tube ASM |
| 14:1 | 237-30 | 1 | O-Ring |
| 15 | 130-2541 | 1 | Hydraulic Tube ASM |
| 15:1 | 237-22 | 1 | O-Ring |
| 16 | 130-9075 | 1 | Hydraulic Tube ASM |
| 17 | 130-2554 | 1 | Hydraulic Tube ASM |
| 18 | 130-2555 | 1 | Hydraulic Tube ASM |
| 19 | 2412-87 | 2 | Clamp-Cable |
| 20 | 3234-4 | 2 | Screw-HHF |
| 21 | 104-7201 | 2 | Nut-HF, NI |
| 22 | 130-2556 | 1 | Hydraulic Tube ASM |
| 23 | 94-5350 | 1 | Fitting-Tee |
| 23:1 | 237-65 | 3 | O-Ring |
| 24 | 340-74 | 1 | Nut-Lock, Bulkhead |
| 25 | 117-3297 | 3 | Fitting-Cap |

# Hydraulic Motor Assembly No. 125-5391

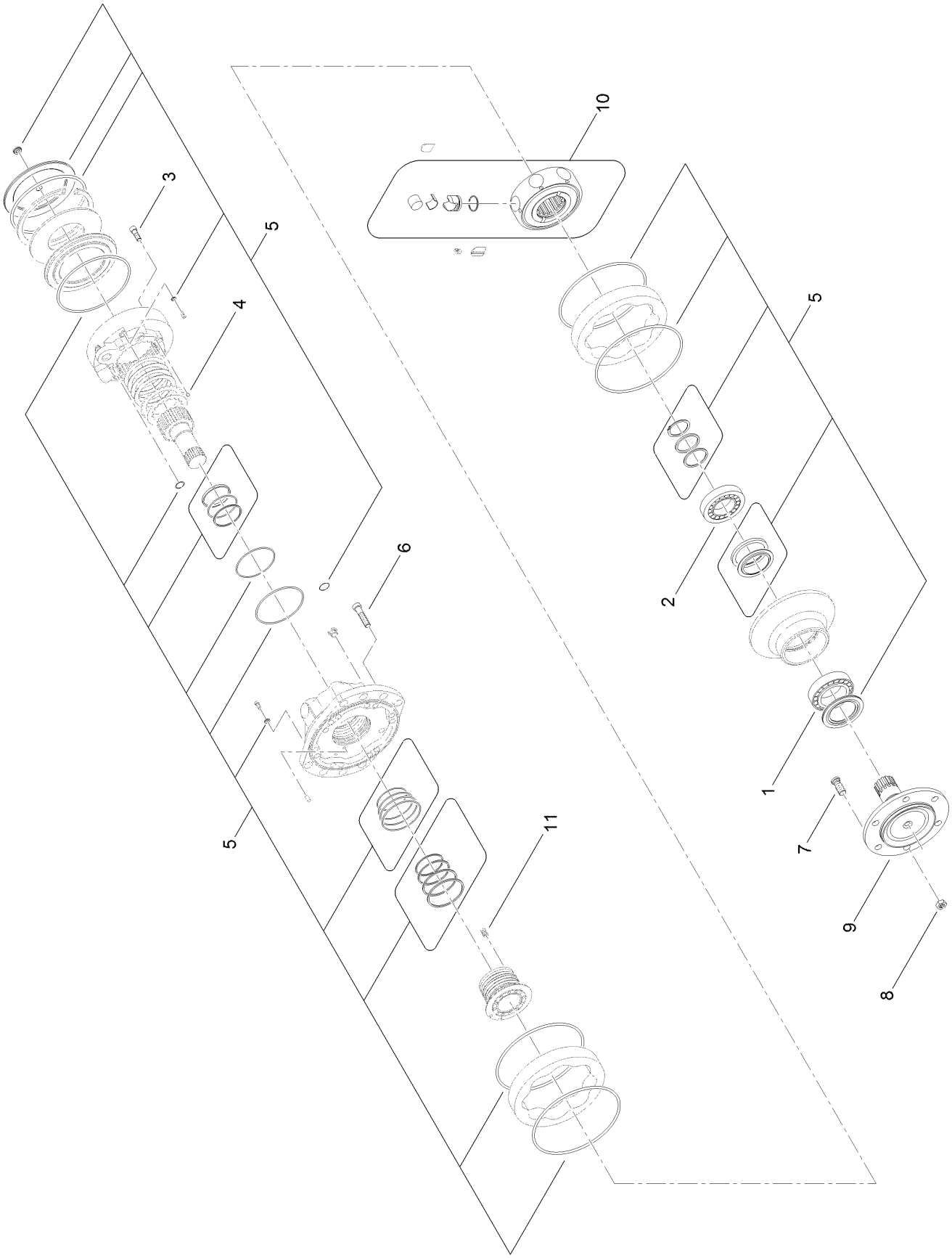

# Hydraulic Motor Assembly No. 125-5391 (continued)

| Ref. | Part Number | Qty. | Description |
|---|---|---|---|
| 1 | 137-5627 | 1 | Bearing |
| 2 | 137-5628 | 1 | Bearing |
| 3 | 137-5649 | 1 | Screw |
| 4 | 137-5629 | 1 | Shear Ball |
| 5 | 137-5630 | 1 | Master Seal Kit |
| 6 | 137-5631 | 1 | Screw |
| 7 | 137-5632 | 1 | Stud |
| 8 | 137-5633 | 1 | Lug Nut |
| 9 | 137-5634 | 1 | Shaft |
| 10 | 137-5578 | 1 | Rotating Group ASM |
| 11 | 137-5583 | 1 | Spring |

# Hydraulic Motor Assembly No. 125-5434

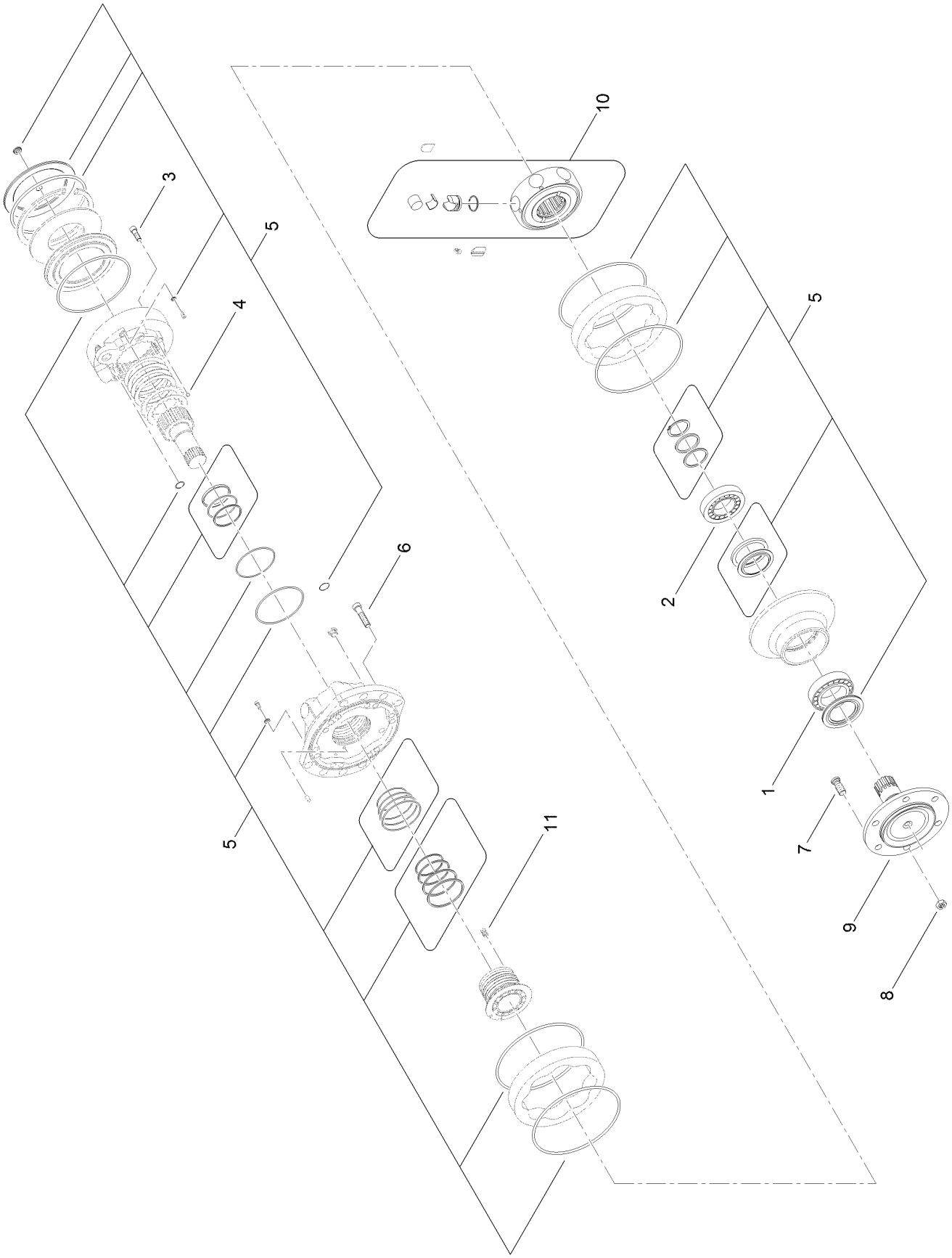

# Hydraulic Motor Assembly No. 125-5434 (continued)

| Ref. | Part Number | Qty. | Description |
|---|---|---|---|
| 1 | 137-5627 | 1 | Bearing |
| 2 | 137-5628 | 1 | Bearing |
| 3 | 137-5649 | 1 | Screw |
| 4 | 137-5629 | 1 | Shear Ball |
| 5 | 137-5630 | 1 | Master Seal Kit |
| 6 | 137-5631 | 1 | Screw |
| 7 | 137-5632 | 1 | Stud |
| 8 | 137-5633 | 1 | Lug Nut |
| 9 | 137-5634 | 1 | Shaft |
| 10 | 137-5578 | 1 | Rotating Group ASM |
| 11 | 137-5583 | 1 | Spring |

# Hydraulic Traction Assembly

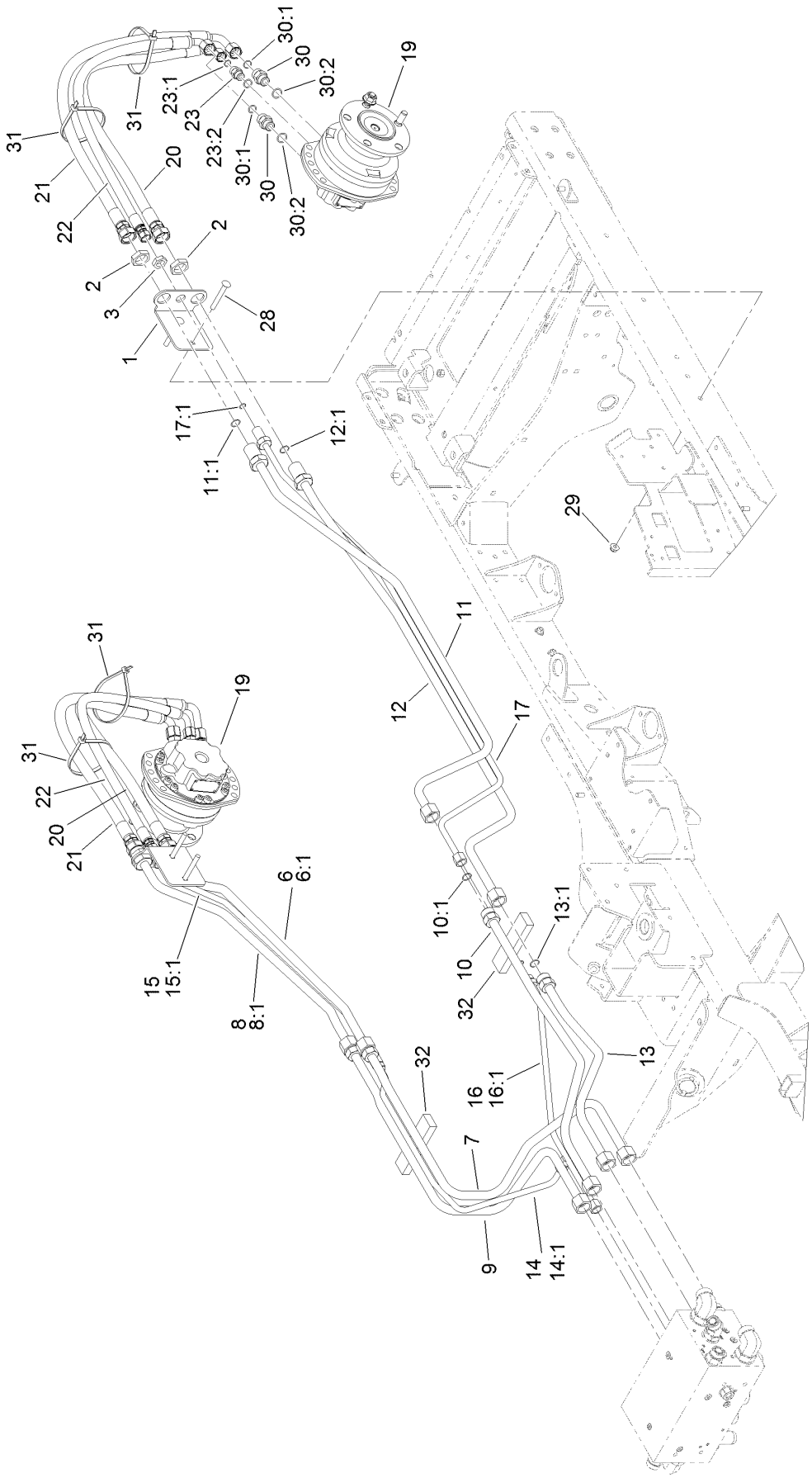

# Hydraulic Traction Assembly (continued)

| Ref. | Part Number | Qty. | Description |
|---|---|---|---|
| 1 | 131-2377-01 | 2 | Support-Bulkhead |
| 2 | 340-126 | 4 | Nut-Bulkhead |
| 3 | 340-127 | 2 | Nut-Bulkhead |
| 6 | 131-2378 | 1 | Hydraulic Tube ASM |
| 6:1 | 237-58 | 1 | O-Ring |
| 7 | 131-2397 | 1 | Hydraulic Tube ASM |
| 8 | 131-2379 | 1 | Hydraulic Tube ASM |
| 8:1 | 237-58 | 1 | O-Ring |
| 9 | 131-2398 | 1 | Hydraulic Tube ASM |
| 10 | 130-2464 | 1 | Hydraulic Tube ASM |
| 10:1 | 237-58 | 1 | O-Ring |
| 11 | 131-2388 | 1 | Hydraulic Tube ASM |
| 11:1 | 237-58 | 1 | O-Ring |
| 12 | 131-2389 | 1 | Hydraulic Tube ASM |
| 12:1 | 237-58 | 1 | O-Ring |
| 13 | 130-2467 | 1 | Hydraulic Tube ASM |
| 13:1 | 237-58 | 1 | O-Ring |
| 14 | 131-2384 | 1 | Hydraulic Tube ASM |
| 14:1 | 237-30 | 1 | O-Ring |
| 15 | 131-2385 | 1 | Hydraulic Tube ASM |
| 15:1 | 237-30 | 1 | O-Ring |
| 16 | 131-2386 | 1 | Hydraulic Tube ASM |
| 16:1 | 237-30 | 2 | O-Ring |
| 17 | 131-2387 | 1 | Hydraulic Tube ASM |
| 17:1 | 237-30 | 1 | O-Ring |
| 19 | 132-1425 | 2 | Hydraulic Motor ASM |
| 20 | 127-3568 | 2 | Hydraulic Hose ASM |
| 21 | 127-3569 | 2 | Hydraulic Hose ASM |
| 22 | 131-2383 | 2 | Hydraulic Hose ASM |
| 23 | 340-4 | 2 | Fitting-Straight |
| 23:1 | 237-30 | 1 | O-Ring |
| 23:2 | 237-79 | 1 | O-Ring |
| 28 | 3231-42 | 4 | Screw-CARR |
| 29 | 104-8301 | 4 | Nut-HF, NI |
| 30 | 340-7 | 4 | Fitting-Straight |
| 30:1 | 237-65 | 1 | O-Ring |
| 30:2 | 237-80 | 1 | O-Ring |
| 31 | 3334-945 | 4 | Tie-Cable |
| 32 | 132-1393 | 2 | Foam-Support, Tube |

# Hydraulic Motor Assembly No. 132-1425

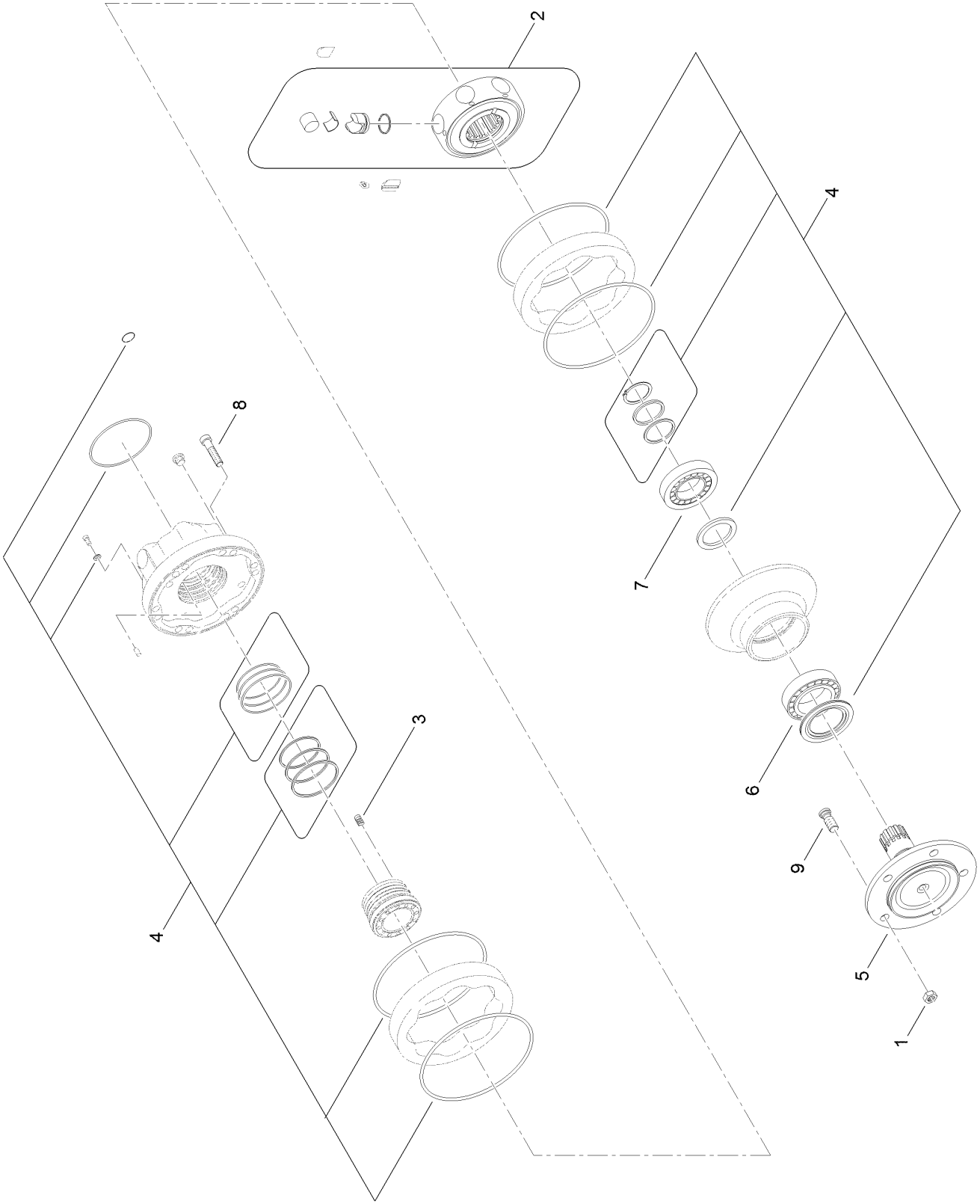

# Hydraulic Motor Assembly No. 132-1425 (continued)

| Ref. | Part Number | Qty. | Description |
|---|---|---|---|
| 1 | 133-2517 | 1 | Nut-Flange |
| 2 | 133-2518 | 1 | Rotating Group ASM |
| 3 | 137-5583 | 1 | Spring |
| 4 | 133-2520 | 1 | Seal Kit |
| 5 | 137-5635 | 1 | Shaft |
| 6 | 137-5636 | 1 | Bearing |
| 7 | 137-5637 | 1 | Bearing |
| 8 | 137-5638 | 1 | Screw |
| 9 | 137-5639 | 1 | Stud |

# Hydraulic Tank Assembly

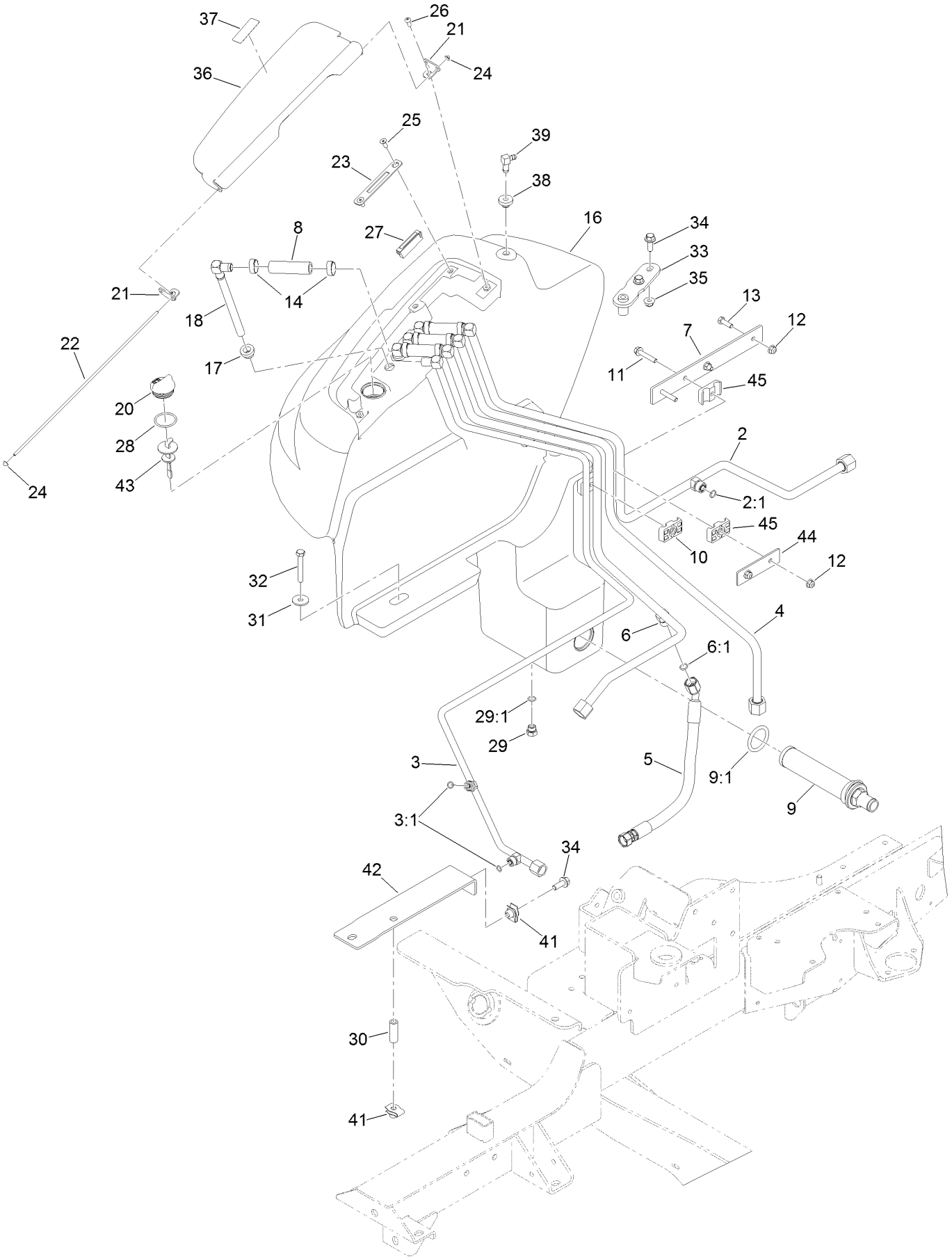

# Hydraulic Tank Assembly (continued)

| Ref. | Part Number | Qty. | Description |
|---|---|---|---|
| 2 | 125-5357 | 1 | Hydraulic Tube ASM |
| 2:1 | 237-30 | 1 | O-Ring |
| 3 | 130-2553 | 1 | Hydraulic Tube ASM |
| 3:1 | 237-22 | 2 | O-Ring |
| 4 | 130-2511 | 1 | Hydraulic Tube ASM |
| 5 | 130-2543 | 1 | Hydraulic Hose ASM |
| 6 | 130-9036 | 1 | Hydraulic Tube ASM |
| 6:1 | 237-30 | 1 | O-Ring |
| 7 | 114-4919-0P | 1 | Plate-Mount, Tube |
| 8 | 114-4920 | 4 | Hose |
| 9 | 104-7546 | 1 | Tank Strainer ASM |
| 9:1 | 340-136 | 1 | O-Ring |
| 10 | 56-7977 | 2 | Clamp-Tube |
| 11 | 94-5780 | 2 | Screw-HWH |
| 12 | 104-8300 | 4 | Nut-HF, NI |
| 13 | 322-5 | 2 | Screw-HH |
| 14 | 2412-36 | 8 | Clamp-Hose |
| 16 | 119-7726 | 1 | Hydraulic Tank ASM |
| 17 | 104-0790 | 4 | Bushing |
| 18 | 132-1384 | 4 | Tube-Drop |
| 20 | 93-7498 | 1 | Plug-Plastic |
| 21 | 114-0940 | 2 | Bracket-Hinge |
| 22 | 114-0904 | 1 | Rod |

| Ref. | Part Number | Qty. | Description |
|---|---|---|---|
| 23 | 114-0941 | 1 | Plate-Latch |
| 24 | 1-803001 | 2 | Nut-Push |
| 25 | 3274-47 | 2 | Screw-HSFH |
| 26 | 3274-31 | 2 | Screw-HSBH |
| 27 | 58-4250 | 1 | Catch-Magnetic |
| 28 | 94-8166 | 1 | O-Ring |
| 29 | 353-508 | 1 | Plug-HH |
| 29:1 | 237-42 | 1 | O-Ring |
| 30 | 95-6448 | 1 | Spacer |
| 31 | 63-8410 | 1 | Washer |
| 32 | 323-12 | 1 | Screw-HH |
| 33 | 114-0094 | 1 | Hold Down-Tank |
| 34 | 3234-42 | 3 | Screw-HHF |
| 35 | 104-8301 | 2 | Nut-HF, NI |
| 36 | 137-5592-03 | 1 | Cover-Tank, Hydraulic |
| 37 | 93-6686 | 1 | Decal-Oil, HYD |
| 38 | 46-6560 | 1 | Bushing |
| 39 | 46-6550 | 1 | Fitting-Elbow, 90 DEG |
| 41 | 105-4886 | 2 | Nut-Tinnerman |
| 42 | 130-2583-01 | 1 | Support-Tank, Hydraulic |
| 43 | 105-2812 | 1 | Dipstick |
| 44 | 131-2213-03 | 1 | Plate-Drain, Case |
| 45 | 56-7971 | 2 | Clamp-Tube |

# Hydraulic Cutting Circuit Assembly

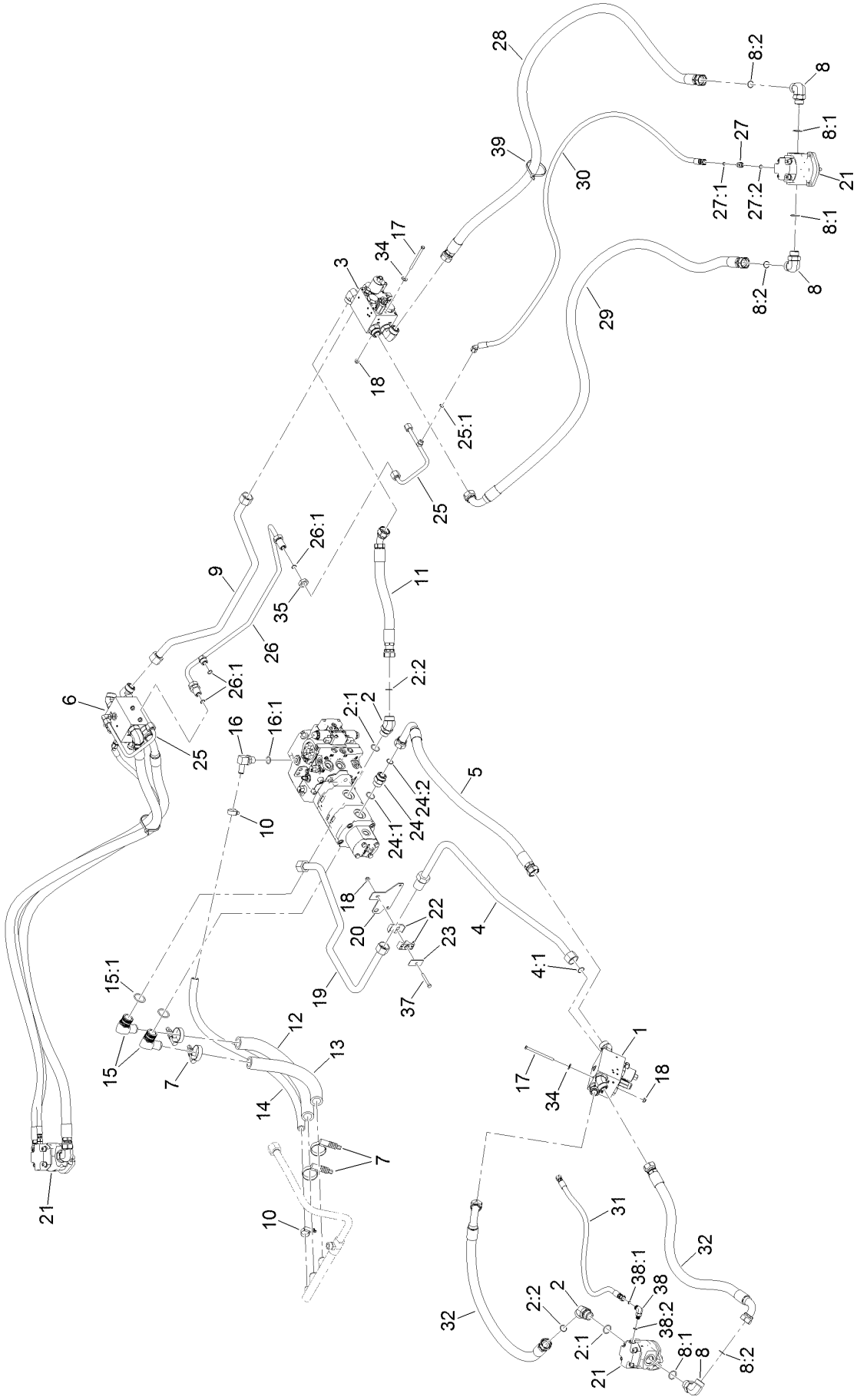

# Hydraulic Cutting Circuit Assembly (continued)

| Ref. | Part Number | Qty. | Description |
|---|---|---|---|
| 1 | | 1 | Center Deck Manifold ASM ● |
| 2 | 104-3509 | 2 | Fitting-HYD, 45 DEG |
| 2:1 | 237-146 | 1 | O-Ring |
| 2:2 | 340-65 | 1 | O-Ring |
| 3 | | 1 | LH Deck Manifold ASM ● |
| 4 | 130-2549 | 1 | Hydraulic Tube ASM |
| 4:1 | 340-65 | 1 | O-Ring |
| 5 | 125-5346 | 1 | Hydraulic Hose ASM |
| 6 | | 1 | RH Deck Manifold ASM ● |
| 7 | 121-7536 | 4 | Clamp-Torque, Constant |
| 8 | 340-129 | 5 | Fitting-Elbow, 90 DEG |
| 8:1 | 237-146 | 1 | O-Ring |
| 8:2 | 340-65 | 1 | O-Ring |
| 9 | 125-5325 | 1 | Hydraulic Tube ASM |
| 10 | 132-1383 | 2 | Clamp-Belville Sprg |
| 11 | 125-5328 | 1 | Hydraulic Hose ASM |
| 12 | 127-3466 | 1 | Hose-Hydraulic |
| 13 | 127-3467 | 1 | Hose-Hydraulic |
| 14 | 127-3468 | 1 | Hose-Hydraulic |
| 15 | 92-7526 | 2 | Fitting-HYD 90 Spcl |
| 15:1 | 237-101 | 1 | O-Ring |
| 16 | 353-987 | 1 | Fitting-Elbow, 90 |
| 16:1 | 237-81 | 1 | O-Ring |
| 17 | 130-9133 | 6 | Screw-HH |
| 18 | 104-8300 | 7 | Nut-HF, NI |
| 19 | 132-1374 | 1 | Hydraulic Tube ASM |
| 20 | 132-1377-0P | 1 | Bracket-Hydraulic |
| 21 | 125-5392 | 3 | Hydraulic Motor ASM |
| 22 | 56-7974 | 2 | Clamp-Tube |
| 23 | 69-9761 | 1 | Plate-Cover |
| 24 | 104-3797 | 1 | Fitting-Straight |
| 24:1 | 237-146 | 1 | O-Ring |
| 24:2 | 340-65 | 1 | O-Ring |
| 25 | 125-5326 | 2 | Hydraulic Tube ASM |
| 25:1 | 237-22 | 1 | O-Ring |
| 26 | 125-5356 | 1 | Hydraulic Tube ASM |
| 26:1 | 237-65 | 3 | O-Ring |
| 27 | 340-2 | 2 | Fitting-Straight |
| 27:1 | 237-22 | 1 | O-Ring |
| 27:2 | 237-42 | 1 | O-Ring |
| 28 | 130-9152 | 2 | Hydraulic Hose ASM |
| 29 | 130-9153 | 2 | Hydraulic Hose ASM |
| 30 | 130-9154 | 2 | Hydraulic Hose ASM |
| 31 | 132-1389 | 1 | Hydraulic Hose ASM |
| 32 | 130-9156 | 2 | Hydraulic Hose ASM |
| 34 | 3256-56 | 6 | Washer-Flat |
| 35 | 340-74 | 2 | Nut-Lock, Bulkhead |
| 37 | 322-12 | 1 | Screw-HH |
| 38 | 340-77 | 1 | Fitting-Elbow, 90 DEG |
| 38:1 | 237-22 | 1 | O-Ring |
| 38:2 | 237-42 | 1 | O-Ring |
| 39 | 3334-945 | 2 | Tie-Cable |

● Not serviced separately

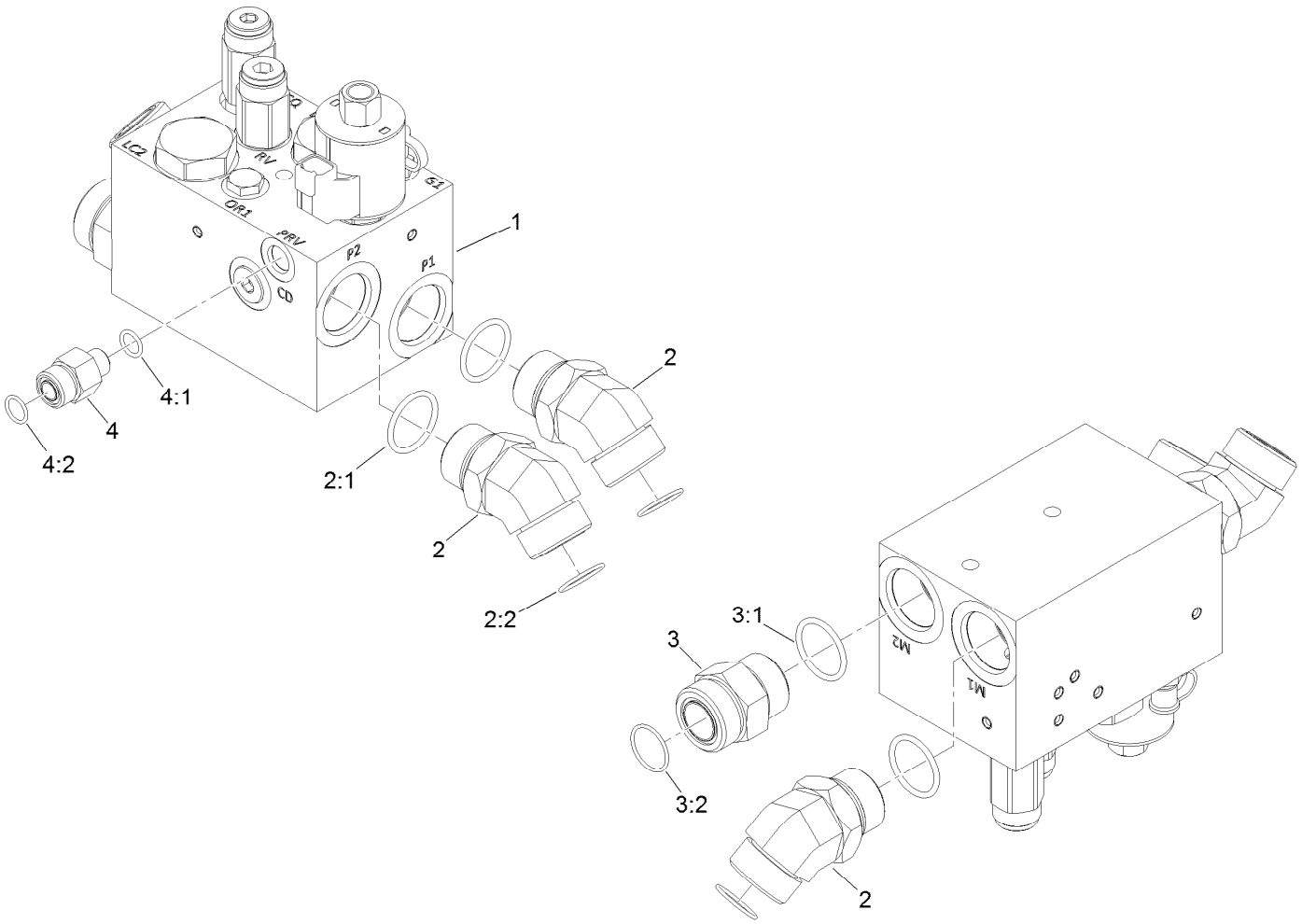


# Center Cutting Deck Drive Valve Assembly

| *Ref.* | *Part Number* | *Qty.* | *Description* |
|---|---|---|---|
| 1 | 132-1394 | 1 | Center Deck Manifold ASM |
| 2 | 104-3509 | 3 | Fitting-HYD, 45 DEG |
| 2:1 | 237-146 | 1 | O-Ring |
| 2:2 | 340-65 | 1 | O-Ring |
| 3 | 104-3797 | 1 | Fitting-Straight |
| 3:1 | 237-146 | 1 | O-Ring |
| 3:2 | 340-65 | 1 | O-Ring |
| 4 | 340-5 | 1 | Fitting-Straight |
| 4:1 | 237-42 | 1 | O-Ring |
| 4:2 | 237-30 | 1 | O-Ring |

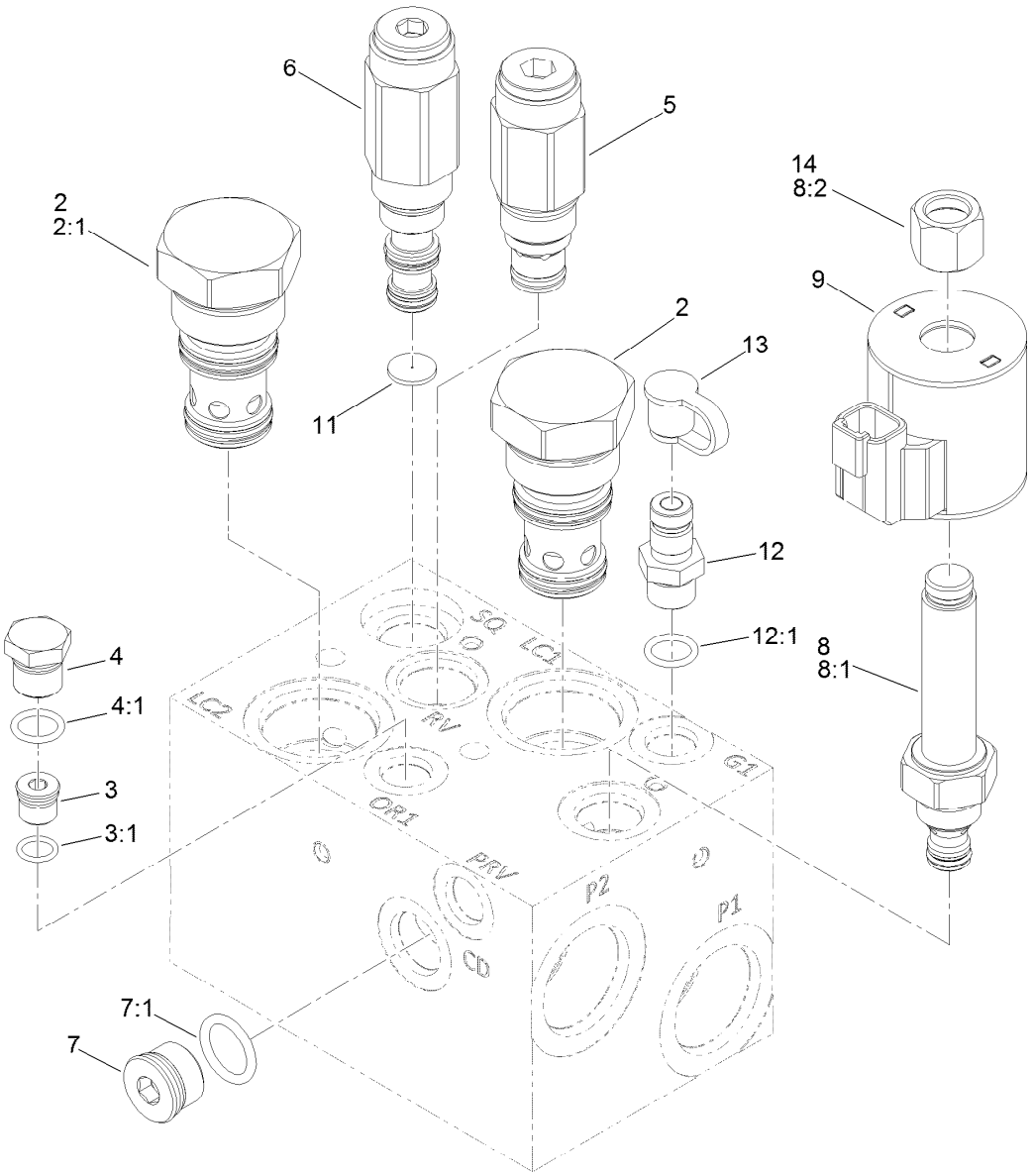


# Hydraulic Manifold Assembly No. 132-1394

| Ref. | Part Number | Qty. | Description |
|---|---|---|---|
| 2 | 132-4896 | 2 | Element-Logic |
| 2:1 | 139-7839 | 1 | Seal Kit |
| 3 | 353-990 | 1 | Plug ASM |
| 3:1 | 237-78 | 1 | O-Ring |
| 4 | 353-508 | 1 | Plug-HH |
| 4:1 | 237-42 | 1 | O-Ring |
| 5 | 132-4894 | 1 | Valve-Relief, Poppet |
| 6 | 132-4893 | 1 | Valve-Sequence, 110 PSI |
| 7 | 353-988 | 1 | Plug-Hex |
| 7:1 | 237-79 | 1 | O-Ring |

| Ref. | Part Number | Qty. | Description |
|---|---|---|---|
| 8 | 117-0227 | 1 | Valve-Relief, Proportional |
| 8:1 | 105-9156 | 1 | Seal Kit |
| 8:2 | 130-8180 | 1 | Nut-Coil (9/16-24 Unef-2B) |
| 9 | 119-4619 | 1 | Coil-Solenoid |
| 11 | 132-4891 | 1 | Disc-Orifice |
| 12 | 59-7410 | 1 | Fitting-Diagnostic |
| 12:1 | 237-42 | 1 | O-Ring |
| 13 | 354-79 | 1 | Cap-Dust |
| 14 | 130-8180 | 1 | Nut-Coil (9/16-24 Unef-2B) |

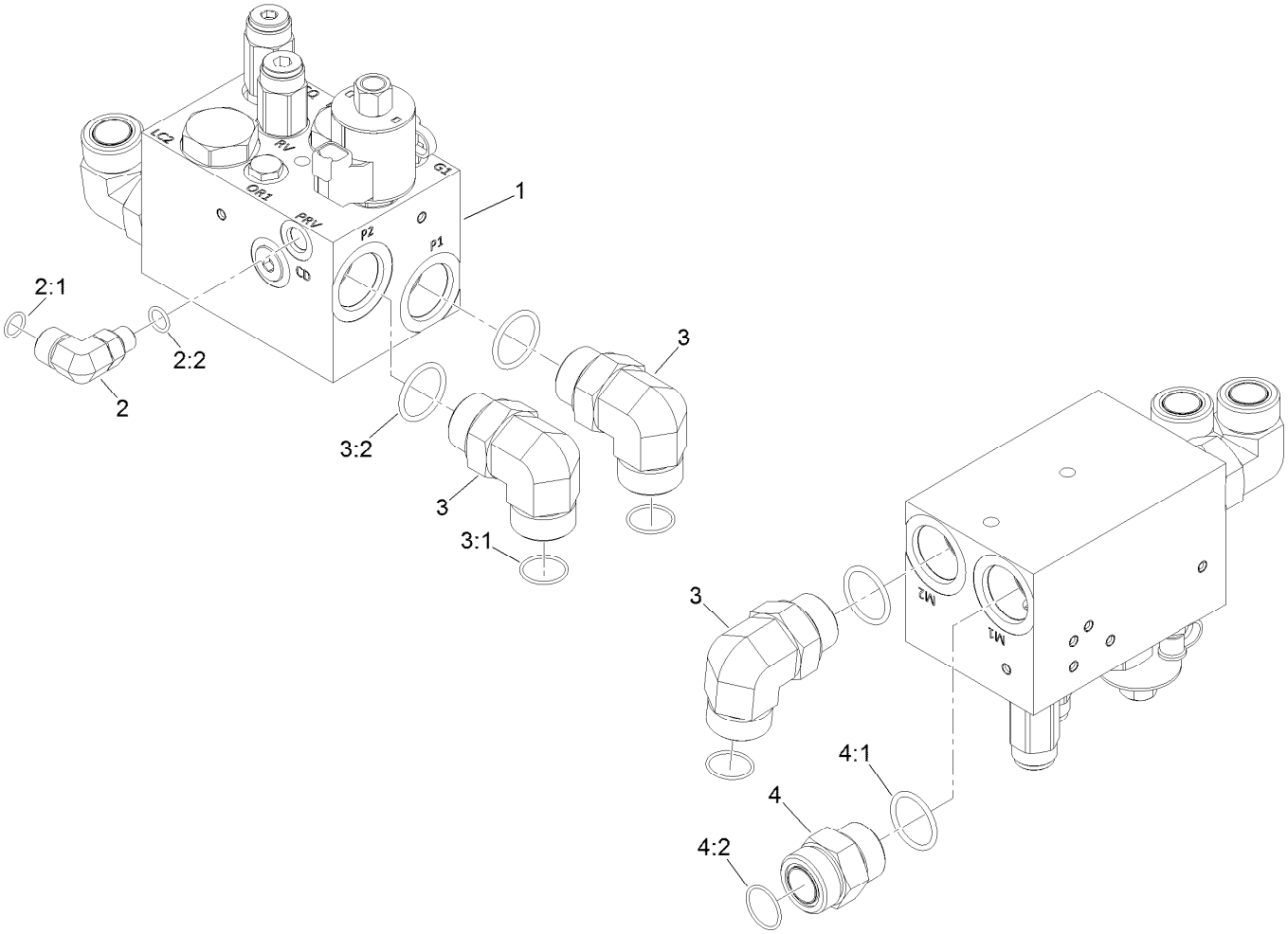


# LH Cutting Deck Drive Valve Assembly

| *Ref.* | *Part Number* | *Qty.* | *Description* |
|---|---|---|---|
| 1 | 132-1395 | 1 | LH Deck Manifold ASM |
| 2 | 340-99 | 1 | Fitting-HYD, 90 DEG |
| 2:1 | 237-30 | 1 | O-Ring |
| 2:2 | 237-42 | 1 | O-Ring |
| 3 | 340-129 | 3 | Fitting-Elbow, 90 DEG |
| 3:1 | 237-146 | 1 | O-Ring |
| 3:2 | 340-65 | 1 | O-Ring |
| 4 | 104-3797 | 1 | Fitting-Straight |
| 4:1 | 237-146 | 1 | O-Ring |
| 4:2 | 340-65 | 1 | O-Ring |

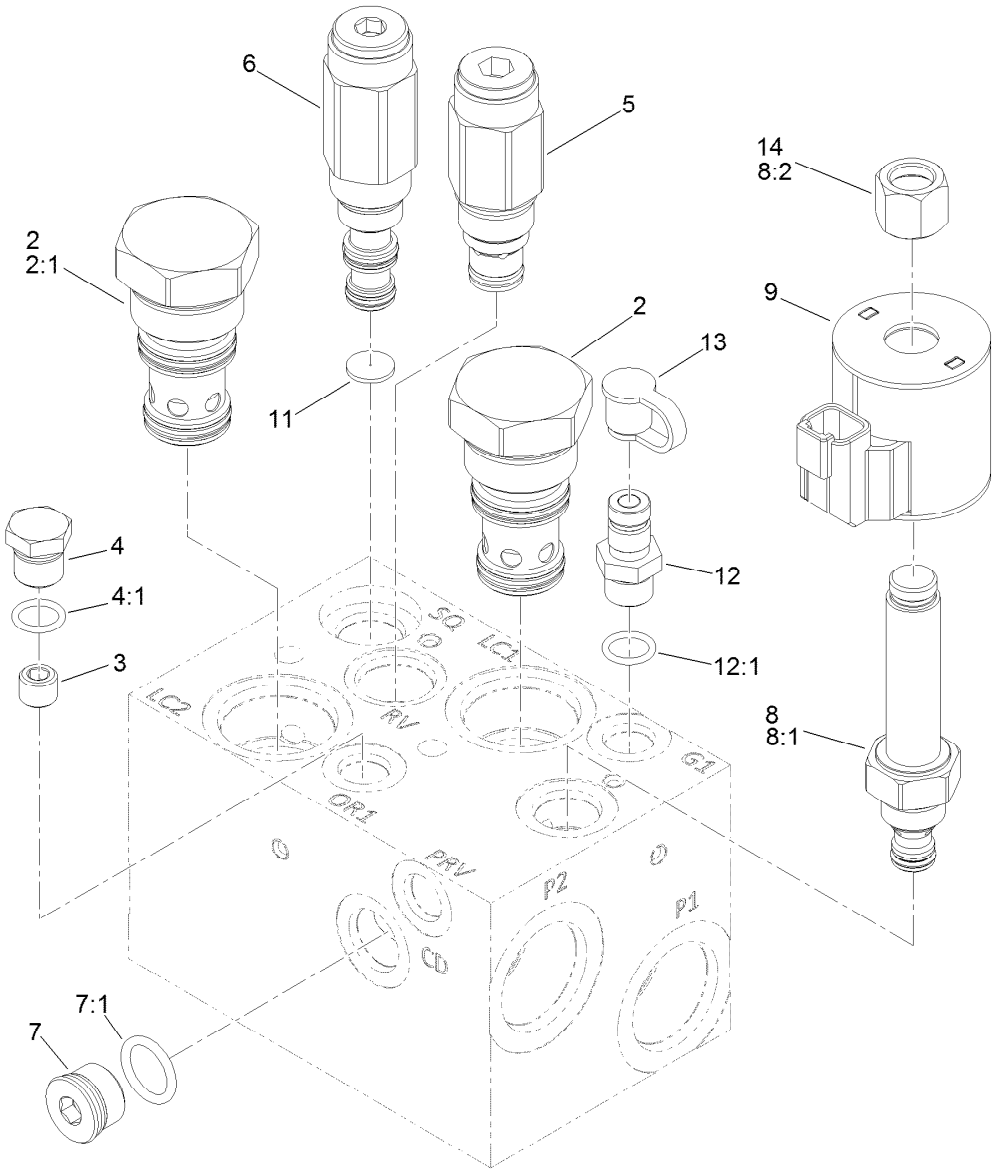


# Hydraulic Manifold Assembly No. 132-1395

| Ref. | Part Number | Qty. | Description |
|---|---|---|---|
| 2 | 132-4896 | 2 | Element-Logic |
| 2:1 | 139-7839 | 1 | Seal Kit |
| 3 | 132-4895 | 1 | Orifice |
| 4 | 353-508 | 1 | Plug-HH |
| 4:1 | 237-42 | 1 | O-Ring |
| 5 | 132-4894 | 1 | Valve-Relief, Poppet |
| 6 | 132-4893 | 1 | Valve-Sequence, 110 PSI |
| 7 | 353-988 | 1 | Plug-Hex |
| 7:1 | 237-79 | 1 | O-Ring |

| Ref. | Part Number | Qty. | Description |
|---|---|---|---|
| 8 | 117-0227 | 1 | Valve-Relief, Proportional |
| 8:1 | 105-9156 | 1 | Seal Kit |
| 8:2 | 130-8180 | 1 | Nut-Coil (9/16-24 Unef-2B) |
| 9 | 119-4619 | 1 | Coil-Solenoid |
| 11 | 132-4891 | 1 | Disc-Orifice |
| 12 | 59-7410 | 1 | Fitting-Diagnostic |
| 12:1 | 237-42 | 1 | O-Ring |
| 13 | 354-79 | 1 | Cap-Dust |
| 14 | 130-8180 | 1 | Nut-Coil (9/16-24 Unef-2B) |

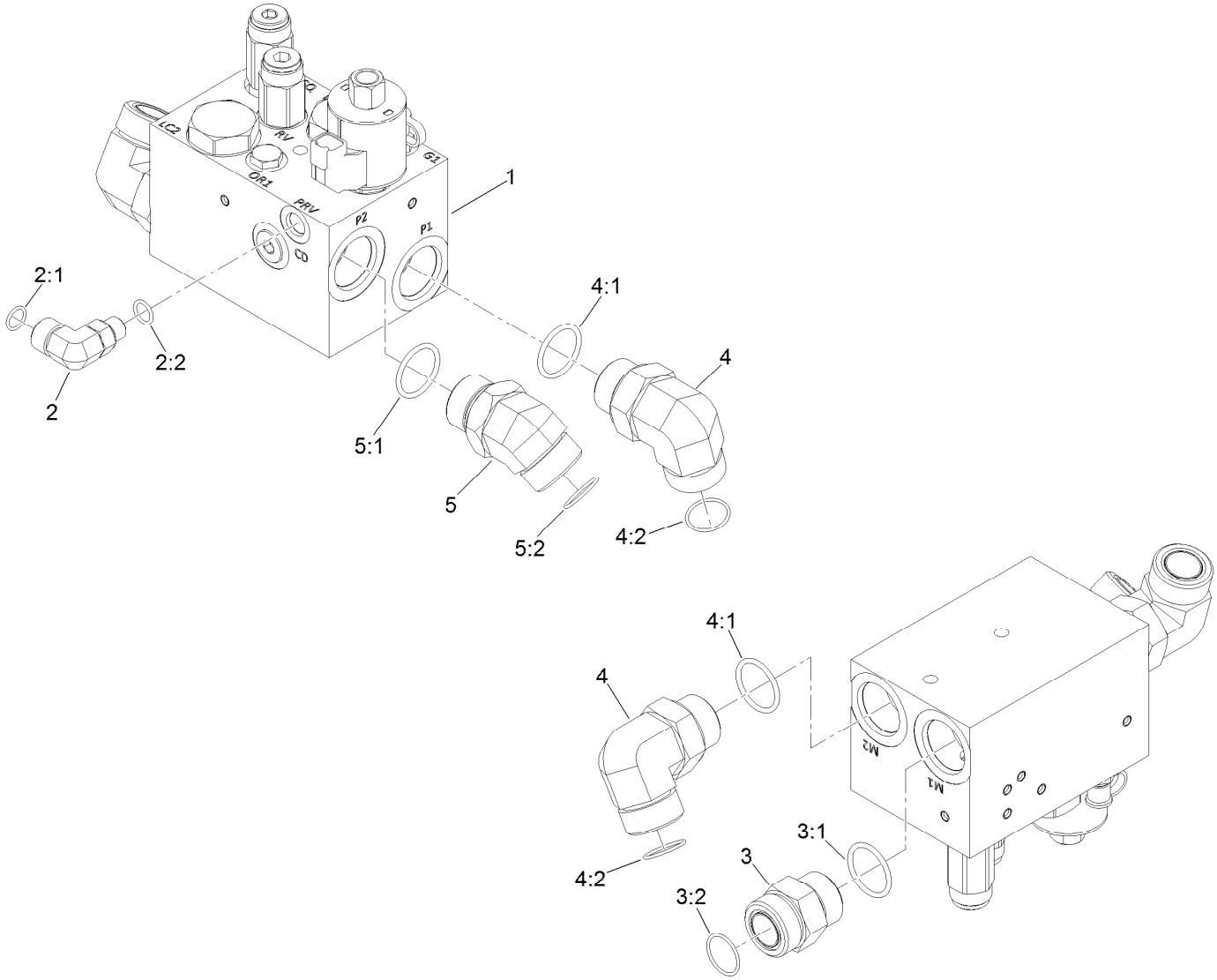


# RH Cutting Deck Drive Valve Assembly

| *Ref.* | *Part Number* | *Qty.* | *Description* |
|---|---|---|---|
| 1 | 132-1396 | 1 | RH Deck Manifold ASM |
| 2 | 340-99 | 1 | Fitting-HYD, 90 DEG |
| 2:1 | 237-30 | 1 | O-Ring |
| 2:2 | 237-42 | 1 | O-Ring |
| 3 | 104-3797 | 1 | Fitting-Straight |
| 3:1 | 237-146 | 1 | O-Ring |
| 3:2 | 340-65 | 1 | O-Ring |
| 4 | 340-129 | 2 | Fitting-Elbow, 90 DEG |
| 4:1 | 237-146 | 1 | O-Ring |
| 4:2 | 340-65 | 1 | O-Ring |
| 5 | 104-3509 | 1 | Fitting-HYD, 45 DEG |
| 5:1 | 237-146 | 1 | O-Ring |
| 5:2 | 340-65 | 1 | O-Ring |

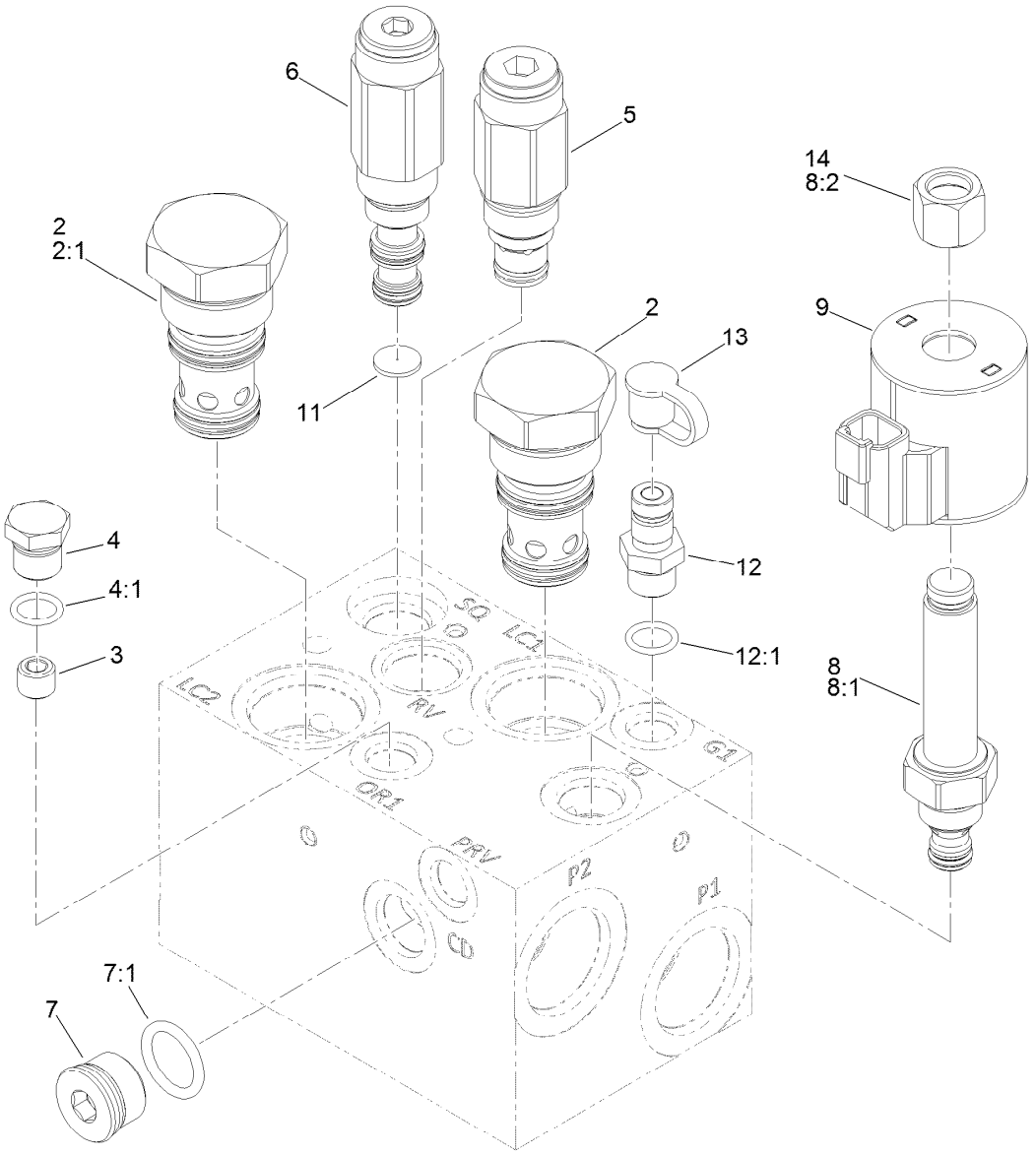


# Hydraulic Manifold Assembly No. 132-1396

| Ref. | Part Number | Qty. | Description |
|---|---|---|---|
| 2 | 132-4896 | 2 | Element-Logic |
| 2:1 | 139-7839 | 1 | Seal Kit |
| 3 | 132-4895 | 1 | Orifice |
| 4 | 353-508 | 1 | Plug-HH |
| 4:1 | 237-42 | 1 | O-Ring |
| 5 | 132-4894 | 1 | Valve-Relief, Poppet |
| 6 | 132-4893 | 1 | Valve-Sequence, 110 PSI |
| 7 | 353-988 | 1 | Plug-Hex |
| 7:1 | 237-79 | 1 | O-Ring |

| Ref. | Part Number | Qty. | Description |
|---|---|---|---|
| 8 | 117-0227 | 1 | Valve-Relief, Proportional |
| 8:1 | 105-9156 | 1 | Seal Kit |
| 8:2 | 130-8180 | 1 | Nut-Coil (9/16-24 Unef-2B) |
| 9 | 119-4619 | 1 | Coil-Solenoid |
| 11 | 132-4891 | 1 | Disc-Orifice |
| 12 | 59-7410 | 1 | Fitting-Diagnostic |
| 12:1 | 237-42 | 1 | O-Ring |
| 13 | 354-79 | 1 | Cap-Dust |
| 14 | 130-8180 | 1 | Nut-Coil (9/16-24 Unef-2B) |

# Hydraulic Motor Assembly No. 125-5392

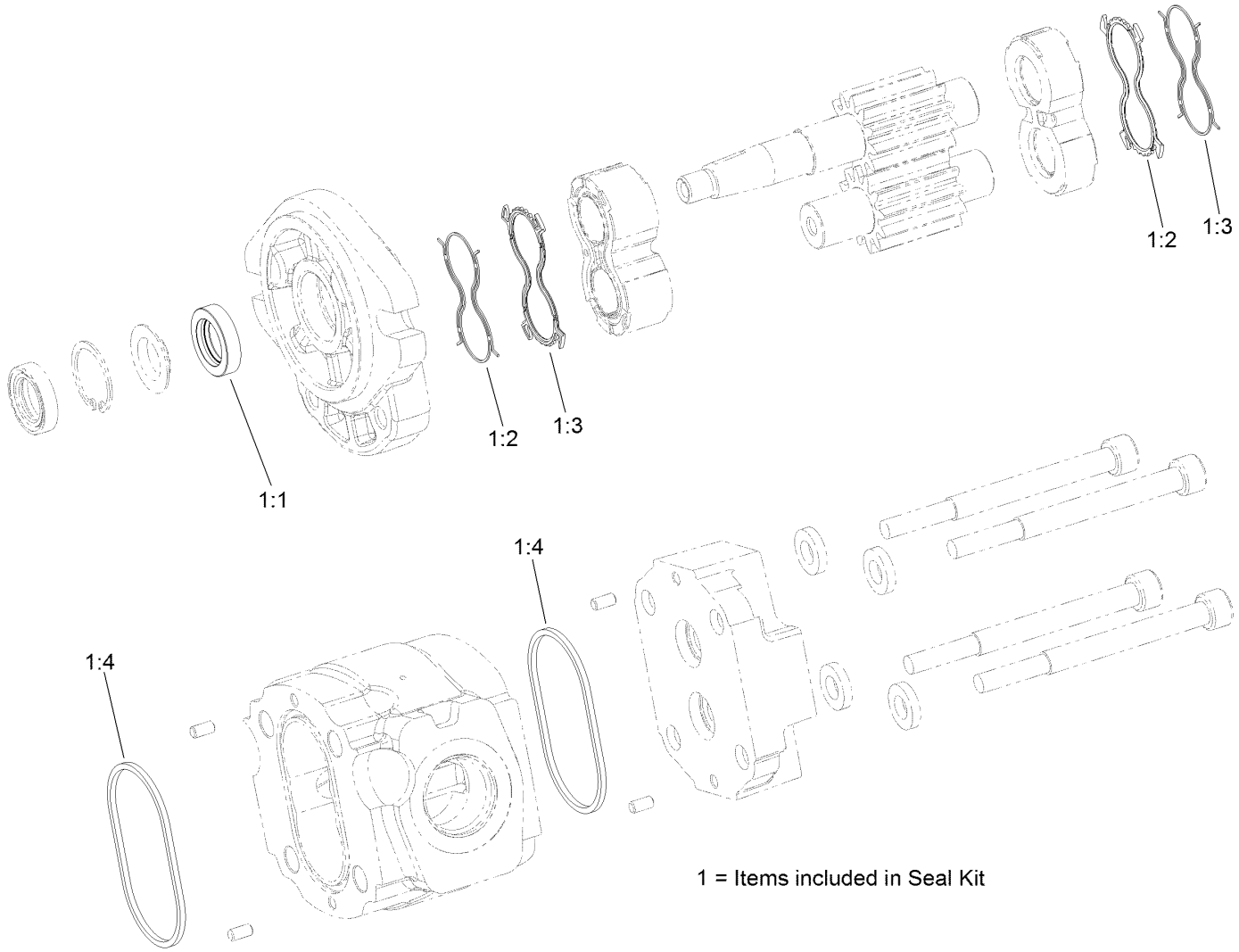


1 = Items included in Seal Kit

# Hydraulic Motor Assembly No. 125-5392 (continued)

| Ref. | Part Number | Qty. | Description |
|---|---|---|---|
| 1 | 115-4110 | 1 | Seal Kit |
| 1:1 | | 2 | Seal-Shaft ● |
| 1:2 | | 2 | Seal-Plate, Balancing ● |
| 1:3 | | 2 | Seal-Anti Extrusion ● |
| 1:4 | | 2 | O-Ring (Housing) ● |

● Not serviced separately

# Hydraulic Steering/Lift Circuit Assembly

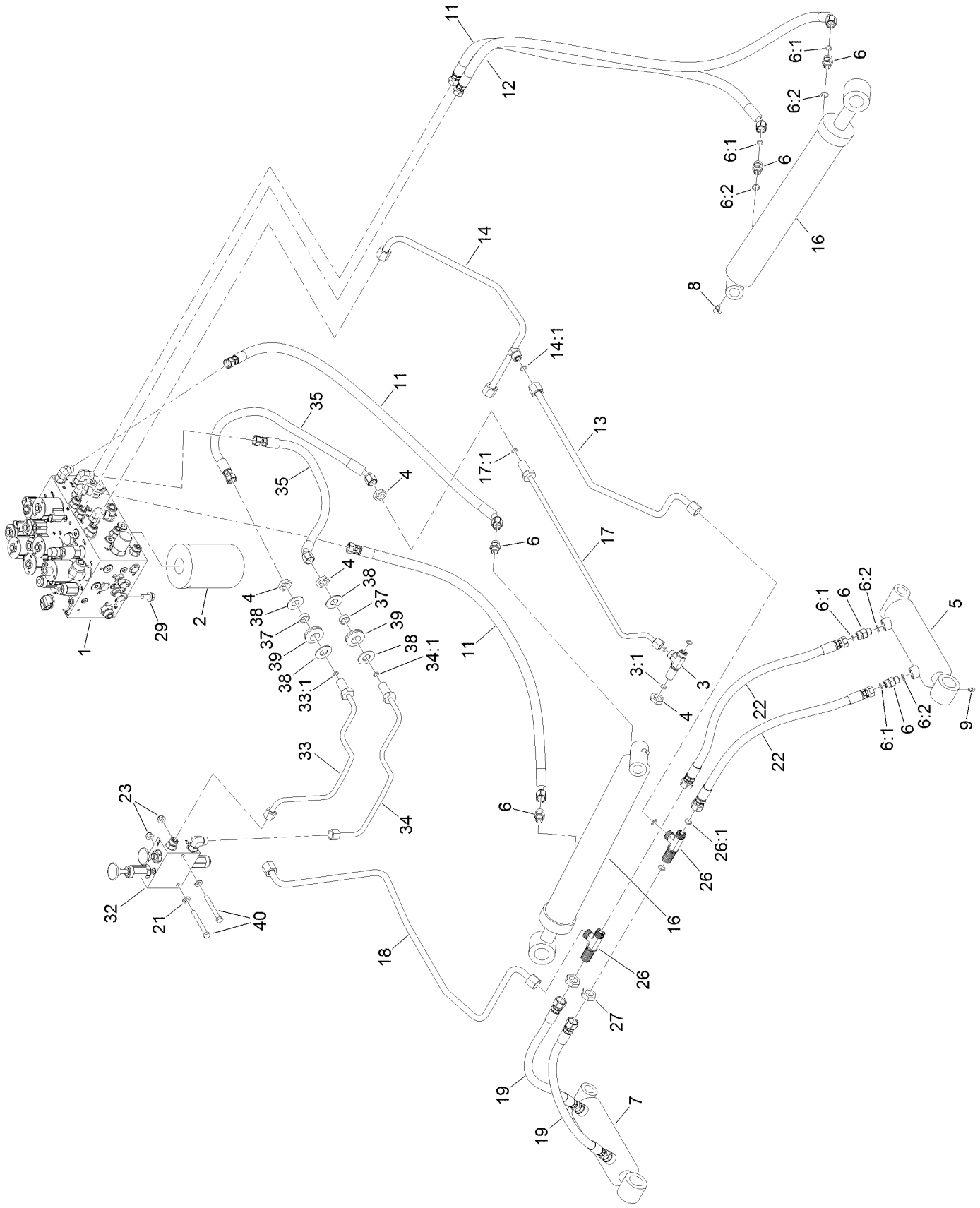

# Hydraulic Steering/Lift Circuit Assembly (continued)

| Ref. | Part Number | Qty. | Description |
|---|---|---|---|
| 1 | 137-5626 | 1 | Manifold-Steering/Lift |
| 2 | 75-1310 | 1 | Filter-HYD |
| 3 | 340-68 | 1 | Fitting-Tee, Bulkhead |
| 3:1 | 237-22 | 3 | O-Ring |
| 4 | 340-70 | 4 | Nut-Lock |
| 5 | 114-4831 | 1 | LH Lift Cylinder ASM |
| 6 | 340-2 | 8 | Fitting-Straight |
| 6:1 | 237-22 | 1 | O-Ring |
| 6:2 | 237-42 | 1 | O-Ring |
| 7 | 114-4830 | 1 | RH Lift Cylinder ASM |
| 8 | 302-60 | 2 | Fitting-Grease |
| 9 | 302-5 | 4 | Fitting-Grease |
| 11 | 131-2216 | 3 | Hydraulic Hose ASM |
| 12 | 131-2217 | 1 | Hydraulic Hose ASM |
| 13 | 130-9035 | 1 | Hydraulic Tube ASM |
| 14 | 131-2374 | 1 | Hydraulic Tube ASM |
| 14:1 | 237-30 | 1 | O-Ring |
| 16 | 114-5685 | 2 | HYD Cylinder ASM |
| 17 | 131-2371 | 1 | Hydraulic Tube ASM |
| 17:1 | 237-22 | 1 | O-Ring |

| Ref. | Part Number | Qty. | Description |
|---|---|---|---|
| 18 | 130-9038 | 1 | Hydraulic Tube ASM |
| 19 | 131-2298 | 2 | Hydraulic Hose ASM |
| 21 | 3256-23 | 2 | Washer-Plain |
| 22 | 131-2299 | 2 | Hydraulic Hose ASM |
| 23 | 104-8300 | 2 | Nut-HF, NI |
| 26 | 340-121 | 2 | Fitting-Tee |
| 26:1 | 237-30 | 3 | O-Ring |
| 27 | 340-127 | 2 | Nut-Bulkhead |
| 29 | 3234-12 | 4 | Screw-HHF |
| 32 | 132-1378 | 1 | Manual Park Brake Manifold ASM |
| 33 | 132-1380 | 1 | Hydraulic Tube ASM |
| 33:1 | 237-22 | 1 | O-Ring |
| 34 | 132-1381 | 1 | Hydraulic Tube ASM |
| 34:1 | 237-22 | 1 | O-Ring |
| 35 | 132-1382 | 2 | Hydraulic Hose ASM |
| 37 | 69-8970 | 2 | Spacer |
| 38 | 69-8940 | 4 | Washer |
| 39 | 240-4 | 2 | Grommet-Rubber |
| 40 | 322-13 | 2 | Screw-HH |

# Steering/Lift Valve Assembly No. 137-5626

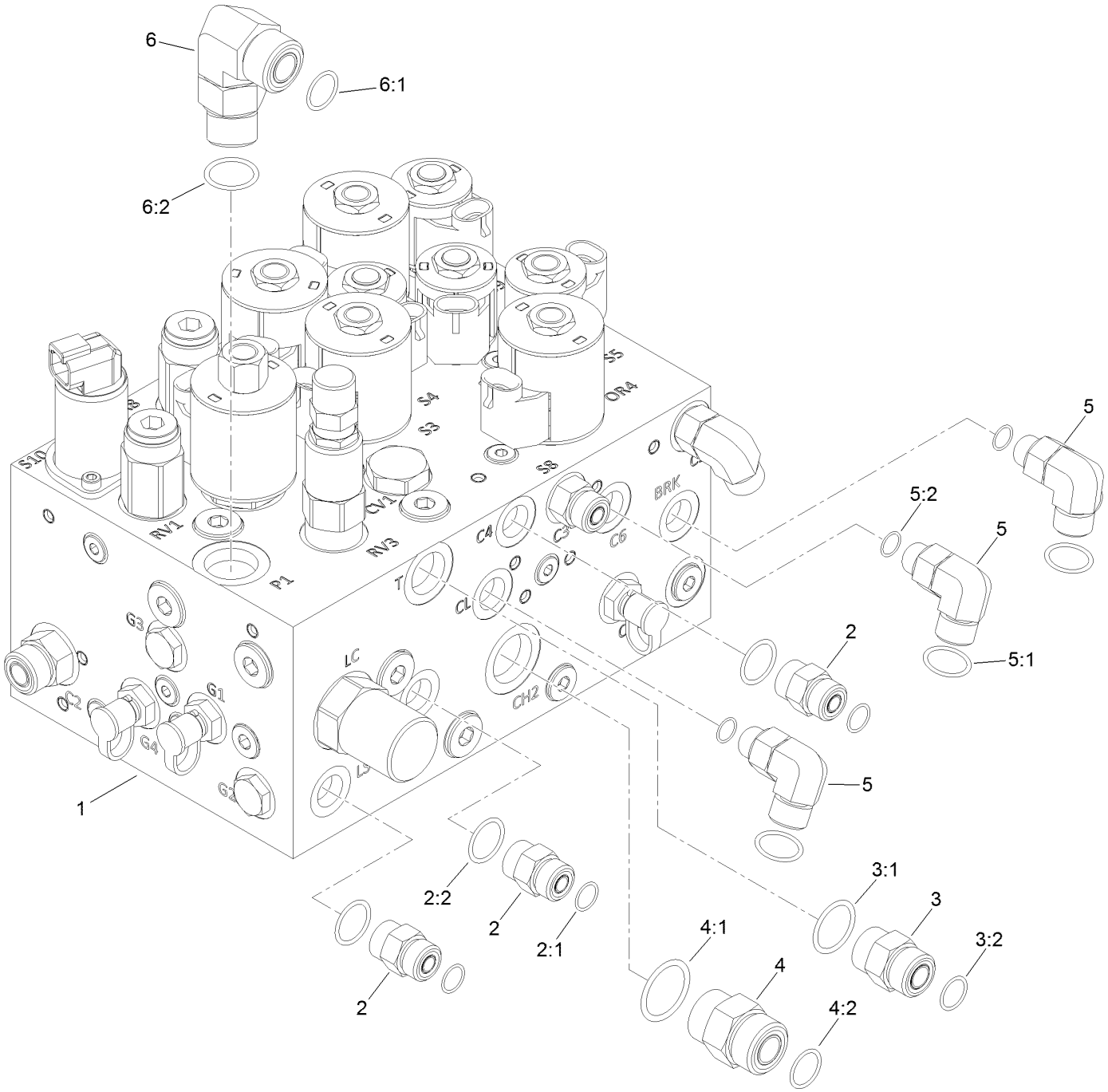

# Steering/Lift Valve Assembly No. 137-5626 (continued)

| Ref. | Part Number | Qty. | Description |
|---|---|---|---|
| 1 | 137-5625 | 1 | Manifold-Steering/Lift |
| 2 | 340-2 | 3 | Fitting-Straight |
| 2:1 | 237-22 | 1 | O-Ring |
| 2:2 | 237-42 | 1 | O-Ring |
| 3 | 340-77 | 3 | Fitting-Elbow, 90 DEG |
| 3:1 | 237-22 | 1 | O-Ring |
| 3:2 | 237-42 | 1 | O-Ring |
| 4 | 340-4 | 1 | Fitting-Straight |
| 4:1 | 237-30 | 1 | O-Ring |
| 4:2 | 237-79 | 1 | O-Ring |
| 5 | 340-7 | 1 | Fitting-Straight |
| 5:1 | 237-65 | 1 | O-Ring |
| 5:2 | 237-80 | 1 | O-Ring |
| 6 | 340-17 | 1 | Fitting-Elbow, 90 DEG |
| 6:1 | 237-65 | 1 | O-Ring |
| 6:2 | 237-80 | 1 | O-Ring |

# Hydraulic Steering/Lift Manifold
# Assembly No. 137-5625

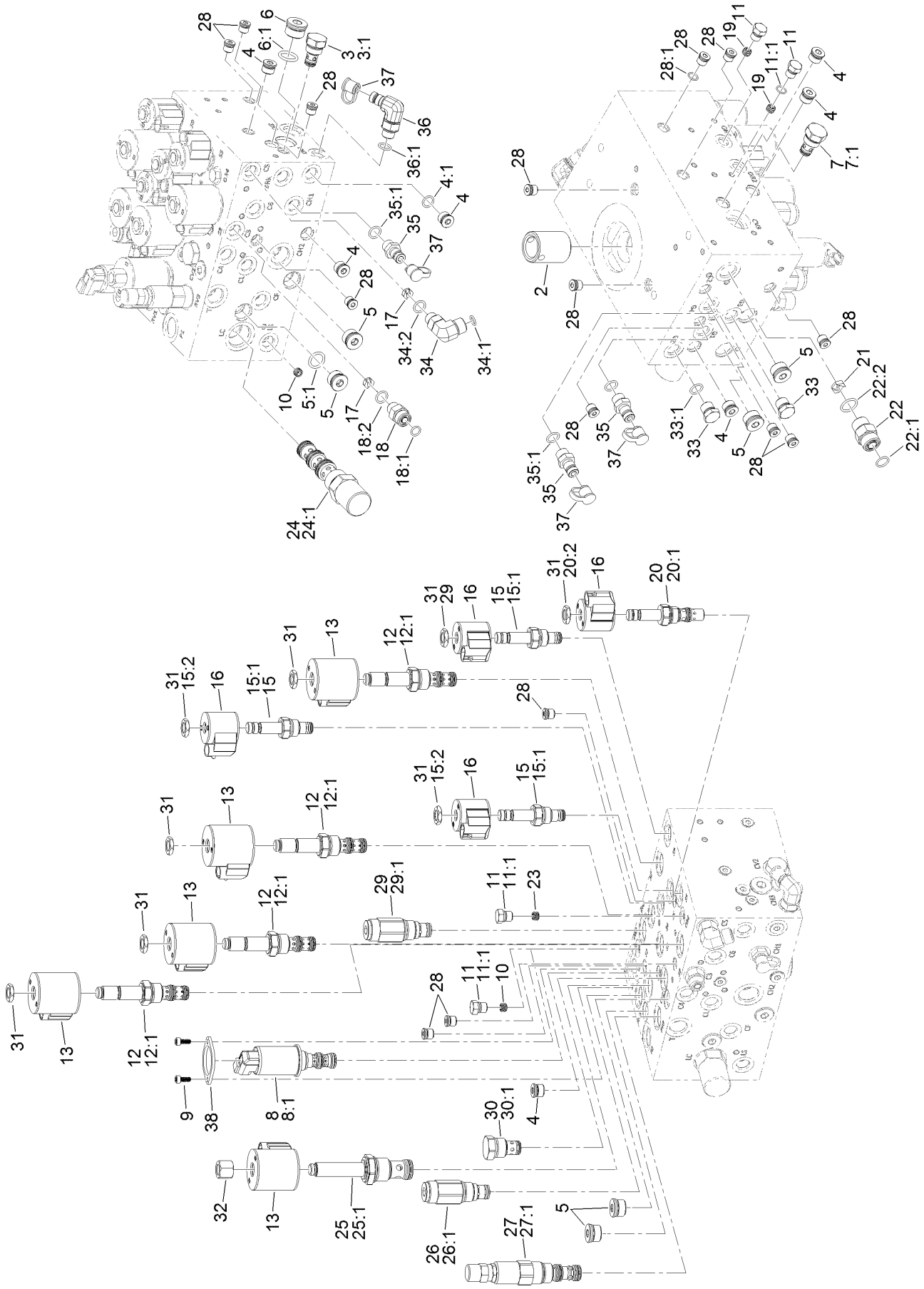

# Hydraulic Steering/Lift Manifold
# Assembly No. 137-5625 (continued)

| Ref. | Part Number | Qty. | Description |
|---|---|---|---|
| 2 | 125-7551 | 1 | Nipple-Filter |
| 3 | 132-4916 | 1 | Valve-Check |
| 3:1 | 105-9156 | 1 | Seal Kit |
| 4 | 353-989 | 7 | Plug-Hex, Hollow |
| 4:1 | 237-42 | 1 | O-Ring |
| 5 | 353-988 | 6 | Plug-Hex |
| 5:1 | 237-79 | 1 | O-Ring |
| 6 | 354-70 | 1 | Plug-Hex, Hollow |
| 6:1 | 237-80 | 1 | O-Ring |
| 7 | 105-9321 | 1 | Check Valve ASM |
| 7:1 | 105-9156 | 1 | Seal Kit |
| 8 | 138-3828 | 1 | Valve-Solenoid, 3 Way 2 Position |
| 8:1 | 138-3831 | 1 | Seal Kit |
| 9 | 138-3827 | 2 | Screw |
| 10 | 110-5973 | 2 | Orifice-0.030 |
| 11 | 353-512 | 4 | Plug |
| 11:1 | 237-78 | 1 | O-Ring |
| 12 | 125-7556 | 4 | Solenoid Valve ASM |
| 12:1 | 107-7813 | 1 | Seal Kit |
| 13 | 110-6344 | 5 | Coil-12V, DC |
| 15 | 112-9206 | 3 | Solenoid Valve ASM |
| 15:1 | 105-9156 | 1 | Seal Kit |
| 15:2 | 110-2634 | 1 | Nut-Coil |
| 16 | 110-0497 | 4 | Coil-Solenoid |
| 17 | 132-4917 | 2 | Orifice-Check, 0.088 DIA |
| 18 | 340-2 | 1 | Fitting-Straight |
| 18:1 | 237-22 | 1 | O-Ring |
| 18:2 | 237-42 | 1 | O-Ring |
| 19 | 110-8887 | 2 | Plug-Orifice (0.055) |
| 20 | 115-5405 | 1 | Solenoid Valve ASM |
| 20:1 | 115-5413 | 1 | Seal Kit |
| 20:2 | 110-2634 | 1 | Nut-Coil |
| 21 | 132-4918 | 1 | Orifice-Control, Flow |
| 22 | 340-4 | 1 | Fitting-Straight |
| 22:1 | 237-30 | 1 | O-Ring |
| 22:2 | 237-79 | 1 | O-Ring |
| 23 | 130-1674 | 1 | Orifice-Control, Flow |
| 24 | 139-7834 | 1 | Pressure Compensator |
| 24:1 | 110-6111 | 1 | Seal Kit |
| 25 | 132-4920 | 1 | Valve-Solenoid |
| 25:1 | 110-0470 | 1 | Seal Kit |
| 26 | 132-4921 | 1 | Valve-Relief, Poppet Type |
| 26:1 | 110-6316 | 1 | Seal Kit |
| 27 | 132-4923 | 1 | Vented Logic Element |
| 27:1 | 119-2159 | 1 | Seal Kit |
| 28 | 353-990 | 15 | Plug ASM |
| 28:1 | 237-78 | 1 | O-Ring |
| 29 | 132-4922 | 1 | Valve-Relief, Poppet Type |
| 29:1 | 110-6316 | 1 | Seal Kit |
| 30 | 110-8881 | 1 | Valve-Check |
| 30:1 | 105-9159 | 1 | Seal Kit |
| 31 | 110-2634 | 8 | Nut-Coil |
| 32 | 130-8181 | 1 | Nut-Coil (1/2-20 Unf-2B) |
| 33 | 353-508 | 2 | Plug-HH |
| 33:1 | 237-42 | 1 | O-Ring |
| 34 | 340-77 | 1 | Fitting-Elbow, 90 DEG |
| 34:1 | 237-22 | 1 | O-Ring |
| 34:2 | 237-42 | 1 | O-Ring |
| 35 | 59-7410 | 3 | Fitting-Diagnostic |
| 35:1 | 237-42 | 1 | O-Ring |
| 36 | 115-9148 | 1 | Fitting-Elbow-90 |
| 36:1 | 237-42 | 1 | O-Ring |
| 37 | 354-79 | 4 | Cap-Dust |
| 38 | 138-3825 | 1 | Plate-Mounting, Standard |

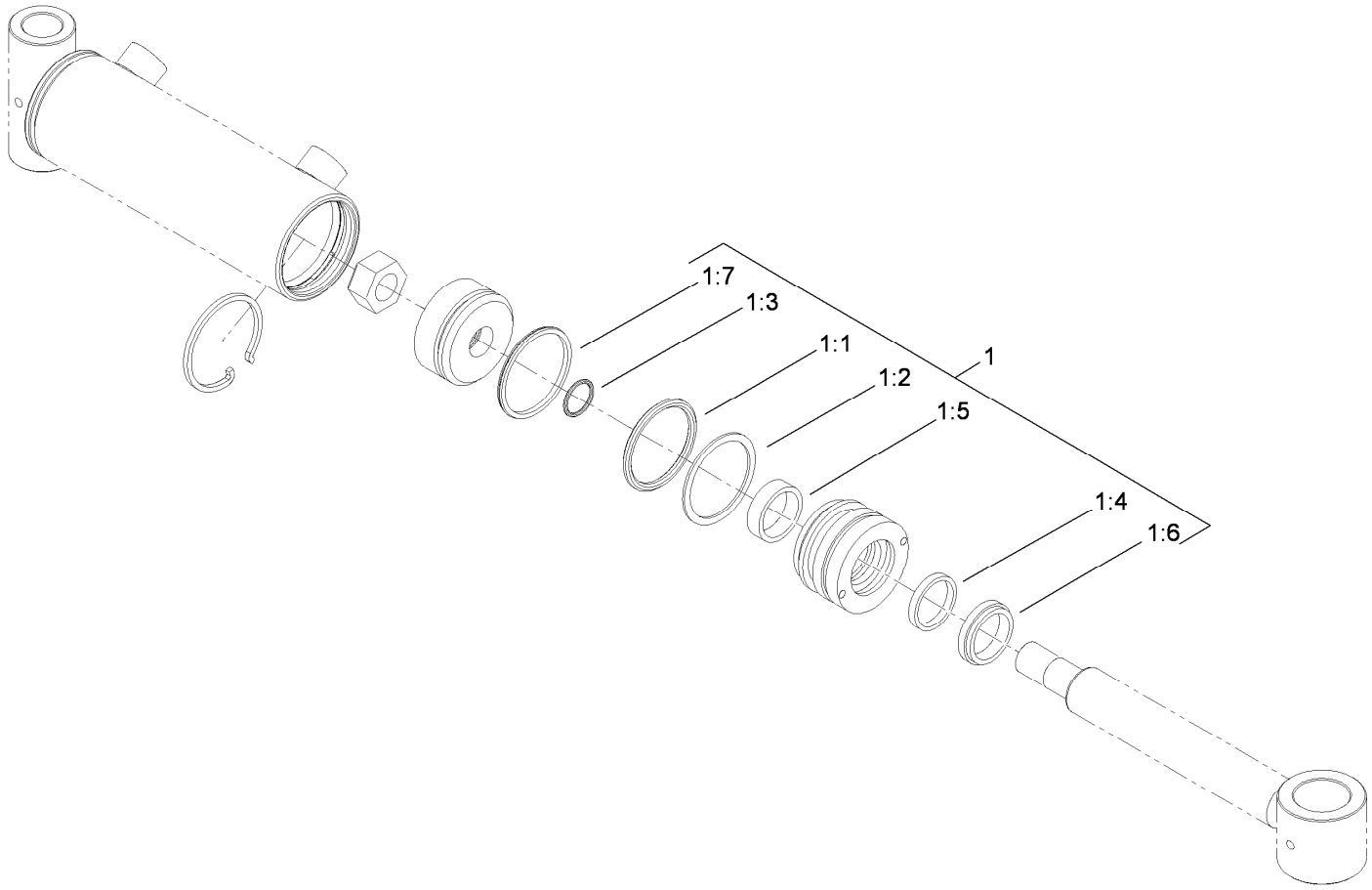


# Hydraulic Cylinder Assembly No. 114-4831

| *Ref.* | *Part Number* | *Qty.* | *Description* |
|---|---|---|---|
| 1 | 114-5611 | 1 | Seal Kit |
| 1:1 | | 1 | O-Ring ● |
| 1:2 | | 1 | Backup ● |
| 1:3 | | 1 | Seal-Bp ● |
| 1:4 | | 1 | Seal-Bs ● |
| 1:5 | | 1 | Ring-Wear ● |
| 1:6 | | 1 | Seal-Dust ● |
| 1:7 | | 1 | O-Ring ● |

● Not serviced separately

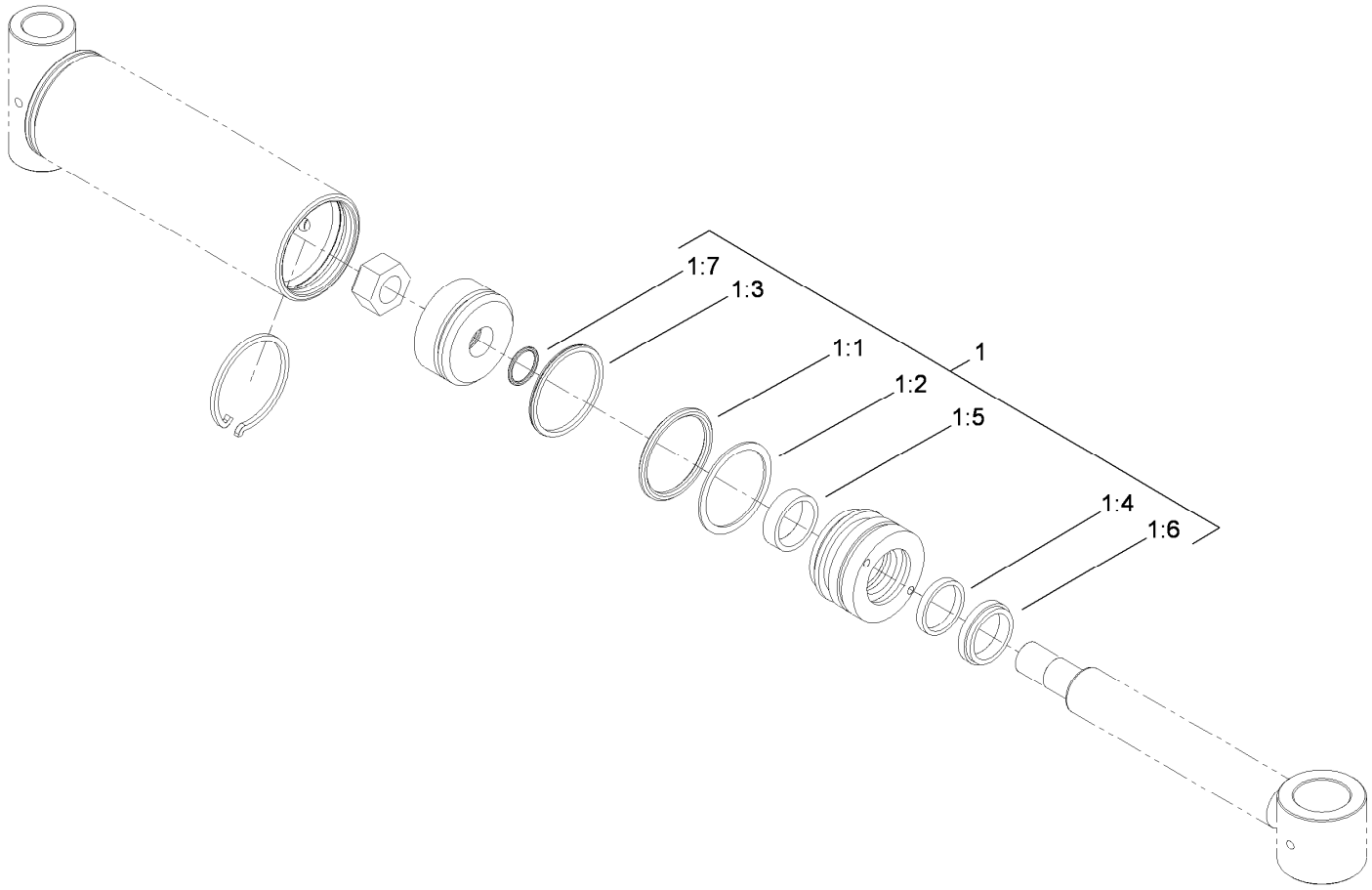


# Hydraulic Cylinder Assembly No. 114-4830

| *Ref.* | *Part Number* | *Qty.* | *Description* |
|---|---|---|---|
| 1 | 114-5611 | 1 | Seal Kit |
| 1:1 | | 1 | O-Ring ● |
| 1:2 | | 1 | Backup ● |
| 1:3 | | 1 | Seal-Bp ● |
| 1:4 | | 1 | Seal-Bs ● |
| 1:5 | | 1 | Ring-Wear ● |
| 1:6 | | 1 | Seal-Dust ● |
| 1:7 | | 1 | O-Ring ● |

● Not serviced separately

# Hydraulic Cylinder Assembly No. 114-5685

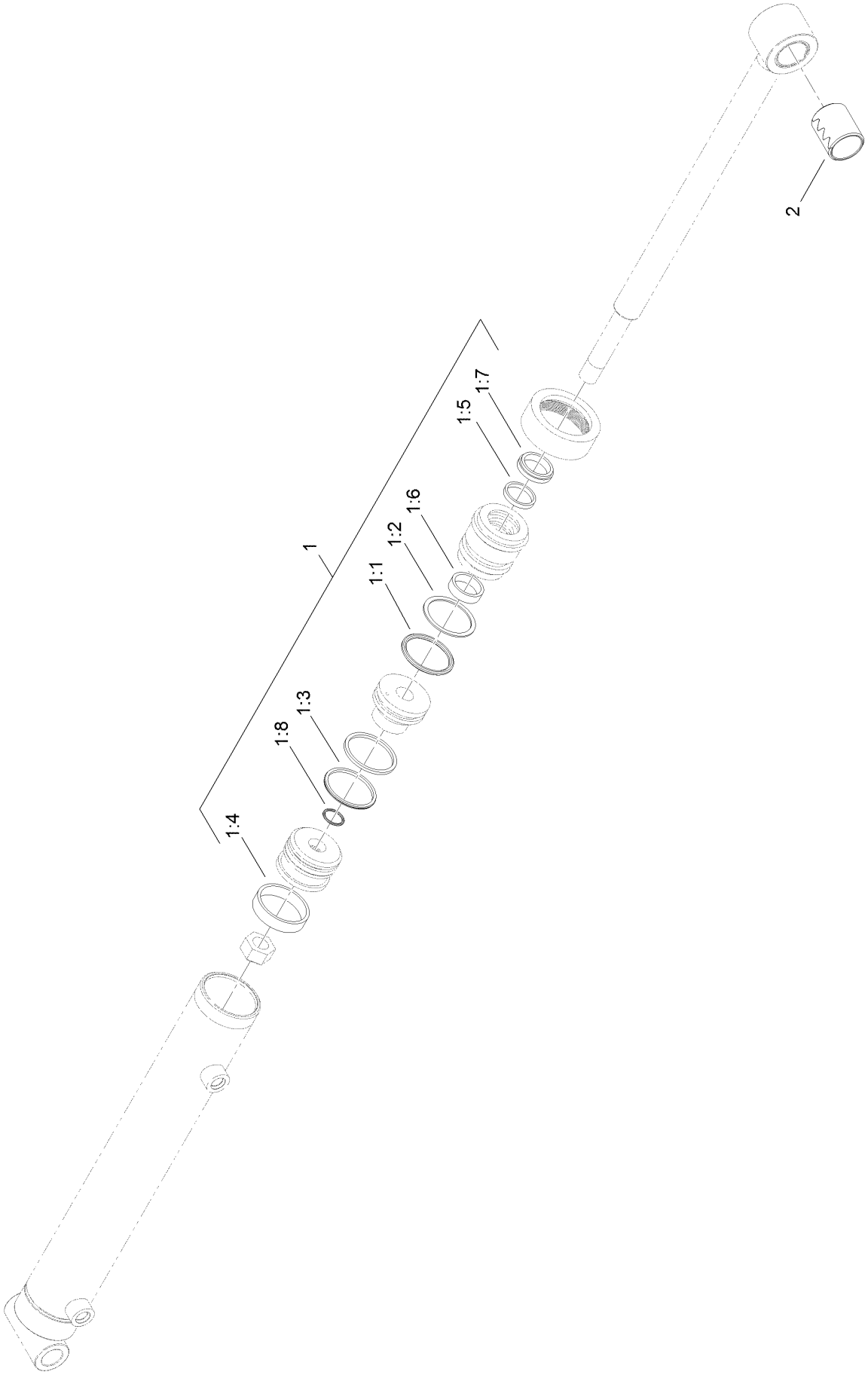

# Hydraulic Cylinder Assembly No. 114-5685 (continued)

| Ref. | Part Number | Qty. | Description |
|---|---|---|---|
| 1 | 114-5612 | 1 | Seal Kit |
| 1:1 | | 1 | O-Ring ● |
| 1:2 | | 1 | Backup ● |
| 1:3 | | 1 | Seal-Bp ● |
| 1:4 | | 1 | Ring-Wear ● |
| 1:5 | | 1 | Seal-Bs ● |
| 1:6 | | 1 | Ring-Wear ● |
| 1:7 | | 1 | Seal-Dust ● |
| 1:8 | | 1 | O-Ring ● |
| 2 | 117-9407 | 1 | Bushing-Connex |

● Not serviced separately

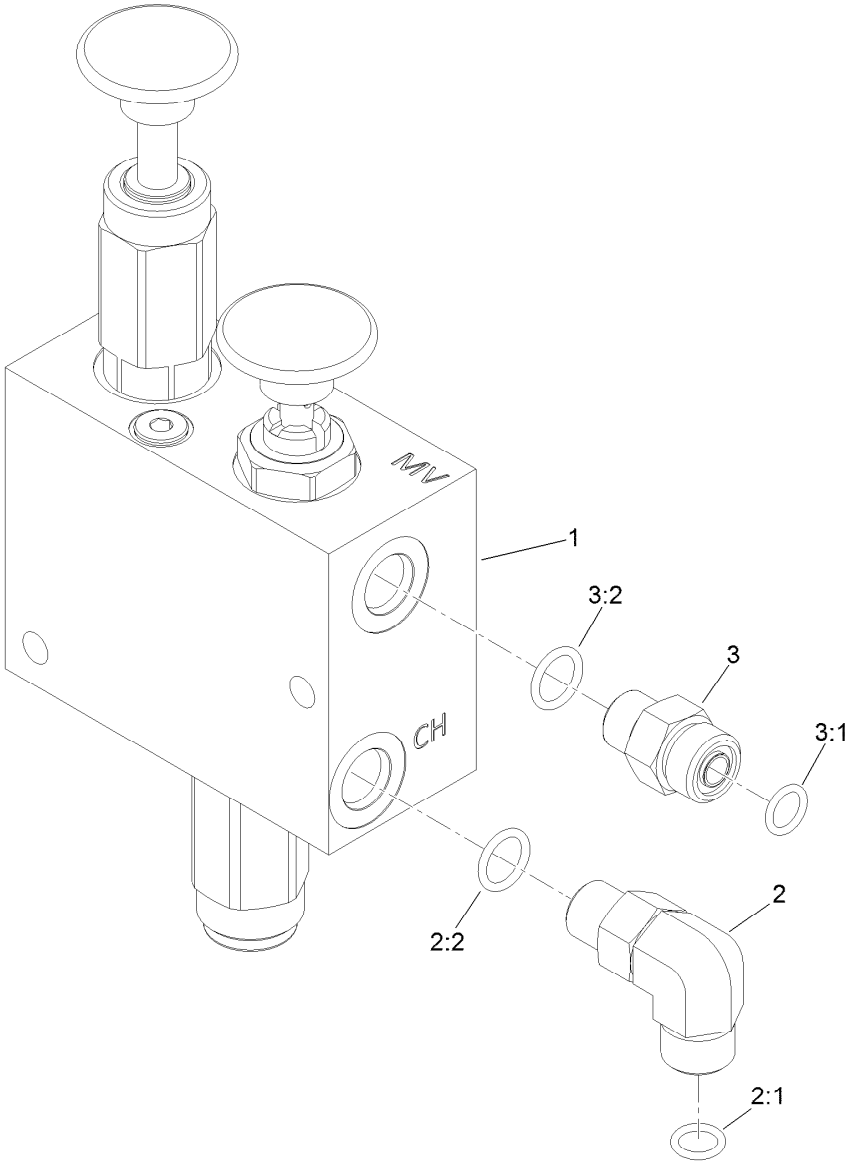


# Manual Parking Brake Manifold Assembly No. 132-1378

| *Ref.* | *Part Number* | *Qty.* | *Description* |
|---|---|---|---|
| 1 | 132-1399 | 1 | Manual Park Brake Manifold ASM |
| 2 | 340-77 | 1 | Fitting-Elbow, 90 DEG |
| 2:1 | 237-22 | 1 | O-Ring |
| 2:2 | 237-42 | 1 | O-Ring |
| 3 | 340-2 | 1 | Fitting-Straight |
| 3:1 | 237-22 | 1 | O-Ring |
| 3:2 | 237-42 | 1 | O-Ring |

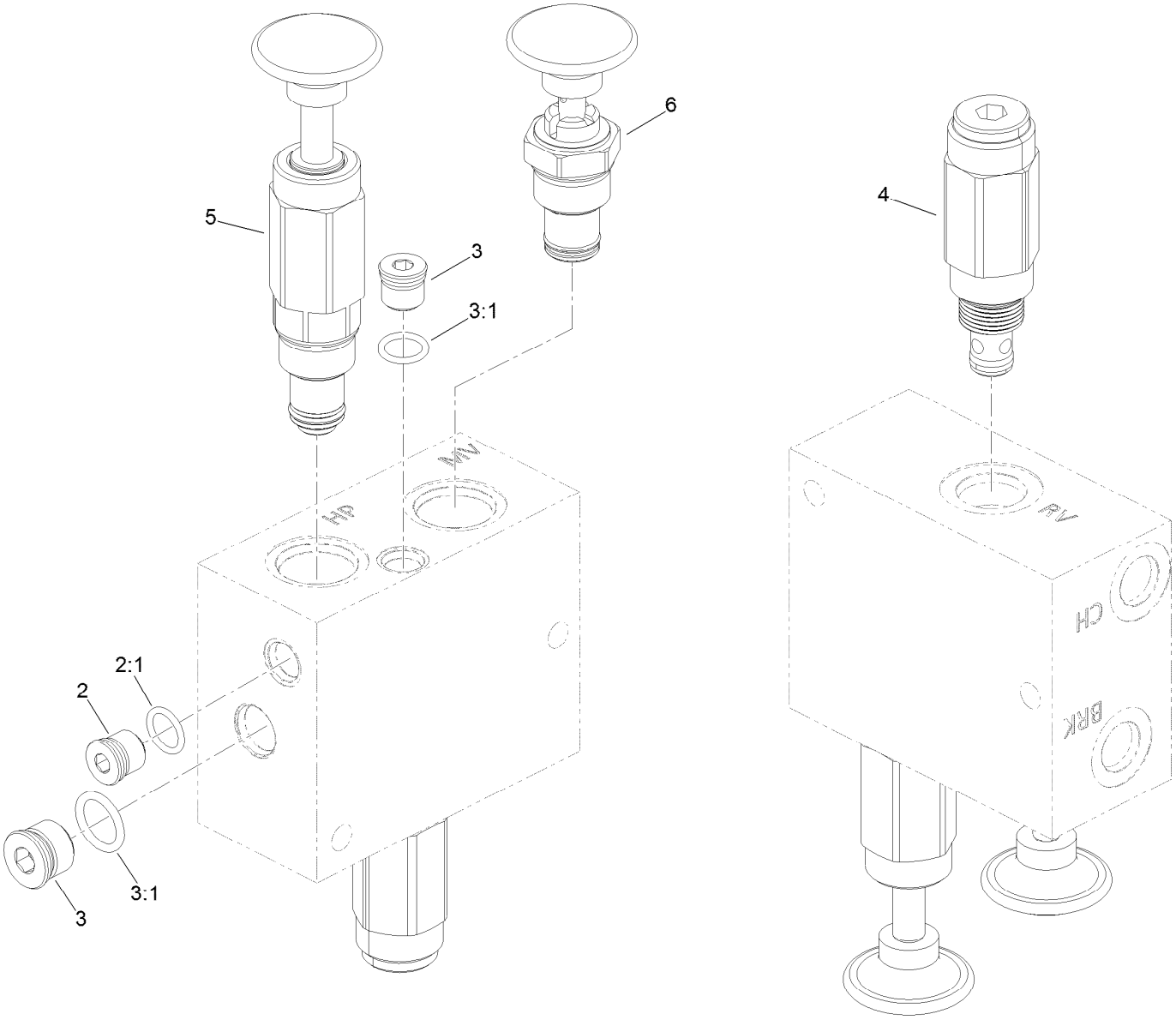


# Hydraulic Parking Brake Manifold Assembly No. 132-1399

| *Ref.* | *Part Number* | *Qty.* | *Description* |
|---|---|---|---|
| 2 | 353-989 | 1 | Plug-Hex, Hollow |
| 2:1 | 237-42 | 1 | O-Ring |
| 3 | 353-990 | 2 | Plug ASM |
| 3:1 | 237-78 | 1 | O-Ring |
| 4 | 132-4905 | 1 | Valve-Relief |
| 5 | 132-4904 | 1 | Pump-Hand |
| 6 | 132-4903 | 1 | Valve-2 Way, Manual |

# Hydraulic Steering Assembly

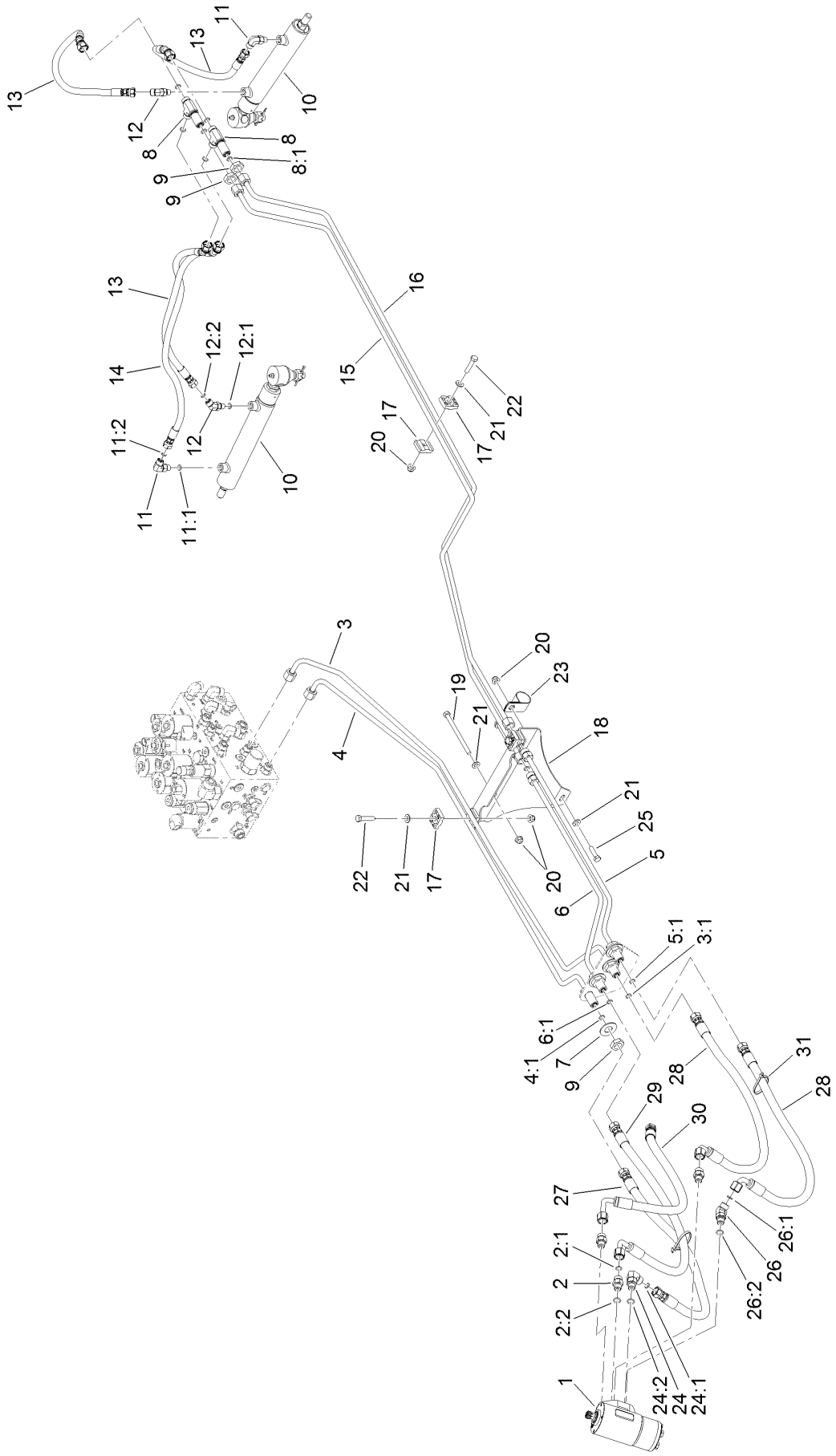

# Hydraulic Steering Assembly (continued)

| Ref. | Part Number | Qty. | Description |
|---|---|---|---|
| 1 | 132-6256 | 1 | Valve-Steer |
| 2 | 340-2 | 3 | Fitting-Straight |
| 2:1 | 237-22 | 1 | O-Ring |
| 2:2 | 237-42 | 1 | O-Ring |
| 3 | 139-0965 | 1 | Hydraulic Tube ASM |
| 3:1 | 237-22 | 1 | O-Ring |
| 4 | 139-0964 | 1 | Hydraulic Tube ASM |
| 4:1 | 237-22 | 1 | O-Ring |
| 5 | 139-0963 | 1 | Hydraulic Tube ASM |
| 5:1 | 237-22 | 2 | O-Ring |
| 6 | 139-0966 | 1 | Hydraulic Tube ASM |
| 6:1 | 237-22 | 2 | O-Ring |
| 7 | 69-8940 | 4 | Washer |
| 8 | 340-68 | 2 | Fitting-Tee, Bulkhead |
| 8:1 | 237-22 | 3 | O-Ring |
| 9 | 340-70 | 6 | Nut-Lock |
| 10 | 132-1308 | 2 | HYD Cylinder ASM |
| 11 | 340-132 | 2 | Fitting-Elbow, 90 DEG |
| 11:1 | 237-78 | 1 | O-Ring |
| 11:2 | 237-21 | 1 | O-Ring |
| 12 | 340-103 | 2 | Fitting-HYD, 45 DEG |
| 12:1 | 237-78 | 1 | O-Ring |
| 12:2 | 237-21 | 1 | O-Ring |

| Ref. | Part Number | Qty. | Description |
|---|---|---|---|
| 13 | 114-4922 | 3 | HYD Hose ASM |
| 14 | 114-4934 | 1 | HYD Hose ASM |
| 15 | 125-5352 | 1 | Hydraulic Tube ASM |
| 16 | 125-5353 | 1 | Hydraulic Tube ASM |
| 17 | 56-7973 | 6 | Clamp-Tube |
| 18 | 127-3492-0P | 1 | Support-Hardlines |
| 19 | 322-38 | 2 | Screw-HH |
| 20 | 104-8300 | 6 | Nut-HF, NI |
| 21 | 3256-23 | 6 | Washer-Plain |
| 22 | 322-7 | 3 | Screw-HH |
| 23 | 2412-82 | 1 | Clamp-R |
| 24 | 340-77 | 1 | Fitting-Elbow, 90 DEG |
| 24:1 | 237-22 | 1 | O-Ring |
| 24:2 | 237-42 | 1 | O-Ring |
| 25 | 322-6 | 1 | Screw-HH |
| 26 | 340-87 | 1 | Fitting-Elbow, 45 DEG |
| 26:1 | 237-22 | 1 | O-Ring |
| 26:2 | 237-42 | 1 | O-Ring |
| 27 | 139-0988 | 1 | Hose ASM |
| 28 | 139-0986 | 2 | Hose ASM |
| 29 | 139-0987 | 1 | Hose ASM |
| 30 | 139-0985 | 1 | Hose ASM |
| 31 | 3290-378 | 2 | Tie-Cable |

# Steering Valve Assembly No. 132-6256

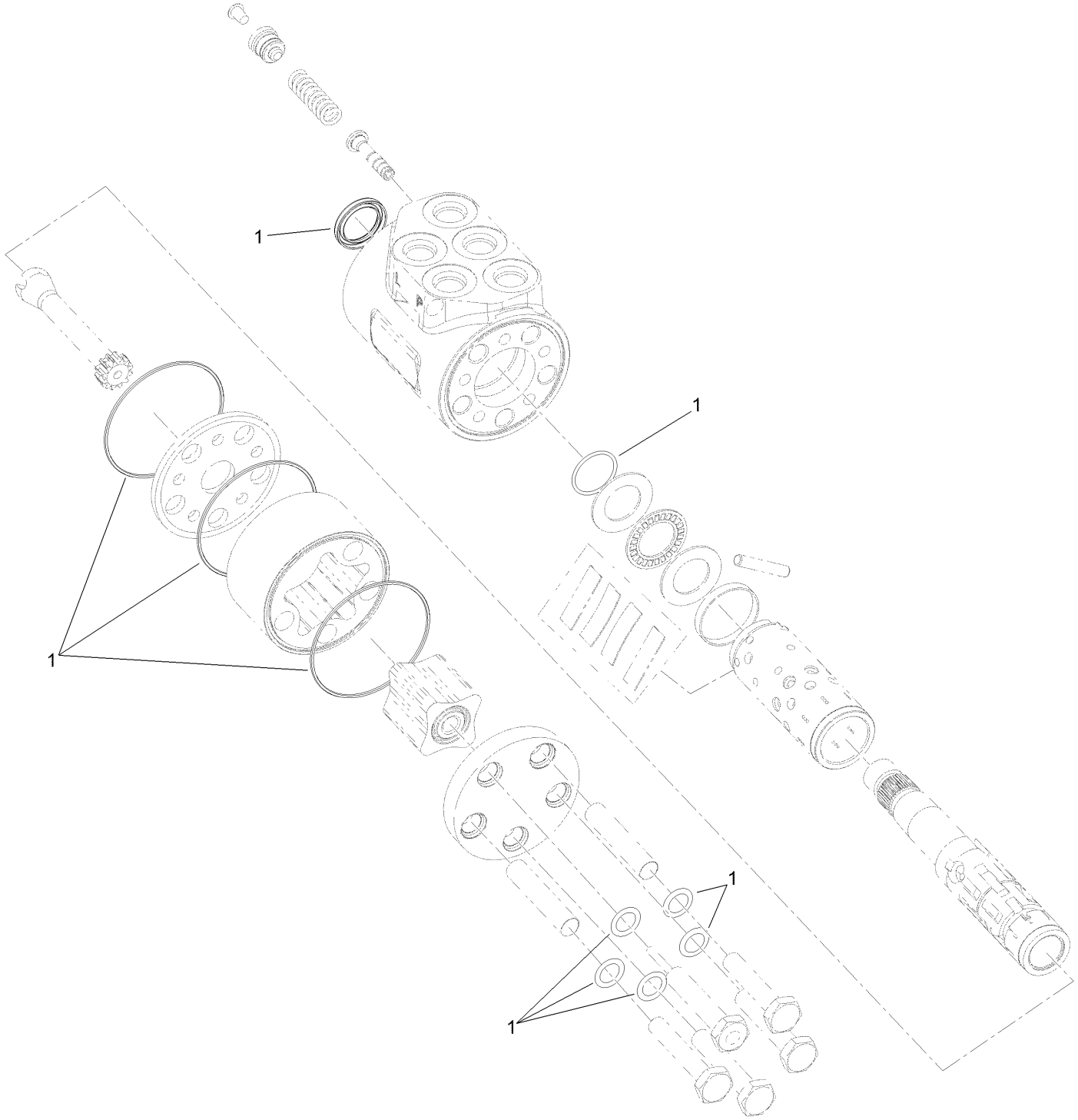

# Steering Valve Assembly No. 132-6256 (continued)

| Ref. | Part Number | Qty. | Description |
|---|---|---|---|
| 1 | 106-6716 | 1 | Seal Kit |

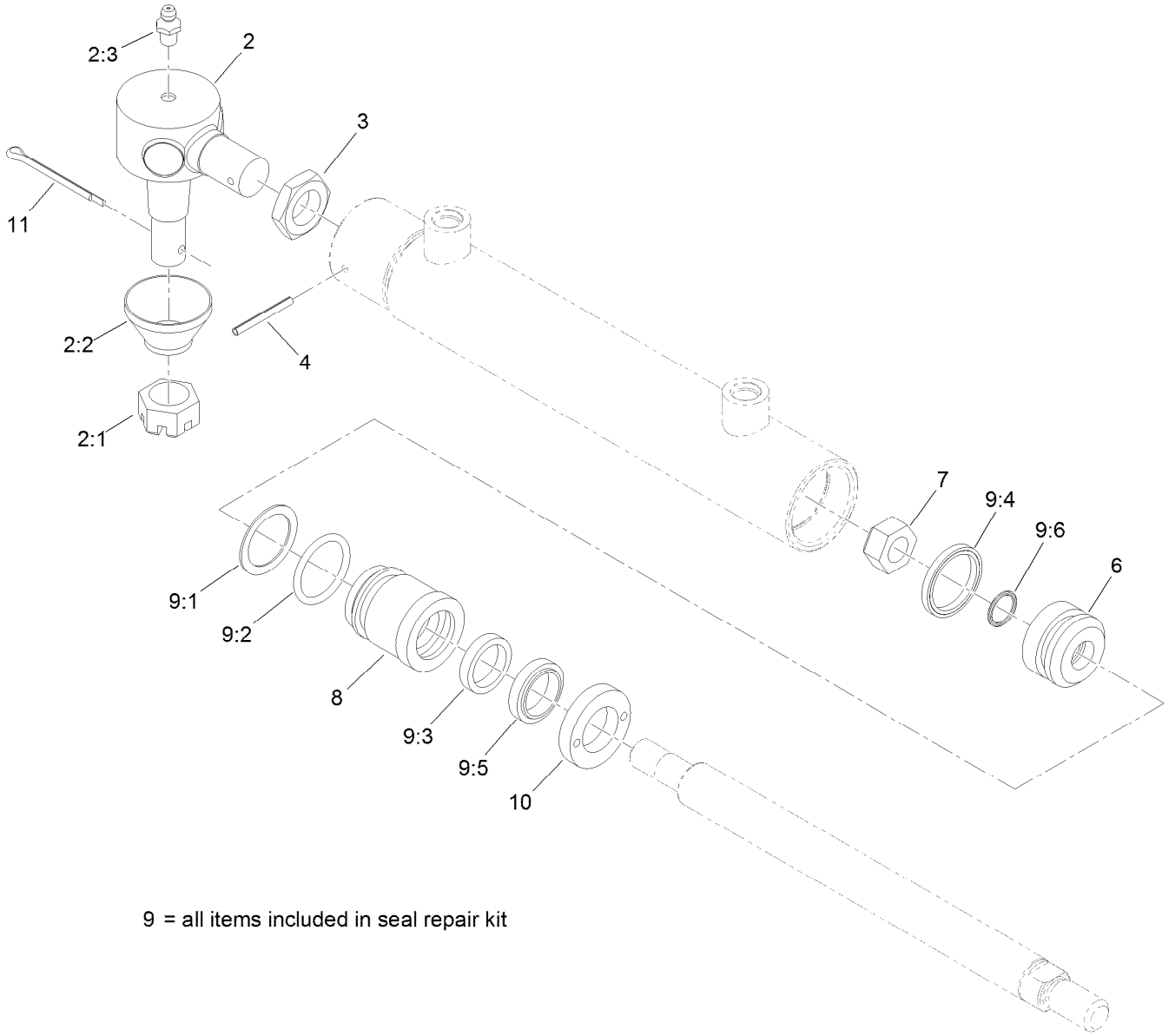


9 = all items included in seal repair kit

# Hydraulic Cylinder Assembly No. 132-1308

| Ref. | Part Number | Qty. | Description |
|---|---|---|---|
| 2 | 82-5730 | 1 | Tie Rod End ASM |
| 2:1 | 105-7941 | 1 | Nut-Hex, Slotted |
| 2:2 | 105-7835 | 1 | Seal |
| 2:3 | 302-5 | 1 | Fitting-Grease |
| 3 | 69-1980 | 1 | Nut-Jam |
| 4 | 32121-34 | 1 | Pin-Roll |
| 6 | 133-2476 | 1 | Piston |
| 7 | 133-2477 | 1 | Nut-Lock |
| 8 | 133-2478 | 1 | Head |

| Ref. | Part Number | Qty. | Description |
|---|---|---|---|
| 9 | 133-2479 | 1 | Seal Repair Kit |
| 9:1 | | 1 | O-Ring ● |
| 9:2 | | 1 | Ring-Backup ● |
| 9:3 | | 1 | Seal-Bt ● |
| 9:4 | | 1 | Seal-Psp ● |
| 9:5 | | 1 | Seal-Psp ● |
| 9:6 | | 1 | O-Ring ● |
| 10 | 133-2482 | 1 | Collar-Internal |
| 11 | 3272-12 | 1 | Pin-Cotter |

● Not serviced separately

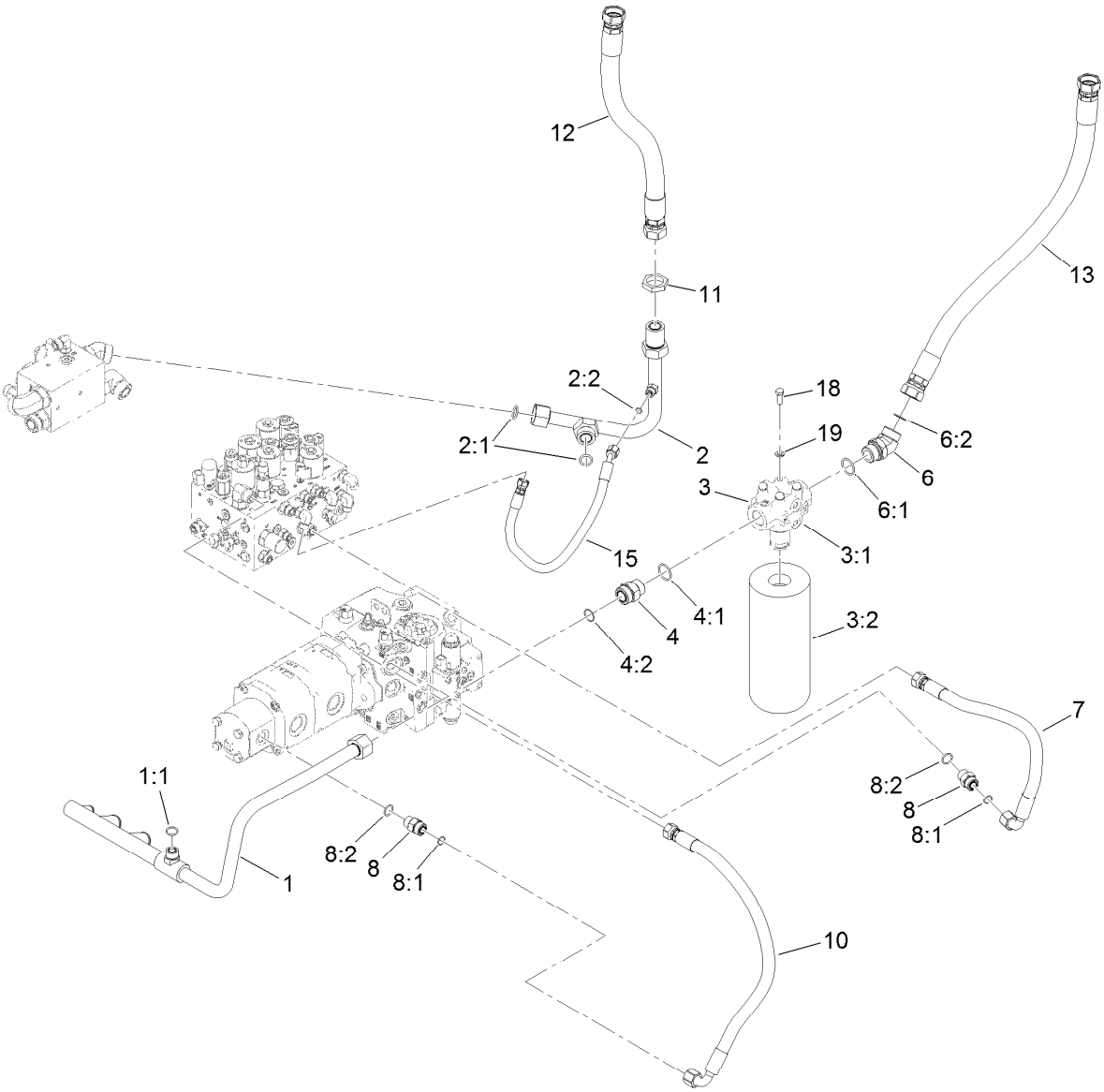


# Hydraulic Filter Manifold Assembly

| Ref. | Part Number | Qty. | Description |
|---|---|---|---|
| 1 | 130-2510 | 1 | Manifold-Suction |
| 1:1 | 237-65 | 1 | O-Ring |
| 2 | 130-2548 | 1 | Hydraulic Tube ASM |
| 2:1 | 340-65 | 2 | O-Ring |
| 2:2 | 237-22 | 1 | O-Ring |
| 3 | 132-1404 | 1 | Filter Head ASM |
| 3:1 | 125-5358 | 1 | Filter Head |
| 3:2 | 86-6110 | 1 | Filter-Hydraulic |
| 4 | 104-3797 | 1 | Fitting-Straight |
| 4:1 | 237-146 | 1 | O-Ring |
| 4:2 | 340-65 | 1 | O-Ring |
| 6 | 104-3509 | 1 | Fitting-HYD, 45 DEG |
| 6:1 | 237-146 | 1 | O-Ring |

| Ref. | Part Number | Qty. | Description |
|---|---|---|---|
| 6:2 | 340-65 | 1 | O-Ring |
| 7 | 127-3519 | 1 | Hydraulic Hose ASM |
| 8 | 340-7 | 2 | Fitting-Straight |
| 8:1 | 237-65 | 1 | O-Ring |
| 8:2 | 237-80 | 1 | O-Ring |
| 10 | 130-2544 | 1 | Hydraulic Hose ASM |
| 11 | 340-128 | 1 | Nut-Bulkhead |
| 12 | 130-2514 | 1 | Hydraulic Hose ASM |
| 13 | 125-5366 | 1 | Hydraulic Hose ASM |
| 15 | 131-2216 | 1 | Hydraulic Hose ASM |
| 18 | 323-6 | 4 | Screw-HH |
| 19 | 3253-21 | 4 | Washer-Lock |

# Side Panel and Bumper Assembly

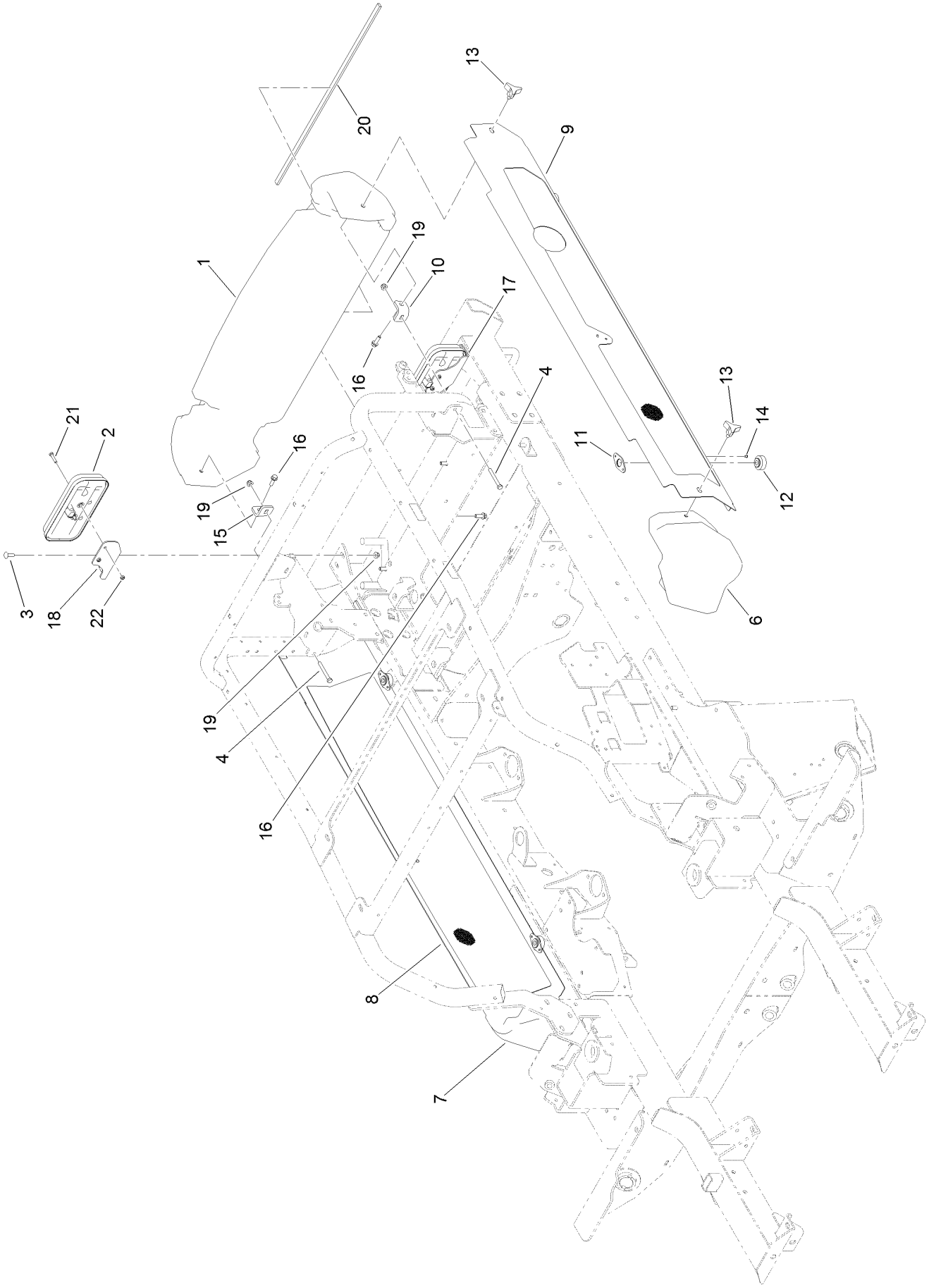

# Side Panel and Bumper Assembly (continued)

| Ref. | Part Number | Qty. | Description |
|---|---|---|---|
| 1 | 130-9028 | 1 | Shroud-Rear, Lower |
| 2 | 130-9137 | 2 | Taillight |
| 3 | 3230-22 | 4 | Screw-CARR |
| 4 | 322-12 | 2 | Screw-HH |
| 6 | 117-5456 | 1 | Shroud-Front, LH |
| 7 | 117-5457 | 1 | Shroud-Front, RH |
| 8 | 131-2390-03 | 1 | Panel-Side, RH |
| 9 | 131-2393-03 | 1 | Panel-Side, LH |
| 10 | 130-9046 | 1 | Bracket-Rear Shroud, LH |
| 11 | 114-5619 | 4 | Plate-Grommet |
| 12 | 114-4869 | 4 | Grommet |
| 13 | 92-9674 | 4 | Knob |
| 14 | 1-803035 | 8 | Rivet-Pop |
| 15 | 130-9047 | 1 | Bracket-Rear Shroud, RH |
| 16 | 3234-17 | 6 | Screw-HHF |
| 17 | 130-9051-03 | 1 | Bracket-Light, LH |
| 18 | 130-9031-03 | 1 | Bracket-Light, RH |
| 19 | 104-8300 | 6 | Nut-HF, NI |
| 20 | 131-2219 | 1 | Seal-Foam |
| 21 | 33113-030 | 4 | Screw-HH |
| 22 | 33023-00 | 4 | Nut-Lock |

# Hood Assembly

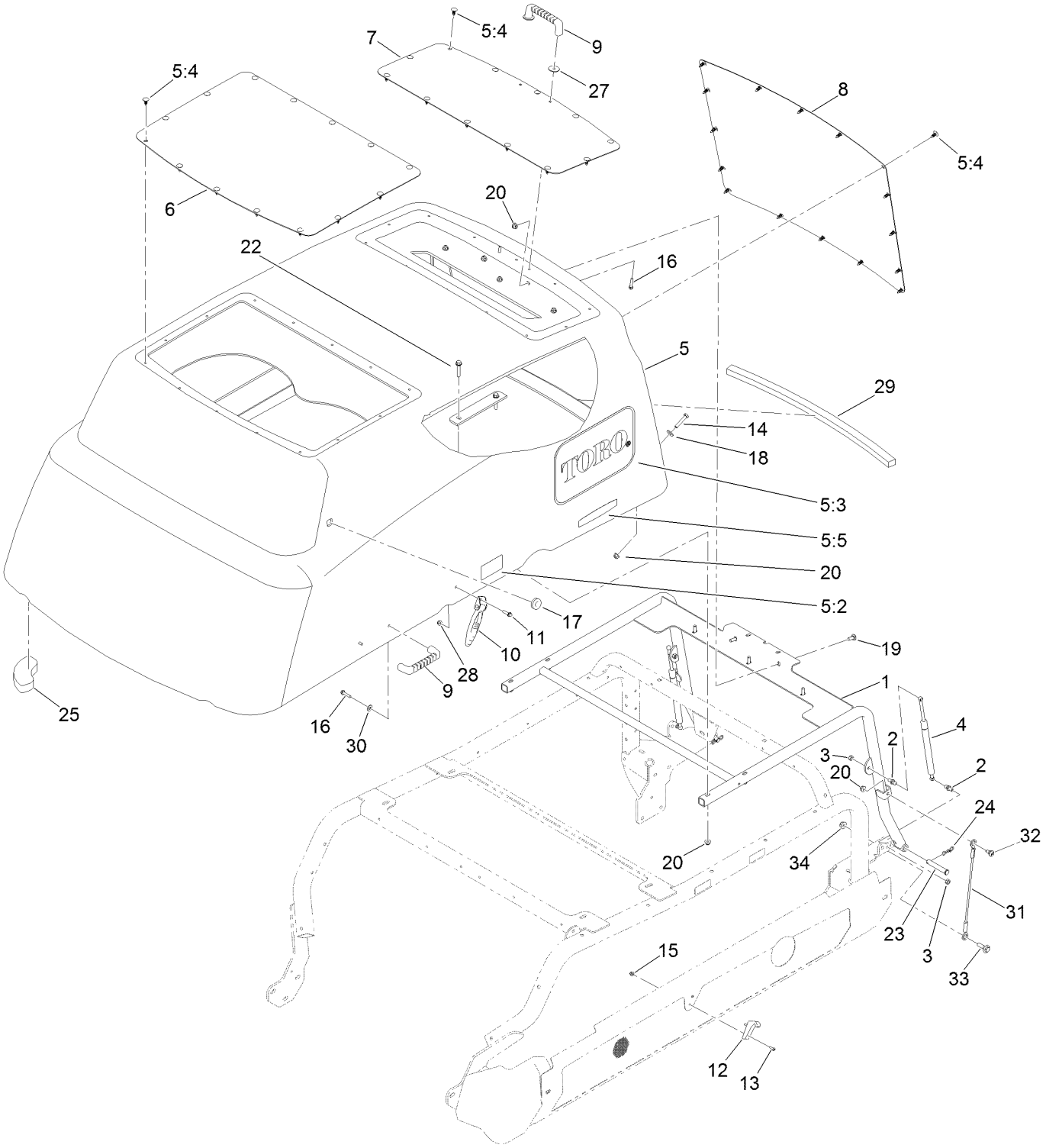

# Hood Assembly (continued)

| Ref. | Part Number | Qty. | Description |
|---|---|---|---|
| 1 | 130-9011-03 | 1 | Frame-Hood |
| 2 | 103-5752 | 4 | Stud-Ball |
| 3 | 32153-3 | 4 | Nut-Hex, Side Deform |
| 4 | 114-5532 | 2 | Cylinder-Gas |
| 5 | 132-1405 | 1 | Hood ASM |
| 5:2 | 106-6754 | 2 | Decal-Danger |
| 5:3 | 114-0990 | 2 | Decal |
| 5:4 | 117-2382 | 42 | Plug-Plastic |
| 5:5 | 121-1594 | 2 | Decal-Smart Power |
| 6 | 130-9008-03 | 1 | Screen-Cooler, Hood |
| 7 | 130-9009-03 | 1 | Screen-Air Intake, Hood |
| 8 | 130-9010-03 | 1 | Screen-Radiator, Hood |
| 9 | 65-5100 | 3 | Handle-Door |
| 10 | 103-2898 | 2 | Latch-Rubber |
| 11 | 120-4654 | 2 | Screw-HHF |
| 12 | 103-2897 | 2 | Latch-Catch |
| 13 | 3274-39 | 4 | Screw-HSBH |
| 14 | 322-9 | 2 | Screw-HH |
| 15 | 120-4578 | 4 | Nut-HF |
| 16 | 137-3101 | 6 | Screw-Plastic, HWH |
| 17 | 104-1453 | 1 | Grommet |
| 18 | 3256-3 | 2 | Washer-Flat |
| 19 | 3230-10 | 5 | Bolt-CARR |
| 20 | 104-8300 | 13 | Nut-HF, NI |
| 22 | 94-5780 | 4 | Screw-HWH |
| 23 | 283-55 | 2 | Pin-Clevis |
| 24 | 119-1416 | 2 | Pin-Cotter, Locking |
| 25 | 130-9019 | 2 | Foam-Hood, Corner |
| 27 | 3256-57 | 2 | Washer-Flat |
| 28 | 104-7201 | 2 | Nut-HF, NI |
| 29 | 131-2359 | 1 | Foam-Hood |
| 30 | 3256-2 | 4 | Washer-Flat |
| 31 | 130-5726 | 2 | Lanyard |
| 32 | 120-9471 | 2 | Bolt-Shoulder |
| 33 | 614672 | 2 | Screw-Shoulder, HWH |
| 34 | 104-8301 | 2 | Nut-HF, NI |

# Center Front Deck Connection Assembly

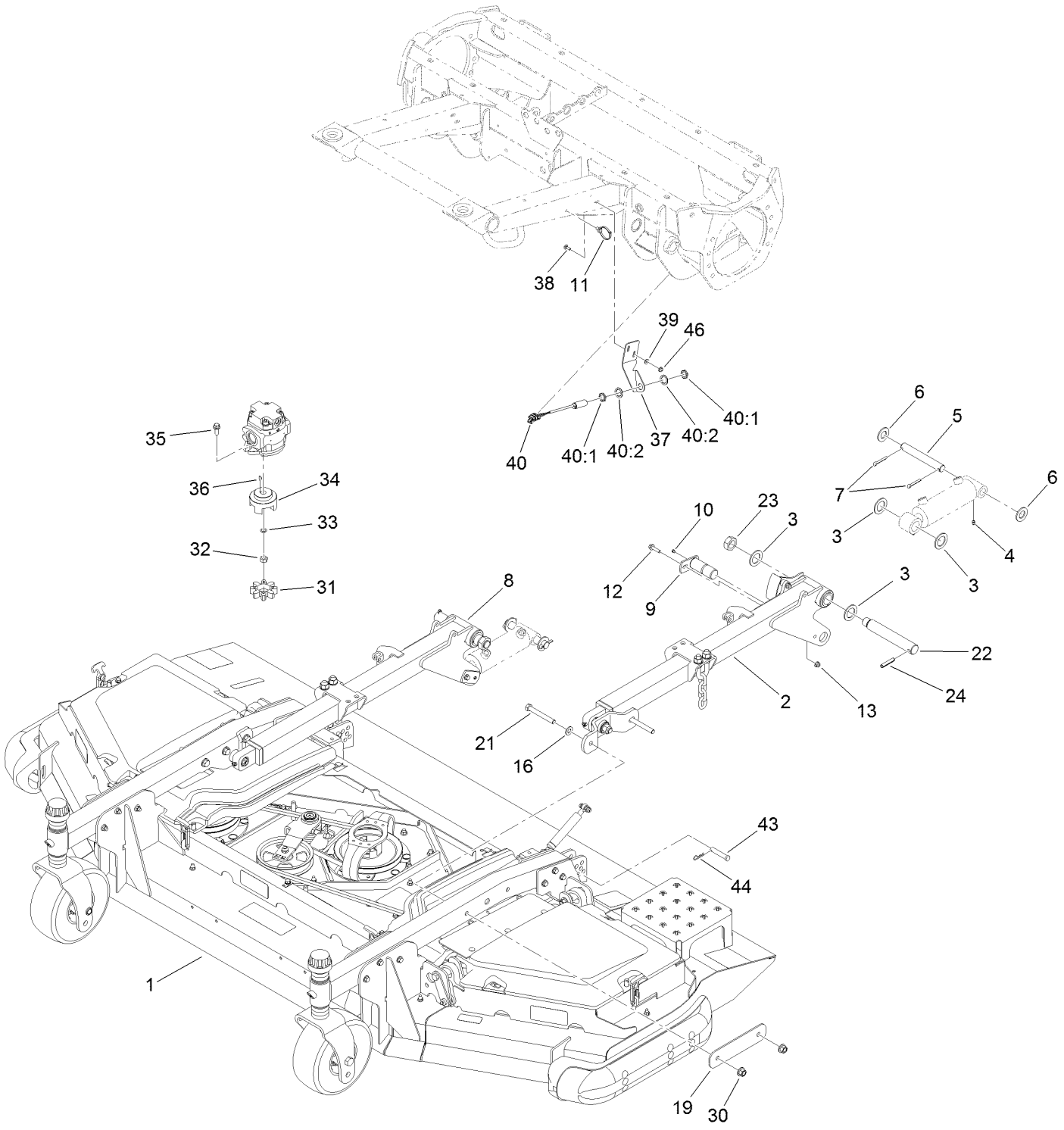

# Center Front Deck Connection Assembly (continued)

| Ref. | Part Number | Qty. | Description |
|---|---|---|---|
| 1 | | 1 | Front Center Deck ASM ● |
| 2 | 138-6368 | 1 | LH Front Lift Arm ASM |
| 3 | AU495-81203 | 8 | Washer |
| 4 | 302-5 | 4 | Fitting-Grease |
| 5 | 110-6006 | 2 | Pin-Clevis |
| 6 | 3256-29 | 4 | Washer-Flat |
| 7 | 3272-30 | 4 | Pin-Cotter |
| 8 | 138-6369 | 1 | RH Front Lift Arm ASM |
| 9 | 125-1912 | 2 | Pin-Pivot |
| 10 | 1-811010 | 2 | Plug |
| 11 | 32180-030 | 1 | Clip-Tie |
| 12 | 119-4036 | 2 | Screw-HHF |
| 13 | 104-8300 | 2 | Nut-HF, NI |
| 16 | 3256-26 | 4 | Washer-Flat |
| 19 | 130-9233-01 | 2 | Plate-Reinforcing |
| 21 | 325-17 | 4 | Screw-HH |
| 22 | 100-3017 | 2 | *obs Pin-Lift Arm |
| 23 | 3296-49 | 2 | Nut-Lock, NI |
| 24 | 32121-110 | 2 | Pin-Roll, Slotted |
| 30 | 99-5107 | 4 | Nut-Lock |
| 31 | 104-3542 | 1 | Spider |
| 32 | 110-8815 | 1 | Nut-Hex |
| 33 | 112-6957 | 1 | Washer-Hardened |
| 34 | 104-3541 | 1 | Hub-Spider |
| 35 | 3234-42 | 2 | Screw-HHF |
| 36 | 3257-3 | 1 | Key-Woodruff |
| 37 | 133-2234-01 | 1 | Bracket-Sensor, Front |
| 38 | 3229-1 | 2 | Screw-CARR |
| 39 | 3256-22 | 2 | Washer-Flat |
| 40 | 115-5300 | 1 | Proximity Switch ASM |
| 40:1 | 117-3207 | 2 | Nut-Hex |
| 40:2 | 117-3208 | 2 | Washer-Lock, Internal Tooth |
| 43 | 92-2743 | 2 | Pin-Clevis |
| 44 | 3290-467 | 2 | Pin-Hair |
| 46 | 104-7201 | 2 | Nut-HF, NI |

● Not serviced separately

# LH Front Lift Arm Assembly No. 138-6368

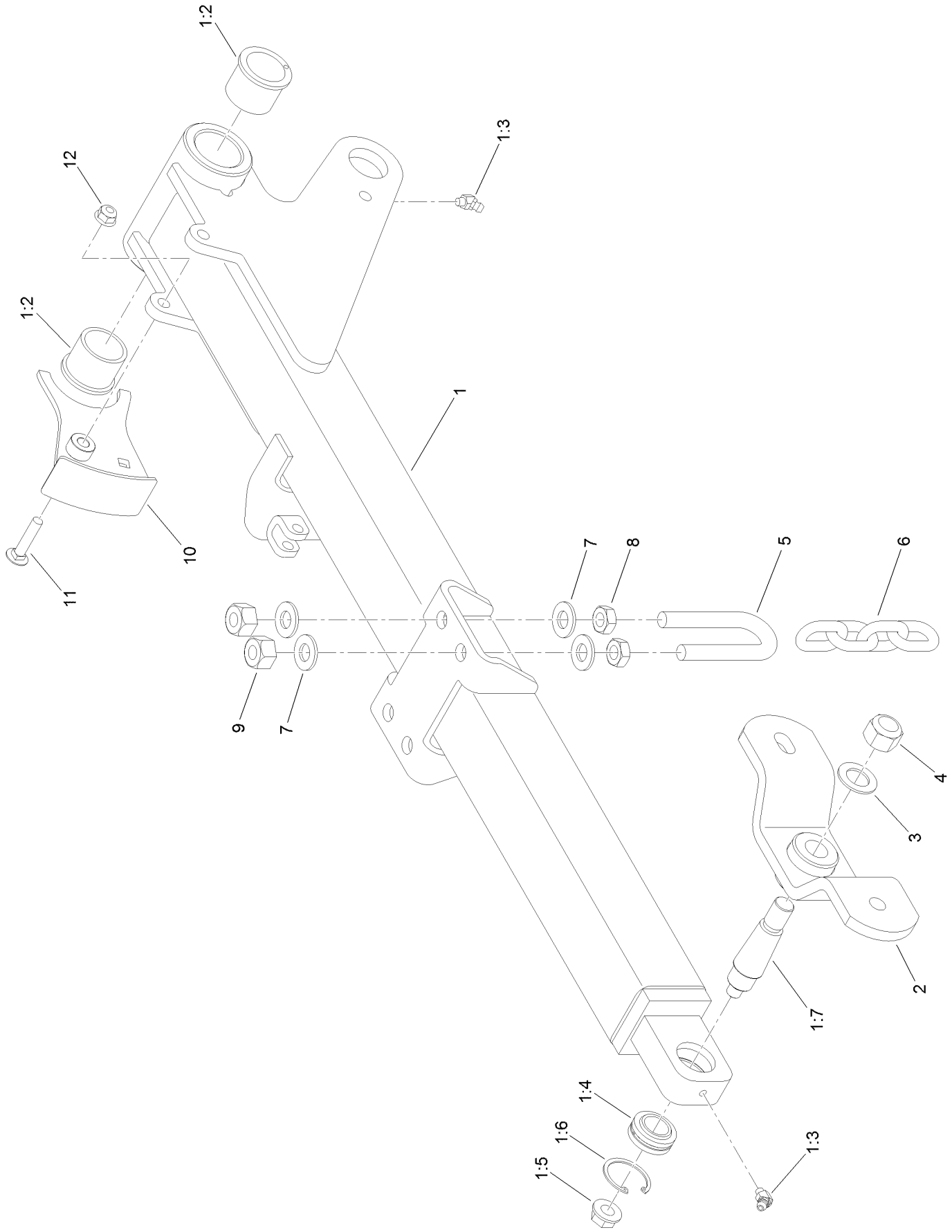

# LH Front Lift Arm Assembly No. 138-6368 (continued)

| Ref. | Part Number | Qty. | Description |
|---|---|---|---|
| 1 | 139-7837 | 1 | LH Lift Arm ASM |
| 1:2 | 104-0015 | 2 | Bushing-Flange |
| 1:3 | 302-11 | 2 | Fitting-Lube, 45 DEG |
| 1:4 | 105-7441 | 1 | Bearing-Spherical |
| 1:5 | 32128-42 | 1 | Nut-HF |
| 1:6 | 32151-34 | 1 | Ring-Retaining |
| 1:7 | 105-7468 | 1 | Stud-Tapered |
| 2 | 137-3581-01 | 1 | Hub Support ASM |
| 3 | 86-1440 | 1 | Washer-Flat |
| 4 | 3296-41 | 1 | Nut-Lock NI |
| 5 | 104-0108 | 1 | U-Bolt |
| 6 | 95-6231 | 1 | Chain-HOC |
| 7 | 3256-26 | 4 | Washer-Flat |
| 8 | 3218-5 | 2 | Nut-Jam |
| 9 | 3296-25 | 2 | Nut-Lock, NI |
| 10 | 139-7770 | 1 | Trigger-Sensor |
| 11 | 3230-4 | 1 | Bolt-CARR |
| 12 | 104-8300 | 1 | Nut-HF, NI |

# RH Front Lift Arm Assembly No. 138-6369

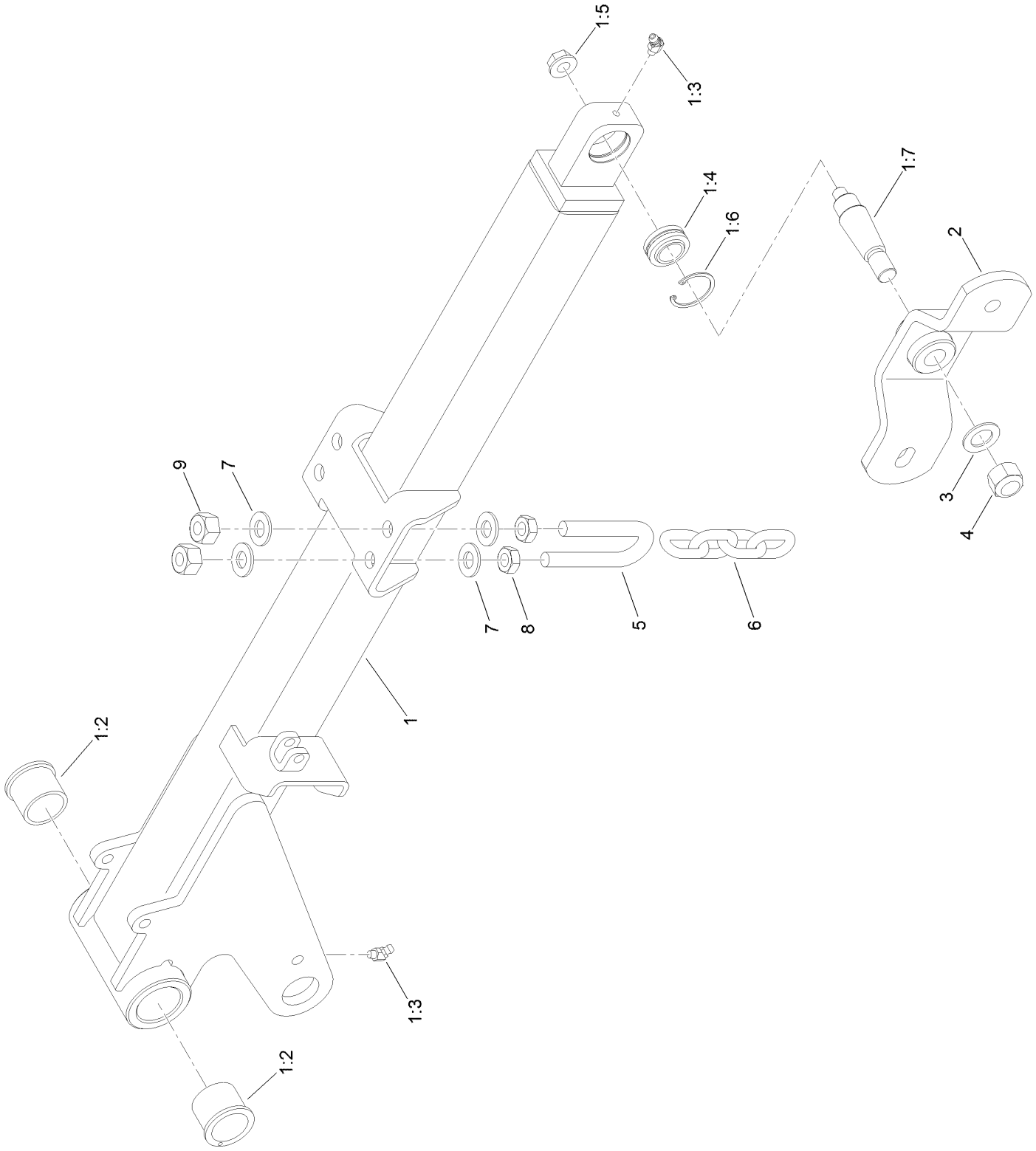

# RH Front Lift Arm Assembly No. 138-6369 (continued)

| Ref. | Part Number | Qty. | Description |
|---|---|---|---|
| 1 | 139-7847 | 1 | RH Lift Arm ASM |
| 1:2 | 104-0015 | 2 | Bushing-Flange |
| 1:3 | 302-11 | 2 | Fitting-Lube, 45 DEG |
| 1:4 | 105-7441 | 1 | Bearing-Spherical |
| 1:5 | 32128-42 | 1 | Nut-HF |
| 1:6 | 32151-34 | 1 | Ring-Retaining |
| 1:7 | 105-7468 | 1 | Stud-Tapered |
| 2 | 137-3581-01 | 1 | Hub Support ASM |
| 3 | 86-1440 | 1 | Washer-Flat |
| 4 | 3296-41 | 1 | Nut-Lock NI |
| 5 | 104-0108 | 1 | U-Bolt |
| 6 | 95-6231 | 1 | Chain-HOC |
| 7 | 3256-26 | 4 | Washer-Flat |
| 8 | 3218-5 | 2 | Nut-Jam |
| 9 | 3296-25 | 2 | Nut-Lock, NI |

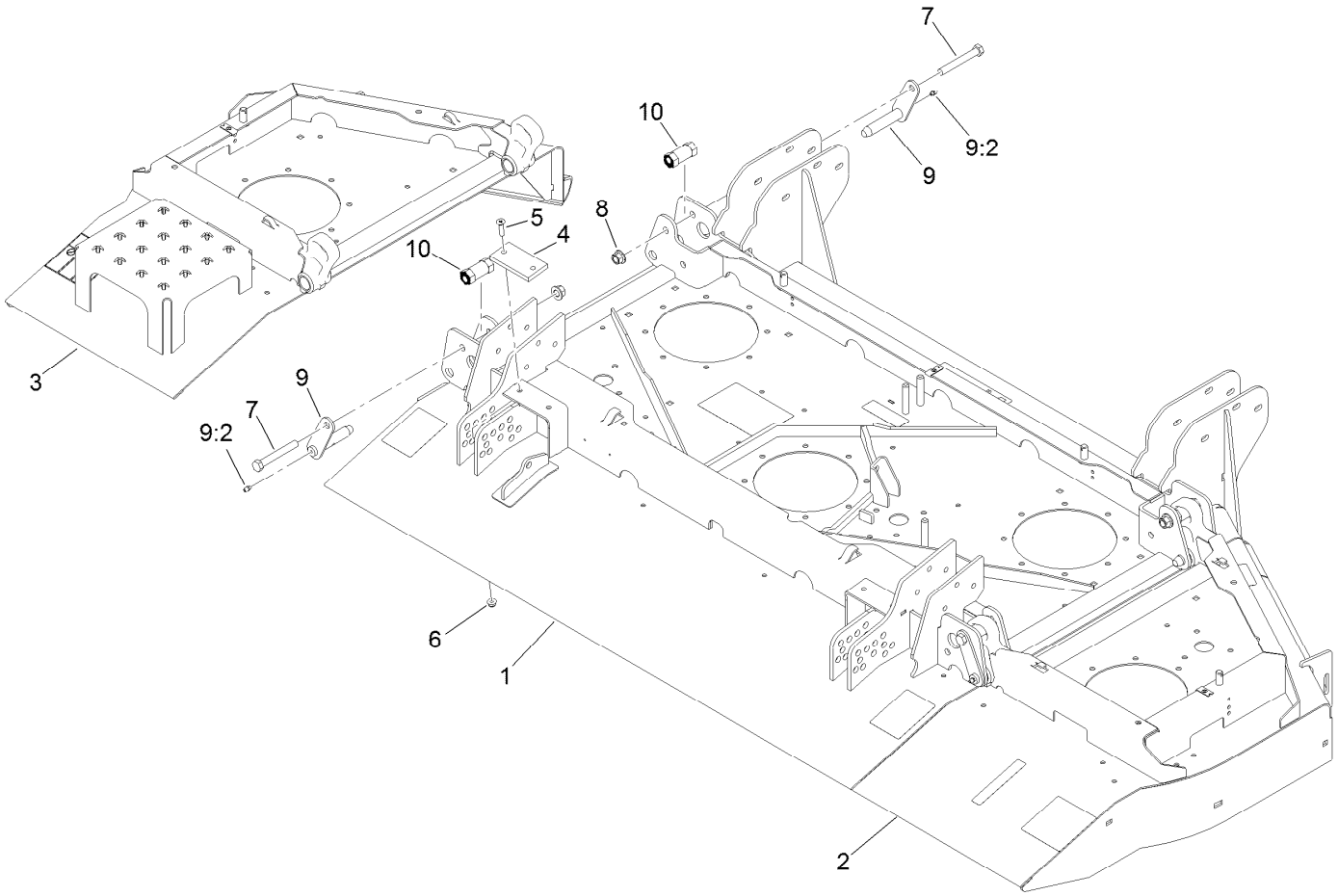


# Center Front and Winglet Deck Assembly

| *Ref.* | *Part Number* | *Qty.* | *Description* |
|---|---|---|---|
| 1 | 130-9201 | 1 | Center Front Deck ASM |
| 2 | 130-9218 | 1 | Right Front Deck ASM |
| 3 | 130-9210 | 1 | Left Front Deck ASM |
| 4 | 69-9300 | 2 | Pad-Bumper |
| 5 | 32108-103 | 4 | Screw-FH |
| 6 | 104-8300 | 4 | Nut-HF, NI |
| 7 | 325-35 | 4 | Screw-HH |
| 8 | 99-5107 | 4 | Nut-Lock |
| 9 | 138-6469 | 4 | Pin ASM |
| 9:2 | 302-5 | 1 | Fitting-Grease |
| 10 | 115-3367 | 4 | Eccentric |

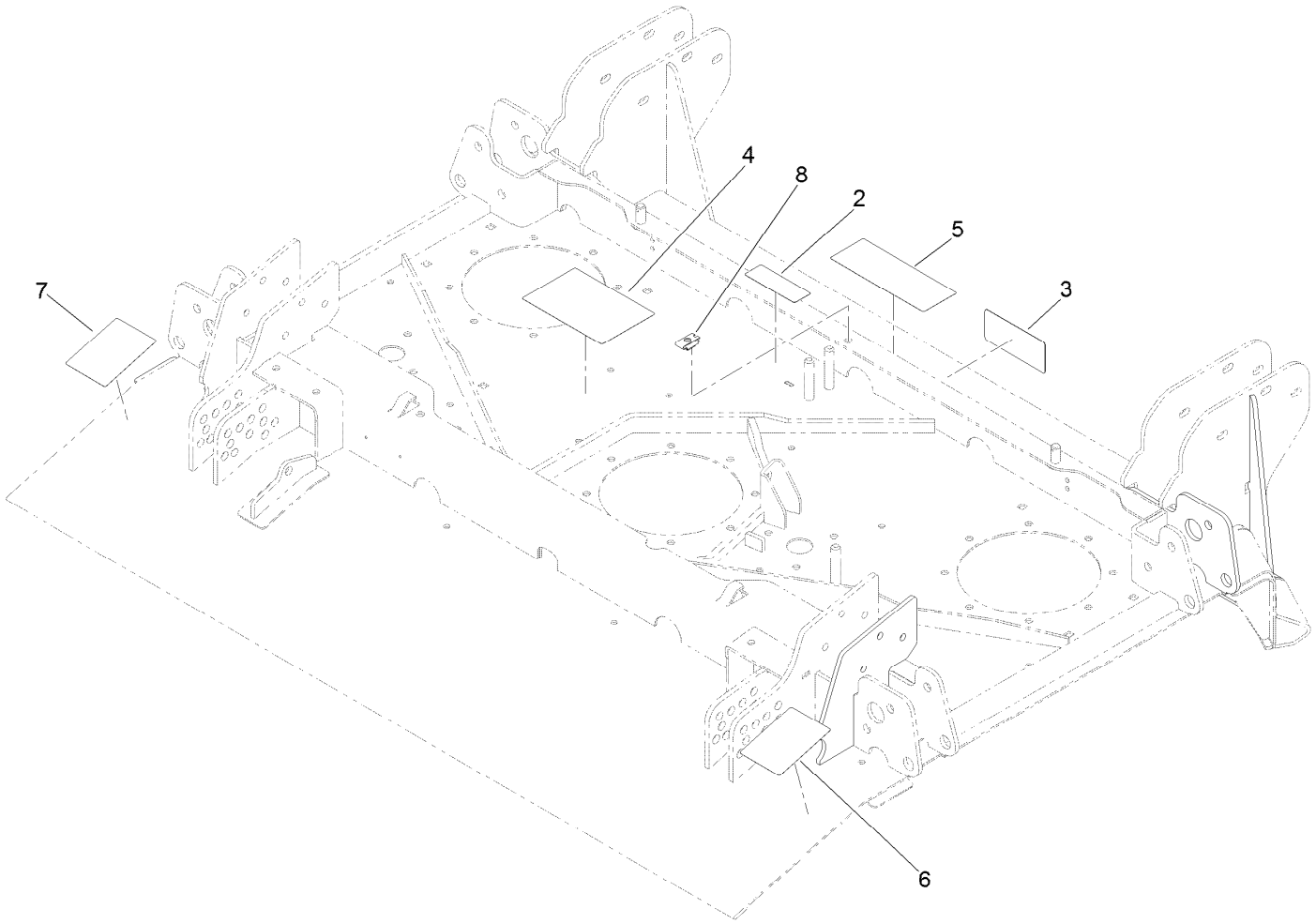


# Center Front Deck and Decal Assembly No. 130-9201

| *Ref.* | *Part Number* | *Qty.* | *Description* |
|---|---|---|---|
| 2 | 117-4979 | 1 | Decal-Warning |
| 3 | 93-7818 | 1 | Decal-Torque, Blade Bolt |
| 4 | 114-0922 | 1 | Decal-Belt Routing |
| 5 | 131-6027 | 1 | Decal-HOC |
| 6 | 131-6026 | 1 | Decal-Rear HOC, RH |
| 7 | 131-6025 | 1 | Decal-Rear HOC, LH |
| 8 | 110-3510 | 1 | Nut-Retainer |

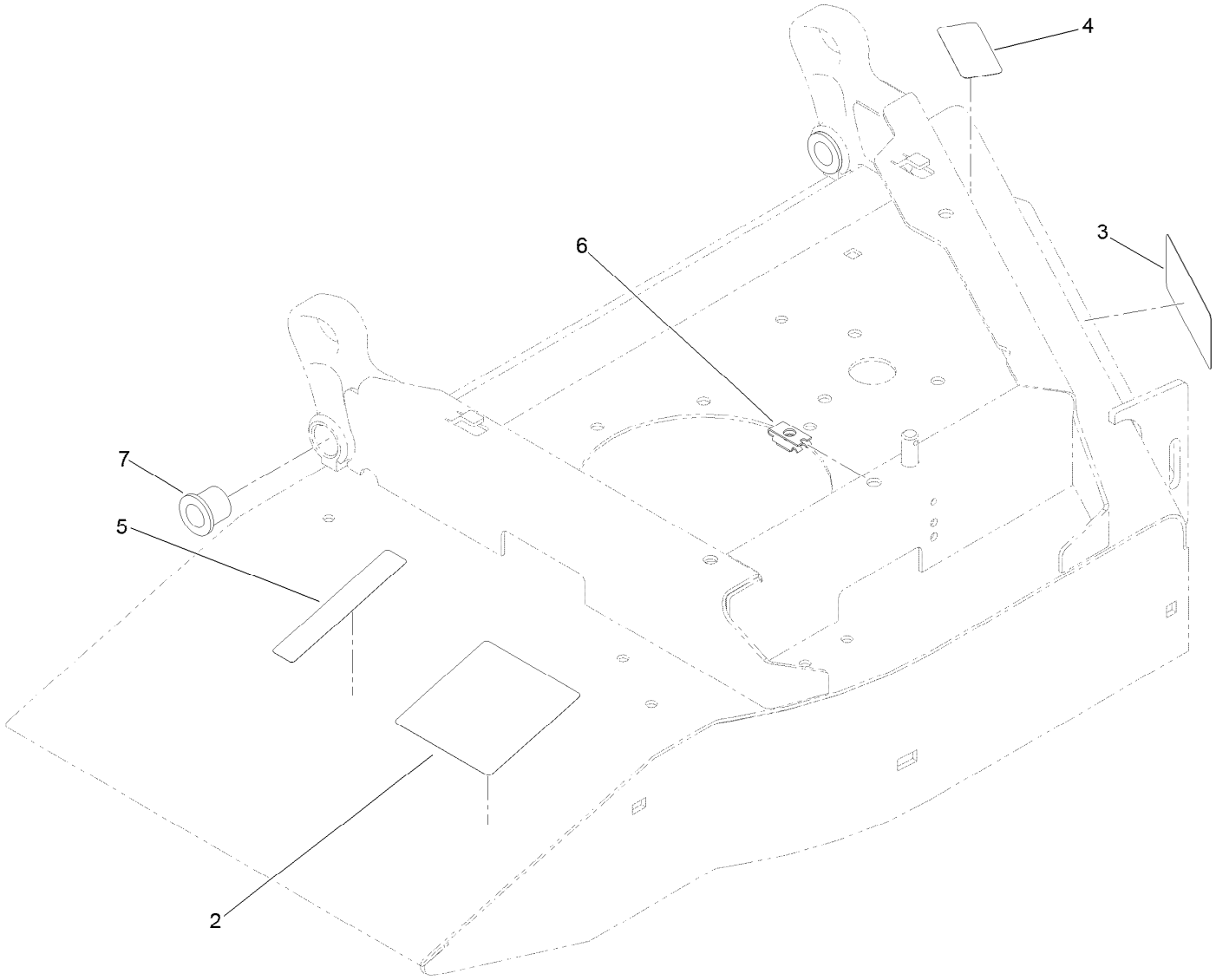


# Right Front Deck and Decal Assembly No. 130-9218

| *Ref.* | *Part Number* | *Qty.* | *Description* |
|---|---|---|---|
| 2 | 120-6604 | 1 | Decal-Danger |
| 3 | 93-7818 | 1 | Decal-Torque, Blade Bolt |
| 4 | 93-6674 | 1 | Decal-Warning |
| 5 | 93-6687 | 1 | Decal-No Step |
| 6 | 110-3510 | 1 | Nut-Retainer |
| 7 | 92-3162 | 4 | Bushing |

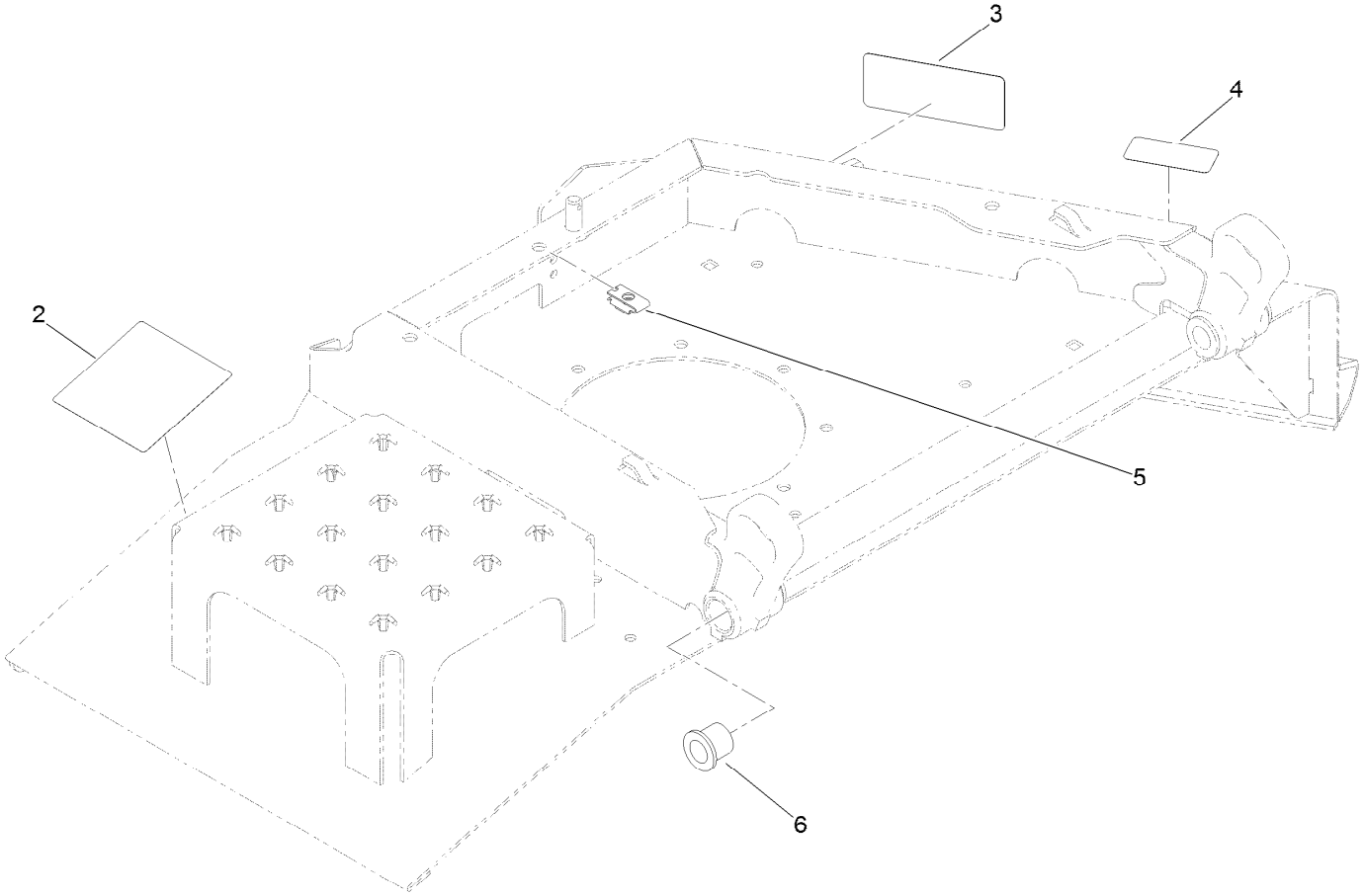


# Left Front Deck and Decal Assembly No. 130-9210

| *Ref.* | *Part Number* | *Qty.* | *Description* |
|---|---|---|---|
| 2 | 120-6604 | 1 | Decal-Danger |
| 3 | 93-7818 | 1 | Decal-Torque, Blade Bolt |
| 4 | 93-6674 | 1 | Decal-Warning |
| 5 | 110-3510 | 1 | Nut-Retainer |
| 6 | 92-3162 | 4 | Bushing |

# Center Deck Belt, Pulley and Spindle Assembly

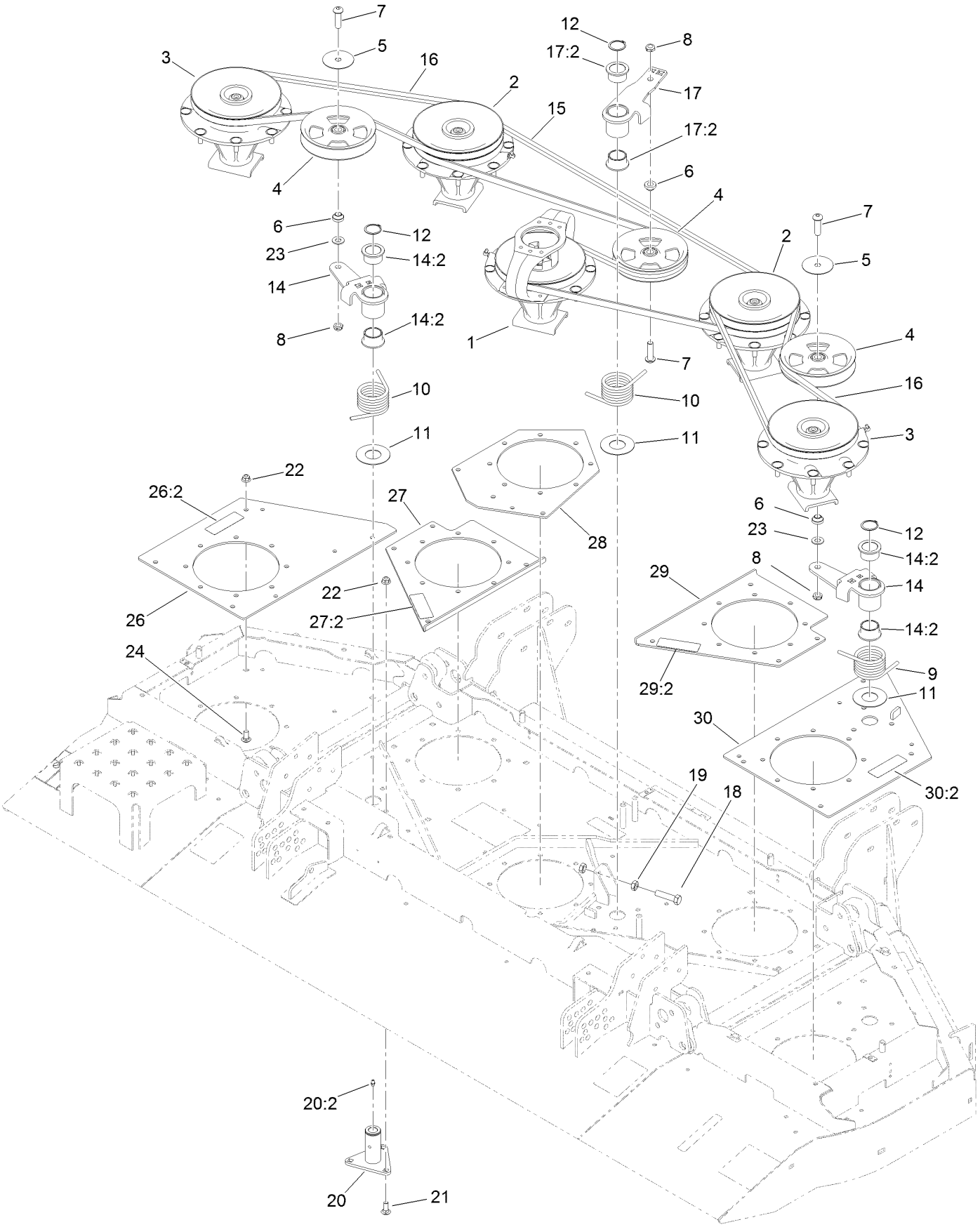

# Center Deck Belt, Pulley and Spindle Assembly (continued)

| Ref. | Part Number | Qty. | Description |
|---|---|---|---|
| 1 | 139-1034 | 1 | Single Driving Spindle ASM |
| 2 | 139-1033 | 2 | Double Driven Spindle ASM |
| 3 | 139-1032 | 2 | High Driven Spindle ASM |
| 4 | 132-9421 | 3 | Pulley-Idler, Flat |
| 5 | 100-3102 | 2 | Washer-Flat |
| 6 | 108-1924 | 3 | Spacer-Idler |
| 7 | 108-1993 | 3 | Screw-HSBH |
| 8 | 3296-45 | 3 | Nut-Hex |
| 9 | 108-1921 | 1 | Spring-Torsion |
| 10 | 112-7395 | 2 | Spring-Torsion |
| 11 | 108-1926 | 3 | Washer |
| 12 | 32120-84 | 3 | Ring-Snap, External |
| 14 | 117-9176 | 2 | Idler Arm ASM |
| 14:2 | 93-4510 | 2 | Bushing-Caster |
| 15 | 112-7376 | 1 | Belt-V, B |
| 16 | 112-7377 | 2 | Belt-V, B |
| 17 | 114-0100 | 1 | High Idler Arm ASM |
| 17:2 | 93-4510 | 2 | Bushing-Caster |

| Ref. | Part Number | Qty. | Description |
|---|---|---|---|
| 18 | 01-182-0816 | 1 | Bolt-HH |
| 19 | 3218-5 | 2 | Nut-Jam |
| 20 | 137-5640 | 3 | Idler Pivot ASM |
| 20:2 | 302-5 | 1 | Fitting-Grease |
| 21 | 3231-2 | 9 | Bolt-CARR |
| 22 | 104-8301 | 28 | Nut-HF, NI |
| 23 | 3256-26 | 2 | Washer-Flat |
| 24 | 3231-27 | 19 | Screw-CARR |
| 26 | 132-1611 | 1 | LH Spindle Plate ASM |
| 26:2 | 117-4979 | 1 | Decal-Warning |
| 27 | 132-1608 | 1 | Left Spindle Plate ASM |
| 27:2 | 117-4979 | 1 | Decal-Warning |
| 28 | 132-1602-01 | 1 | Plate-Spindle, Center |
| 29 | 132-1607 | 1 | Right Spindle Plate ASM |
| 29:2 | 117-4979 | 1 | Decal-Warning |
| 30 | 132-1609 | 1 | RH Spindle Plate ASM |
| 30:2 | 117-4979 | 1 | Decal-Warning |

# Single Driving Spindle Assembly No. 139-1034

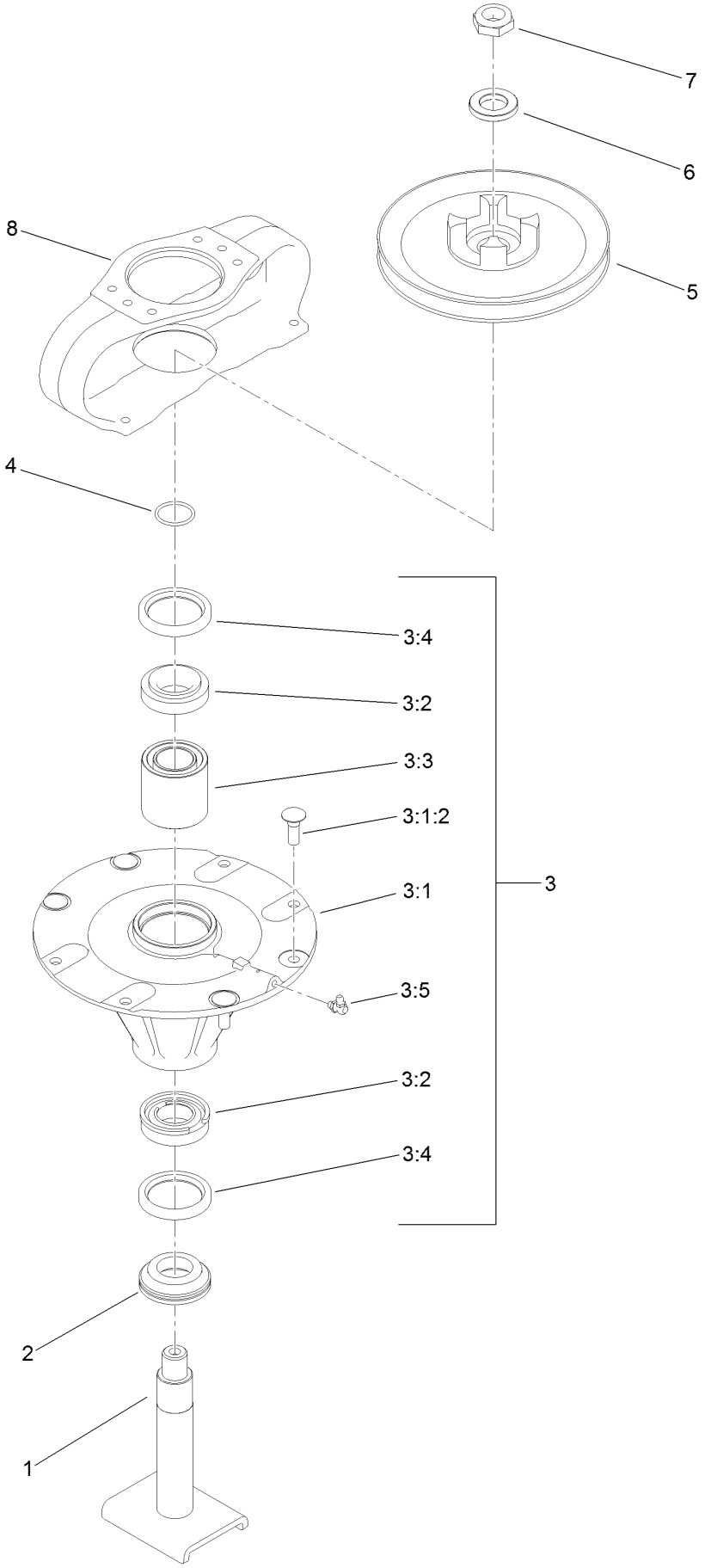

# Single Driving Spindle Assembly No. 139-1034 (continued)

| Ref. | Part Number | Qty. | Description |
|---|---|---|---|
| 1 | 139-1042 | 1 | Spindle-Shaft |
| 2 | 138-6416 | 1 | Spacer-Spindle, Shaft |
| 3 | 131-0767 | 1 | Spindle Housing ASM |
| 3:1 | | 1 | Spindle ASM ● |
| 3:1:2 | 114-8195 | 4 | Bolt-Neck, Ribbed |
| 3:2 | 110-8297 | 1 | Bearing ASM |
| 3:3 | 108-1954 | 1 | Bearing Spacer Set |
| 3:4 | 253-154 | 2 | Seal-Oil |
| 3:5 | 302-60 | 1 | Fitting-Grease |
| 4 | 106-7159 | 1 | O-Ring |
| 5 | 104-3545 | 1 | Pulley-Driving |
| 6 | 120-5576 | 1 | Washer-Hardened |
| 7 | 3296-60 | 1 | Nut-Lock, NI |
| 8 | 104-3544 | 1 | Mount-Motor, Drive |

● Not serviced separately

# Double Driven Spindle Assembly No. 139-1033

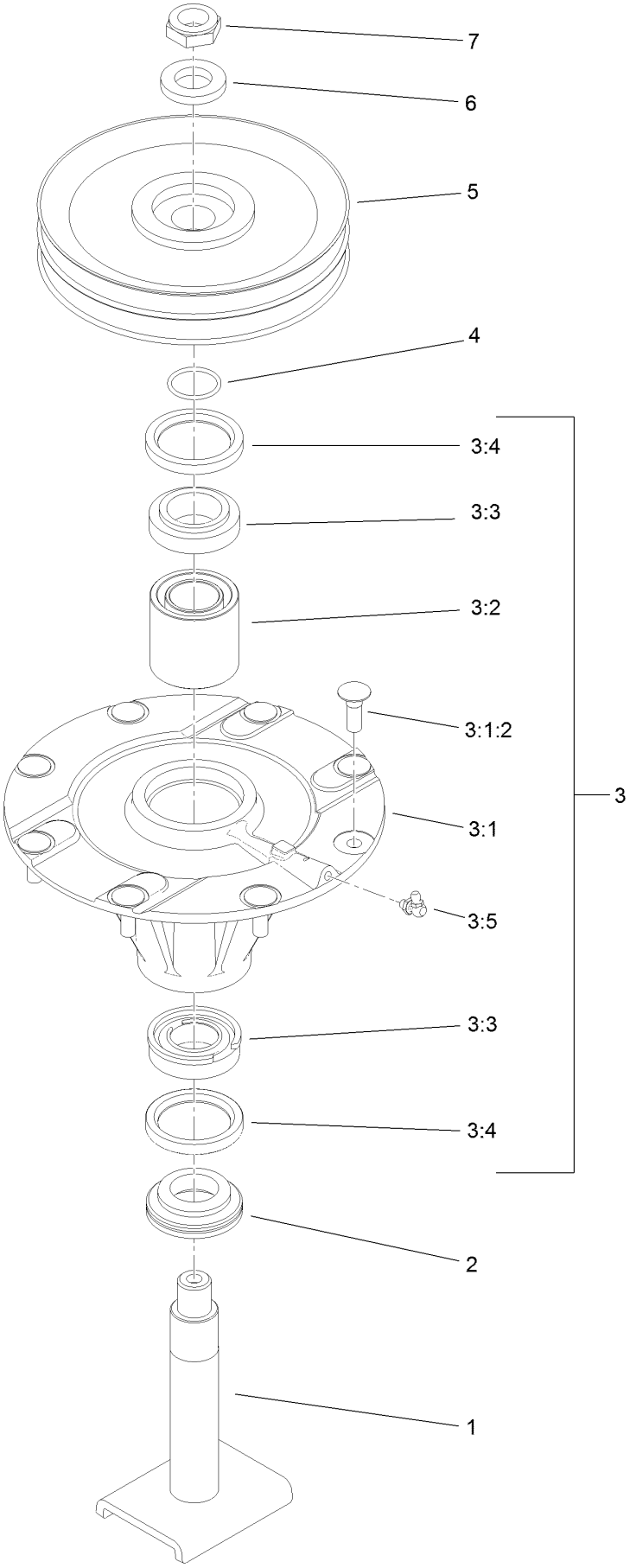

# Double Driven Spindle Assembly No. 139-1033 (continued)

| Ref. | Part Number | Qty. | Description |
|---|---|---|---|
| 1 | 139-1042 | 1 | Spindle-Shaft |
| 2 | 138-6416 | 1 | Spacer-Spindle, Shaft |
| 3 | 119-4777 | 1 | Spindle ASM |
| 3:1 | | 1 | Spindle ASM ● |
| 3:1:2 | 114-8195 | 8 | Bolt-Neck, Ribbed |
| 3:2 | 108-1954 | 1 | Bearing Spacer Set |
| 3:3 | 110-8297 | 1 | Bearing ASM |
| 3:4 | 253-154 | 2 | Seal-Oil |
| 3:5 | 302-60 | 1 | Fitting-Grease |
| 4 | 106-7159 | 1 | O-Ring |
| 5 | 104-3547 | 1 | Pulley-Driven, Double |
| 6 | 120-5576 | 1 | Washer-Hardened |
| 7 | 3296-60 | 1 | Nut-Lock, NI |

● Not serviced separately

# High Driven Spindle Assembly No. 139-1032

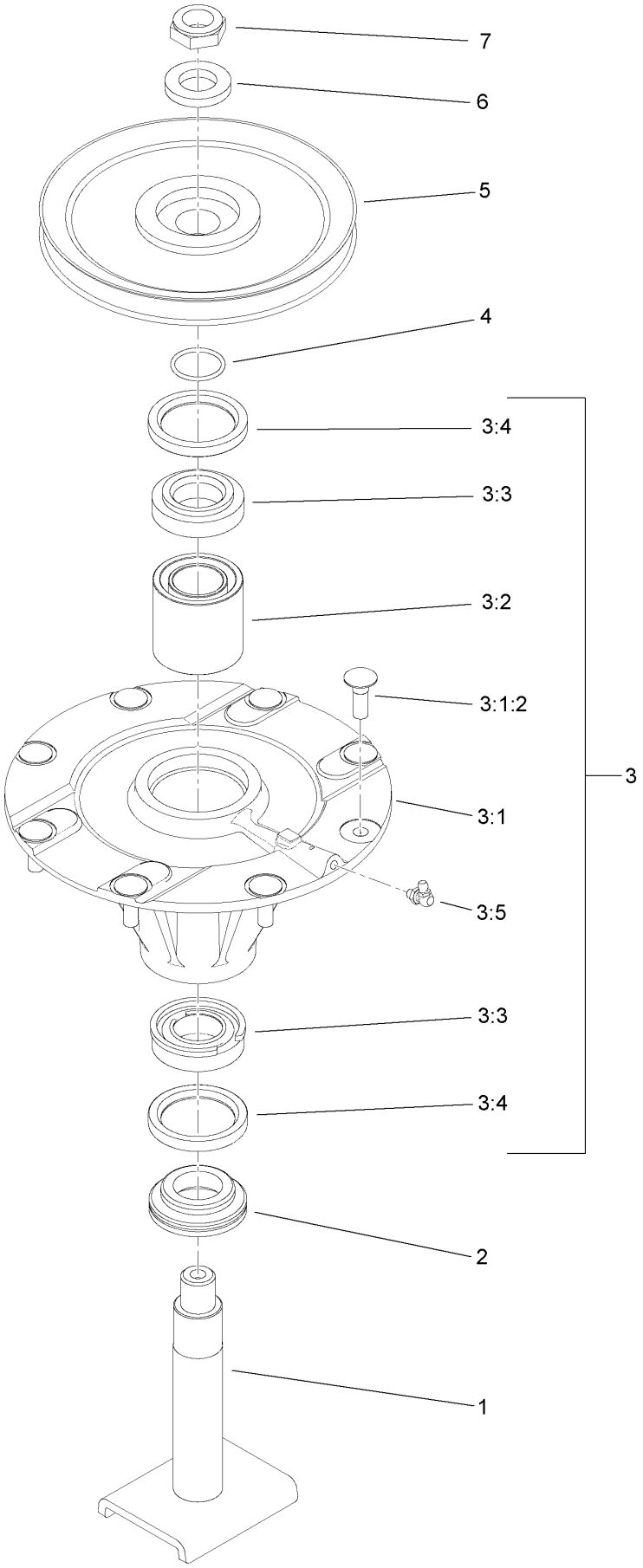

# High Driven Spindle Assembly No. 139-1032 (continued)

| Ref. | Part Number | Qty. | Description |
|---|---|---|---|
| 1 | 139-1042 | 1 | Spindle-Shaft |
| 2 | 138-6416 | 1 | Spacer-Spindle, Shaft |
| 3 | 119-4777 | 1 | Spindle ASM |
| 3:1 | | 1 | Spindle ASM ● |
| 3:1:2 | 114-8195 | 8 | Bolt-Neck, Ribbed |
| 3:2 | 108-1954 | 1 | Bearing Spacer Set |
| 3:3 | 110-8297 | 1 | Bearing ASM |
| 3:4 | 253-154 | 2 | Seal-Oil |
| 3:5 | 302-60 | 1 | Fitting-Grease |
| 4 | 106-7159 | 1 | O-Ring |
| 5 | 104-3548 | 1 | Pulley-Driven, High |
| 6 | 120-5576 | 1 | Washer-Hardened |
| 7 | 3296-60 | 1 | Nut-Lock, NI |

● Not serviced separately

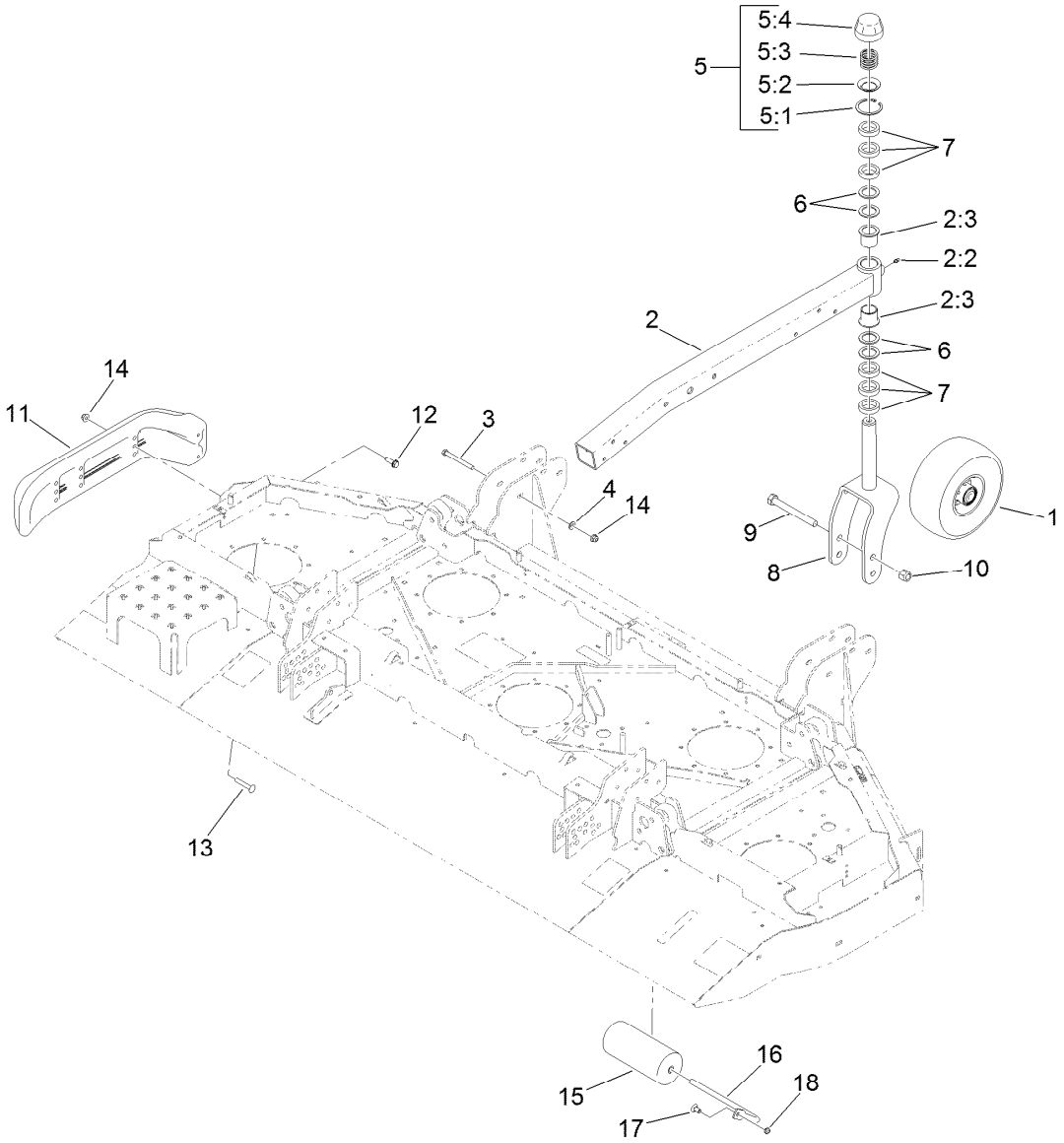


# Center Deck Roller, Skid and Caster Wheel Assembly

| Ref. | Part Number | Qty. | Description |
|---|---|---|---|
| 1 | 93-4240 | 2 | 10 Inch Wheel ASM |
| 2 | 130-7787 | 2 | Caster Arm ASM |
| 2:2 | 302-5 | 1 | Fitting-Grease |
| 2:3 | 69-6470 | 2 | Bushing-Caster |
| 3 | 323-42 | 12 | Screw-HH |
| 4 | 3256-24 | 12 | Washer-Plain |
| 5 | 92-9727 | 2 | HOC Cap ASM |
| 5:1 | 92-5581 | 1 | Ring-Rtng,Snap,Int,Flat |
| 5:2 | 92-5583 | 1 | Washer-Cap |
| 5:3 | 92-9726 | 1 | Spring-Compression |
| 5:4 | 92-8861 | 1 | Cap-HOC |
| 6 | 69-6860 | 8 | Washer-Thrust |

| Ref. | Part Number | Qty. | Description |
|---|---|---|---|
| 7 | 69-1510 | 12 | Spacer |
| 8 | 130-7784-01 | 2 | Fork-Caster |
| 9 | 327-24 | 2 | Screw-HH |
| 10 | 3296-53 | 2 | Nut-Lock, NI |
| 11 | 112-1479 | 2 | Skid-Bumper, Deck |
| 12 | 9136144 | 2 | Screw-HWHTF |
| 13 | 3231-33 | 4 | Screw-CARR |
| 14 | 104-8301 | 16 | Nut-HF, NI |
| 15 | 68-6710 | 1 | Roller |
| 16 | 68-6840 | 1 | Shaft-Roller |
| 17 | 3231-21 | 1 | Screw-CARR |
| 18 | 3296-59 | 1 | Nut-Lock, NI |

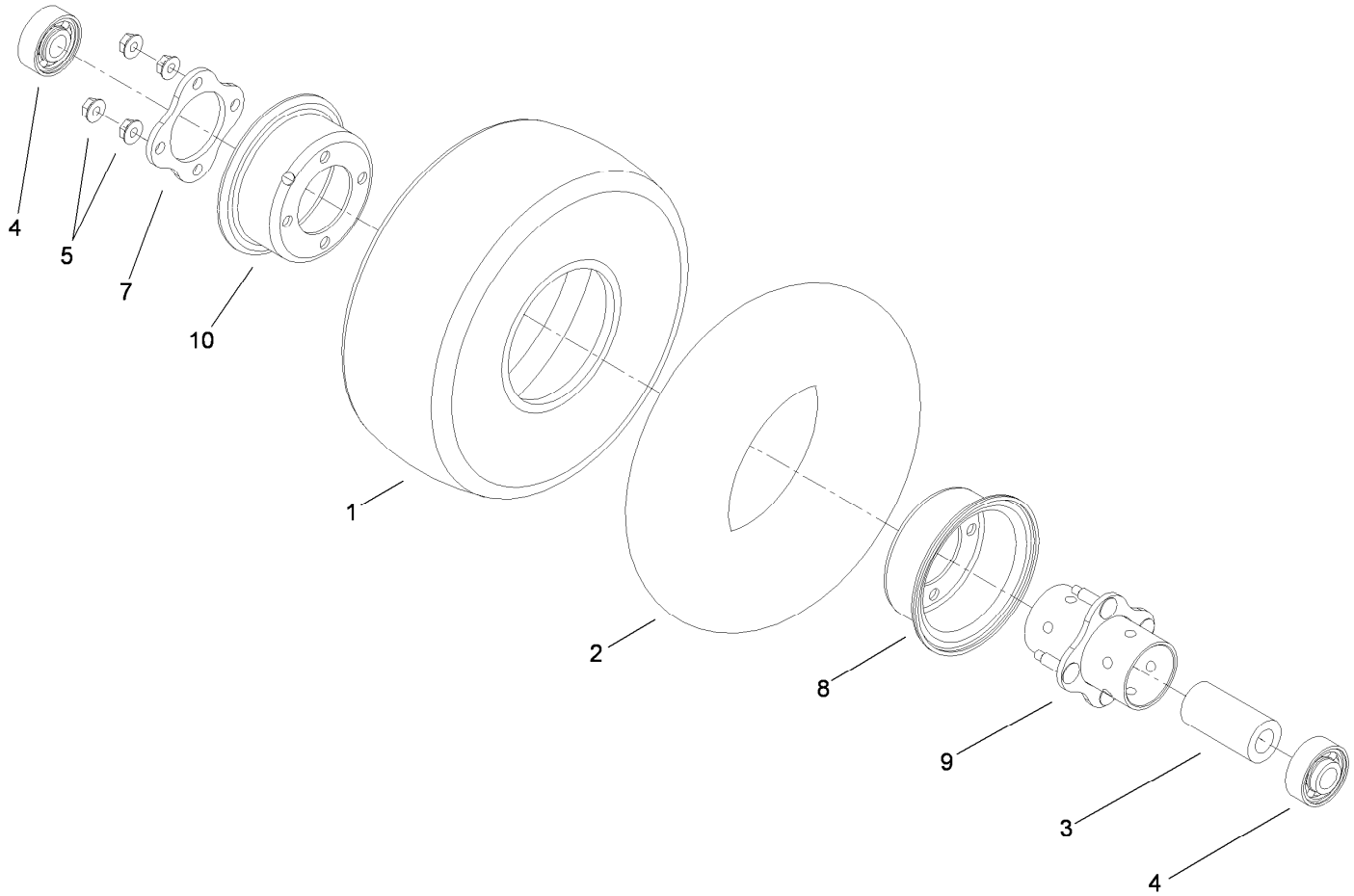


# 10 Inch Wheel Assembly No. 93-4240

| *Ref.* | *Part Number* | *Qty.* | *Description* |
|---|---|---|---|
| 1 | 93-4243 | 1 | Tire |
| 2 | 93-4244 | 1 | Tube-Inner (W/Valve) |
| 3 | 93-4241 | 1 | Spacer-Bearing, Inner |
| 4 | 120-3366 | 2 | Bearing |
| 5 | 32128-16 | 4 | Nut-HHF |
| 7 | 93-4242 | 1 | Plate |
| 8 | 93-4239 | 1 | Rim-Wheel, Half |
| 9 | 93-5980 | 1 | Hub |
| 10 | 95-2741 | 1 | Rim-Wheel, Half |

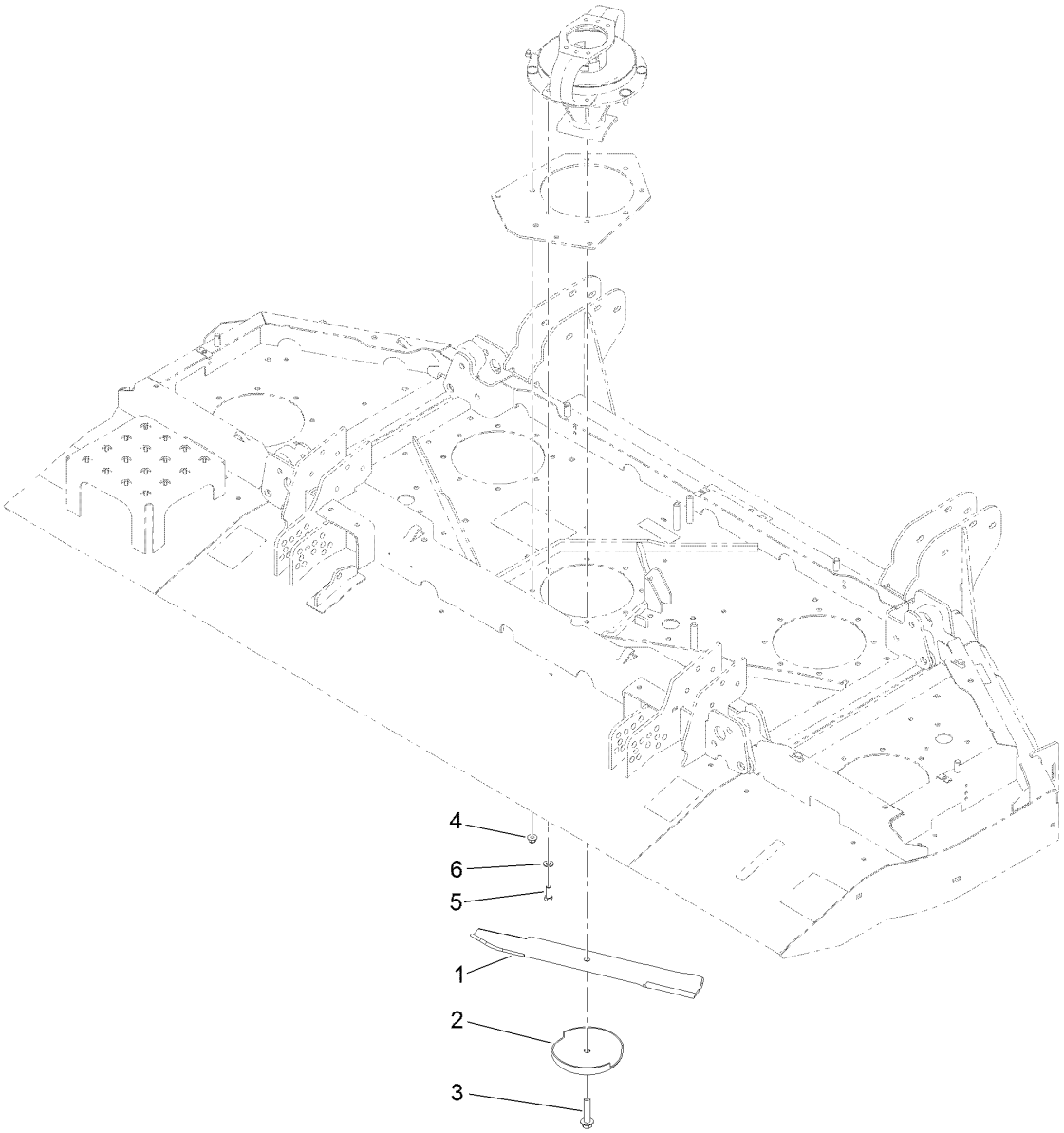


# Center Front Deck Blade Assembly

| Ref. | Part Number | Qty. | Description |
|---|---|---|---|
| 1 | 130-9151 | 5 | Blade-20 In |
| 2 | 72-9361 | 5 | Cup-Scalp, Anti |
| 3 | 92-5816 | 5 | Bolt-Blade |
| 4 | 104-8301 | 36 | Nut-HF, NI |
| 5 | 323-6 | 4 | Screw-HH |
| 6 | 3256-24 | 4 | Washer-Plain |

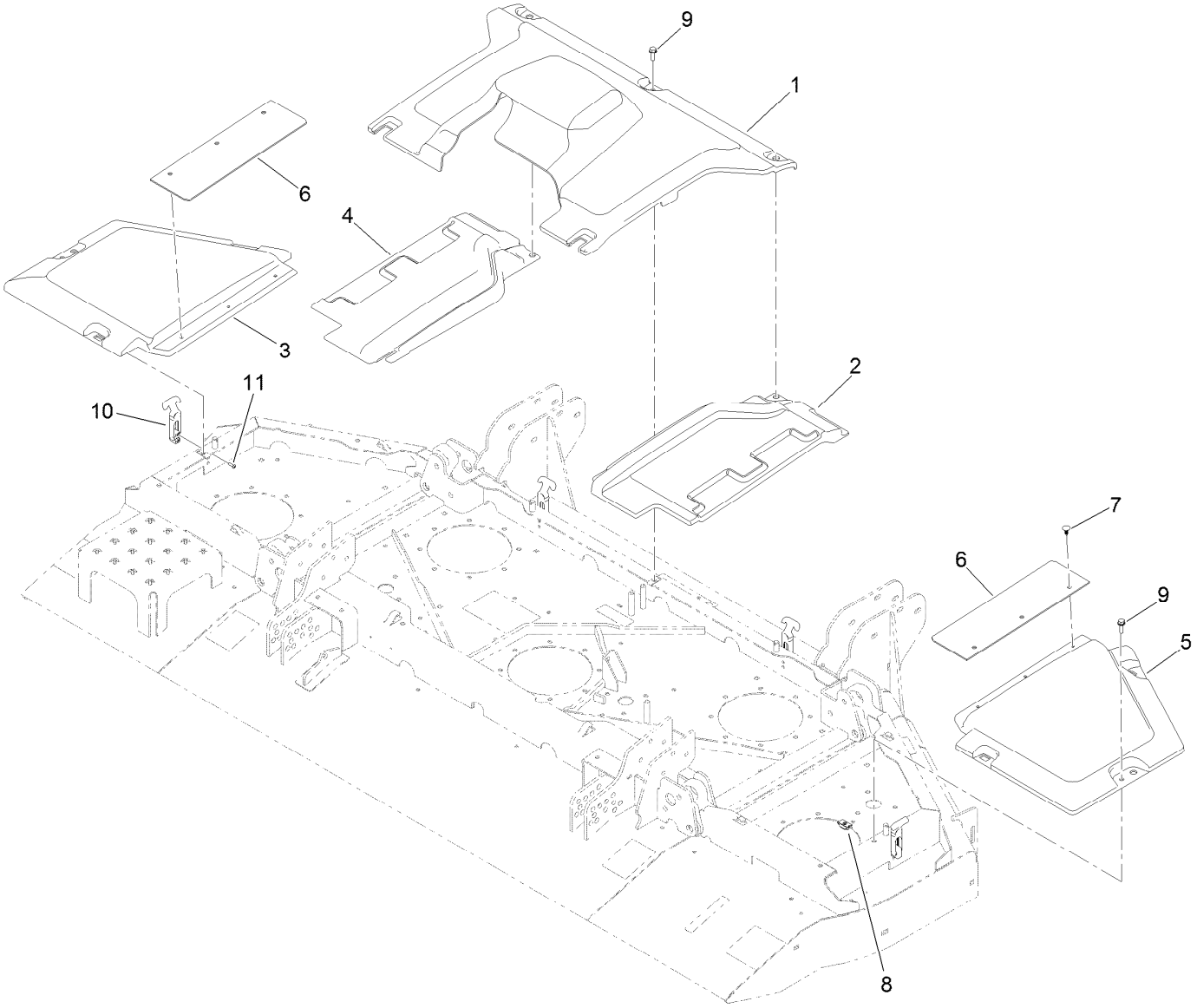


# Center Front Deck Belt Cover Assembly

| Ref. | Part Number | Qty. | Description |
|---|---|---|---|
| 1 | 131-2223 | 1 | Cover-Front Deck, Center |
| 2 | 114-5632 | 1 | Cover-Front Deck, RH Transition |
| 3 | 114-5629 | 1 | Cover-Front Deck, LH |
| 4 | 114-5631 | 1 | Cover-Front Deck, LH Transition |
| 5 | 114-5628 | 1 | Cover-Front Deck, RH |
| 6 | 115-5424 | 2 | Shield-Deck, Flexible |
| 7 | 117-2382 | 6 | Plug-Plastic |
| 8 | 110-3510 | 3 | Nut-Retainer |
| 9 | 3234-29 | 3 | Screw-HHF |
| 10 | 103-4080 | 4 | Latch-Rubber |
| 11 | 3274-39 | 8 | Screw-HSBH |

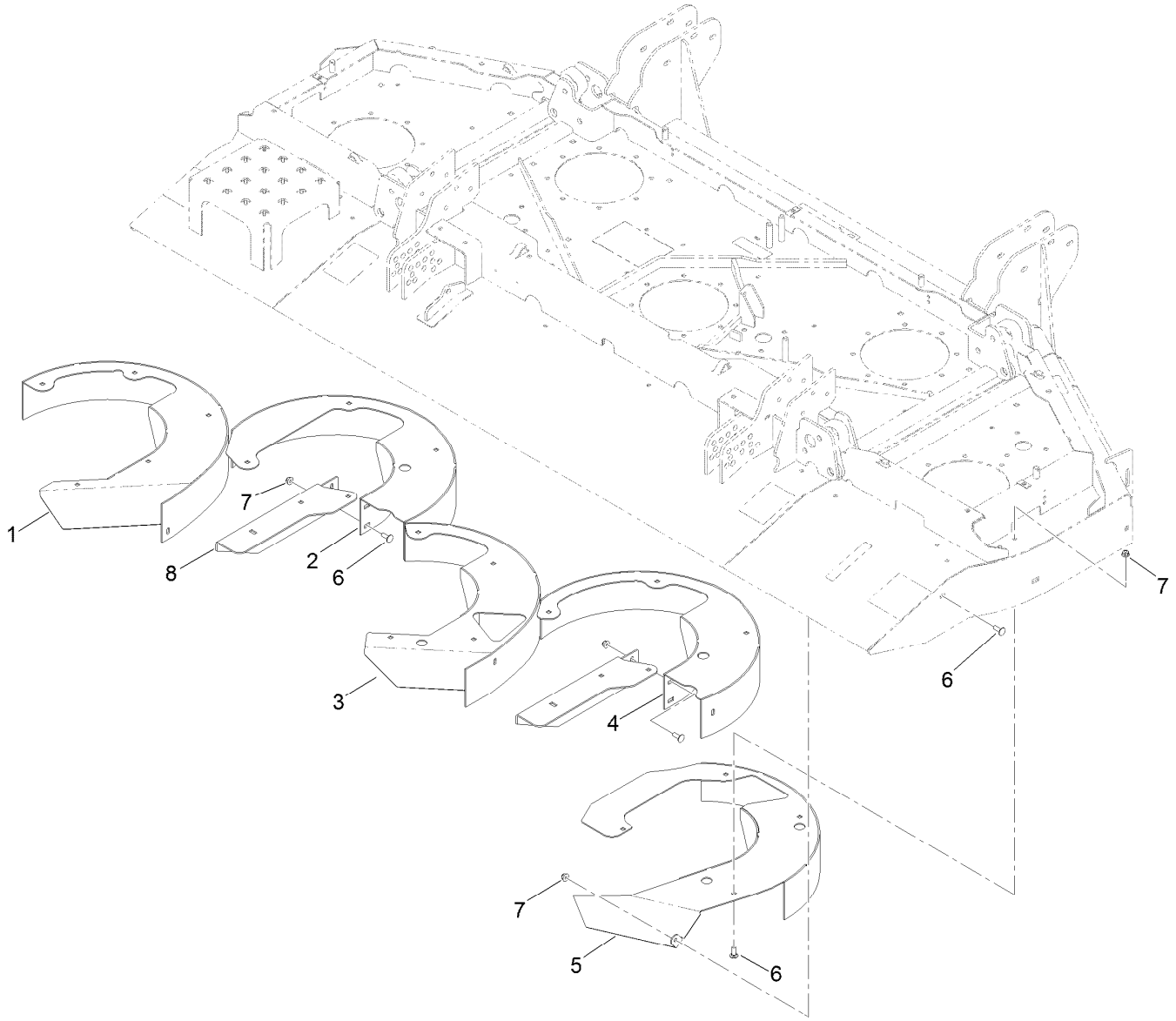


# Center Front Deck Chamber and Discharge Assembly

| *Ref.* | *Part Number* | *Qty.* | *Description* |
|---|---|---|---|
| 1 | 132-1640-0P | 1 | Chamber-Front, Left |
| 2 | 133-2244-0P | 1 | Chamber-Front, Lc |
| 3 | 132-1644-0P | 1 | Chamber-Front, Center |
| 4 | 133-2240-0P | 1 | Chamber-Front, Rc |
| 5 | 132-1647-0P | 1 | Chamber-Front, Right |
| 6 | 3230-10 | 28 | Bolt-CARR |
| 7 | 104-8300 | 28 | Nut-HF, NI |
| 8 | 133-2208-0P | 2 | Angle-Deflector |

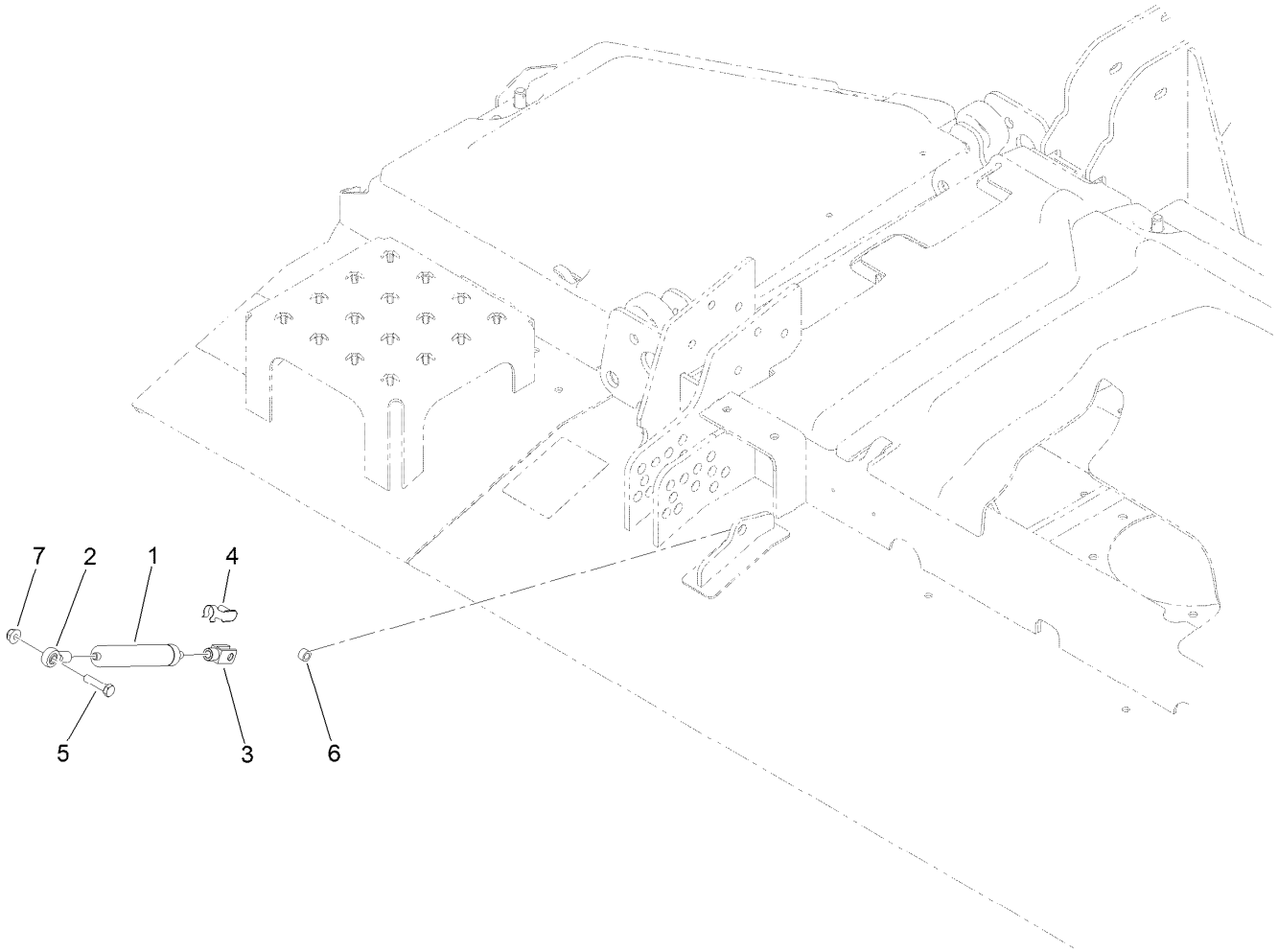


# Center Front Deck Transport Damper Assembly

| *Ref.* | *Part Number* | *Qty.* | *Description* |
|---|---|---|---|
| 1 | 105-3249 | 1 | Damper |
| 2 | 104-8331 | 1 | End-Rod, Spherical |
| 3 | 115-5455 | 1 | End-Rod, Clevis |
| 4 | 115-5454 | 1 | Pin-Spring |
| 5 | 322-17 | 1 | Screw-HH |
| 6 | 115-2142 | 1 | Spacer |
| 7 | 104-8300 | 1 | Nut-HF, NI |

# Left Hand Deck Connection Assembly

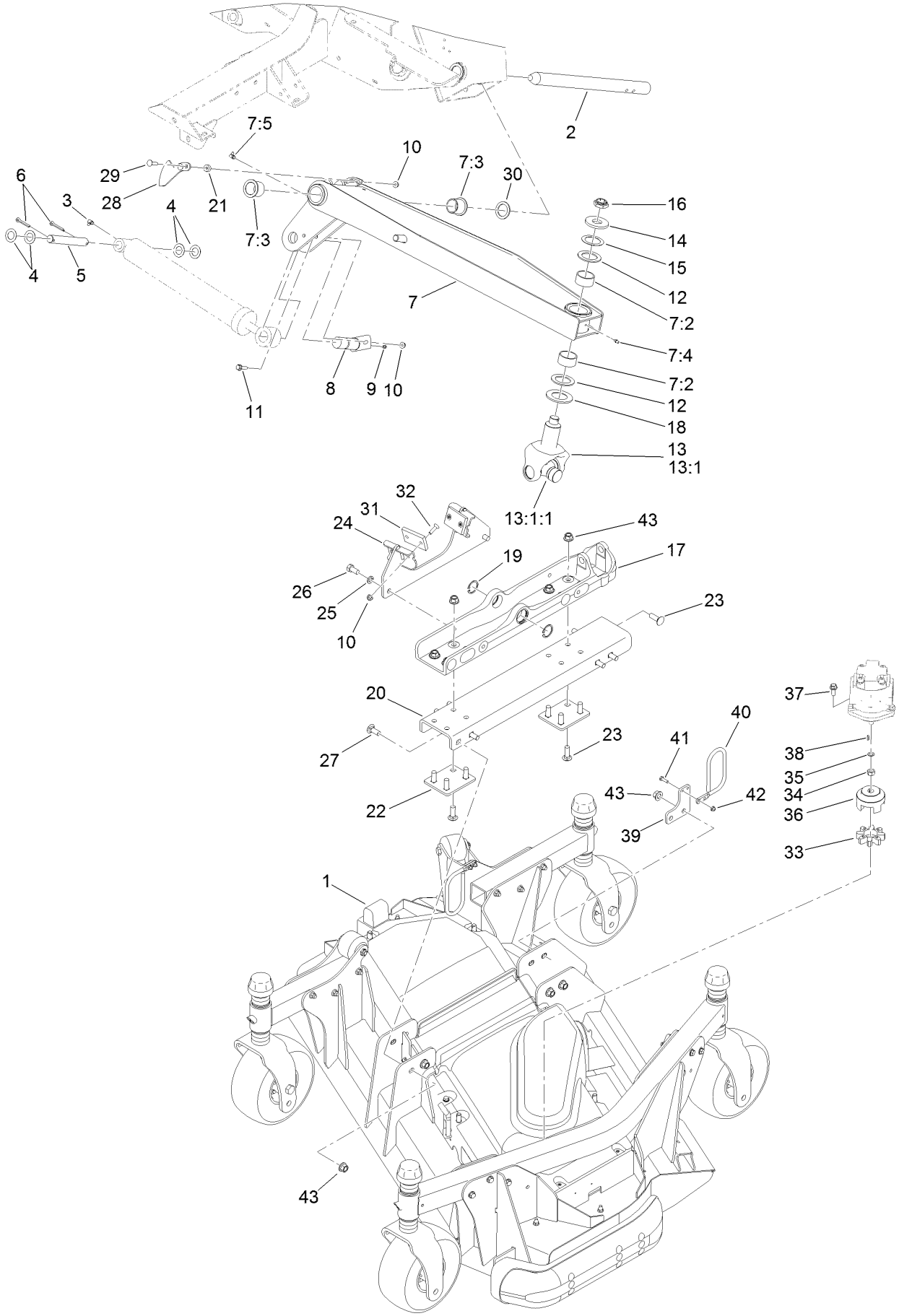

# Left Hand Deck Connection Assembly (continued)

| Ref. | Part Number | Qty. | Description |
|---|---|---|---|
| 1 | | 1 | Left Deck ASM ● |
| 2 | 121-3882 | 1 | Shaft-Pivot, Lift Arm |
| 3 | 302-60 | 1 | Fitting-Grease |
| 4 | 110-6767 | 4 | Washer-Thrust |
| 5 | 110-6006 | 1 | Pin-Clevis |
| 6 | 3272-30 | 2 | Pin-Cotter |
| 7 | 138-6396 | 1 | Lift Arm ASM, LH |
| 7:2 | 114-5596 | 2 | Bushing-Straight |
| 7:3 | 69-6470 | 2 | Bushing-Caster |
| 7:4 | 302-5 | 1 | Fitting-Grease |
| 7:5 | 302-60 | 1 | Fitting-Grease |
| 8 | 125-1912 | 1 | Pin-Pivot |
| 9 | 302-5 | 1 | Fitting-Grease |
| 10 | 104-8300 | 7 | Nut-HF, NI |
| 11 | 119-4036 | 1 | Screw-HHF |
| 12 | 104-0721 | 2 | Washer-Thrust |
| 13 | 114-5640-03 | 1 | Joint Yoke ASM |
| 13:1 | | 1 | Yoke-Joint ● |
| 13:1:1 | 104-4299 | 1 | Cross And Bearing Kit |
| 14 | 104-0719 | 1 | Washer-Hardened |
| 15 | 114-5641 | 1 | Washer-Thrust |
| 16 | 116-1399 | 1 | Locknut |
| 17 | 136-0061-03 | 1 | Mount-Deck, Machining |
| 18 | 104-0720 | 1 | Spacer |
| 19 | 32120-42 | 2 | Ring-Retaining |
| 20 | 136-0063-01 | 1 | Channel-LH |
| 21 | 121-1759 | 2 | Spacer |
| 22 | 136-0065-01 | 2 | Plate-Spacer |
| 23 | 3233-2 | 10 | Screw-CARR |
| 24 | 136-0040-03 | 1 | Stop-Deck ASM |
| 25 | 3253-7 | 2 | Washer-Lock |
| 26 | 325-4 | 2 | Screw-HH |
| 27 | 3233-1 | 6 | Screw-CARR |
| 28 | 112-7339 | 1 | Plate-Sensing |
| 29 | 3230-3 | 2 | Screw-CARR |
| 30 | 98-1452 | 1 | Washer-Thrust |
| 31 | 69-9290 | 2 | Pad-Bumper |
| 32 | 32108-103 | 4 | Screw-FH |
| 33 | 104-3542 | 1 | Spider |
| 34 | 110-8815 | 1 | Nut-Hex |
| 35 | 112-6957 | 1 | Washer-Hardened |
| 36 | 104-3541 | 1 | Hub-Spider |
| 37 | 3234-42 | 2 | Screw-HHF |
| 38 | 3257-3 | 1 | Key-Woodruff |
| 39 | 136-0055-01 | 1 | Plate-Hose Retainer |
| 40 | 130-9161 | 1 | Support-Hose |
| 41 | 321-5 | 2 | Screw-HH |
| 42 | 104-7201 | 2 | Nut-HF, NI |
| 43 | 99-5107 | 16 | Nut-Lock |

● Not serviced separately

# Left Hand Deck Belt, Pulley and Spindle Assembly

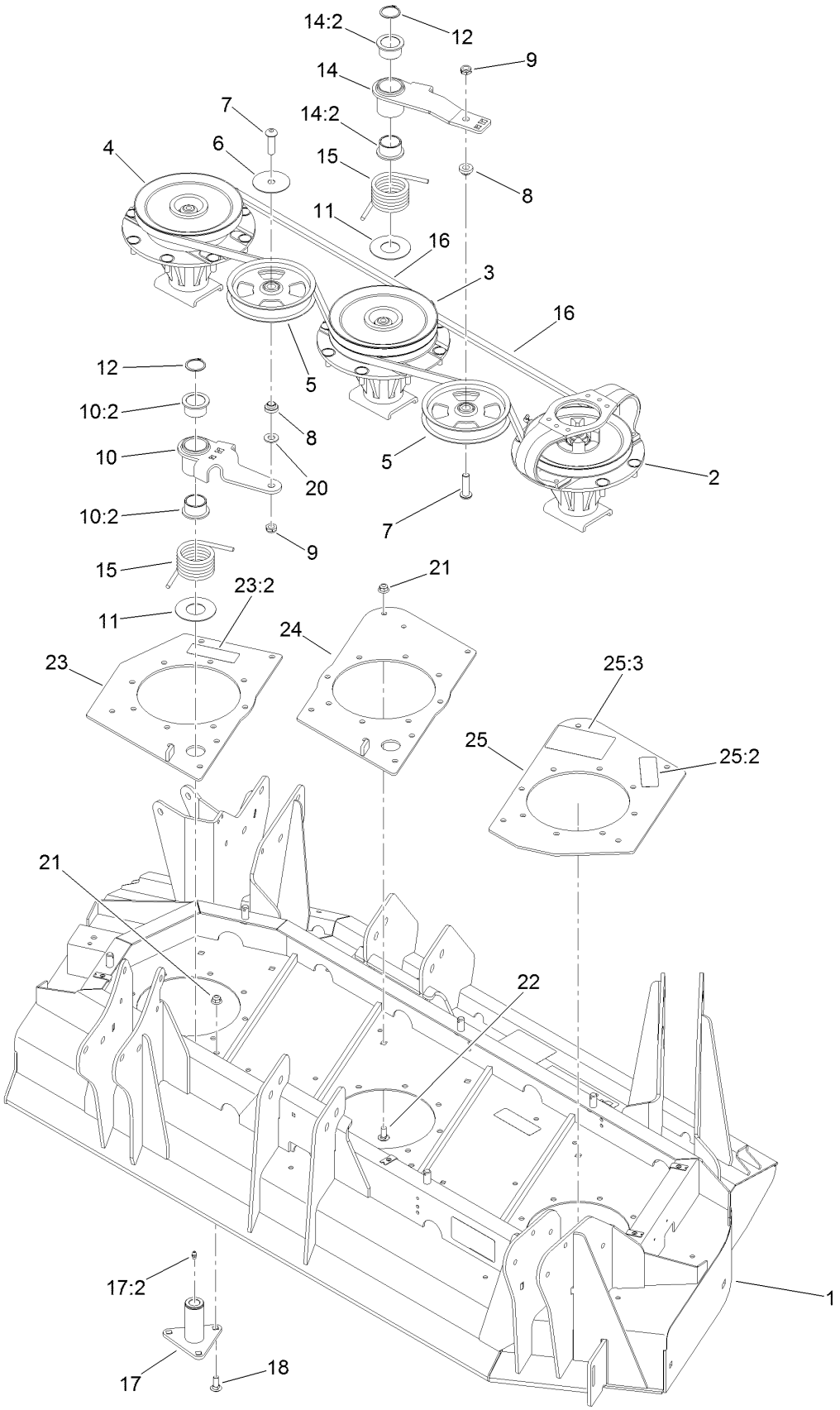

# Left Hand Deck Belt, Pulley and Spindle Assembly (continued)

| Ref. | Part Number | Qty. | Description |
|---|---|---|---|
| 1 | 130-9271 | 1 | Left Deck ASM |
| 2 | 139-1034 | 1 | Single Driving Spindle ASM |
| 3 | 139-1033 | 1 | Double Driven Spindle ASM |
| 4 | 139-1032 | 1 | High Driven Spindle ASM |
| 5 | 132-9421 | 2 | Pulley-Idler, Flat |
| 6 | 100-3102 | 1 | Washer-Flat |
| 7 | 108-1993 | 2 | Screw-HSBH |
| 8 | 108-1924 | 2 | Spacer-Idler |
| 9 | 3296-45 | 2 | Nut-Hex |
| 10 | 117-9176 | 1 | Idler Arm ASM |
| 10:2 | 93-4510 | 2 | Bushing-Caster |
| 11 | 108-1926 | 2 | Washer |
| 12 | 32120-84 | 2 | Ring-Snap, External |
| 14 | 108-1930 | 1 | Idler Arm ASM |
| 14:2 | 93-4510 | 2 | Bushing-Caster |
| 15 | 108-1921 | 2 | Spring-Torsion |
| 16 | 112-7377 | 2 | Belt-V, B |
| 17 | 137-5640 | 2 | Idler Pivot ASM |
| 17:2 | 302-5 | 1 | Fitting-Grease |
| 18 | 3231-2 | 6 | Bolt-CARR |
| 20 | 3256-26 | 1 | Washer-Flat |
| 21 | 104-8301 | 16 | Nut-HF, NI |
| 22 | 3231-27 | 10 | Screw-CARR |
| 23 | 132-1621 | 1 | Inner Spindle Plate ASM |
| 23:2 | 117-4979 | 1 | Decal-Warning |
| 24 | 132-1622-01 | 1 | Plate-Spindle, Center |
| 25 | 132-1620 | 1 | Outer Spindle Plate ASM |
| 25:2 | 117-4979 | 1 | Decal-Warning |
| 25:3 | 114-4883 | 1 | Decal-Belt Routing, Deck (LH) |

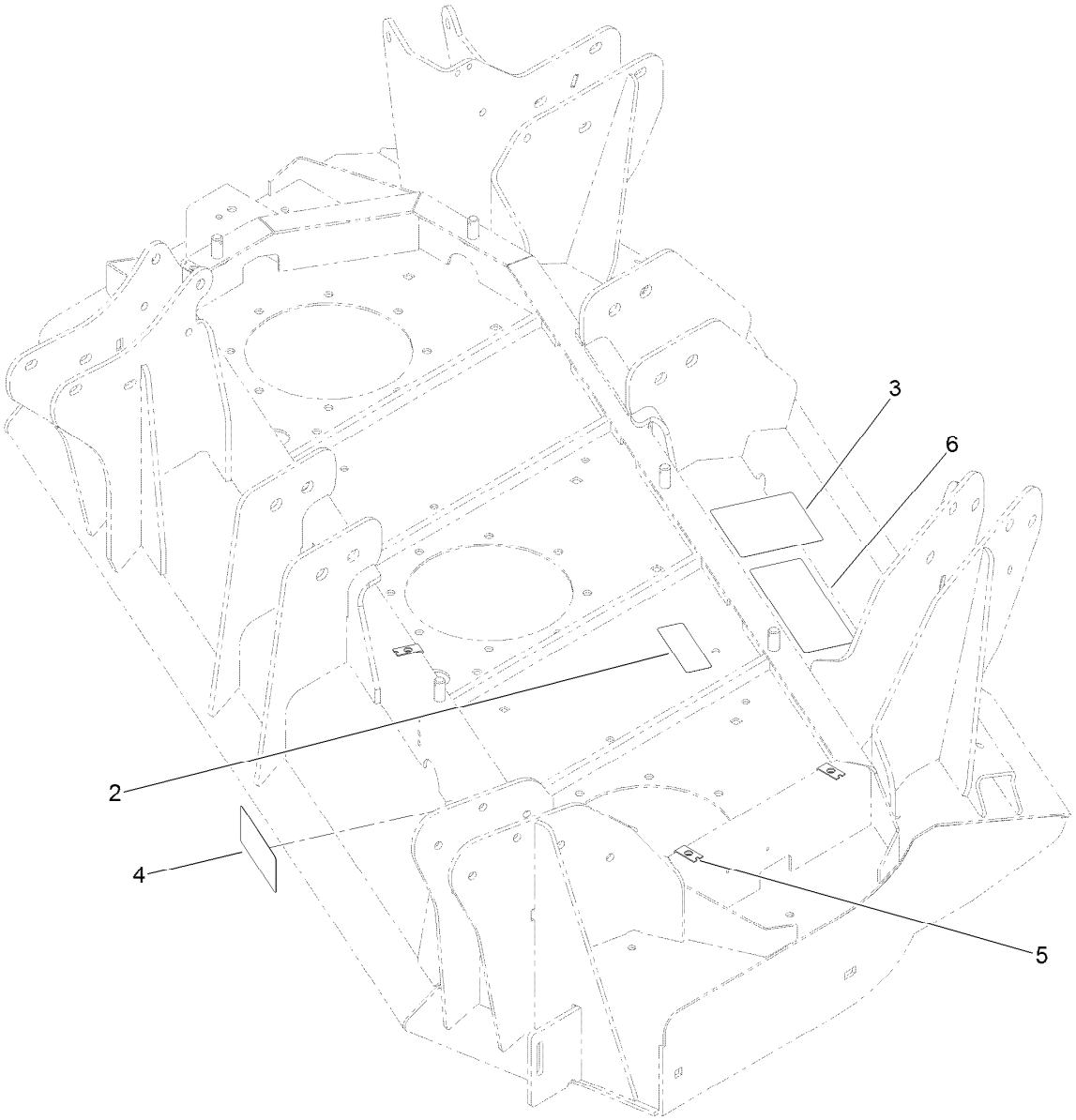


# Left Hand Deck Decal Assembly No. 130-9271

| Ref. | Part Number | Qty. | Description |
|---|---|---|---|
| 2 | 117-4979 | 1 | Decal-Warning |
| 3 | 120-6604 | 1 | Decal-Danger |
| 4 | 93-7818 | 1 | Decal-Torque, Blade Bolt |
| 5 | 110-3510 | 4 | Nut-Retainer |
| 6 | 131-6027 | 1 | Decal-HOC |

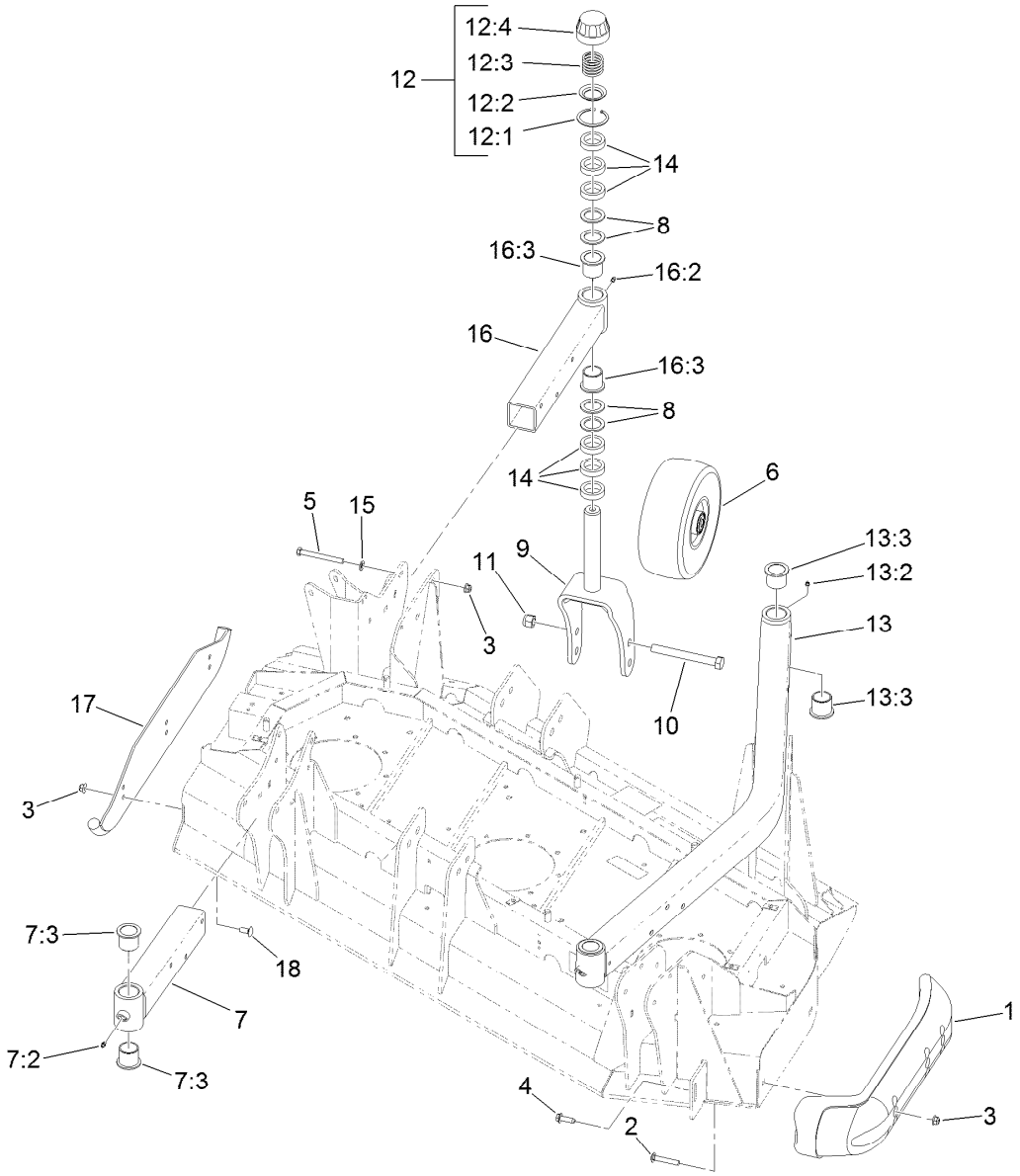


# Left Hand Deck Skid and Caster Wheel Assembly

| Ref. | Part Number | Qty. | Description |
|---|---|---|---|
| 1 | 112-1479 | 1 | Skid-Bumper, Deck |
| 2 | 3231-33 | 2 | Screw-CARR |
| 3 | 104-8301 | 17 | Nut-HF, NI |
| 4 | 9136144 | 1 | Screw-HWHTF |
| 5 | 323-42 | 12 | Screw-HH |
| 6 | 93-4240 | 4 | 10 Inch Wheel ASM |
| 7 | 131-6042 | 1 | Caster Arm ASM |
| 7:2 | 302-5 | 1 | Fitting-Grease |
| 7:3 | 69-6470 | 2 | Bushing-Caster |
| 8 | 69-6860 | 16 | Washer-Thrust |
| 9 | 130-7784-01 | 4 | Fork-Caster |
| 10 | 327-24 | 4 | Screw-HH |
| 11 | 3296-53 | 4 | Nut-Lock, NI |
| 12 | 92-9727 | 4 | HOC Cap ASM |

| Ref. | Part Number | Qty. | Description |
|---|---|---|---|
| 12:1 | 92-5581 | 1 | Ring-Rtng,Snap,Int,Flat |
| 12:2 | 92-5583 | 1 | Washer-Cap |
| 12:3 | 92-9726 | 1 | Spring-Compression |
| 12:4 | 92-8861 | 1 | Cap-HOC |
| 13 | 114-0953 | 1 | HOC Castor Arm ASM |
| 13:2 | 302-5 | 2 | Fitting-Grease |
| 13:3 | 69-6470 | 4 | Bushing-Caster |
| 14 | 69-1510 | 24 | Spacer |
| 15 | 3256-24 | 12 | Washer-Plain |
| 16 | 131-6047 | 1 | Caster Arm ASM |
| 16:2 | 302-5 | 1 | Fitting-Grease |
| 16:3 | 69-6470 | 2 | Bushing-Caster |
| 17 | 131-6034-01 | 1 | Skid-Deck |
| 18 | 3231-27 | 3 | Screw-CARR |

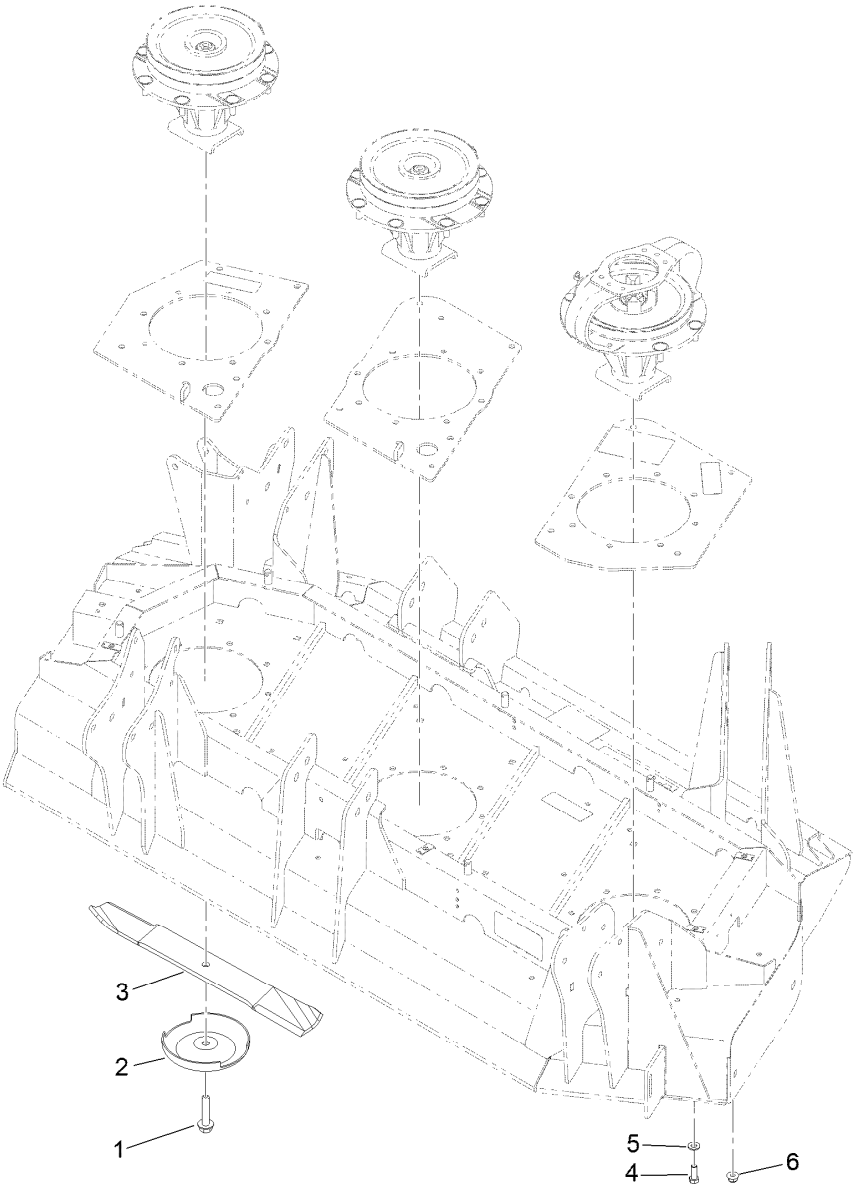


# Left Hand Deck Blade Assembly

| *Ref.* | *Part Number* | *Qty.* | *Description* |
|---|---|---|---|
| 1 | 92-5816 | 3 | Bolt-Blade |
| 2 | 72-9361 | 3 | Cup-Scalp, Anti |
| 3 | 130-9151 | 3 | Blade-20 In |
| 4 | 323-6 | 4 | Screw-HH |
| 5 | 3256-24 | 4 | Washer-Plain |
| 6 | 104-8301 | 20 | Nut-HF, NI |

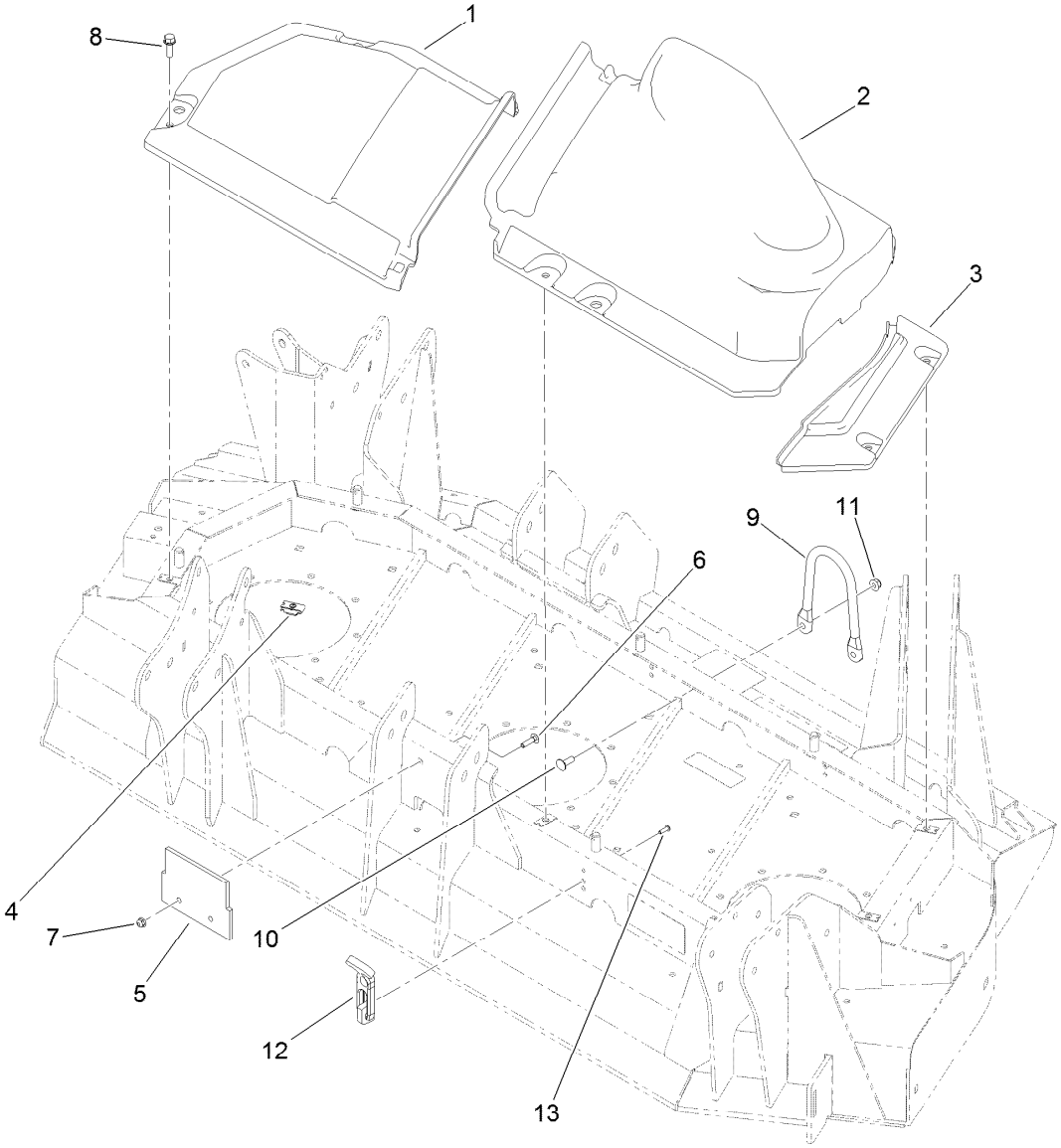


# Left Hand Deck Belt Cover Assembly

| Ref. | Part Number | Qty. | Description |
|---|---|---|---|
| 1 | 114-5633 | 1 | Cover-Deck, LH Wing (Inside) |
| 2 | 114-5634 | 1 | Cover-Deck, LH Wing (Outside) |
| 3 | 114-5637 | 1 | Cover-Deck, LH Wing (Fixed) |
| 4 | 110-3510 | 4 | Nut-Retainer |
| 5 | 136-0079 | 1 | Plug-Rubber |
| 6 | 3229-2 | 2 | Screw-CARR |
| 7 | 104-7201 | 2 | Nut-HF, NI |
| 8 | 3234-29 | 4 | Screw-HHF |
| 9 | 115-3362 | 1 | Guide-Hose |
| 10 | 3230-10 | 2 | Bolt-CARR |
| 11 | 104-8300 | 2 | Nut-HF, NI |
| 12 | 103-4080 | 4 | Latch-Rubber |
| 13 | 3274-39 | 8 | Screw-HSBH |

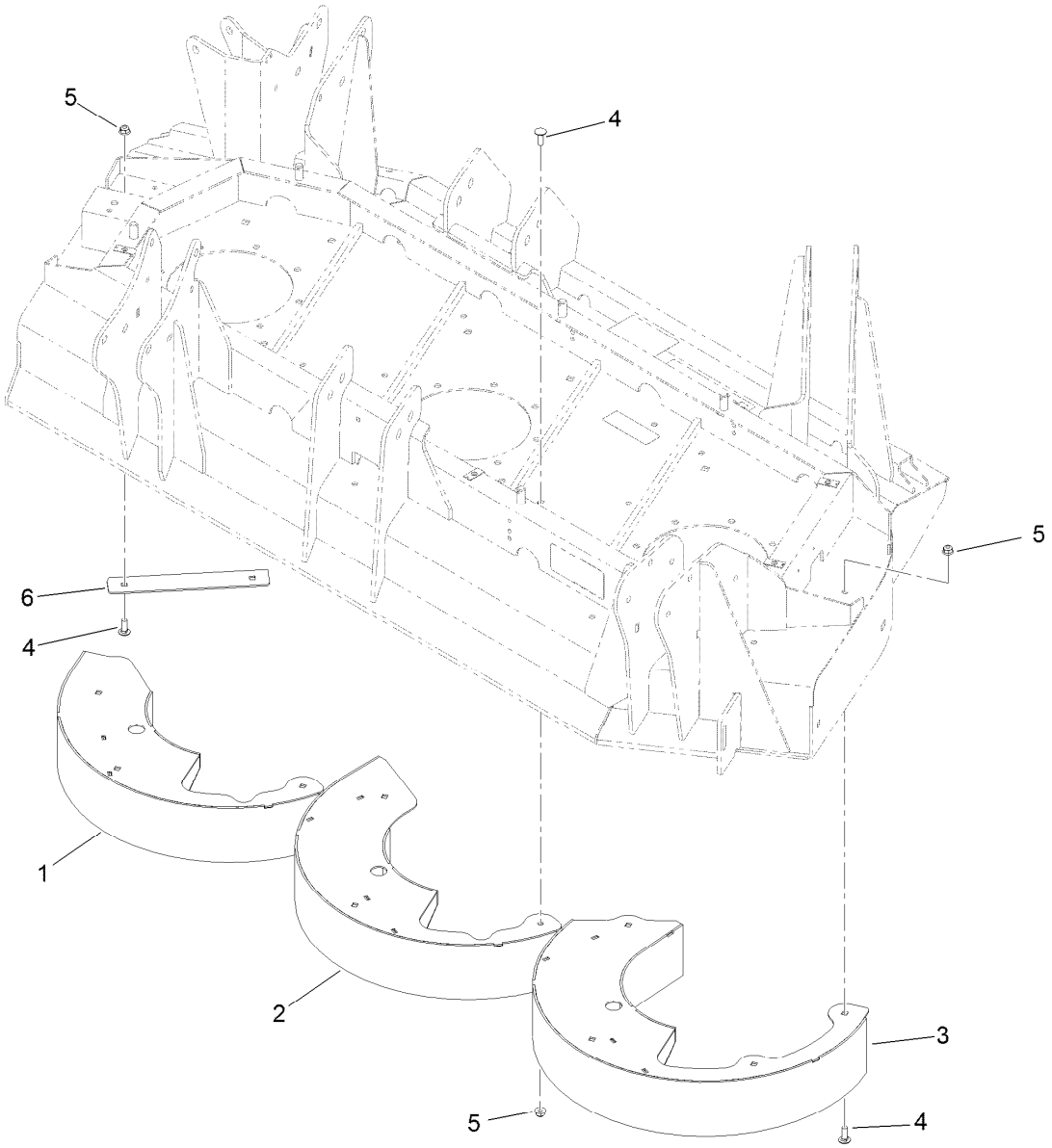


# Left Hand Deck Chamber Assembly

| *Ref.* | *Part Number* | *Qty.* | *Description* |
|---|---|---|---|
| 1 | 132-1600-0P | 1 | Chamber-Left, Inner |
| 2 | 131-6005-0P | 1 | Chamber-Left, Center |
| 3 | 131-6001-0P | 1 | Chamber-Left, Outer |
| 4 | 3230-10 | 12 | Bolt-CARR |
| 5 | 104-8300 | 12 | Nut-HF, NI |
| 6 | 133-2248-0P | 1 | Deflector-LH |

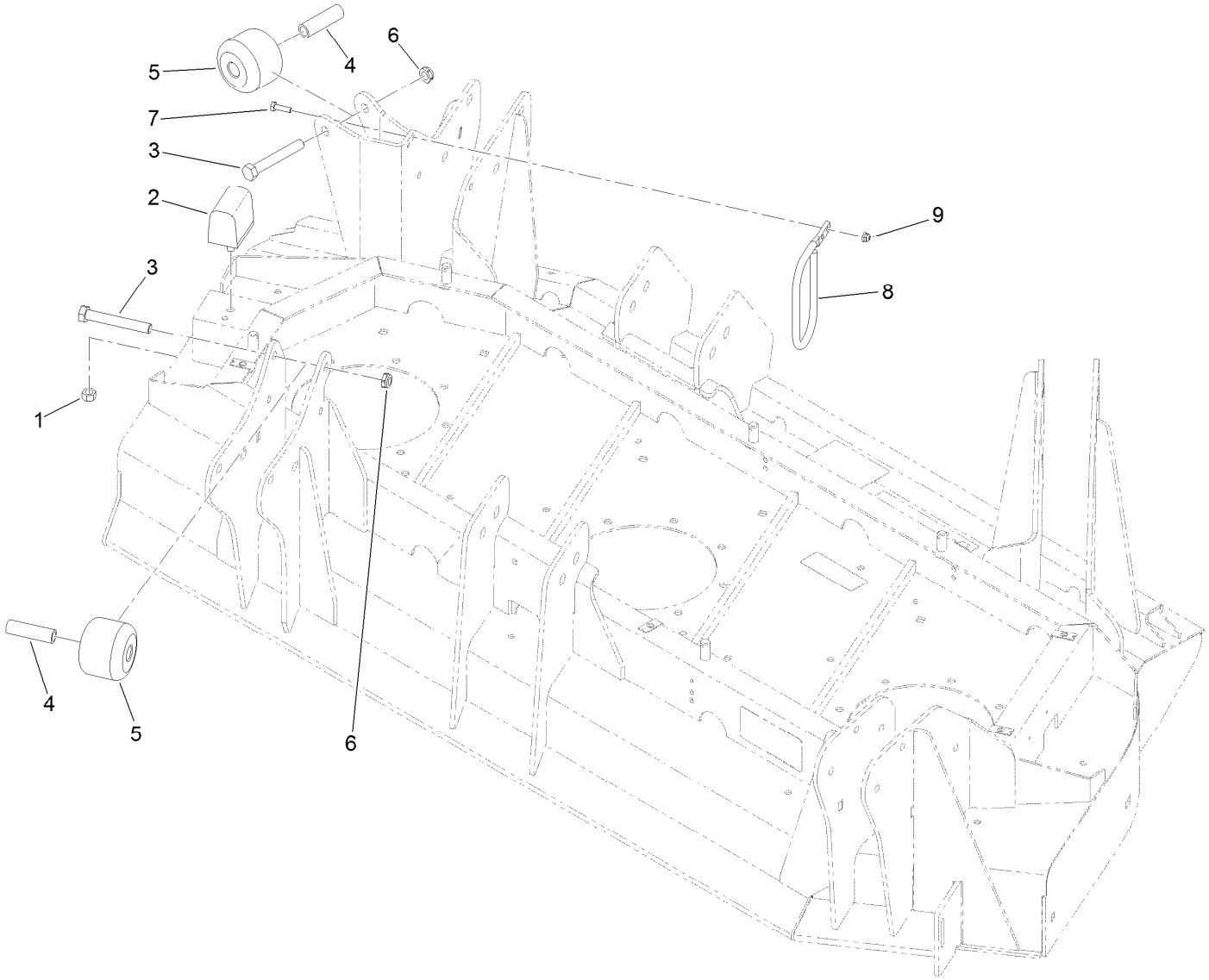


# Left Hand Deck Stop Assembly

| *Ref.* | *Part Number* | *Qty.* | *Description* |
|---|---|---|---|
| 1 | 33025-00 | 1 | Nut-Lock, NI |
| 2 | 87-3470 | 1 | Bumper |
| 3 | 325-14 | 2 | Screw-HH |
| 4 | 115-2144 | 2 | Tube-Spacer |
| 5 | 115-3366 | 2 | Roller |
| 6 | 3296-45 | 2 | Nut-Hex |
| 7 | 321-5 | 2 | Screw-HH |
| 8 | 130-9161 | 1 | Support-Hose |
| 9 | 104-7201 | 2 | Nut-HF, NI |

# Left Hand Deck Impact Arm and Limit Switch Assembly

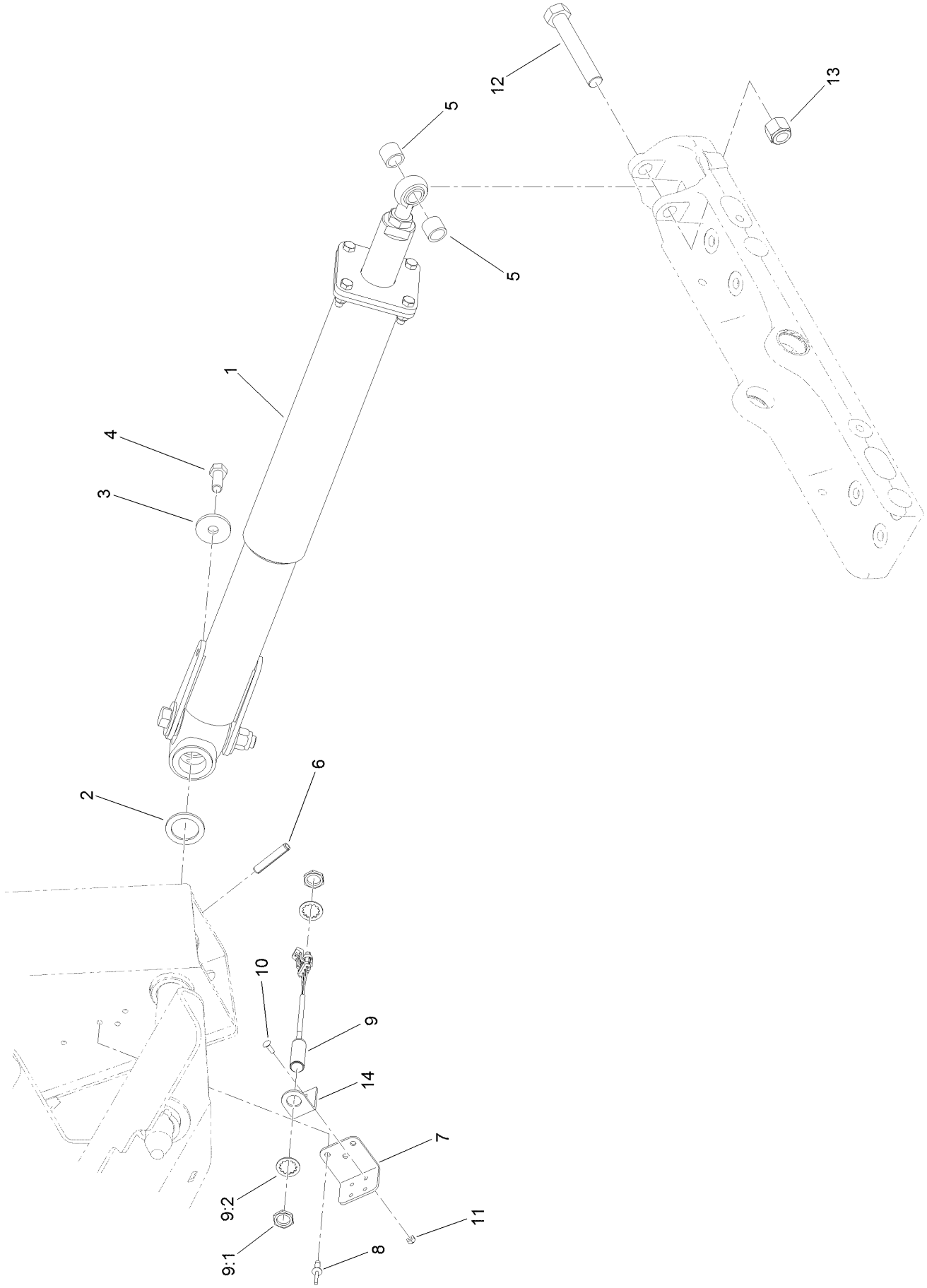

# Left Hand Deck Impact Arm and Limit Switch Assembly (continued)

| Ref. | Part Number | Qty. | Description |
|---|---|---|---|
| 1 | 137-1648 | 1 | Impact Damper ASM |
| 2 | 98-1452 | 1 | Washer-Thrust |
| 3 | 106-2008 | 1 | Washer-Thrust |
| 4 | 325-5 | 1 | Screw-HH |
| 5 | 136-0077 | 2 | Spacer |
| 6 | 117-5479 | 2 | Pin-Spring |
| 7 | 133-2236 | 1 | Bracket-Support |
| 8 | 3290-412 | 3 | Rivet-Blind |
| 9 | 115-5300 | 1 | Proximity Switch ASM |
| 9:1 | 117-3207 | 2 | Nut-Hex |
| 9:2 | 117-3208 | 2 | Washer-Lock, Internal Tooth |
| 10 | 3229-34 | 2 | Screw-CARR |
| 11 | 3296-2 | 2 | Nut-Lock, NI |
| 12 | 328-8 | 1 | Screw-HH |
| 13 | 3296-51 | 1 | Nut-Lock, NI |
| 14 | 133-2235 | 1 | Bracket-Sensor, Side |

# Impact Damper Assembly No. 137-1648

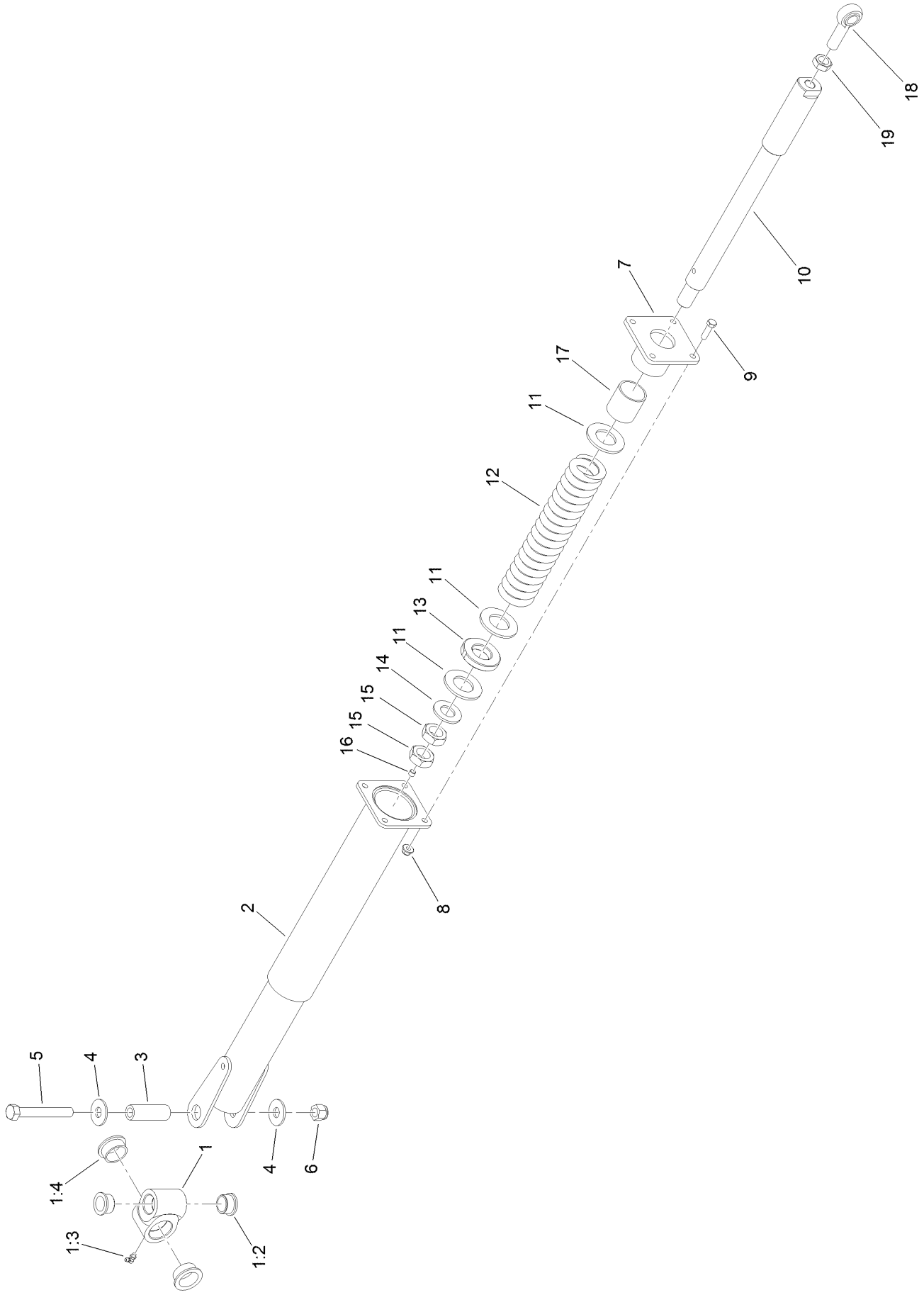

# Impact Damper Assembly No. 137-1648 (continued)

| Ref. | Part Number | Qty. | Description |
|---|---|---|---|
| 1 | 138-5253 | 1 | Pivot Hub ASM |
| 1:2 | 302-60 | 1 | Fitting-Grease |
| 1:3 | 115-5469 | 2 | Bushing-Flange |
| 1:4 | 114-5680 | 2 | Bushing-Flange |
| 2 | 137-5596 | 1 | Arm-Impact, Rear |
| 3 | 94-6604 | 1 | Tube-Spacer |
| 4 | 3256-7 | 2 | Washer-Flat |
| 5 | 327-23 | 1 | Screw-HH |
| 6 | 3296-53 | 1 | Nut-Lock, NI |
| 7 | 138-5250 | 1 | Housing ASM |
| 8 | 104-8301 | 4 | Nut-HF, NI |
| 9 | 323-7 | 4 | Screw-HH |
| 10 | 138-5266 | 1 | Shaft-Spring |
| 11 | 114-5986 | 3 | Washer-Plain |
| 12 | 114-5993 | 1 | Spring-Compression |
| 13 | 114-5992 | 1 | Bearing-Plastic |
| 14 | 3256-62 | 1 | Washer-Flat |
| 15 | 3220-9 | 2 | Nut-Jam |
| 16 | 285-17 | 1 | Plug-Pipe |
| 17 | 114-5989 | 1 | Bushing-Plain |
| 18 | 105-2806 | 1 | End-Rod |
| 19 | 3220-7 | 1 | Nut-Jam |

# Left Hand Deck Transport Lock Assembly

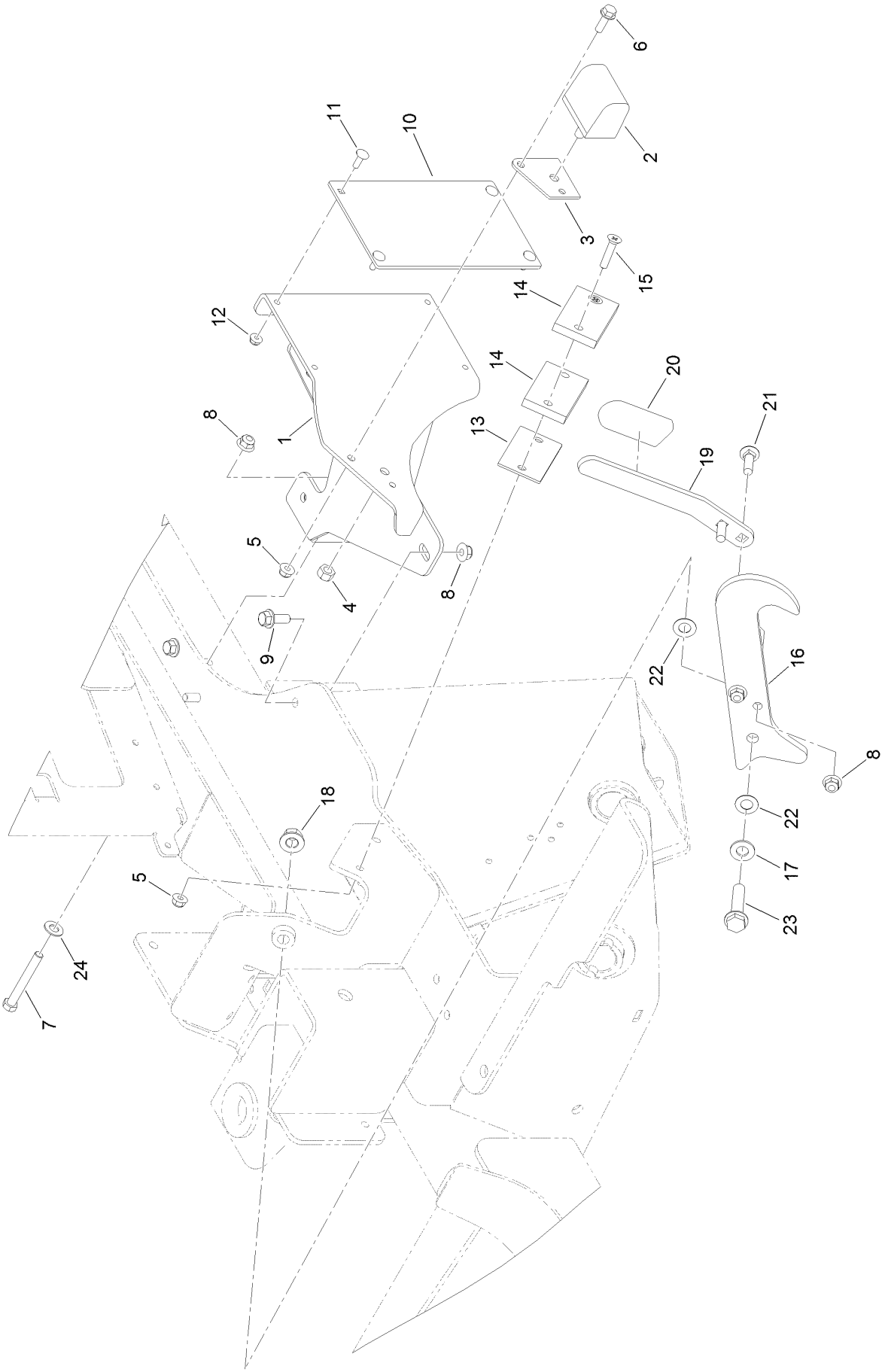

# Left Hand Deck Transport Lock Assembly (continued)

| Ref. | Part Number | Qty. | Description |
|---|---|---|---|
| 1 | 119-8275-01 | 1 | Pad-Transport, LH |
| 2 | 87-3470 | 1 | Bumper |
| 3 | 115-8826 | 1 | Shim-Bumper |
| 4 | 33025-00 | 1 | Nut-Lock, NI |
| 5 | 104-8300 | 3 | Nut-HF, NI |
| 6 | 3234-17 | 1 | Screw-HHF |
| 7 | 323-14 | 1 | Screw-HH |
| 8 | 104-8301 | 5 | Nut-HF, NI |
| 9 | 3234-42 | 2 | Screw-HHF |
| 10 | 117-5476 | 1 | Pad-Roller |
| 11 | 1-807512 | 4 | Bolt-CARR |
| 12 | 104-7201 | 4 | Nut-HF, NI |
| 13 | 114-5675 | 1 | Shim-Pad |
| 14 | 69-9300 | 2 | Pad-Bumper |
| 15 | 32108-107 | 2 | Screw-FH |
| 16 | 119-7723-03 | 1 | Latch-Wing |
| 17 | 3256-26 | 1 | Washer-Flat |
| 18 | 99-5107 | 1 | Nut-Lock |
| 19 | 114-5659-03 | 1 | Handle-Latch |
| 20 | 119-1846 | 1 | Grip |
| 21 | 3231-25 | 2 | Bolt-CARR |
| 22 | 104-3577 | 2 | Washer |
| 23 | 3234-46 | 1 | Screw-HHF |
| 24 | 52-2861 | 1 | Washer |

# Right Hand Deck Connection Assembly

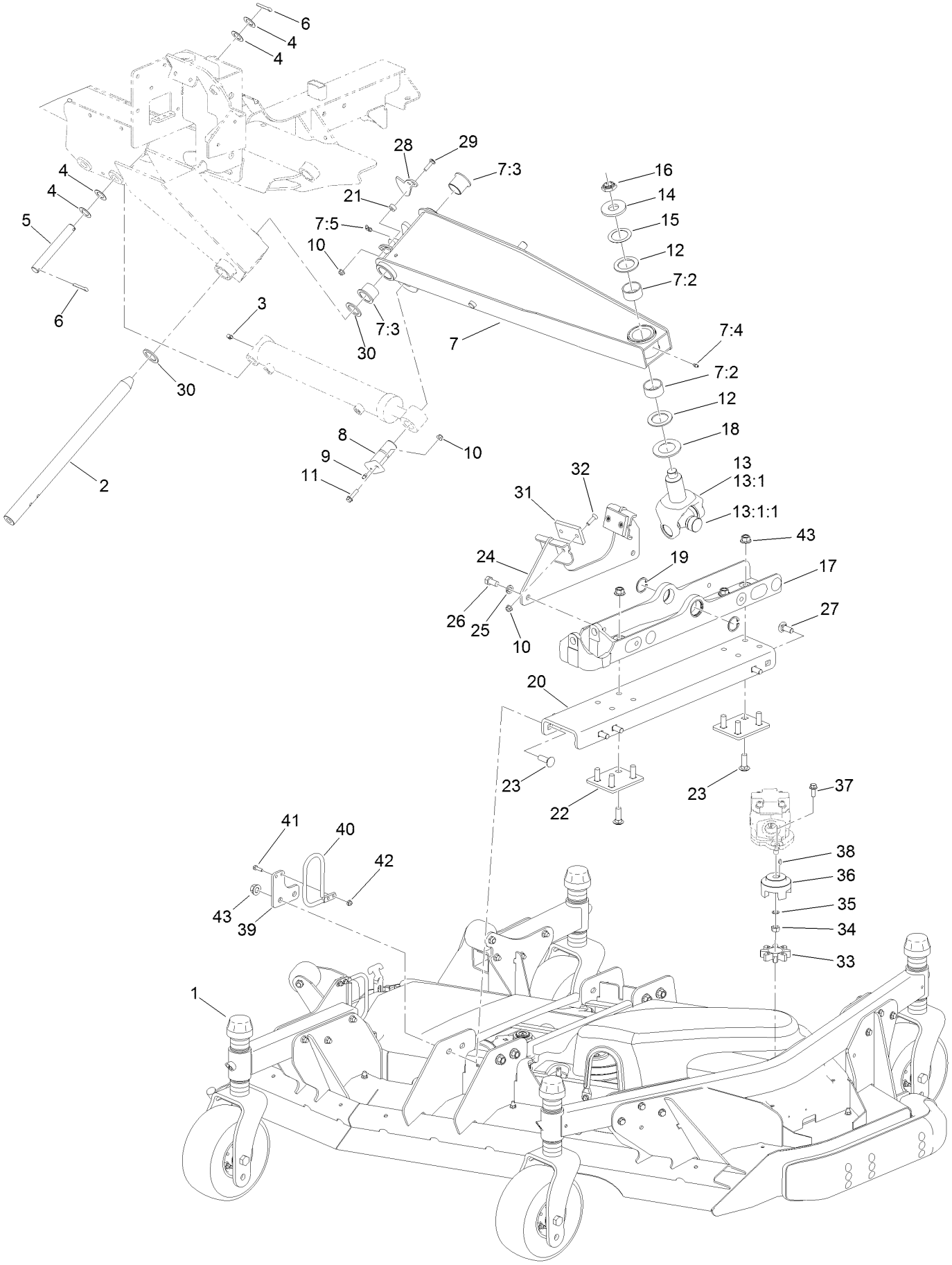

# Right Hand Deck Connection Assembly (continued)

| Ref. | Part Number | Qty. | Description |
|---|---|---|---|
| 1 | | 1 | Right Deck ASM ● |
| 2 | 121-3882 | 1 | Shaft-Pivot, Lift Arm |
| 3 | 302-60 | 1 | Fitting-Grease |
| 4 | 110-6767 | 4 | Washer-Thrust |
| 5 | 110-6006 | 1 | Pin-Clevis |
| 6 | 3272-30 | 2 | Pin-Cotter |
| 7 | 138-6395 | 1 | Lift Arm ASM, RH |
| 7:2 | 114-5596 | 2 | Bushing-Straight |
| 7:3 | 69-6470 | 2 | Bushing-Caster |
| 7:4 | 302-5 | 1 | Fitting-Grease |
| 7:5 | 302-60 | 1 | Fitting-Grease |
| 8 | 125-1912 | 1 | Pin-Pivot |
| 9 | 302-5 | 1 | Fitting-Grease |
| 10 | 104-8300 | 7 | Nut-HF, NI |
| 11 | 119-4036 | 1 | Screw-HHF |
| 12 | 104-0721 | 2 | Washer-Thrust |
| 13 | 114-5640-03 | 1 | Joint Yoke ASM |
| 13:1 | | 1 | Yoke-Joint ● |
| 13:1:1 | 104-4299 | 1 | Cross And Bearing Kit |
| 14 | 104-0719 | 1 | Washer-Hardened |
| 15 | 114-5641 | 1 | Washer-Thrust |
| 16 | 116-1399 | 1 | Locknut |
| 17 | 136-0061-03 | 1 | Mount-Deck, Machining |
| 18 | 104-0720 | 1 | Spacer |
| 19 | 32120-42 | 2 | Ring-Retaining |
| 20 | 136-0064-01 | 1 | Channel-RH |
| 21 | 121-1759 | 2 | Spacer |
| 22 | 136-0065-01 | 2 | Plate-Spacer |
| 23 | 3233-2 | 10 | Screw-CARR |
| 24 | 136-0080-03 | 1 | Stop-Deck, RH |
| 25 | 3253-7 | 2 | Washer-Lock |
| 26 | 325-4 | 2 | Screw-HH |
| 27 | 3233-1 | 6 | Screw-CARR |
| 28 | 112-7339 | 1 | Plate-Sensing |
| 29 | 3230-3 | 2 | Screw-CARR |
| 30 | 98-1452 | 1 | Washer-Thrust |
| 31 | 69-9290 | 2 | Pad-Bumper |
| 32 | 32108-103 | 4 | Screw-FH |
| 33 | 104-3542 | 1 | Spider |
| 34 | 110-8815 | 1 | Nut-Hex |
| 35 | 112-6957 | 1 | Washer-Hardened |
| 36 | 104-3541 | 1 | Hub-Spider |
| 37 | 3234-42 | 2 | Screw-HHF |
| 38 | 3257-3 | 1 | Key-Woodruff |
| 39 | 136-0055-01 | 1 | Plate-Hose Retainer |
| 40 | 130-9161 | 1 | Support-Hose |
| 41 | 321-5 | 2 | Screw-HH |
| 42 | 104-7201 | 2 | Nut-HF, NI |
| 43 | 99-5107 | 16 | Nut-Lock |

● Not serviced separately

# Right Hand Deck Belt, Pulley and Spindle Assembly

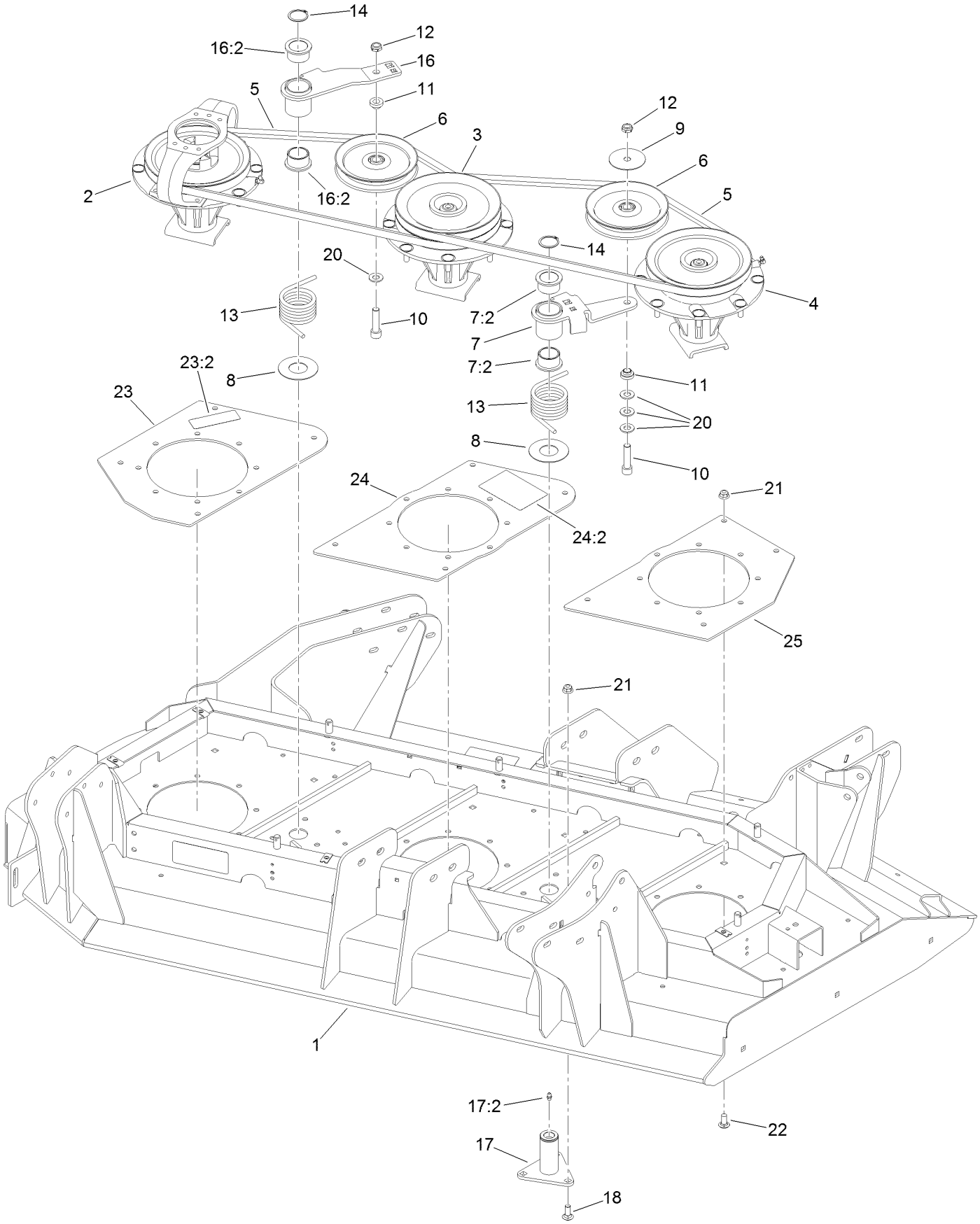

# Right Hand Deck Belt, Pulley and Spindle Assembly (continued)

| Ref. | Part Number | Qty. | Description |
|---|---|---|---|
| 1 | 130-9241 | 1 | Right Deck ASM |
| 2 | 139-1034 | 1 | Single Driving Spindle ASM |
| 3 | 139-1033 | 1 | Double Driven Spindle ASM |
| 4 | 139-1032 | 1 | High Driven Spindle ASM |
| 5 | 112-7377 | 2 | Belt-V, B |
| 6 | 140-5847 | 2 | Pulley-Idler |
| 7 | 117-9176 | 1 | Idler Arm ASM |
| 7:2 | 93-4510 | 2 | Bushing-Caster |
| 8 | 108-1926 | 2 | Washer |
| 9 | 100-3102 | 1 | Washer-Flat |
| 10 | 3274-5 | 2 | Screw-HSH |
| 11 | 108-1924 | 2 | Spacer-Idler |
| 12 | 3296-45 | 2 | Nut-Hex |
| 13 | 108-1921 | 2 | Spring-Torsion |
| 14 | 32120-84 | 2 | Ring-Snap, External |
| 16 | 108-1930 | 1 | Idler Arm ASM |
| 16:2 | 93-4510 | 2 | Bushing-Caster |
| 17 | 137-5640 | 2 | Idler Pivot ASM |
| 17:2 | 302-5 | 1 | Fitting-Grease |
| 18 | 3231-2 | 6 | Bolt-CARR |
| 20 | 3256-26 | 4 | Washer-Flat |
| 21 | 104-8301 | 18 | Nut-HF, NI |
| 22 | 3231-27 | 12 | Screw-CARR |
| 23 | 132-1617 | 1 | Outer Spindle Plate ASM |
| 23:2 | 117-4979 | 1 | Decal-Warning |
| 24 | 132-1618 | 1 | Center Spindle Plate ASM |
| 24:2 | 114-0974 | 1 | Decal-Belt Routing, Deck (RH) |
| 25 | 132-1615-01 | 1 | Plate-Spindle, Inner |

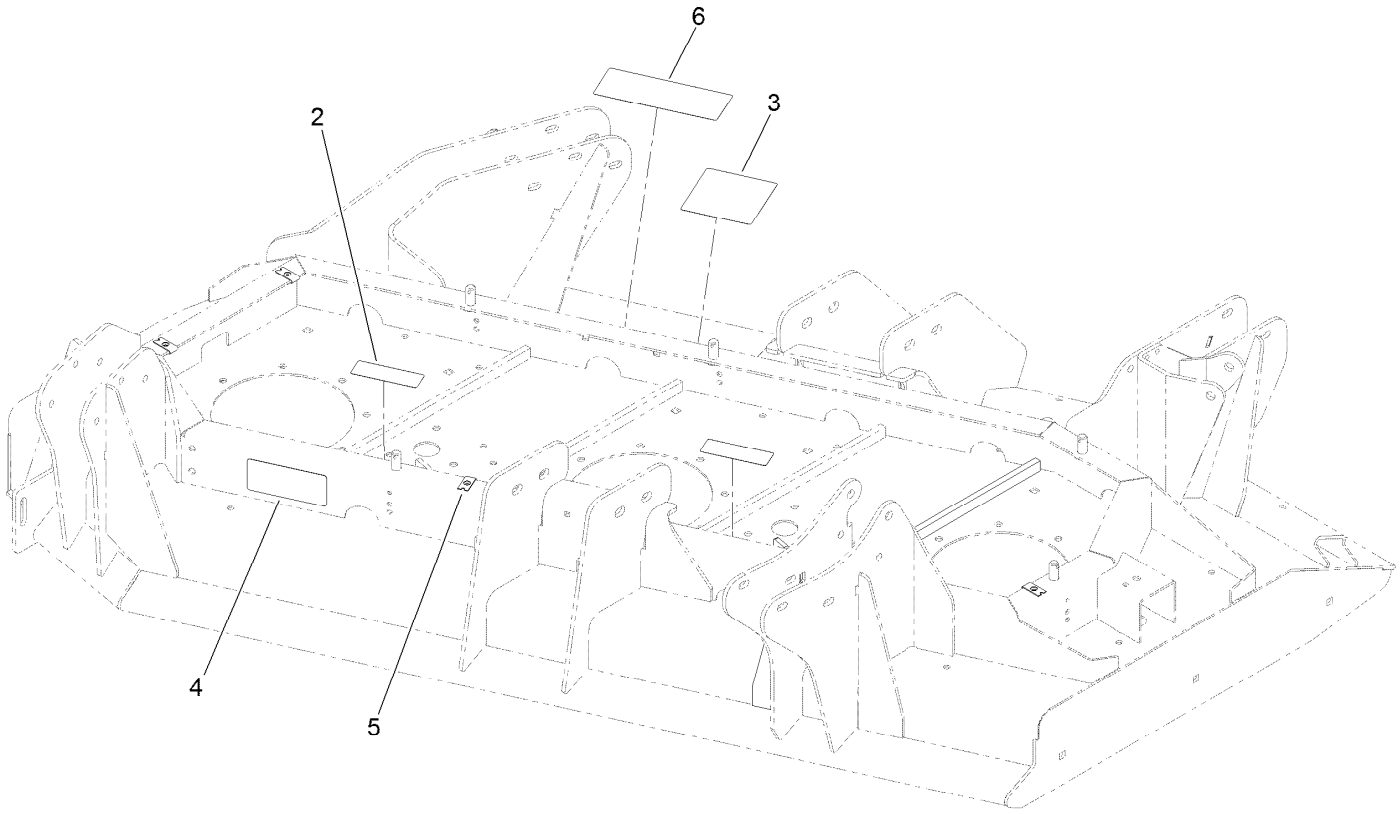


# Right Hand Deck Decal Assembly No. 130-9241

| *Ref.* | *Part Number* | *Qty.* | *Description* |
|---|---|---|---|
| 2 | 117-4979 | 2 | Decal-Warning |
| 3 | 120-6604 | 1 | Decal-Danger |
| 4 | 93-7818 | 1 | Decal-Torque, Blade Bolt |
| 5 | 110-3510 | 4 | Nut-Retainer |
| 6 | 131-6027 | 1 | Decal-HOC |

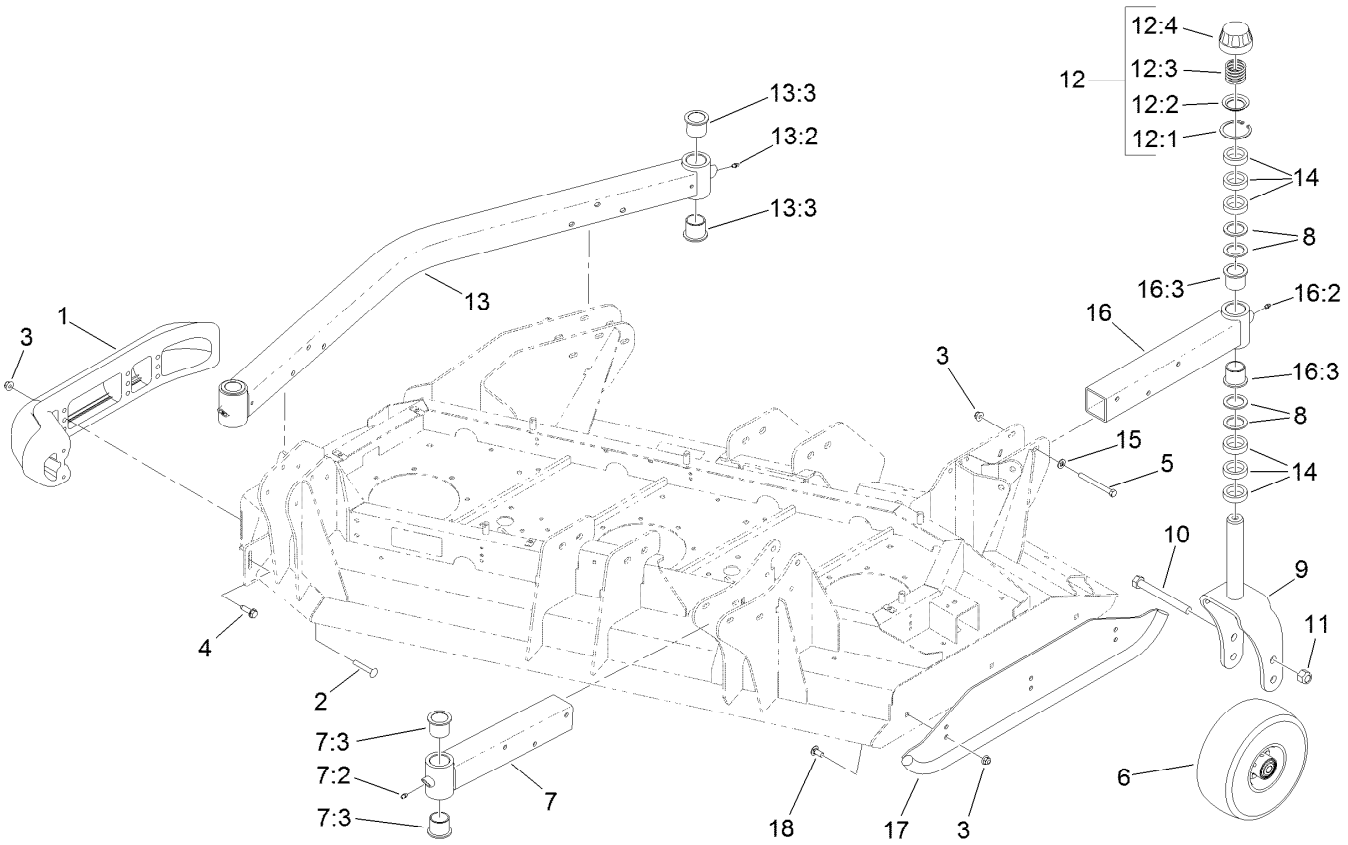


# Right Hand Deck Skid and Caster Wheel Assembly

| Ref. | Part Number | Qty. | Description |
|---|---|---|---|
| 1 | 112-1479 | 1 | Skid-Bumper, Deck |
| 2 | 3231-33 | 2 | Screw-CARR |
| 3 | 104-8301 | 17 | Nut-HF, NI |
| 4 | 9136144 | 1 | Screw-HWHTF |
| 5 | 323-42 | 12 | Screw-HH |
| 6 | 93-4240 | 4 | 10 Inch Wheel ASM |
| 7 | 131-6042 | 1 | Caster Arm ASM |
| 7:2 | 302-5 | 1 | Fitting-Grease |
| 7:3 | 69-6470 | 2 | Bushing-Caster |
| 8 | 69-6860 | 16 | Washer-Thrust |
| 9 | 130-7784-01 | 4 | Fork-Caster |
| 10 | 327-24 | 4 | Screw-HH |
| 11 | 3296-53 | 4 | Nut-Lock, NI |
| 12 | 92-9727 | 4 | HOC Cap ASM |

| Ref. | Part Number | Qty. | Description |
|---|---|---|---|
| 12:1 | 92-5581 | 1 | Ring-Rtng,Snap,Int,Flat |
| 12:2 | 92-5583 | 1 | Washer-Cap |
| 12:3 | 92-9726 | 1 | Spring-Compression |
| 12:4 | 92-8861 | 1 | Cap-HOC |
| 13 | 114-0953 | 1 | HOC Castor Arm ASM |
| 13:2 | 302-5 | 2 | Fitting-Grease |
| 13:3 | 69-6470 | 4 | Bushing-Caster |
| 14 | 69-1510 | 24 | Spacer |
| 15 | 3256-24 | 12 | Washer-Plain |
| 16 | 131-6047 | 1 | Caster Arm ASM |
| 16:2 | 302-5 | 1 | Fitting-Grease |
| 16:3 | 69-6470 | 2 | Bushing-Caster |
| 17 | 131-6034-01 | 1 | Skid-Deck |
| 18 | 3231-27 | 3 | Screw-CARR |

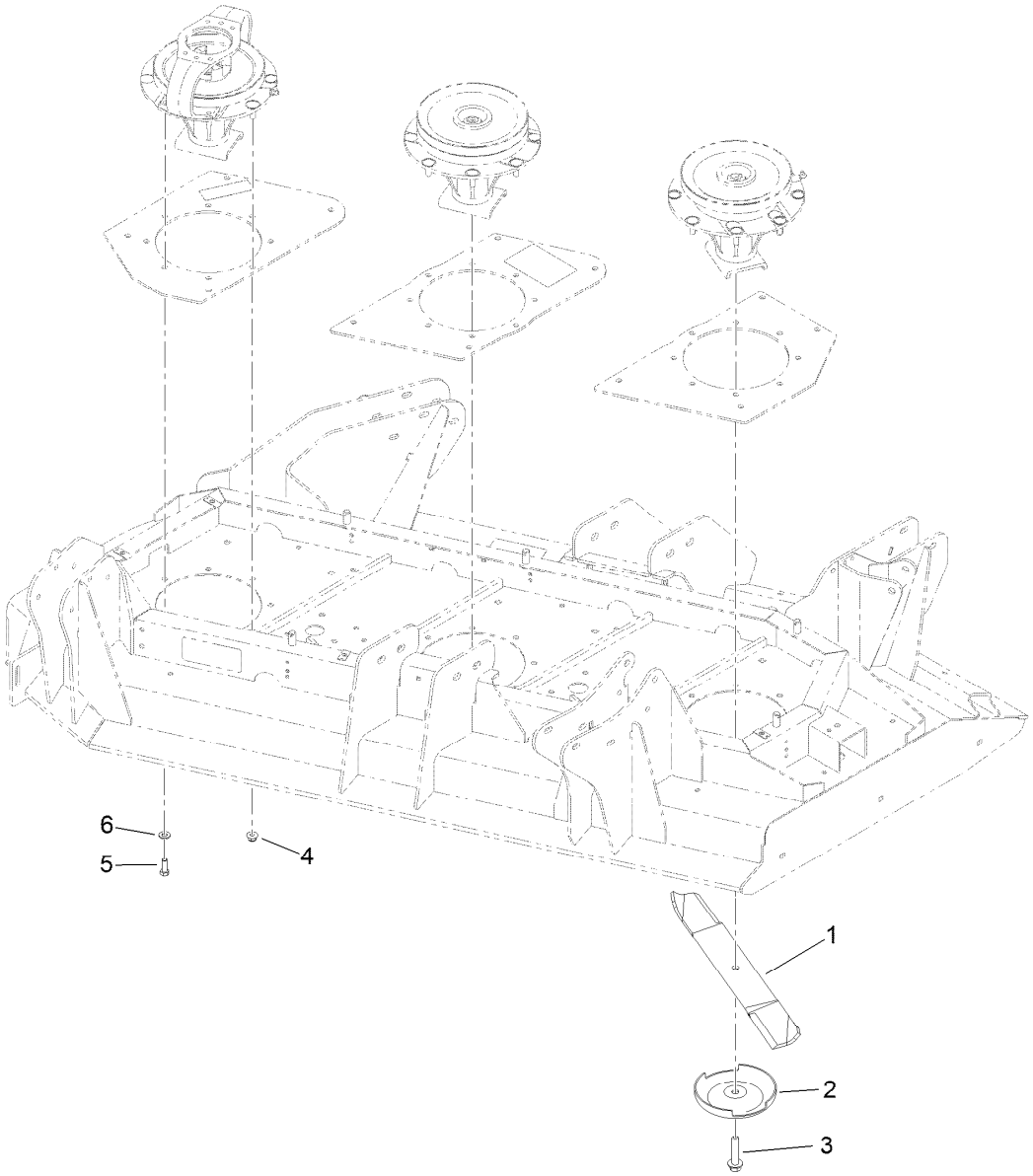


# Right Hand Deck Blade Assembly

| *Ref.* | *Part Number* | *Qty.* | *Description* |
|---|---|---|---|
| 1 | 130-9151 | 3 | Blade-20 In |
| 2 | 72-9361 | 3 | Cup-Scalp, Anti |
| 3 | 92-5816 | 3 | Bolt-Blade |
| 4 | 104-8301 | 20 | Nut-HF, NI |
| 5 | 323-6 | 4 | Screw-HH |
| 6 | 3256-24 | 4 | Washer-Plain |

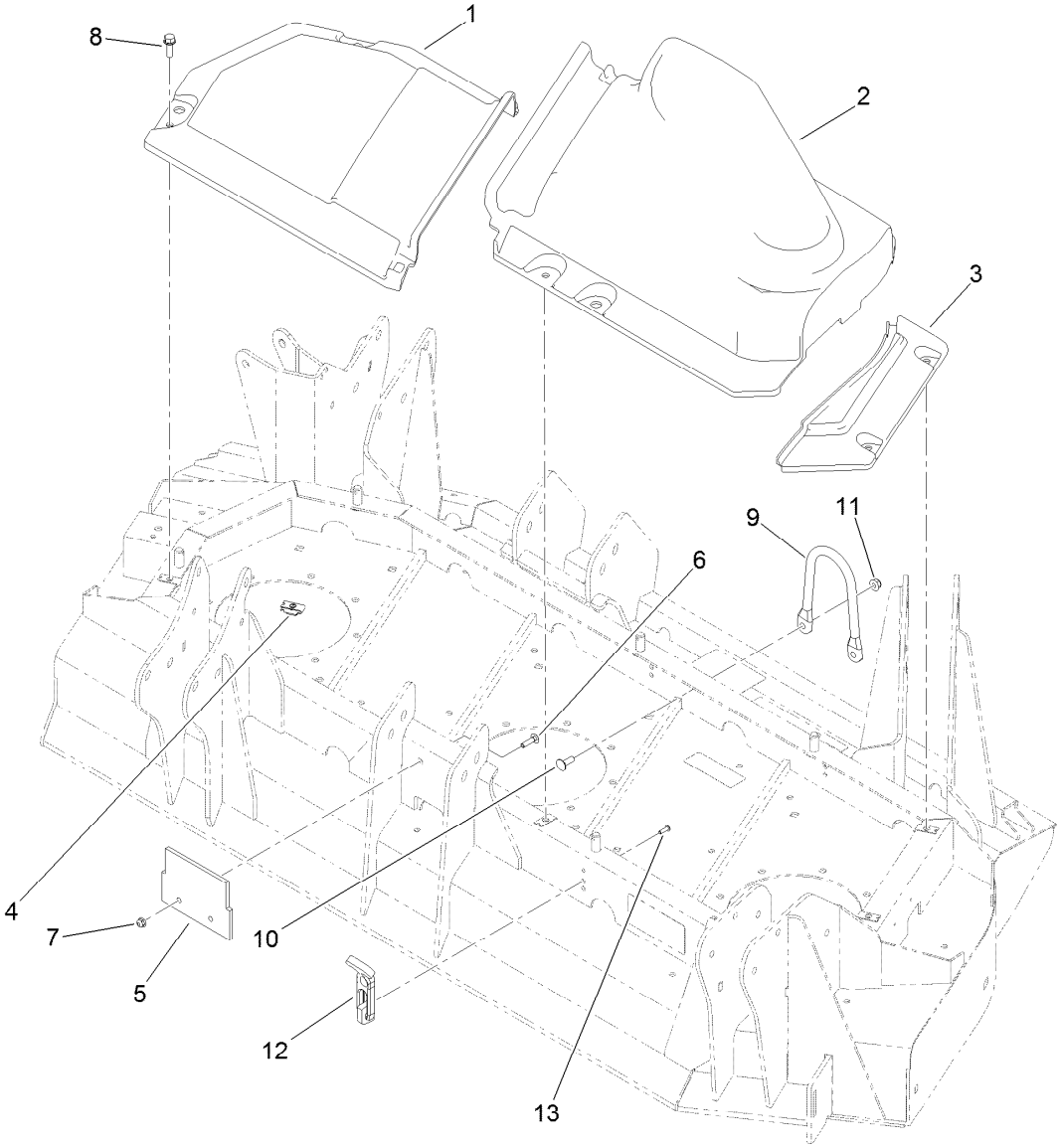


# Right Hand Deck Belt Cover Assembly

| Ref. | Part Number | Qty. | Description |
|---|---|---|---|
| 1 | 114-5635 | 1 | Cover-Deck, RH Wing (Inside) |
| 2 | 114-5636 | 1 | Cover-Deck, RH Wing (Outside) |
| 3 | 114-5638 | 1 | Cover-Deck, RH Wing (Fixed) |
| 4 | 110-3510 | 4 | Nut-Retainer |
| 5 | 136-0079 | 1 | Plug-Rubber |
| 6 | 3229-2 | 2 | Screw-CARR |
| 7 | 104-7201 | 2 | Nut-HF, NI |
| 8 | 3234-29 | 4 | Screw-HHF |
| 9 | 115-3362 | 1 | Guide-Hose |
| 10 | 3230-10 | 2 | Bolt-CARR |
| 11 | 104-8300 | 2 | Nut-HF, NI |
| 12 | 103-4080 | 4 | Latch-Rubber |
| 13 | 3274-39 | 8 | Screw-HSBH |

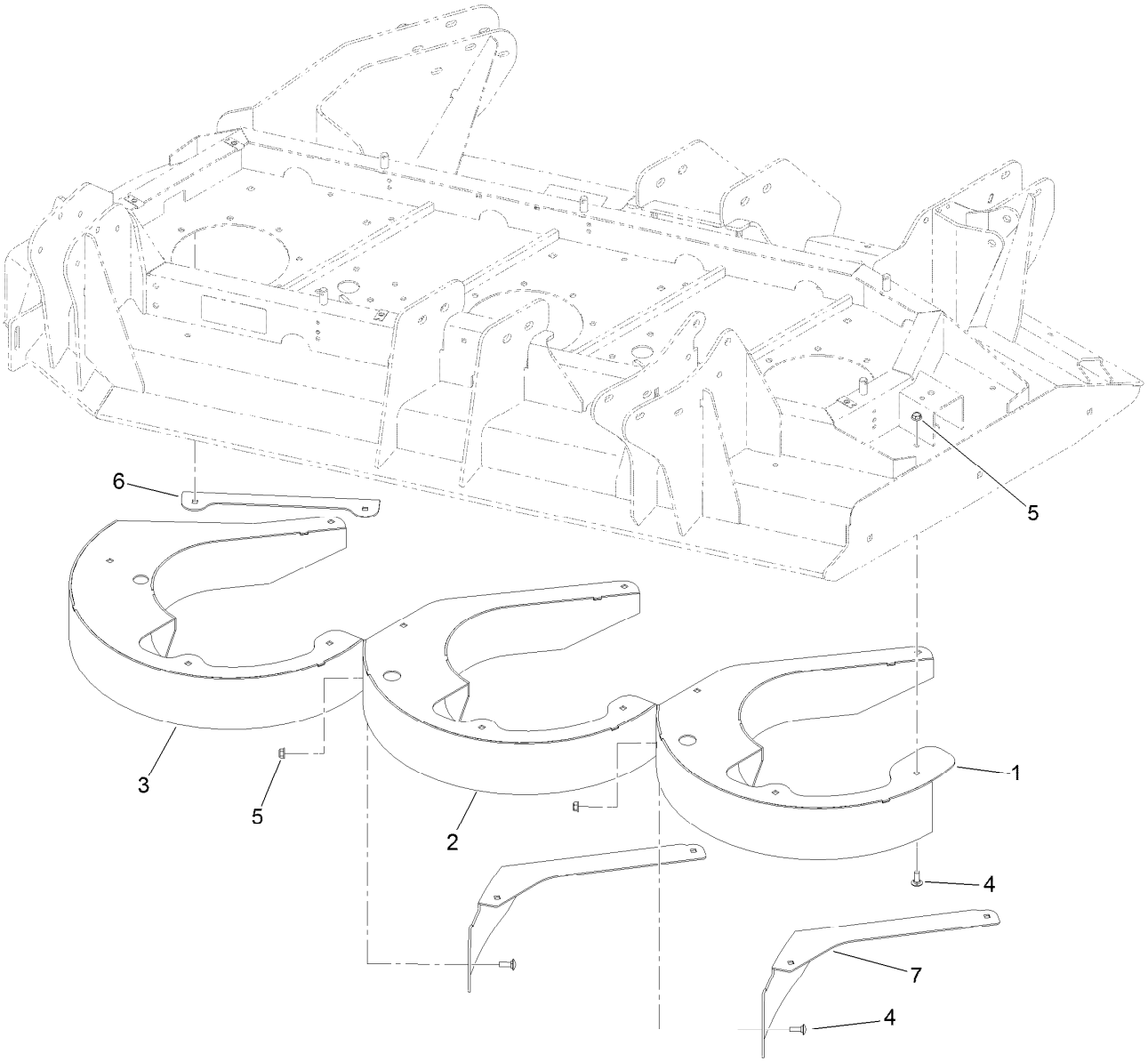


# Right Hand Deck Chamber Assembly

| *Ref.* | *Part Number* | *Qty.* | *Description* |
|---|---|---|---|
| 1 | 132-1637-0P | 1 | Chamber-Right, Inner |
| 2 | 132-1634-0P | 1 | Chamber-Right, Center |
| 3 | 132-1630-0P | 1 | Chamber-Right, Outer |
| 4 | 3230-10 | 20 | Bolt-CARR |
| 5 | 104-8300 | 20 | Nut-HF, NI |
| 6 | 133-2249-0P | 1 | Deflector-RH |
| 7 | 133-2205-0P | 2 | Deflector |

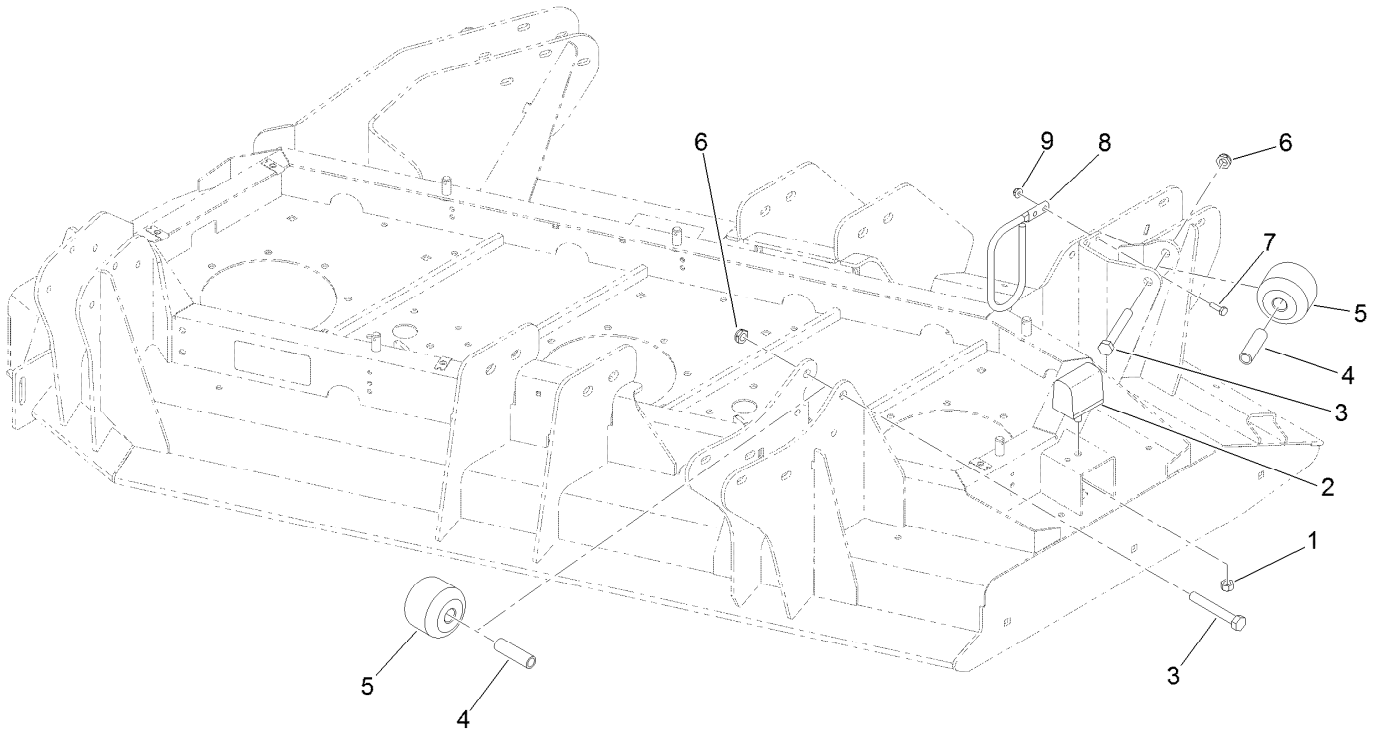


# Right Hand Deck Stop Assembly

| *Ref.* | *Part Number* | *Qty.* | *Description* |
|---|---|---|---|
| 1 | 33025-00 | 1 | Nut-Lock, NI |
| 2 | 87-3470 | 1 | Bumper |
| 3 | 325-14 | 2 | Screw-HH |
| 4 | 115-2144 | 2 | Tube-Spacer |
| 5 | 115-3366 | 2 | Roller |
| 6 | 3296-45 | 2 | Nut-Hex |
| 7 | 321-5 | 2 | Screw-HH |
| 8 | 130-9161 | 1 | Support-Hose |
| 9 | 104-7201 | 2 | Nut-HF, NI |

# Right Hand Deck Impact Arm and Limit Switch Assembly

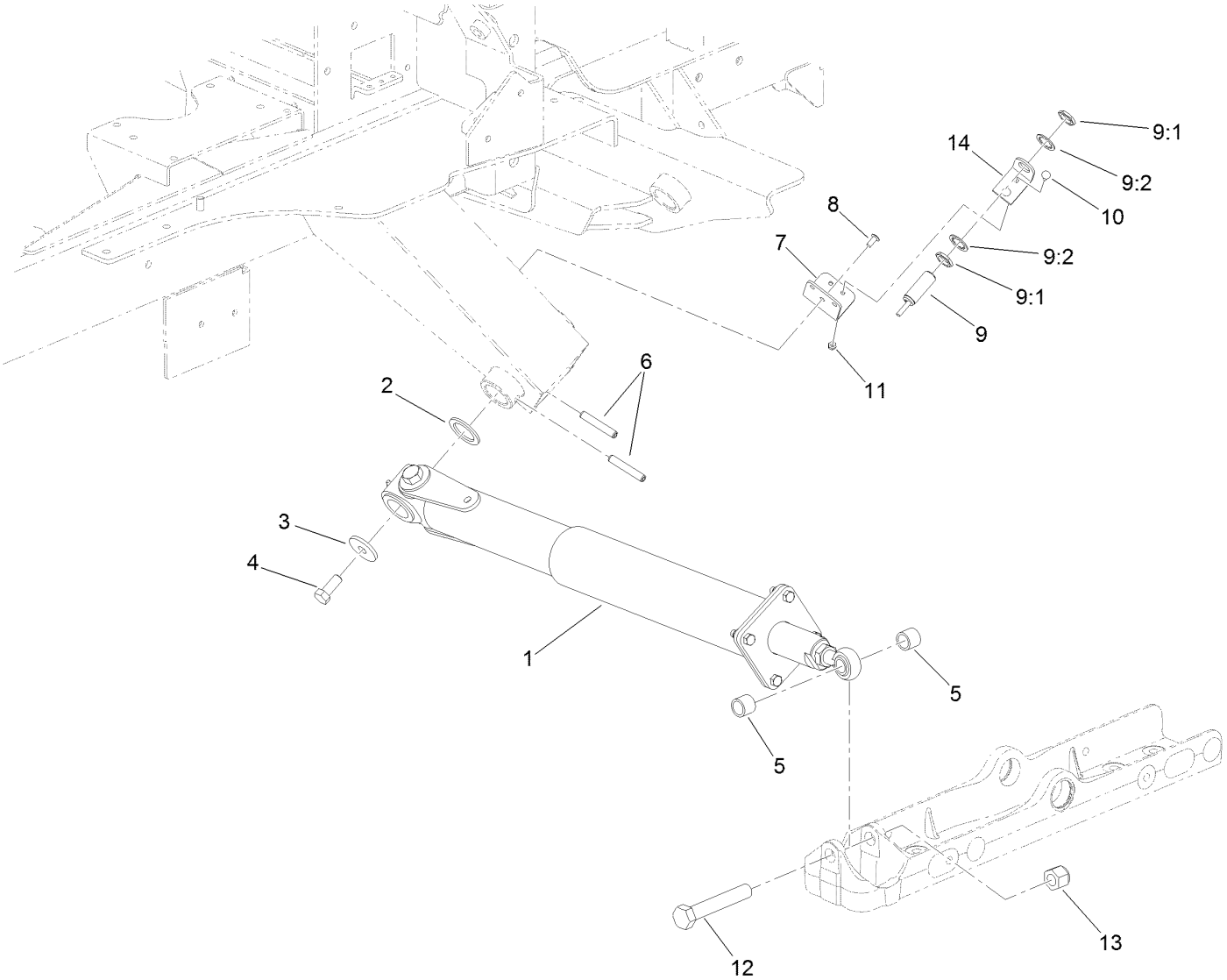

# Right Hand Deck Impact Arm and Limit Switch Assembly (continued)

| Ref. | Part Number | Qty. | Description |
|---|---|---|---|
| 1 | 137-1648 | 1 | Impact Damper ASM |
| 2 | 98-1452 | 1 | Washer-Thrust |
| 3 | 106-2008 | 1 | Washer-Thrust |
| 4 | 325-5 | 1 | Screw-HH |
| 5 | 136-0077 | 2 | Spacer |
| 6 | 117-5479 | 2 | Pin-Spring |
| 7 | 133-2236 | 1 | Bracket-Support |
| 8 | 3290-412 | 3 | Rivet-Blind |

| Ref. | Part Number | Qty. | Description |
|---|---|---|---|
| 9 | 115-5300 | 1 | Proximity Switch ASM |
| 9:1 | 117-3207 | 2 | Nut-Hex |
| 9:2 | 117-3208 | 2 | Washer-Lock, Internal Tooth |
| 10 | 3229-34 | 2 | Screw-CARR |
| 11 | 3296-2 | 2 | Nut-Lock, NI |
| 12 | 328-8 | 1 | Screw-HH |
| 13 | 3296-51 | 1 | Nut-Lock, NI |
| 14 | 133-2235 | 1 | Bracket-Sensor, Side |

# Right Hand Deck Transport Lock Assembly

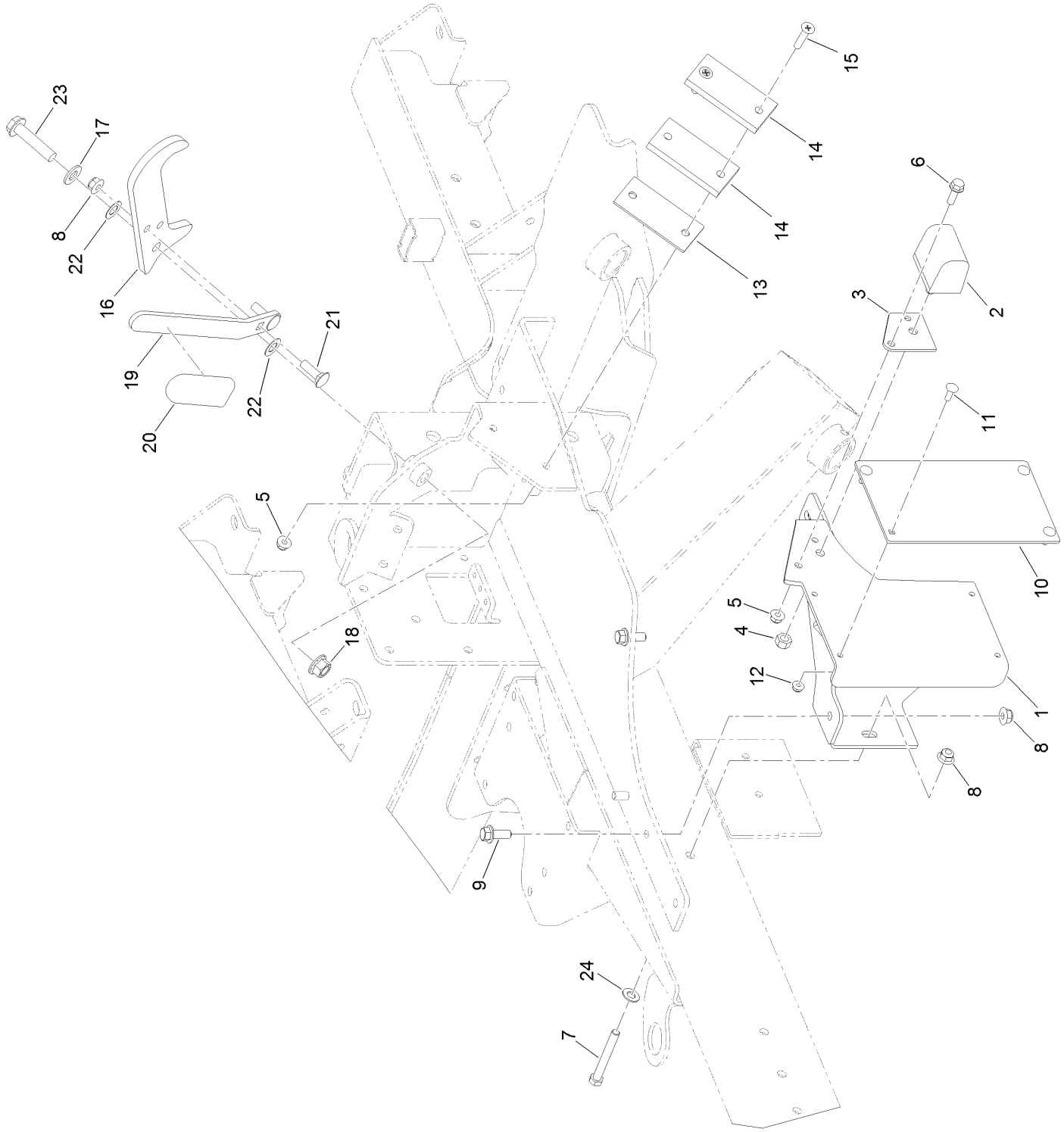

# Right Hand Deck Transport Lock Assembly (continued)

| Ref. | Part Number | Qty. | Description |
|---|---|---|---|
| 1 | 119-8270-01 | 1 | Pad-Transport, RH |
| 2 | 87-3470 | 1 | Bumper |
| 3 | 115-8826 | 1 | Shim-Bumper |
| 4 | 33025-00 | 1 | Nut-Lock, NI |
| 5 | 104-8300 | 3 | Nut-HF, NI |
| 6 | 3234-17 | 1 | Screw-HHF |
| 7 | 323-14 | 1 | Screw-HH |
| 8 | 104-8301 | 5 | Nut-HF, NI |
| 9 | 3234-42 | 2 | Screw-HHF |
| 10 | 117-5476 | 1 | Pad-Roller |
| 11 | 1-807512 | 4 | Bolt-CARR |
| 12 | 104-7201 | 4 | Nut-HF, NI |
| 13 | 114-5675 | 1 | Shim-Pad |
| 14 | 69-9300 | 2 | Pad-Bumper |
| 15 | 32108-107 | 2 | Screw-FH |
| 16 | 119-7723-03 | 1 | Latch-Wing |
| 17 | 3256-26 | 1 | Washer-Flat |
| 18 | 99-5107 | 1 | Nut-Lock |
| 19 | 114-5659-03 | 1 | Handle-Latch |
| 20 | 119-1846 | 1 | Grip |
| 21 | 3231-25 | 2 | Bolt-CARR |
| 22 | 104-3577 | 2 | Washer |
| 23 | 3234-46 | 1 | Screw-HHF |
| 24 | 52-2861 | 1 | Washer |

# Platform Assembly

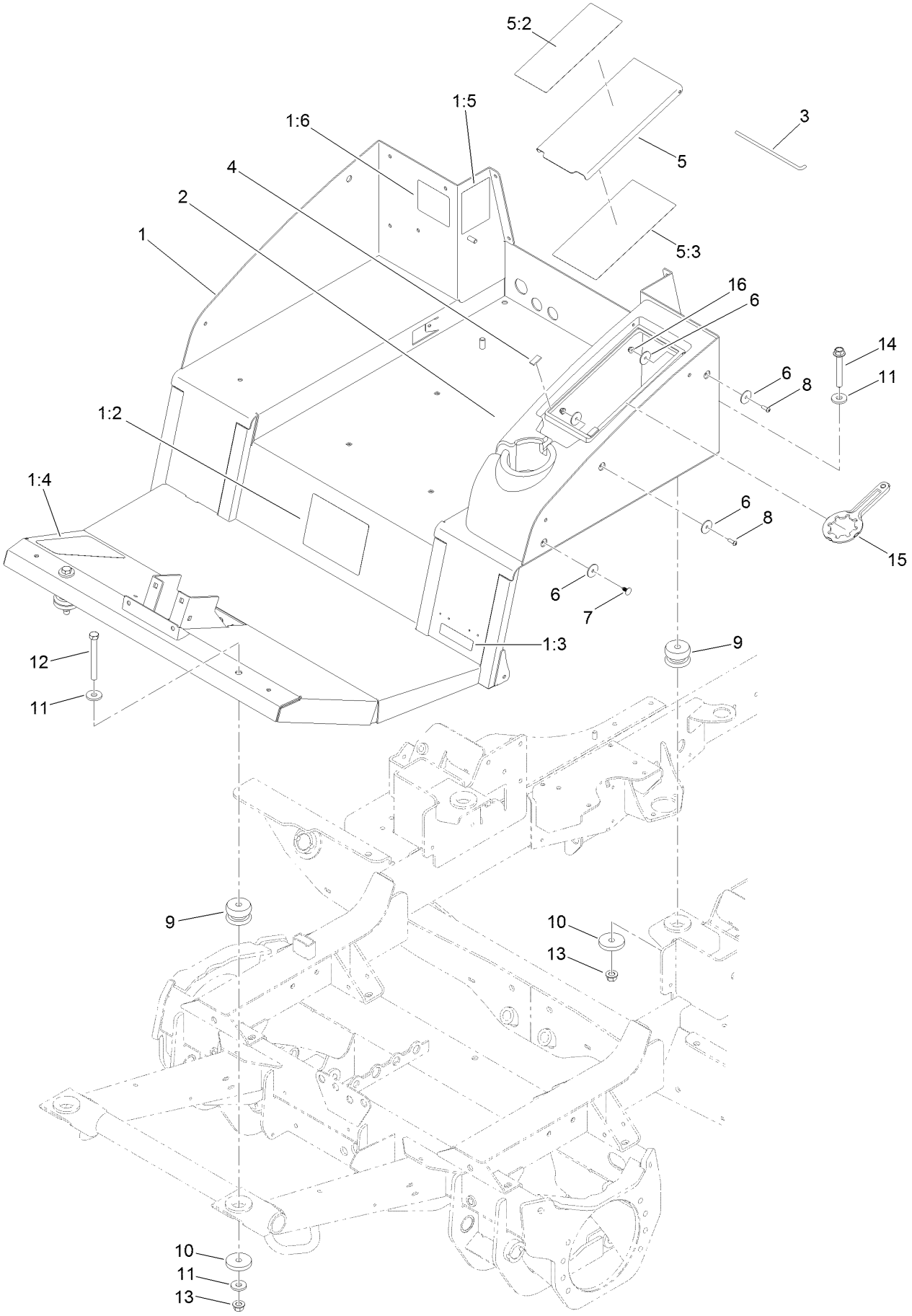

# Platform Assembly (continued)

| Ref. | Part Number | Qty. | Description |
|---|---|---|---|
| 1 | 137-5600 | 1 | Platform ASM |
| 1:2 | 132-1321 | 1 | Decal-Instructions, Operating |
| 1:3 | 133-8062 | 1 | Decal-Spark Arrestor |
| 1:4 | 114-0849 | 1 | Decal-Pedal, Traction |
| 1:5 | 136-0006 | 1 | Decal-Fuse |
| 1:6 | 132-1406 | 1 | Decal-Release, Parking Brake |
| 2 | 112-7316 | 1 | Cover-Storage, Center |
| 3 | 114-5508 | 1 | Rod-Hinge |
| 4 | 115-5417 | 2 | Strip-Foam |
| 5 | 139-0996 | 1 | Lid-Center, Storage |
| 5:2 | 117-2754 | 1 | Decal-Warning |
| 5:3 | 139-0977 | 1 | Decal-Service |
| 6 | 3256-55 | 10 | Washer-Flat |
| 7 | 117-2382 | 6 | Plug-Plastic |
| 8 | 3274-69 | 2 | Screw-HSBH |
| 9 | 110-5954 | 4 | Mount-Center, Bonded |
| 10 | 115-5519 | 4 | Washer-Plain |
| 11 | 92-2651 | 6 | Washer |
| 12 | 702093 | 2 | Screw-HH |
| 13 | 99-5107 | 4 | Nut-Lock |
| 14 | 126-3900 | 2 | Screw-HHF |
| 15 | 138-6367 | 1 | Wrench-Castor Cap/Latch |
| 16 | 104-7201 | 2 | Nut-HF, NI |

# Seat Mount Assembly

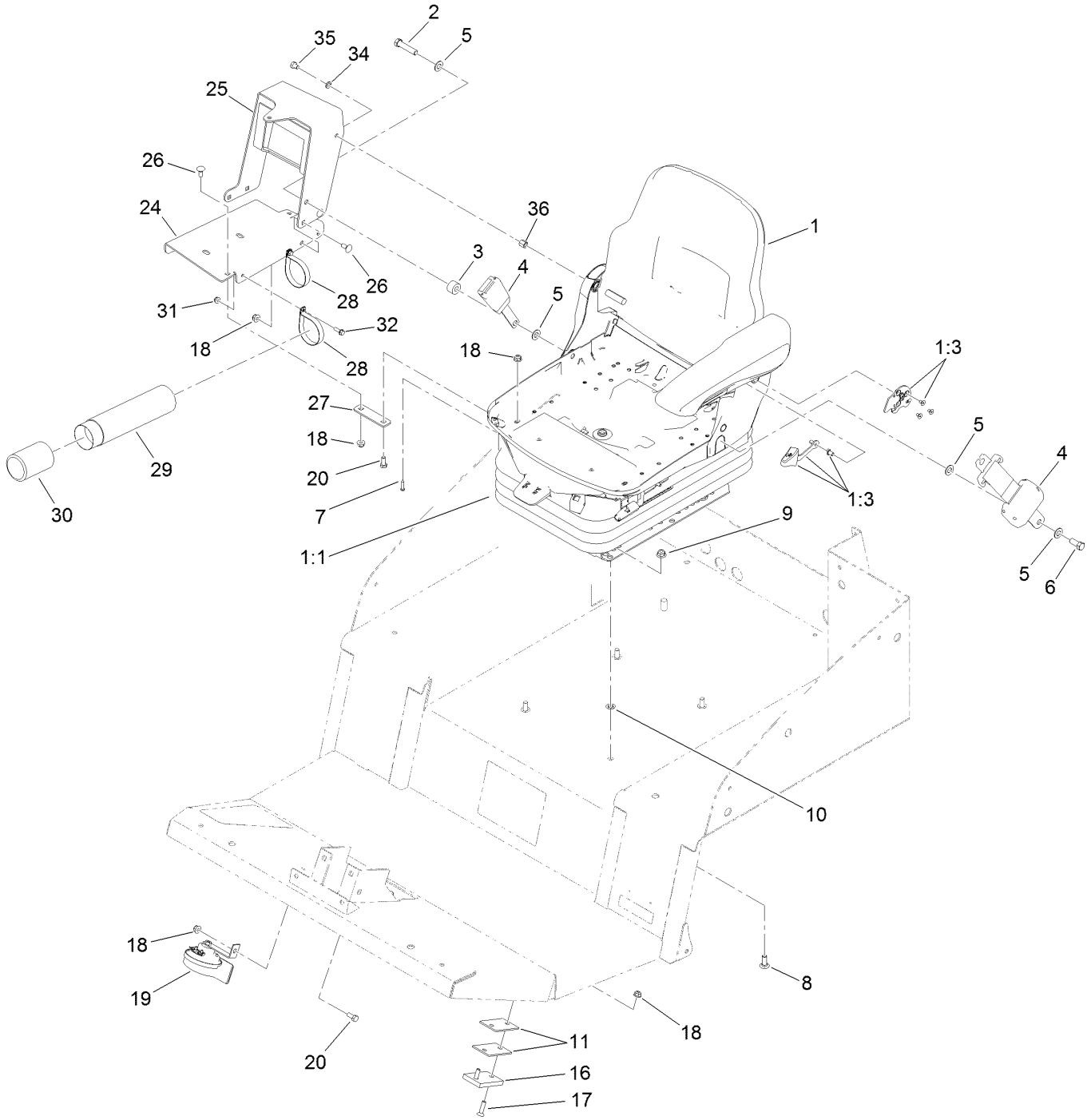

# Seat Mount Assembly (continued)

| Ref. | Part Number | Qty. | Description |
|---|---|---|---|
| 1 | | 1 | Seat And Suspension ASM ● |
| 1:1 | 130-2702 | 1 | Air Ride Seat Suspension |
| 1:3 | 132-1304 | 1 | Backrest Adjustment Kit |
| 2 | 3212-8 | 1 | Screw-HH |
| 3 | 17-7190 | 1 | Spacer-Finger |
| 4 | 110-0413 | 1 | Seatbelt-Retractable |
| 5 | 3256-25 | 4 | Washer-Flat |
| 6 | 3212-4 | 1 | Screw-HH |
| 7 | 119-7742 | 1 | Screw-Cushion |
| 8 | 3231-22 | 4 | Screw-CARR |
| 9 | 104-8301 | 6 | Nut-HF, NI |
| 10 | 107-3154 | 4 | Nut-Push |
| 11 | 114-5553 | 4 | Shim-Pad |
| 16 | 69-9290 | 2 | Pad-Bumper |
| 17 | 32108-103 | 4 | Screw-FH |
| 18 | 104-8300 | 11 | Nut-HF, NI |
| 19 | 116749 | 1 | Horn |
| 20 | 322-3 | 2 | Screw-HH |
| 24 | 131-2355-03 | 1 | Support-Arm |
| 25 | 131-2352-03 | 1 | Channel-Support |
| 26 | 3230-1 | 5 | Bolt-CARR |
| 27 | 131-2351-03 | 1 | Strap-Support |
| 28 | 107-1865 | 2 | R-Clamp |
| 29 | 104-7050 | 1 | Tube-Manual |
| 30 | 104-7048 | 1 | Cap-Housing |
| 31 | 104-7201 | 2 | Nut-HF, NI |
| 32 | 32105-15 | 2 | Screw-HWH |
| 34 | 3253-4 | 1 | Washer-Lock |
| 35 | 33114-010 | 1 | Screw-HH |
| 36 | 112-7405 | 1 | Nut-Hex, Coupling |

● Not serviced separately

# Air Ride Seat Suspension Assembly No. 130-2702

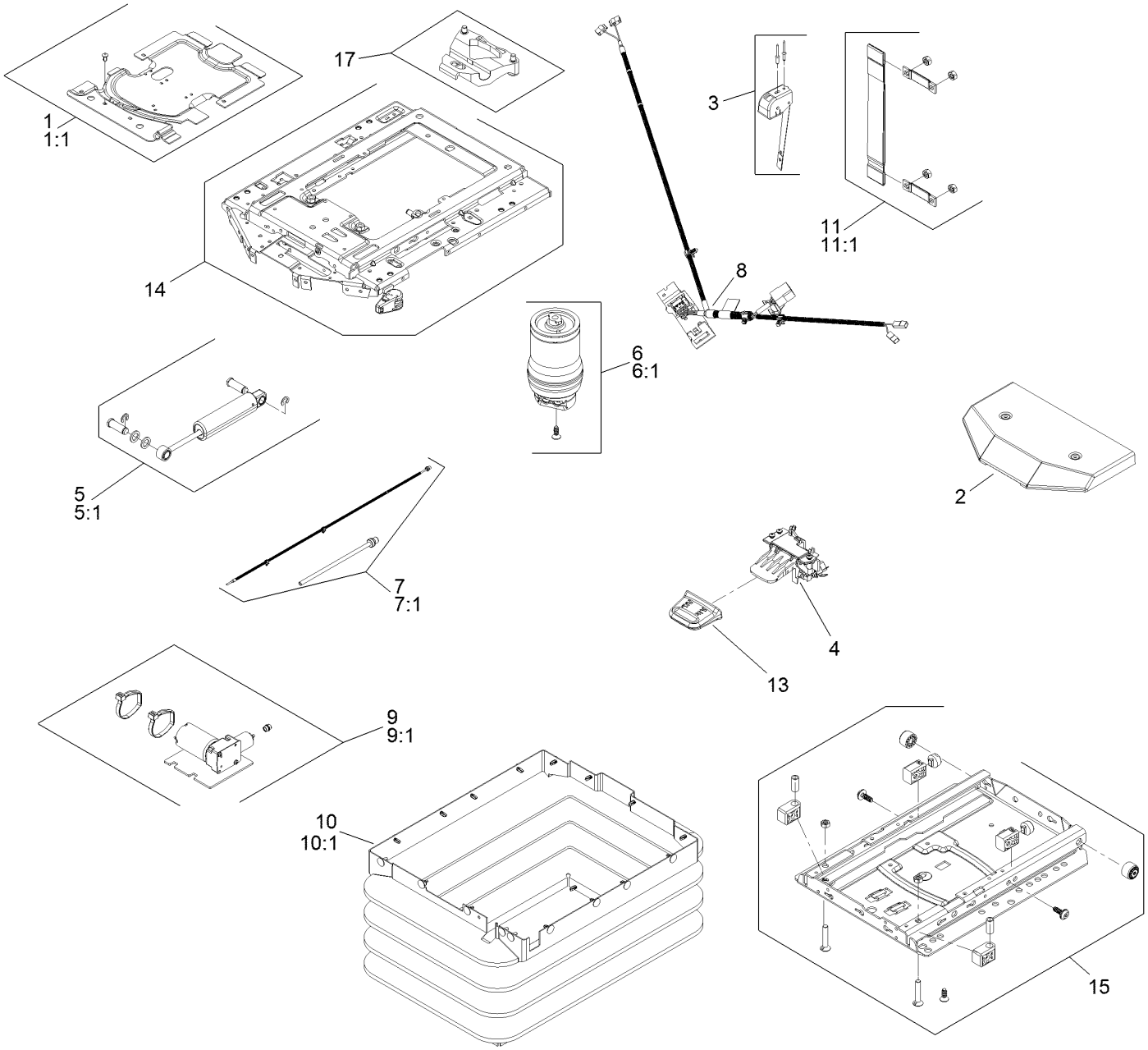

# Air Ride Seat Suspension Assembly No. 130-2702 (continued)

| Ref. | Part Number | Qty. | Description |
|---|---|---|---|
| 1 | 130-2709 | 1 | Cover ASM |
| 1:1 | 130-2710 | 1 | Cover Kit |
| 2 | 108-8027 | 1 | Cover |
| 3 | 130-2711 | 1 | Control-Level |
| 4 | 108-8029 | 1 | Valve-Control, Air |
| 5 | 130-2712 | 1 | Shock Absorber ASM |
| 5:1 | 130-2713 | 1 | Shock Absorber Kit |
| 6 | 130-2714 | 1 | Air Spring ASM |
| 6:1 | 130-2715 | 1 | Air Spring Kit |
| 7 | 130-2716 | 1 | Air Tube ASM |
| 7:1 | 130-2717 | 1 | Air Tube Kit |
| 8 | 130-2718 | 1 | Harness-Wire |

| Ref. | Part Number | Qty. | Description |
|---|---|---|---|
| 9 | 130-2719 | 1 | Compressor |
| 9:1 | 130-2720 | 1 | Compressor Kit |
| 10 | 130-2721 | 1 | Bellows ASM |
| 10:1 | 130-2722 | 1 | Bellows Kit |
| 11 | 130-2723 | 1 | Tether |
| 11:1 | 130-2724 | 1 | Tether Kit |
| 12 | 130-2725 | 1 | Wear Parts Kit ● |
| 13 | 130-2726 | 1 | Handle |
| 14 | 130-2727 | 1 | Upper Suspension Kit |
| 15 | 130-2728 | 1 | Lower Suspension Kit |
| 16 | 130-2729 | 1 | Adjuster Mounting Kit ● |
| 17 | 130-2730 | 1 | Limiter-Thrust |

● Not illustrated

# Control Console Assembly

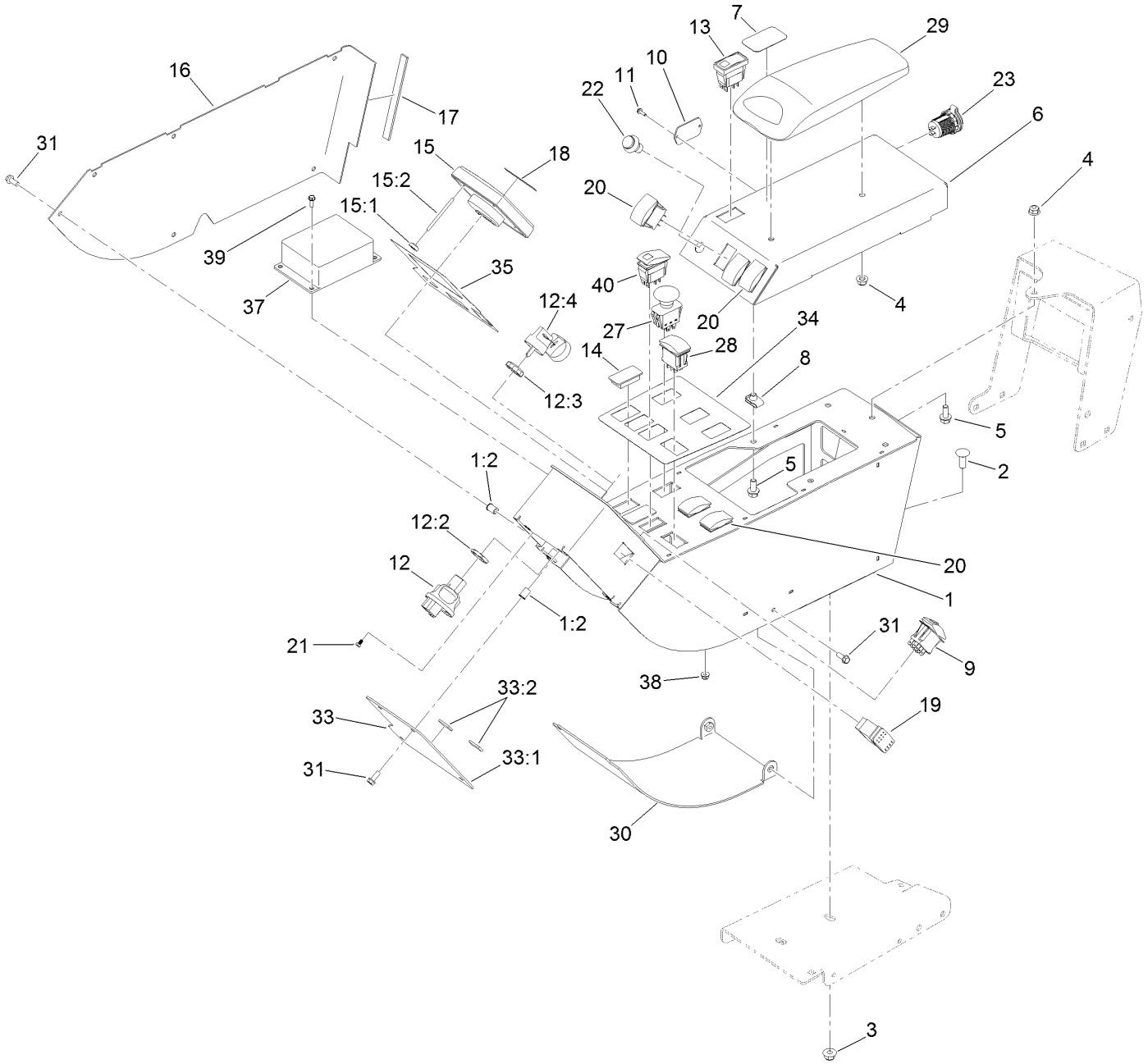

# Control Console Assembly (continued)

| Ref. | Part Number | Qty. | Description |
|---|---|---|---|
| 1 | 136-0071 | 1 | Console Arm ASM |
| 1:2 | 32148-6 | 10 | Nut-Clinch |
| 2 | 3231-22 | 2 | Screw-CARR |
| 3 | 104-8301 | 2 | Nut-HF, NI |
| 4 | 104-8300 | 3 | Nut-HF, NI |
| 5 | 3234-5 | 5 | Screw-HHF |
| 6 | 136-1072-03 | 1 | Panel-Control Arm |
| 7 | 136-1003 | 1 | Decal-Console, Cruise |
| 8 | 94-2413 | 4 | Nut-U |
| 9 | 111-2254 | 1 | Switch-Rocker, On-None-On |
| 10 | 121-1630 | 1 | Plate-Cover |
| 11 | 32144-18 | 2 | Screw-HWH |
| 12 | 121-5159 | 1 | Switch-Ignition |
| 12:2 | 121-5160 | 1 | Nut-Hex |
| 12:3 | 121-5161 | 1 | Nut-Face |
| 12:4 | 121-5162 | 1 | Set-Key, Ignition |
| 13 | 104-9007 | 1 | Switch-Rocker |
| 14 | 99-7420 | 3 | Plug-Hole |
| 15 | 125-5320 | 1 | Infocenter Kantrak 2700 |
| 15:1 | 115-8884 | 4 | Nut-Thumb |
| 15:2 | 115-8885 | 4 | Stud |
| 16 | 136-0069-03 | 1 | Cover-Right |
| 17 | 131-2222 | 1 | Strip-Foam |
| 18 | 114-5554 | 1 | Decal-Center, Info |
| 19 | 95-8999 | 1 | Switch-Rocker, On-None-On |
| 20 | 100-1535 | 5 | Switch-Rocker, (On)-Off-(On) |
| 21 | 132-7668 | 4 | Screw-PPH |
| 22 | 125-7996 | 1 | Switch-Pb, Momentary |
| 23 | 131-8388 | 1 | Socket-USB |
| 27 | 93-9999 | 1 | Switch-PTO |
| 28 | 107-8034 | 1 | Switch-Rocker, On-Off-On |
| 29 | 131-9637 | 1 | Armrest-Quick Find |
| 30 | 131-2340-03 | 1 | Cover-Gate |
| 31 | 32144-85 | 12 | Screw-HWH Thd Form |
| 33 | 131-2338 | 1 | Top Front Cover ASM |
| 33:1 | 131-2339-03 | 1 | Cover-Front, Top |
| 33:2 | 115-5417 | 2 | Strip-Foam |
| 34 | 136-1004 | 1 | Decal-Console, Main |
| 35 | 131-2348 | 1 | Decal-Console, Display |
| 37 | 105-4515 | 1 | Flasher-Rate, Dual |
| 38 | 120-4578 | 4 | Nut-HF |
| 39 | 32105-23 | 4 | Screw |
| 40 | 119-7769 | 1 | Switch-Rocker, On/None/On |

# Traction Pedal Assembly

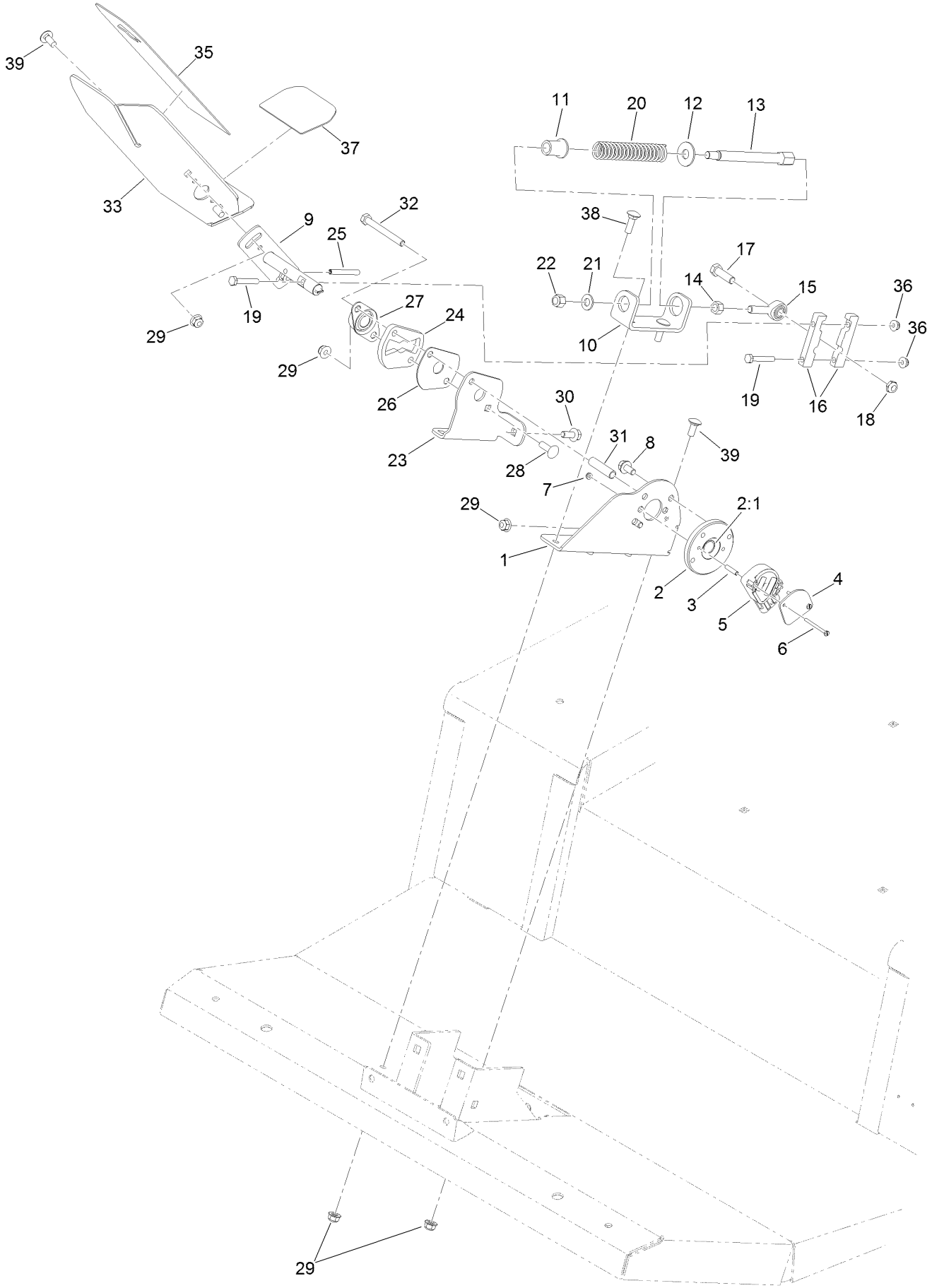

# Traction Pedal Assembly (continued)

| Ref. | Part Number | Qty. | Description |
|---|---|---|---|
| 1 | 136-4384-0P | 1 | Bracket-Sender |
| 2 | 117-5445 | 1 | Bushing Hub ASM |
| 2:1 | 95-7497 | 1 | Bushing-Wheel |
| 3 | 114-5608 | 2 | Spacer-Standoff |
| 4 | 114-5595 | 1 | Plate-Capture |
| 5 | 114-5609 | 1 | Sensor-Position |
| 6 | 32105-25 | 2 | Screw-SHH |
| 7 | 3296-9 | 2 | Nut-Hex |
| 8 | 114-7728 | 2 | Screw-HHF, Patch |
| 9 | 131-2245 | 1 | Shaft-Pedal, Traction |
| 10 | 131-2252-0P | 1 | Bracket-Spring |
| 11 | 92-7610 | 1 | Retainer-Spring |
| 12 | 3256-5 | 1 | Washer-Flat |
| 13 | 117-5446 | 1 | Shaft-Spring |
| 14 | 3219-3 | 1 | Nut-Hex |
| 15 | 2411-36 | 1 | Bearing-End, Rod |
| 16 | 117-5459 | 2 | Block-Clamp |
| 17 | 323-7 | 1 | Screw-HH |
| 18 | 3296-59 | 1 | Nut-Lock, NI |
| 19 | 321-37 | 2 | Screw-HH |

| Ref. | Part Number | Qty. | Description |
|---|---|---|---|
| 20 | 84-9100 | 1 | Spring |
| 21 | 3256-24 | 1 | Washer-Plain |
| 22 | 3296-6 | 1 | Nut-Lock |
| 23 | 131-2250-0P | 1 | Bracket-Pedal, Outer |
| 24 | 117-5454 | 1 | Plate-Butterfly |
| 25 | 32121-78 | 1 | Pin-Roll |
| 26 | 117-5455 | 1 | Plate-Cover |
| 27 | 256-236 | 1 | Bearing-Mount, Flange |
| 28 | 3230-22 | 1 | Screw-CARR |
| 29 | 104-8300 | 7 | Nut-HF, NI |
| 30 | 3234-47 | 1 | Screw-HHF |
| 31 | 93-7960 | 1 | Spacer |
| 32 | 322-14 | 1 | Screw-HH |
| 33 | 136-4368-01 | 1 | Pedal-Traction |
| 35 | 93-5347 | 1 | Abrasive-Pedal |
| 36 | 104-7201 | 2 | Nut-HF, NI |
| 37 | 93-5368 | 1 | Abrasive-Pedal |
| 38 | 3230-2 | 2 | Bolt-CARR |
| 39 | 3230-23 | 5 | Bolt-CARR |

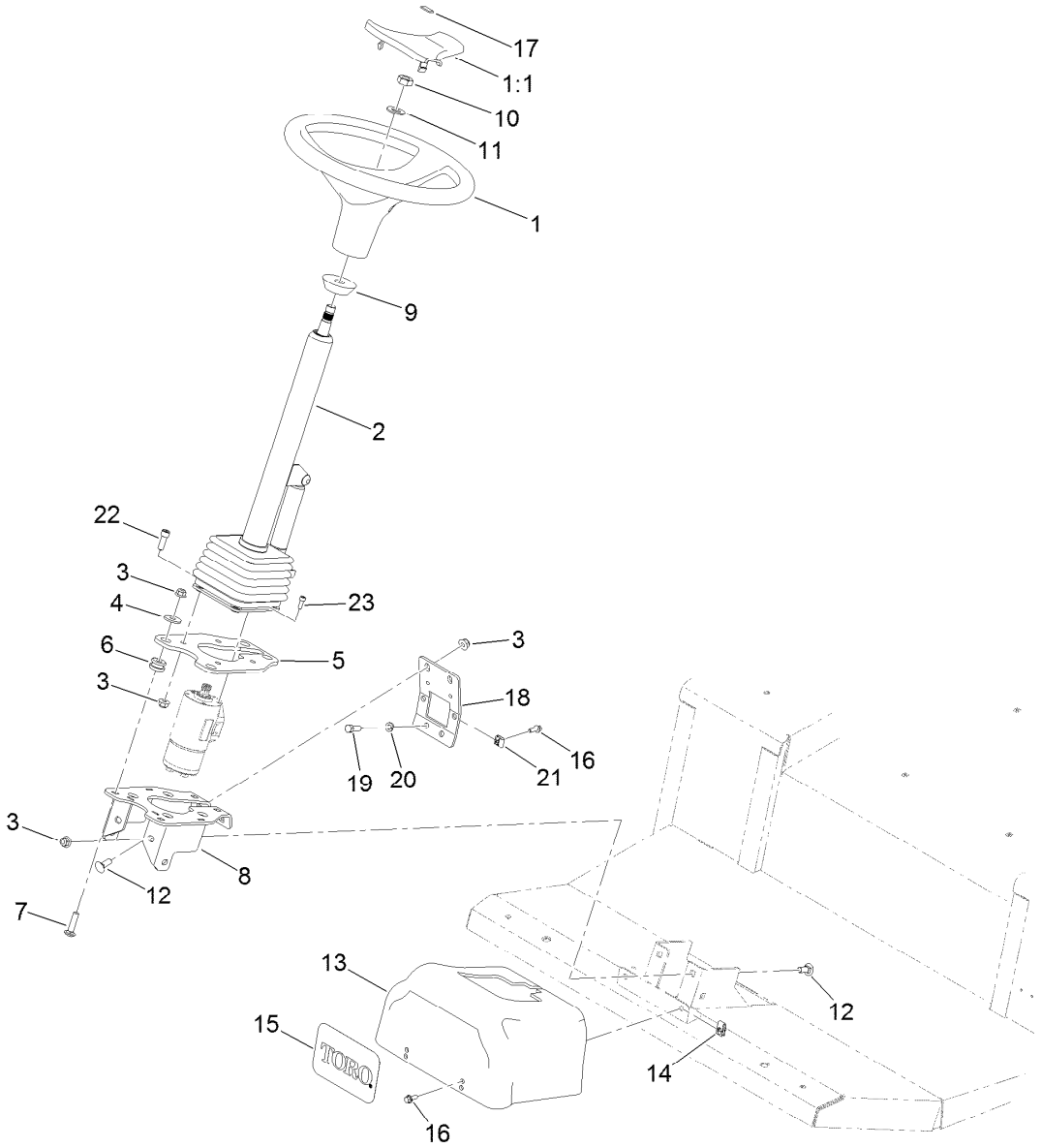


# Steering Column Assembly

| Ref. | Part Number | Qty. | Description |
|---|---|---|---|
| 1 | 98-1471 | 1 | Wheel-Steering |
| 1:1 | 98-1468 | 1 | Cover-Wheel, Steering |
| 2 | 132-6230 | 1 | Steering Tilt Column ASM |
| 3 | 104-8301 | 14 | Nut-HF, NI |
| 4 | 63-8410 | 4 | Washer |
| 5 | 137-5588-0P | 1 | Plate-Mount, Column |
| 6 | 63-9750 | 4 | Mount |
| 7 | 3231-26 | 4 | Screw-CARR |
| 8 | 137-5590-0P | 1 | Mount |
| 9 | 93-5429 | 1 | Collar-Foam |
| 10 | 3296-33 | 1 | Nut-Lock, NI |
| 11 | 3256-27 | 1 | Washer-Flat |

| Ref. | Part Number | Qty. | Description |
|---|---|---|---|
| 12 | 3231-2 | 6 | Bolt-CARR |
| 13 | 137-5607 | 1 | Cover-Steering |
| 14 | 107069 | 2 | Clip |
| 15 | 105-1217 | 1 | Decal |
| 16 | 3234-4 | 4 | Screw-HHF |
| 17 | 98-1459 | 1 | Decal |
| 18 | 137-5606-0P | 1 | Support-Column |
| 19 | 323-6 | 2 | Screw-HH |
| 20 | 3253-21 | 2 | Washer-Lock |
| 21 | 609900 | 2 | Nut-Speed |
| 22 | 3274-7 | 4 | Screw-HSH |
| 23 | 105-2409 | 4 | Screw-HSH |

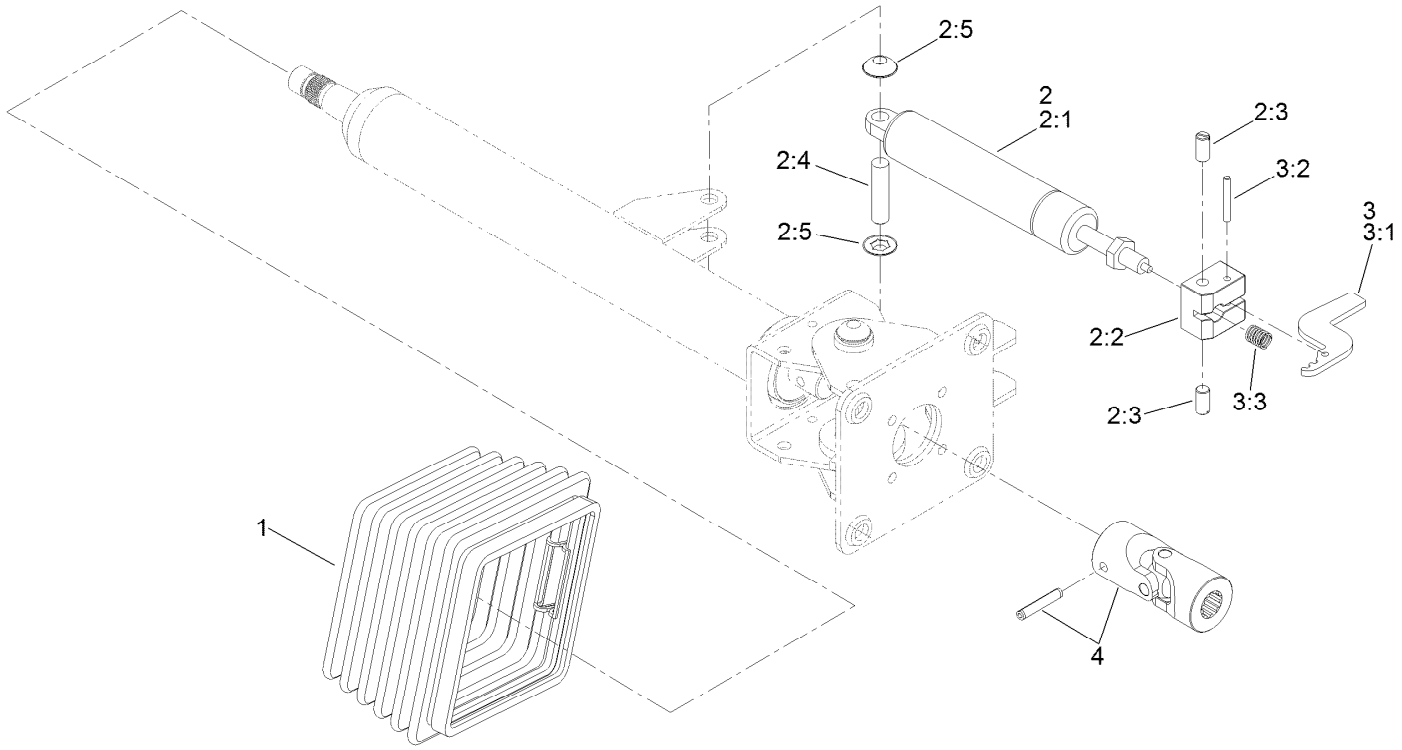


# Steering Column Assembly No. 132-6230

| Ref. | Part Number | Qty. | Description |
|---|---|---|---|
| 1 | 110-6462 | 1 | Bellows-Rubber |
| 2 | 110-6463 | 1 | Cylinder Service Kit |
| 2:1 | | 1 | Cylinder-Gas ● |
| 2:2 | | 1 | Block-Pedal ● |
| 2:3 | | 2 | Bolt ● |
| 2:4 | | 1 | Pin ● |
| 2:5 | | 2 | Washer-Lock ● |
| 3 | 136-4385 | 1 | Pedal Service Kit |
| 3:1 | | 1 | Pedal ● |
| 3:2 | | 1 | Pin ● |
| 3:3 | | 1 | Spring ● |
| 4 | 120-6256 | 1 | Universal Joint Kit |

● Not serviced separately

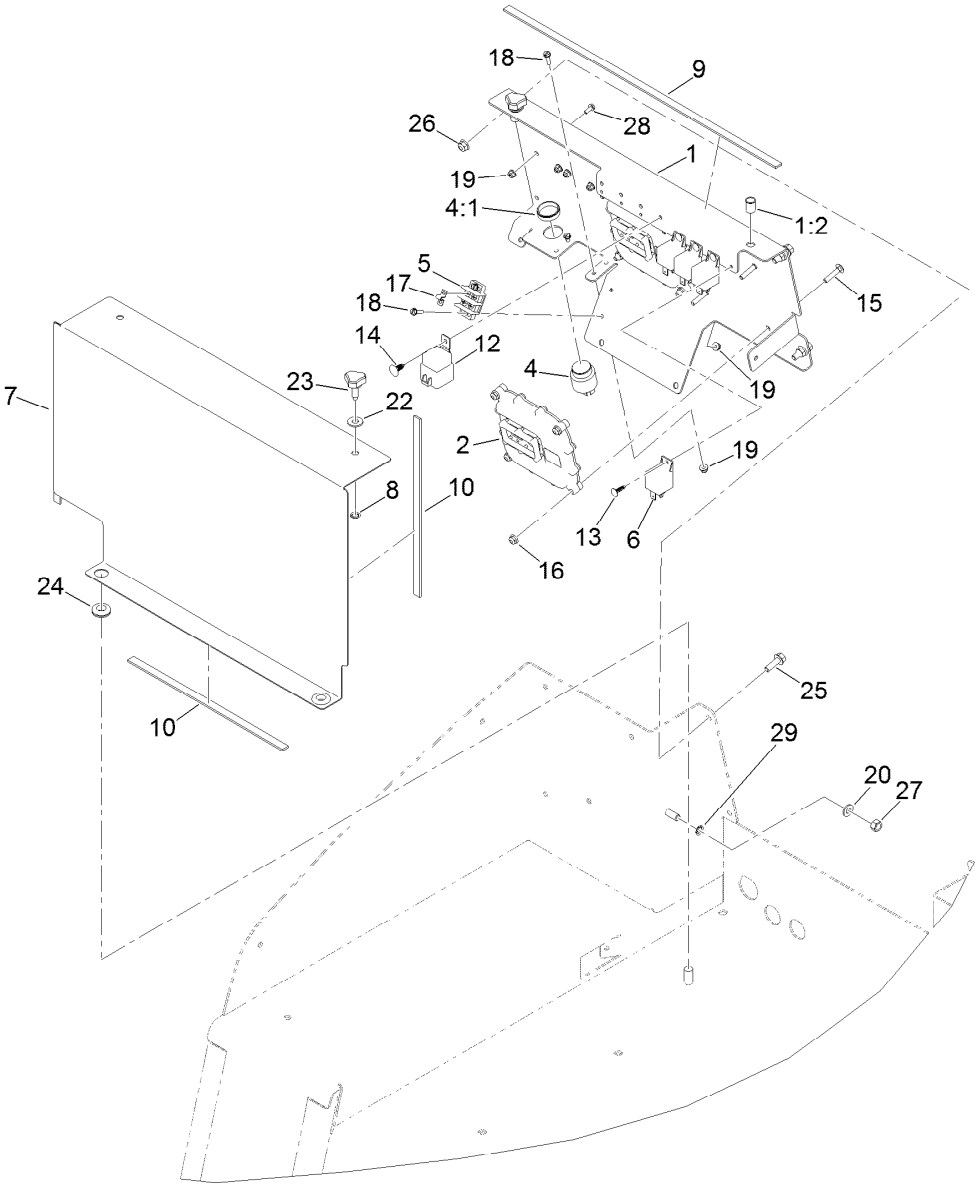


# Front Electrical Component Assembly

| Ref. | Part Number | Qty. | Description |
|---|---|---|---|
| 1 | 132-1332 | 1 | Electrical Plate ASM |
| 1:2 | 32148-9 | 2 | Nut-Clinch |
| 2 | 114-3321 | 2 | Controller-Tec |
| 4 | 80-9330 | 1 | Audio Alarm ASM |
| 4:1 | 104-5107 | 1 | Nut-Plastic, Knurled |
| 5 | 42862 | 1 | Block-Terminal, Ground |
| 6 | 99-7435 | 4 | Relay |
| 7 | 130-9034-01 | 1 | Plate-Cover, Electrical |
| 8 | 32151-72 | 2 | Ring-Retaining |
| 9 | 131-2221 | 1 | Strip-Foam |
| 10 | 130-9174 | 3 | Foam-Cooler, Short |
| 12 | 99-7430 | 1 | Relay-Mini |
| 13 | 125-8067 | 4 | Plug-Plastic |
| 14 | 104-0395 | 1 | Plug-Plastic |

| Ref. | Part Number | Qty. | Description |
|---|---|---|---|
| 15 | 3229-3 | 8 | Screw-CARR |
| 16 | 104-7201 | 8 | Nut-HF, NI |
| 17 | 42863 | 1 | Strip-Jumper |
| 18 | 32105-13 | 6 | Screw-HWH |
| 19 | 120-4578 | 10 | Nut-HF |
| 20 | 3256-38 | 1 | Washer-Flat |
| 22 | 3256-3 | 2 | Washer-Flat |
| 23 | 95-9648 | 2 | Knob |
| 24 | 99-3481 | 2 | Grommet |
| 25 | 3234-29 | 4 | Screw-HHF |
| 26 | 104-8300 | 4 | Nut-HF, NI |
| 27 | 32146-2 | 1 | Nut-Hex |
| 28 | 3290-321 | 4 | Screw-HWH |
| 29 | 3254-6 | 1 | Washer-Lock, Internal |

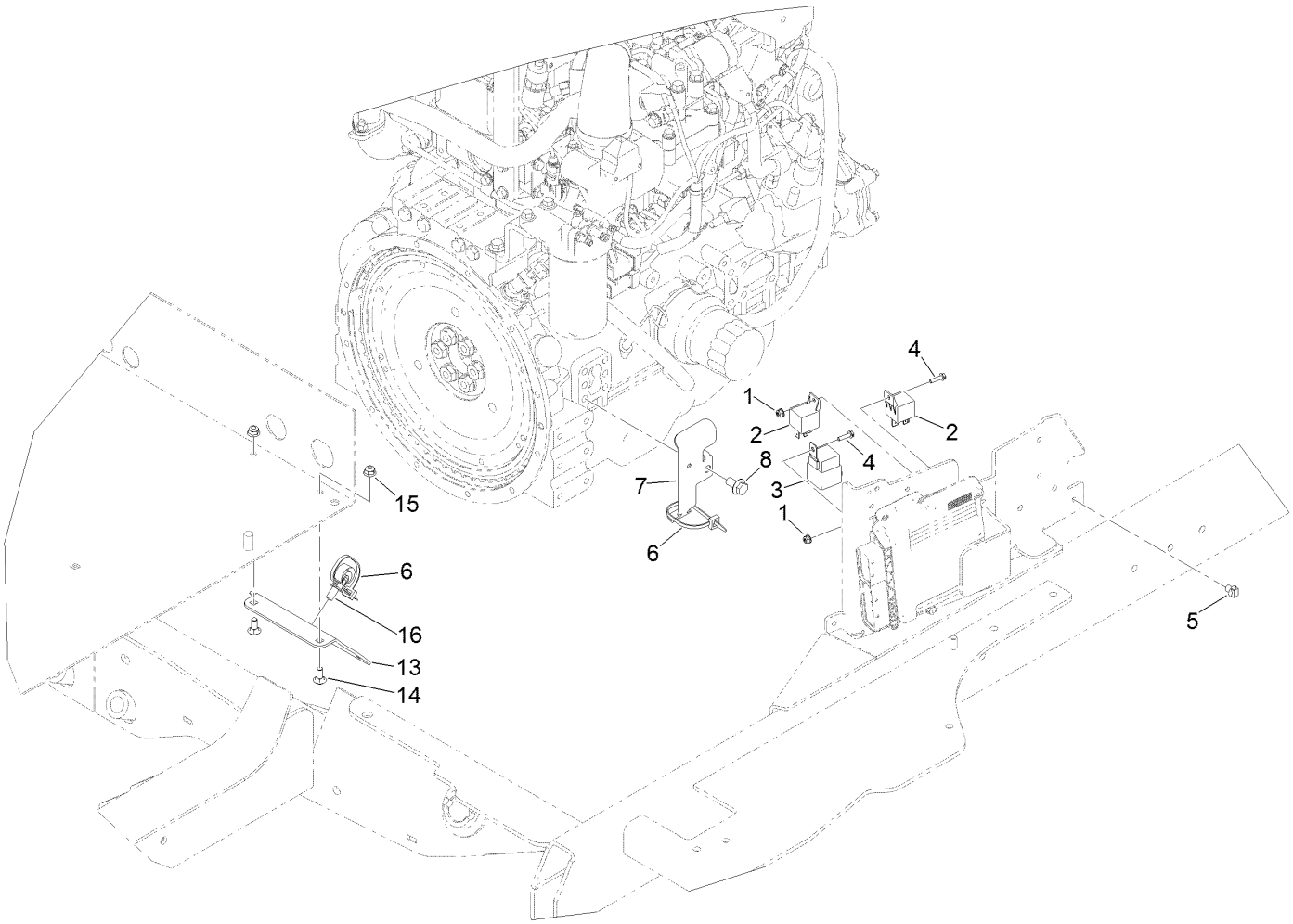


# Mid Electrical Component Assembly

| *Ref.* | *Part Number* | *Qty.* | *Description* |
|---|---|---|---|
| 1 | 120-4578 | 2 | Nut-HF |
| 2 | 99-7435 | 2 | Relay |
| 3 | 99-7430 | 1 | Relay-Mini |
| 4 | 32105-13 | 2 | Screw-HWH |
| 5 | 32180-030 | 1 | Clip-Tie |
| 6 | 3290-378 | 2 | Tie-Cable |
| 7 | 132-9627 | 1 | Bracket-Harness |
| 8 | 33105-020 | 1 | Screw-HHF |
| 13 | 136-0074-01 | 1 | Bracket-Bulkhead, Electrical |
| 14 | 3230-1 | 2 | Bolt-CARR |
| 15 | 104-8300 | 2 | Nut-HF, NI |
| 16 | 32180-031 | 1 | Clip-Tree (W/Tie) |

# Rear Electrical Component Assembly

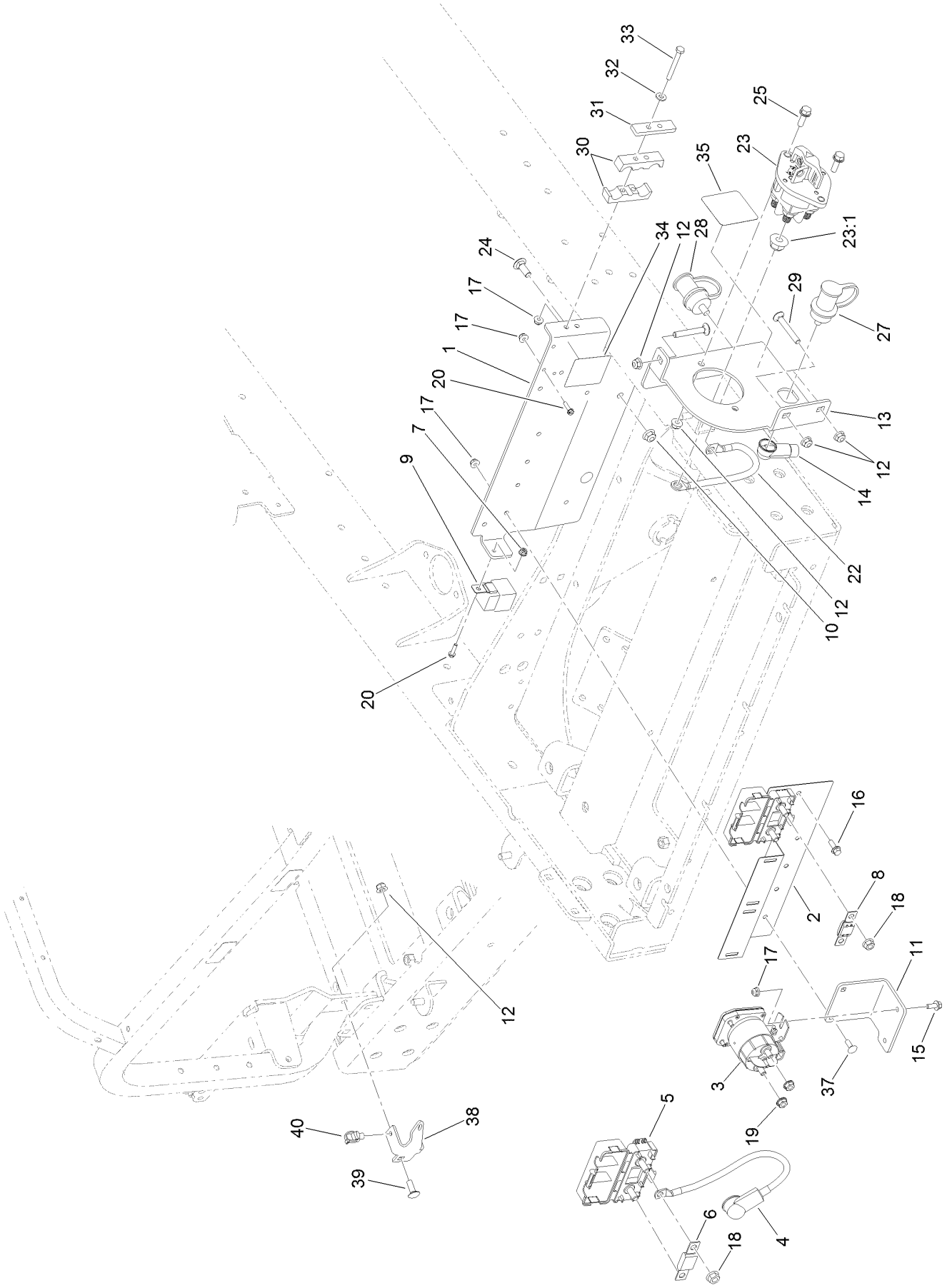

# Rear Electrical Component Assembly (continued)

| Ref. | Part Number | Qty. | Description |
|---|---|---|---|
| 1 | 122-0518-0P | 1 | Bracket-Electrical |
| 2 | 122-0624-0P | 1 | Bracket-Fuse |
| 3 | 139-0997 | 1 | Contactor-12V |
| 4 | 122-1546 | 1 | Cable-Battery, Positive |
| 5 | 114-3318 | 2 | Holder-Fuse, Mega |
| 6 | AU126232 | 1 | Fuse-100A |
| 7 | 120-4578 | 1 | Nut-HF |
| 8 | 122-0628 | 1 | Fuse-Mega |
| 9 | 99-7430 | 1 | Relay-Mini |
| 10 | 104-8301 | 2 | Nut-HF, NI |
| 11 | 139-0995-0P | 1 | Mount-Contactor |
| 12 | 104-8300 | 7 | Nut-HF, NI |
| 13 | 139-1016-0P | 1 | Mount-Disconnect |
| 14 | 32180-009 | 1 | Insulator-Lug, Red |
| 15 | 99-6810 | 2 | Screw-HHF |
| 16 | 3234-4 | 2 | Screw-HHF |
| 17 | 104-7201 | 8 | Nut-HF, NI |
| 18 | 127-2371 | 4 | Nut-HF |
| 19 | 107-0380 | 2 | Nut-HF |

| Ref. | Part Number | Qty. | Description |
|---|---|---|---|
| 20 | 32105-13 | 1 | Screw-HWH |
| 22 | 122-0701 | 1 | Ground Jumper |
| 23 | 122-0603 | 1 | Switch-Disconnect |
| 23:1 | 33006-00 | 1 | Nut-HF |
| 24 | 3231-2 | 2 | Bolt-CARR |
| 25 | 3234-29 | 2 | Screw-HHF |
| 27 | 132-1364 | 1 | Stud-Jumper, Positive |
| 28 | 132-1365 | 1 | Stud-Jumper, Negative |
| 29 | 3230-7 | 3 | Bolt-CARR |
| 30 | 99-3641 | 2 | Clamp-Tube |
| 31 | 114-0989 | 1 | Plate-Cover |
| 32 | 3256-22 | 2 | Washer-Flat |
| 33 | 321-18 | 2 | Screw-HH |
| 34 | 139-1031 | 1 | Decal-Fuse |
| 35 | 132-1313 | 1 | Decal-Disconnect |
| 37 | 3229-1 | 2 | Screw-CARR |
| 38 | 139-1025 | 1 | Retainer-Harness |
| 39 | 3230-10 | 1 | Bolt-CARR |
| 40 | 32180-030 | 1 | Clip-Tie |

# Battery Cable Routing Assembly

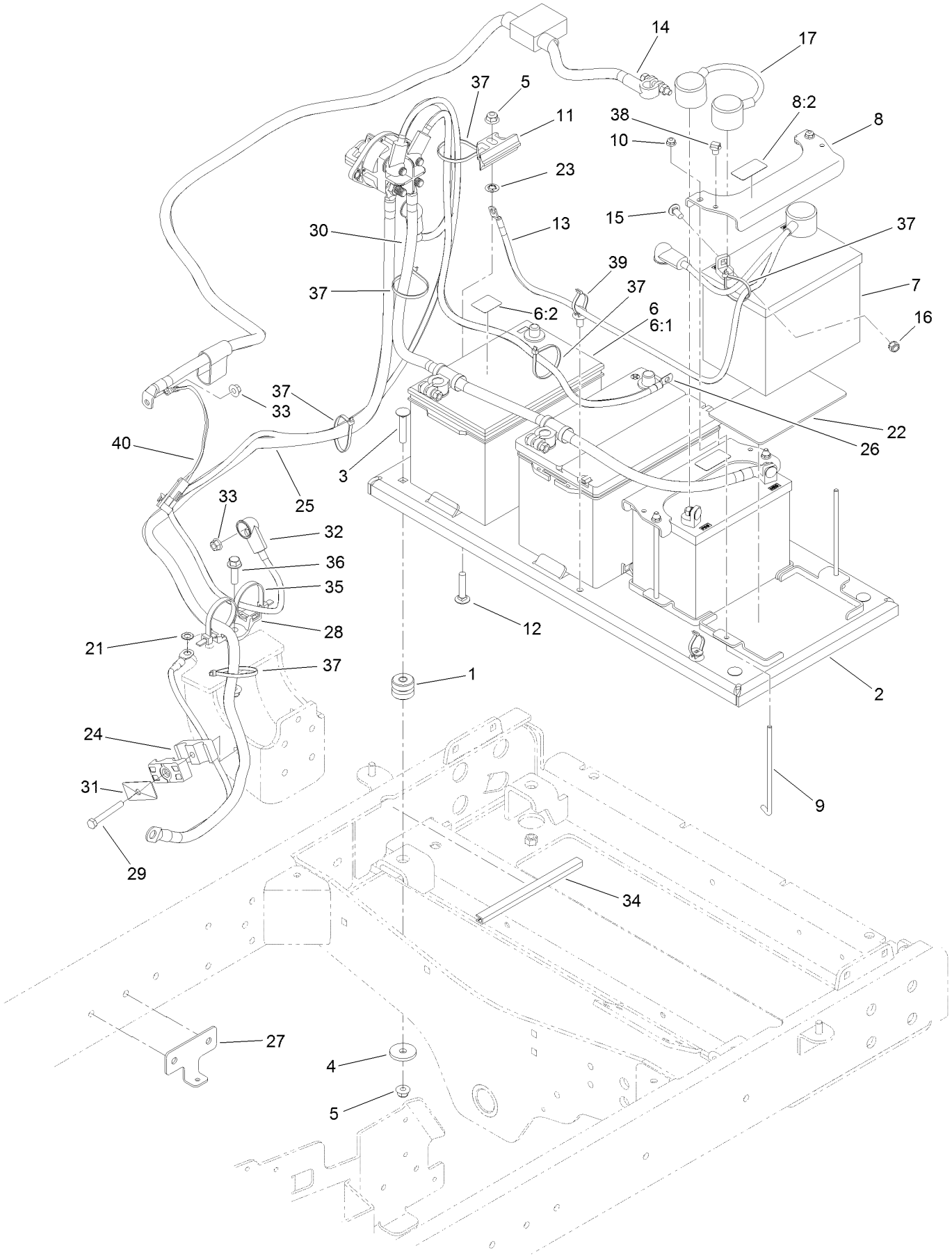

# Battery Cable Routing Assembly (continued)

| Ref. | Part Number | Qty. | Description |
|---|---|---|---|
| 1 | 130-9077 | 4 | Mount-ISO |
| 2 | 130-9084-0P | 1 | Tray-Battery |
| 3 | 3231-6 | 4 | Screw-CARR |
| 4 | 114-2120 | 4 | Washer |
| 5 | 104-8301 | 7 | Nut-HF, NI |
| 6 | 139-1005 | 1 | Battery Kit |
| 6:1 | 127-7507 | 1 | Battery |
| 6:2 | 139-1006 | 1 | Decal |
| 7 | 104-8162 | 1 | Battery |
| 8 | 132-1388 | 2 | Bracket-Battery |
| 8:2 | 132-1318 | 1 | Decal-24 Volt |
| 9 | 104-8567 | 4 | Holdown-Battery |
| 10 | 104-7201 | 4 | Nut-HF, NI |
| 11 | 138-6335 | 2 | Retainer-Battery |
| 12 | 3231-5 | 2 | Screw-CARR |
| 13 | 122-0401 | 1 | Cable-Battery, Positive |
| 14 | 122-1146 | 1 | Cable-Battery, Positive ASM |
| 15 | 3230-23 | 4 | Bolt-CARR |
| 16 | 32149-1 | 4 | Nut-Keps |
| 17 | 122-0402 | 1 | Cable-Battery, Jumper (24V) |

| Ref. | Part Number | Qty. | Description |
|---|---|---|---|
| 21 | 3255-9 | 1 | Washer-Lock |
| 22 | 62-4300 | 2 | Pad-Skid, Anti |
| 23 | 107-3154 | 2 | Nut-Push |
| 24 | 94-8105 | 2 | Clamp-Tube |
| 25 | 122-0404 | 1 | Cable-Battery, Negative |
| 26 | 122-0329 | 1 | Cable-Battery |
| 27 | 122-0604-03 | 1 | Bracket-Battery Cable |
| 28 | 32180-187 | 1 | Clip-Double Tie Mount |
| 29 | 322-12 | 1 | Screw-HH |
| 30 | 122-0617 | 1 | Cable-Battery, Negative |
| 31 | 69-9761 | 1 | Plate-Cover |
| 32 | 122-0331 | 1 | Cable-Battery |
| 33 | 33004-00 | 2 | Nut-HF |
| 34 | 133-8571 | 1 | Trim-Seal |
| 35 | 3334-945 | 2 | Tie-Cable |
| 36 | 119-4061 | 1 | Screw-HHF |
| 37 | 3290-378 | 6 | Tie-Cable |
| 38 | 32180-030 | 1 | Clip-Tie |
| 39 | 32180-031 | 2 | Clip-Tree (W/Tie) |
| 40 | 108-9470 | 1 | Harness-Wire, Fusible Link |

# Wire Harness Assembly

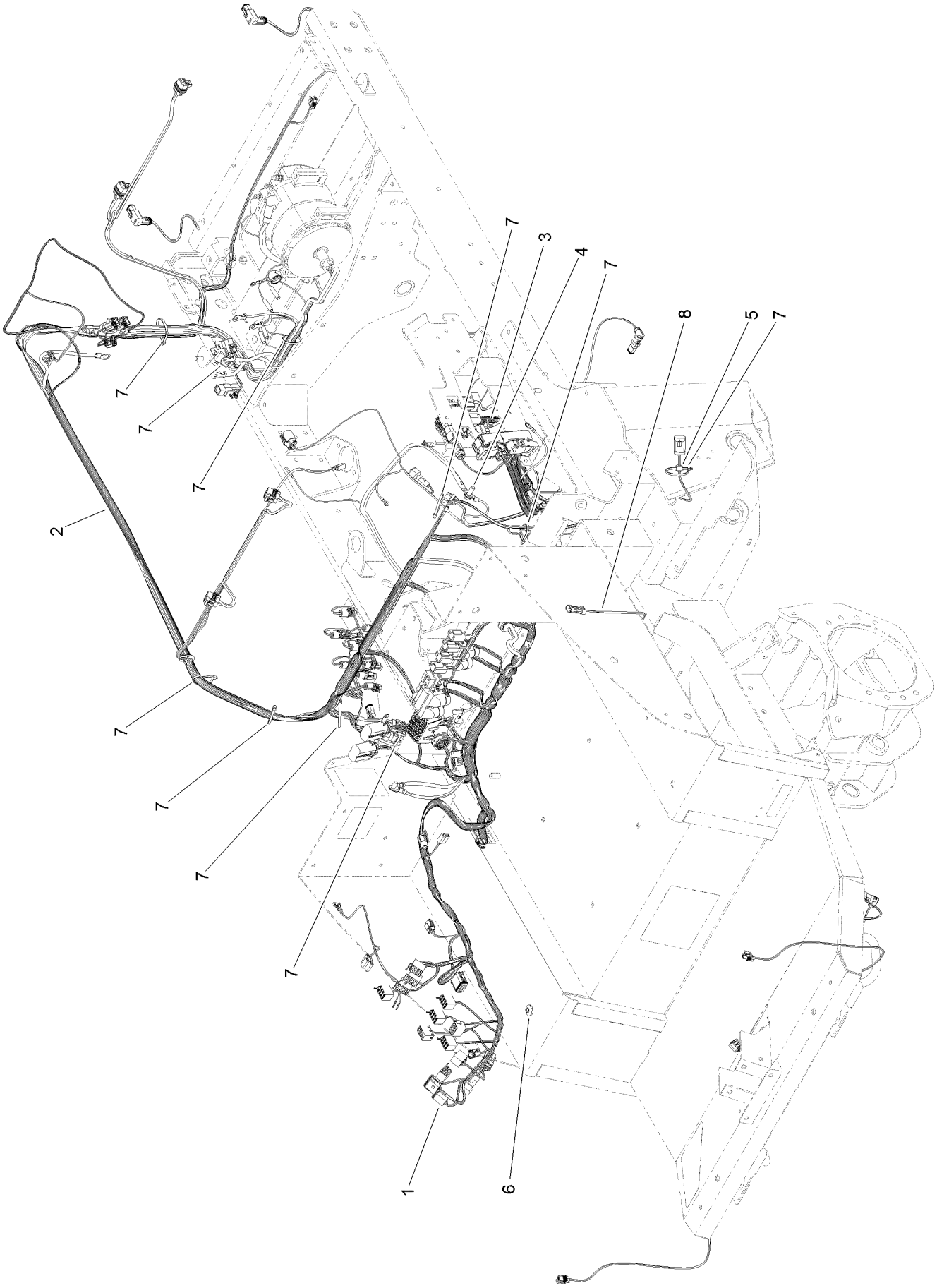

# Wire Harness Assembly (continued)

| Ref. | Part Number | Qty. | Description |
|---|---|---|---|
| 1 | 122-1640 | 1 | Harness-Wire, Platform |
| 2 | 122-1639 | 1 | Harness-Wire, Rear |
| 3 | 122-1556 | 1 | Harness-Wire, Engine |
| 4 | 33105-025 | 1 | Screw-HHF |
| 5 | 32180-030 | 2 | Clip-Tie |
| 6 | 32180-149 | 1 | Tie-Button Head |
| 7 | 3290-378 | 12 | Tie-Cable |
| 8 | 122-1561 | 1 | Harness-Wire, Fuel Level Jumper |

# Platform Wire Harness Assembly No. 122-1640

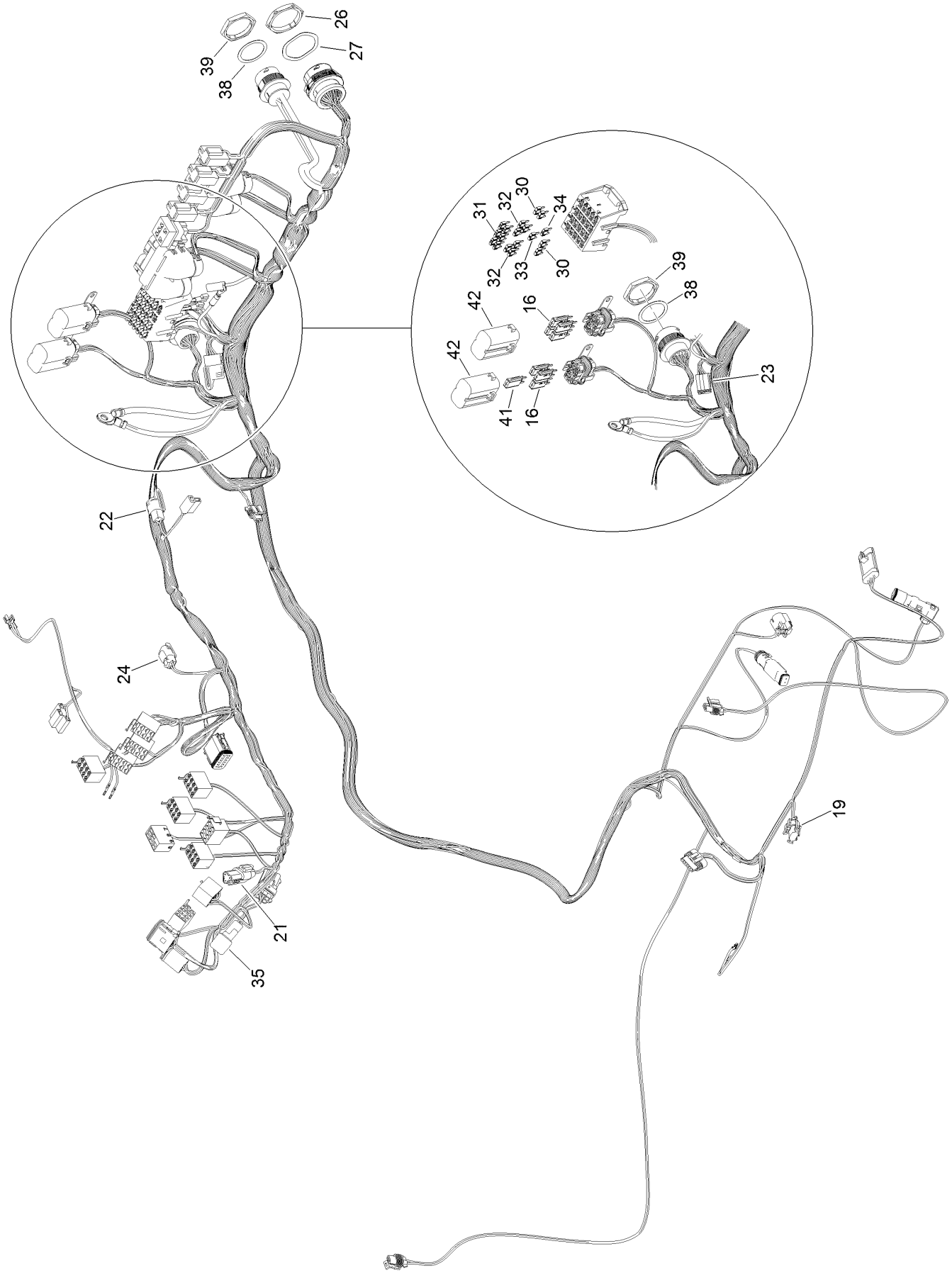

# Platform Wire Harness Assembly No. 122-1640 (continued)

| Ref. | Part Number | Qty. | Description |
|---|---|---|---|
| 16 | 32180-167 | 6 | Diode-Mini Fuse, 6A |
| 19 | 32180-056 | 1 | Cap |
| 21 | 32180-043 | 1 | Resistor-120 Ohm |
| 22 | 32180-089 | 1 | Cap-Plug, 3 Way |
| 23 | 32180-156 | 1 | Cap-Plug, 6 Way |
| 24 | 32180-091 | 1 | Cap-Dust, 2 Way |
| 26 | 32180-135 | 1 | Nut-Connector |
| 27 | 32180-143 | 1 | Washer-Lock |
| 30 | 121-8861 | 4 | Fuse-Mini Blade, 2 Amp |
| 31 | 121-8865 | 6 | Fuse-Mini Blade, 7.5 Amp |
| 32 | 121-8866 | 6 | Fuse-Mini Blade, 10 Amp |
| 33 | 121-8867 | 1 | Fuse-Mini Blade, 15 Amp |
| 34 | 121-8870 | 1 | Fuse-Mini Blade, 30 Amp |
| 35 | 104-4022 | 1 | Resistor-75 Ohm |
| 38 | 32180-174 | 2 | Washer-Lock |
| 39 | 32180-175 | 2 | Nut-Connector |
| 41 | 32180-190 | 1 | Resistor-2K Ohm |
| 42 | 32180-191 | 2 | Cover |

# Rear Wire Harness Assembly No. 122-1639

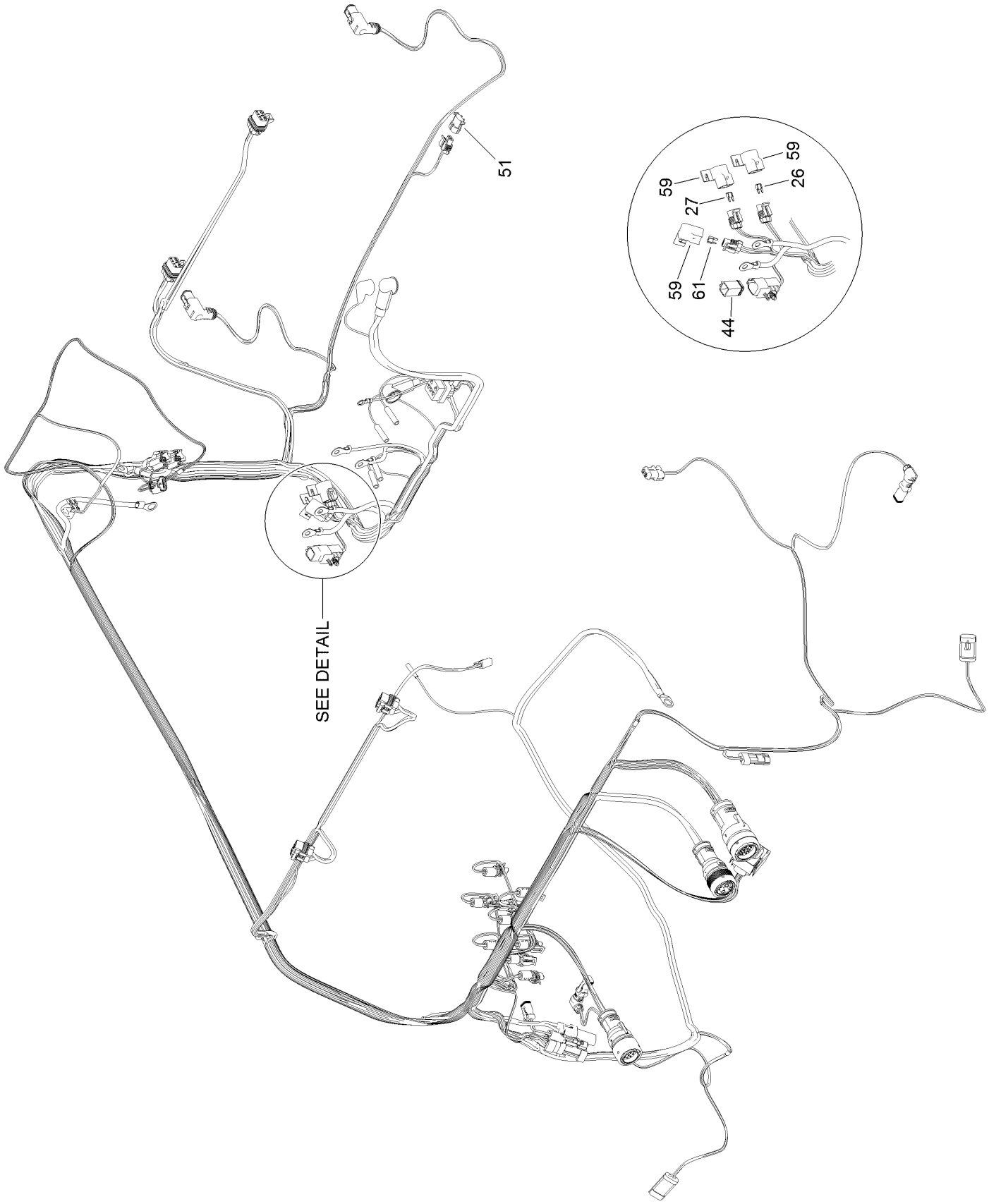

# Rear Wire Harness Assembly No. 122-1639 (continued)

| Ref. | Part Number | Qty. | Description |
|---|---|---|---|
| 26 | 121-8864 | 1 | Fuse-Mini Blade, 5 Amp |
| 27 | 121-8869 | 1 | Fuse-Mini Blade, 25 Amp |
| 44 | 122-0392 | 1 | Voltage Divider-Sealed |
| 51 | 32180-056 | 1 | Cap |
| 59 | 32180-101 | 3 | Cover-Fuse, Single |
| 61 | 121-8866 | 1 | Fuse-Mini Blade, 10 Amp |

# Engine Wire Harness Assembly No. 122-1556

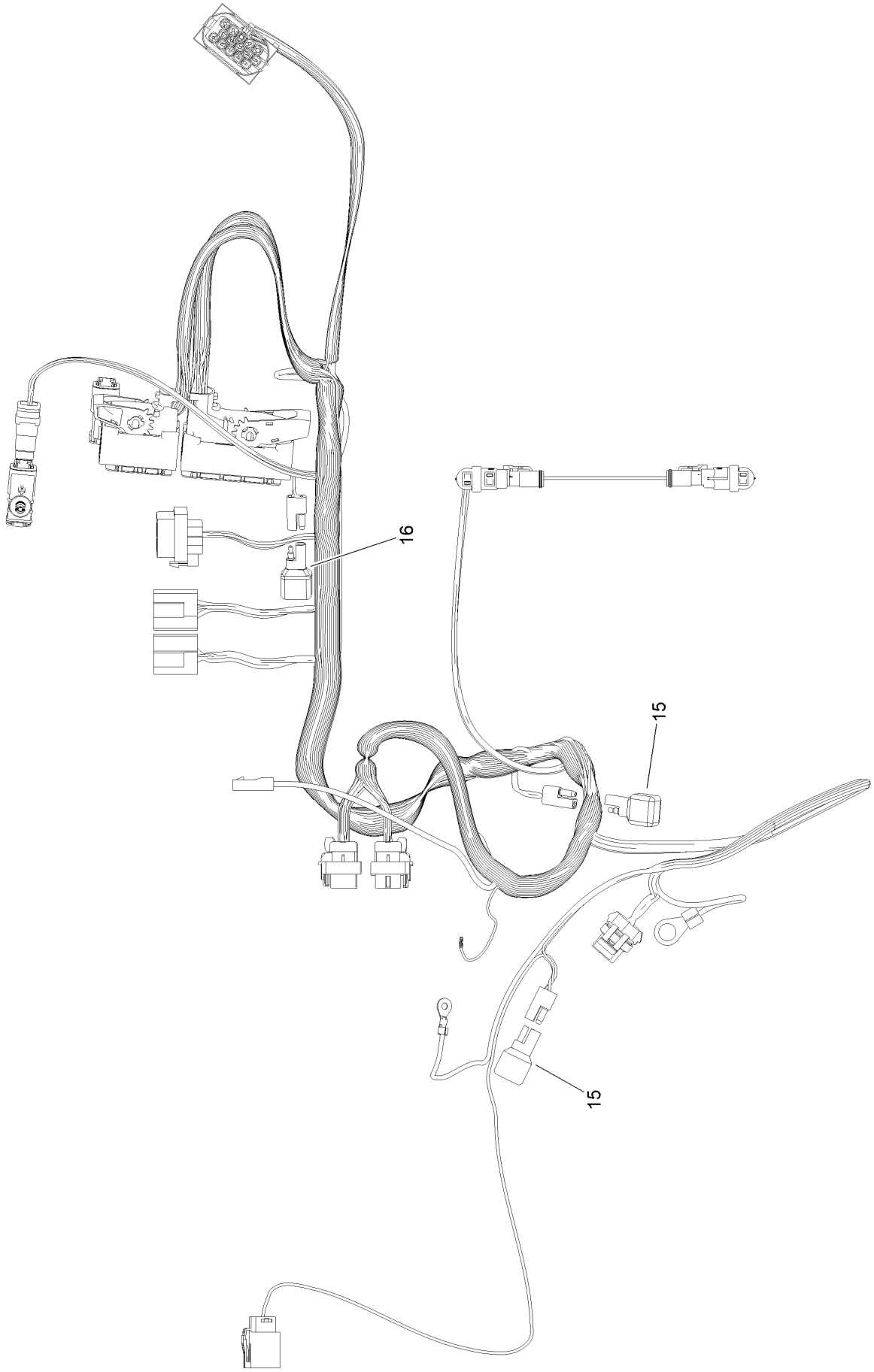

# Engine Wire Harness Assembly No. 122-1556 (continued)

| Ref. | Part Number | Qty. | Description |
|---|---|---|---|
| 15 | 100-4918 | 2 | Diode |
| 16 | 121-8891 | 1 | Resistor (1.6K Ohm) |

# Cab Mounting Assembly

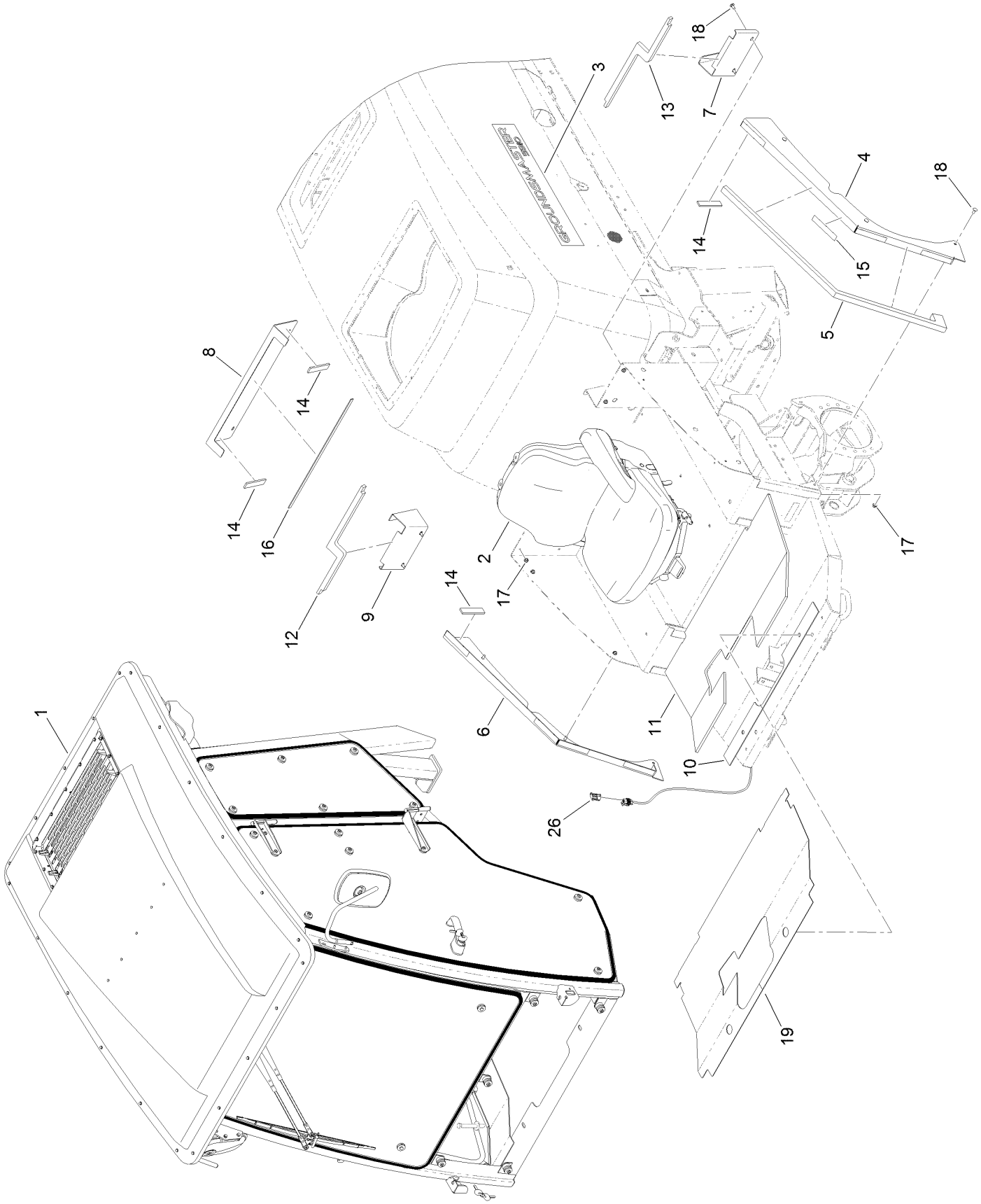

# Cab Mounting Assembly (continued)

| Ref. | Part Number | Qty. | Description |
|---|---|---|---|
| 1 | | 1 | Cab ASM ● |
| 2 | 117-9429 | 1 | Matrix Cloth Seat ASM |
| 3 | 115-5448 | 2 | Decal-Hood |
| 4 | 132-3297-03 | 1 | Panel-Transition, LH |
| 5 | 132-3293 | 2 | Foam-Seal, Side Panel |
| 6 | 132-3296-03 | 1 | Panel-Transition, RH |
| 7 | 132-3299-03 | 1 | Panel-Rear, LH |
| 8 | 132-3294-03 | 1 | Panel-Rear, Center |
| 9 | 132-3298-03 | 1 | Panel-Rear, RH |
| 10 | 130-5605 | 1 | Gasket-Front |
| 11 | 130-5983 | 1 | Foam-Floor |
| 12 | 130-0534 | 1 | Foam-Seal, Rear RH |
| 13 | 130-0535 | 1 | Foam-Seal, Rear LH |
| 14 | 115-5465 | 4 | Seal-Trim |
| 15 | 130-6112 | 8 | Tape-Double Stick |
| 16 | 130-5724 | 1 | Seal-Trim |
| 17 | 104-8300 | 10 | Nut-HF, NI |
| 18 | 3230-23 | 10 | Bolt-CARR |
| 19 | 130-5984 | 1 | Tread-Floor |
| 26 | 32180-056 | 2 | Cap |

● Not serviced separately

# Cloth Premium Seat Assembly No. 117-9429

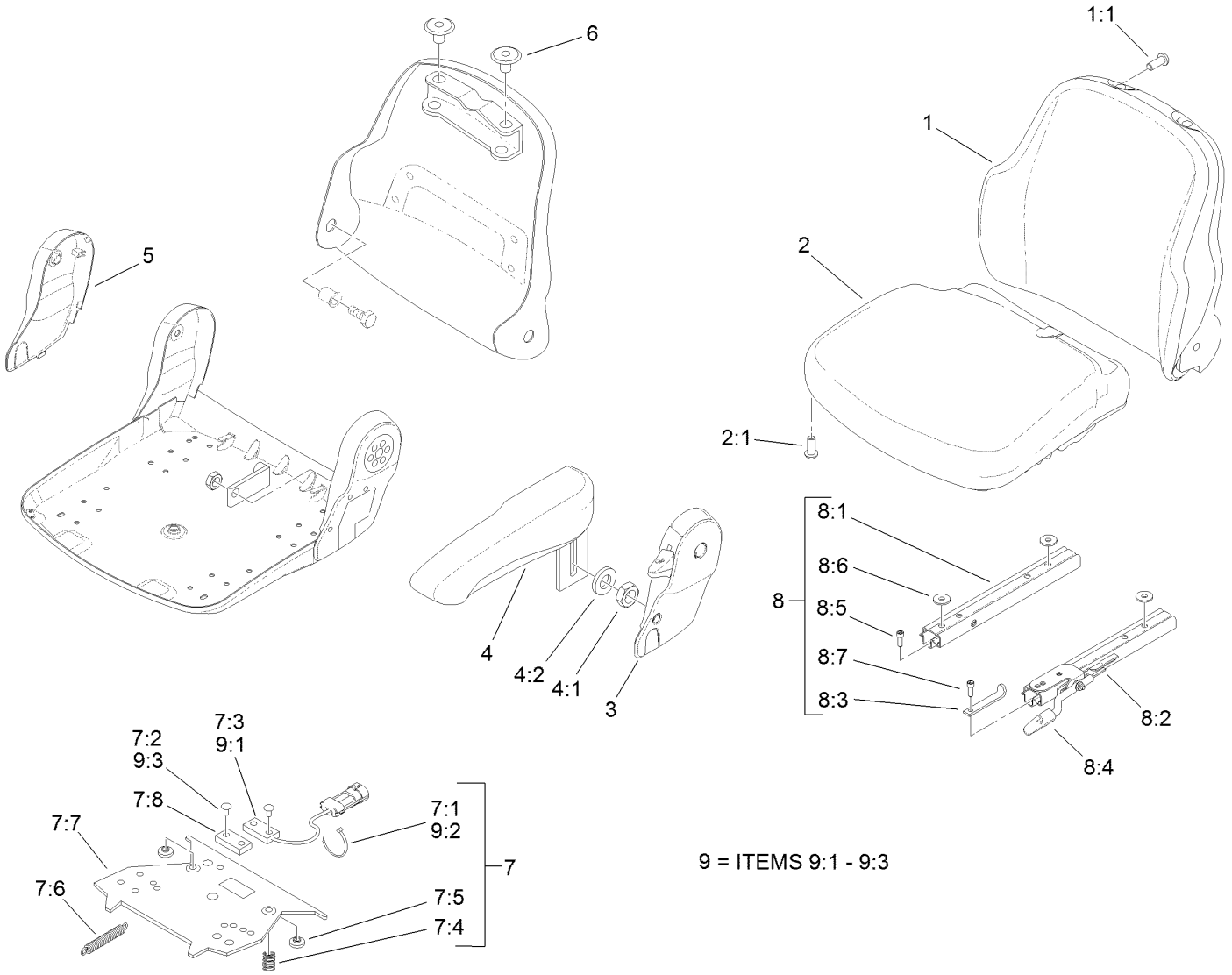

# Cloth Premium Seat Assembly No. 117-9429 (continued)

| Ref. | Part Number | Qty. | Description |
|---|---|---|---|
| 1 | 117-9415 | 1 | Backrest Cushion ASM Matrix Cloth |
| 1:1 | 119-7742 | 4 | Screw-Cushion |
| 2 | 117-9416 | 1 | Seat Cushion ASM Matrix Cloth |
| 2:1 | 119-7742 | 3 | Screw-Cushion |
| 3 | 108-8018 | 1 | Cover-Armrest |
| 4 | 108-8019 | 1 | LH Armrest ASM |
| 4:1 | 82-9650 | 1 | Nut |
| 4:2 | 107-1198 | 1 | Washer |
| 5 | 108-8021 | 1 | Cover-Armrest |
| 6 | 108-8022 | 2 | Cover-Black |
| 7 | 108-8024 | 1 | Switch Kit |
| 7:1 | | 3 | Wire Tie ● |
| 7:2 | | 4 | Rivet ● |
| 7:3 | | 1 | Sensor-Seat Switch ● |
| 7:4 | | 2 | Spring-Compression ● |
| 7:5 | | 2 | Bumper-Pressure Plate ● |
| 7:6 | | 1 | Spring-Extension ● |
| 7:7 | | 1 | Plate-Mounting ● |
| 7:8 | | 1 | Magnet ● |
| 8 | 108-8025 | 1 | Adjustment Rail Set |
| 8:1 | | 1 | Rail-Adjustment, RH ● |
| 8:2 | | 1 | Rail-Adjustment, LH ● |
| 8:3 | | 1 | Stop-Rail ● |
| 8:4 | | 1 | Handle ● |
| 8:5 | | 3 | Screw ● |
| 8:6 | | 3 | Washer ● |
| 8:7 | | 1 | Screw ● |
| 9 | 110-6189 | 1 | Switch Kit |
| 9:1 | | 1 | Switch ● |
| 9:2 | | 3 | Wire Tie ● |
| 9:3 | | 2 | Rivet ● |

● Not serviced separately

# A/C Compressor Mount and Cab Fluids Assembly

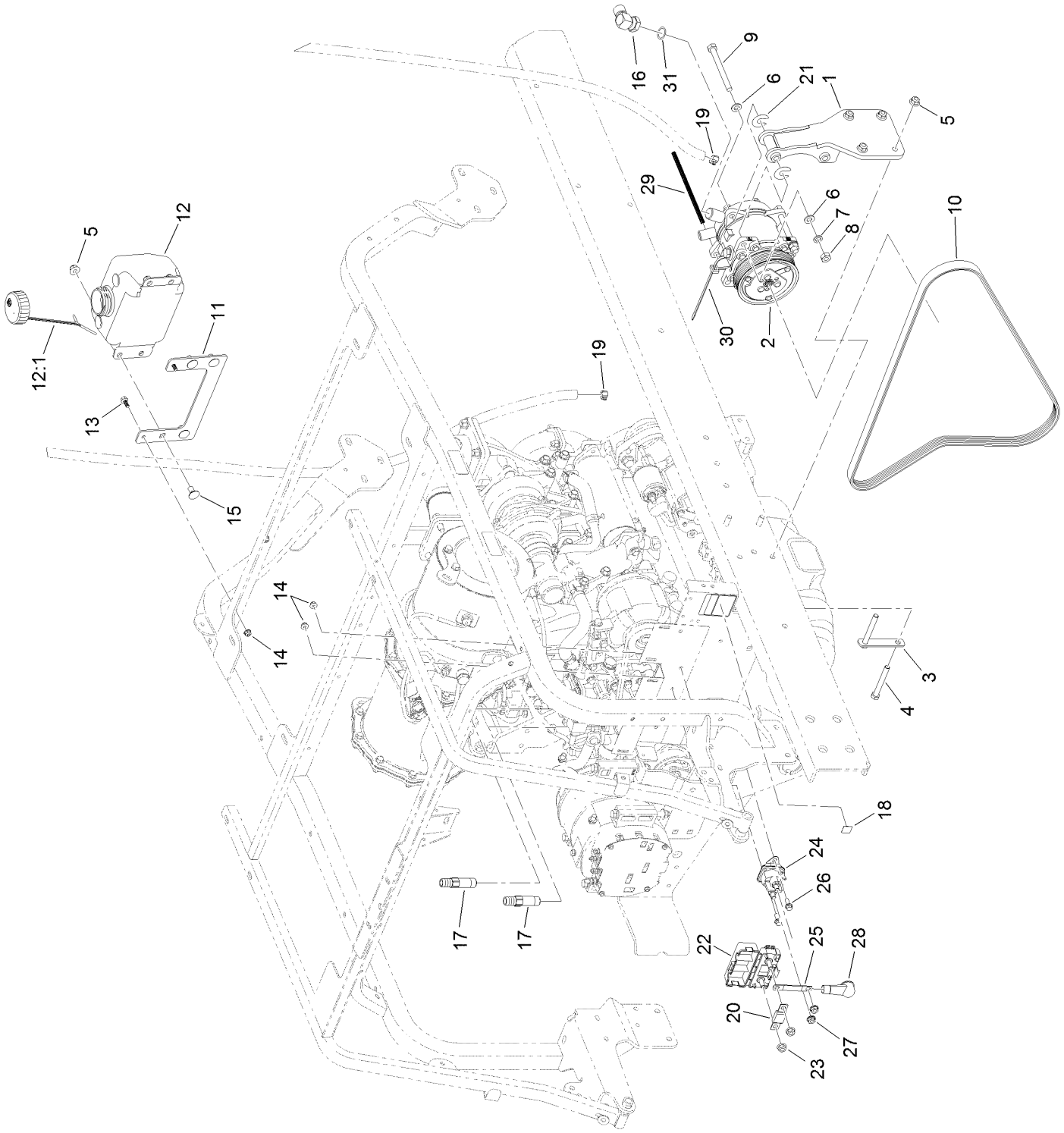

# A/C Compressor Mount and Cab Fluids Assembly (continued)

| Ref. | Part Number | Qty. | Description |
|---|---|---|---|
| 1 | 130-2482-03 | 1 | Mount-Compressor |
| 2 | 130-2487 | 1 | Compressor |
| 3 | 130-2483-03 | 2 | Compressor-Mount, Strap |
| 4 | 323-14 | 4 | Screw-HH |
| 5 | 104-8301 | 8 | Nut-HF, NI |
| 6 | 33095-00 | 4 | Washer-Flat |
| 7 | 48-9590 | 2 | Washer-Lock |
| 8 | 33015-00 | 2 | Nut-Hex |
| 9 | 33115-110 | 2 | Screw-HH |
| 10 | 130-9166 | 1 | Belt-Poly V |
| 11 | 130-5625-03 | 1 | Bracket-Tank, Wiper Fluid |
| 12 | 138-2702 | 1 | Tank-Fluid, Washer |
| 12:1 | 125-5258 | 1 | Lid-Tank, Washer Fluid |
| 13 | 99-6810 | 2 | Screw-HHF |
| 14 | 104-7201 | 4 | Nut-HF, NI |
| 15 | 3231-1 | 4 | Screw-CARR |
| 16 | 119-0128 | 1 | Fitting-Elbow, 90 DEG |
| 17 | 139-2236 | 2 | Fitting-STR Spcl |
| 18 | 137-5499 | 1 | Decal-Radio Memory |
| 19 | 2412-108 | 2 | Clamp-Worm |
| 20 | 122-0628 | 1 | Fuse-Mega |
| 21 | 119-7734 | 4 | Shim |
| 22 | 114-3318 | 1 | Holder-Fuse, Mega |
| 23 | 127-2371 | 2 | Nut-HF |
| 24 | 131-8342 | 1 | Solenoid |
| 25 | 114-5682 | 1 | Strap-Jumper |
| 26 | 3234-4 | 2 | Screw-HHF |
| 27 | 107-0380 | 2 | Nut-HF |
| 28 | 32180-008 | 1 | Insulator-Lug, Red |
| 29 | 115-8882 | 1 | Conduit-Convoluted |
| 30 | 3290-378 | 1 | Tie-Cable |
| 31 | 117-2780 | 1 | O-Ring |

# Cab Frame, Mirror and Decal Assembly

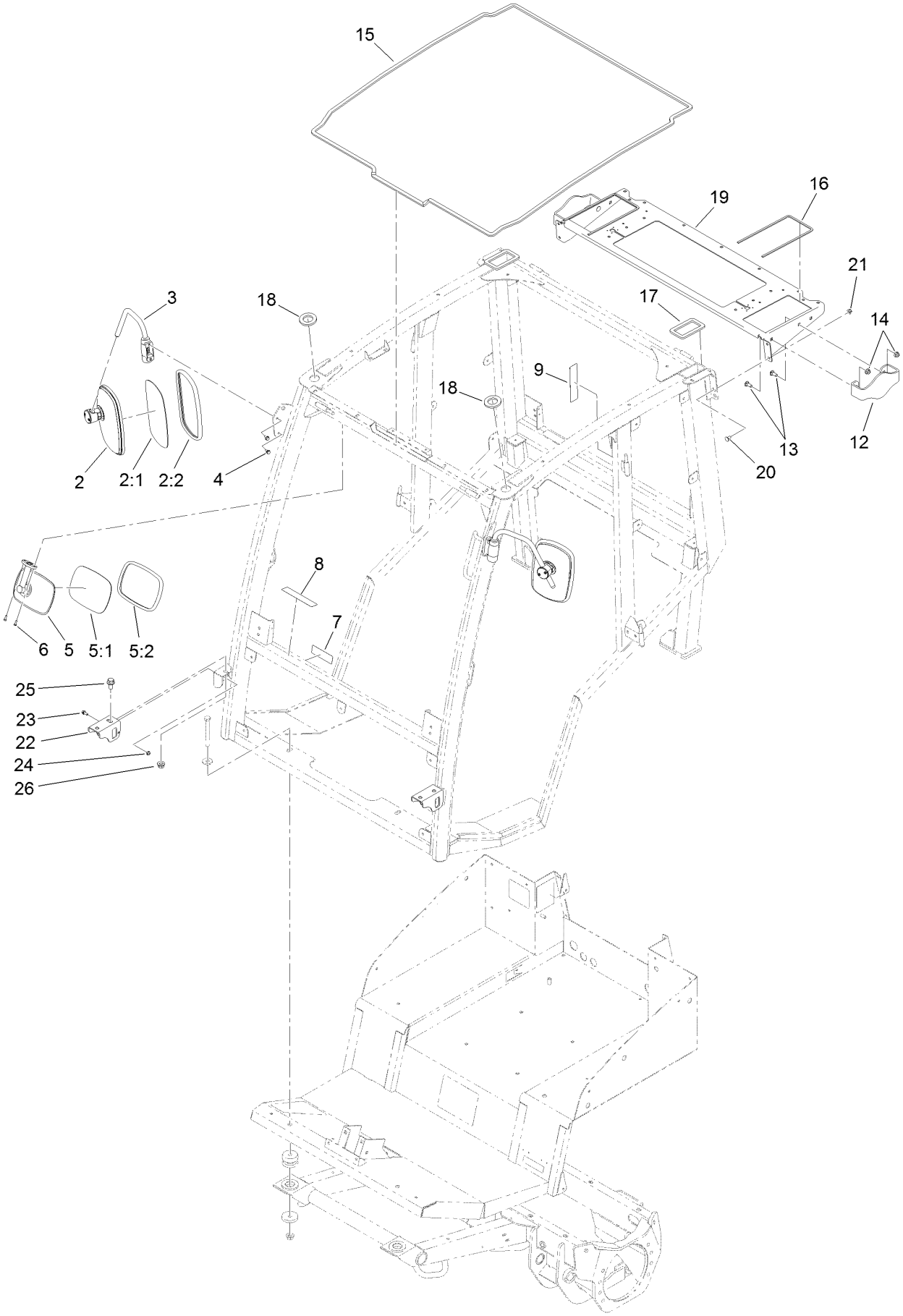

# Cab Frame, Mirror and Decal Assembly (continued)

| Ref. | Part Number | Qty. | Description |
|---|---|---|---|
| 2 | 121-8341 | 2 | Side Mirror ASM |
| 2:1 | | 1 | Mirror-Glass ● |
| 2:2 | | 1 | Gasket ● |
| 3 | 121-8275 | 2 | Arm-Mirror, Side |
| 4 | 33103-016 | 4 | Screw-HHF |
| 5 | 121-8343 | 1 | Interior Mirror ASM |
| 5:1 | | 1 | Mirror ● |
| 5:2 | | 1 | Gasket ● |
| 6 | 32144-32 | 2 | Screw-PPH |
| 7 | 130-5356 | 1 | Decal-Traction Pedal |
| 8 | 130-0611 | 4 | Decal-Window, Pin |
| 9 | 130-0594 | 1 | Decal-Warning |
| 12 | 130-5791-03 | 2 | Deck-Stop |
| 13 | 3231-12 | 4 | Bolt-CARR |
| 14 | 104-8301 | 4 | Nut-HF, NI |
| 15 | 130-0586 | 1 | Seal-Foam, Frame Roof |
| 16 | 130-0587 | 2 | Seal-Foam, Roof Air Filter |
| 17 | 130-5855 | 2 | Seal-Tube, Rear |
| 18 | 133-0982 | 2 | Tube-Seal, Front |
| 19 | 136-1768-03 | 1 | Shelf-Mount, Fan |
| 20 | 3230-18 | 4 | Screw-CARR |
| 21 | 104-8300 | 4 | Nut-HF, NI |
| 22 | 144-3259-03 | 2 | Bracket-Extension, Light |
| 23 | 3234-33 | 2 | Screw-HHF |
| 24 | 104-7201 | 2 | Nut-HF, NI |
| 25 | 3234-6 | 2 | Screw-HHF |
| 26 | 99-5107 | 2 | Nut-Lock |

● Not serviced separately

# Windshield Wiper, Filter and Air Conditioning Assembly

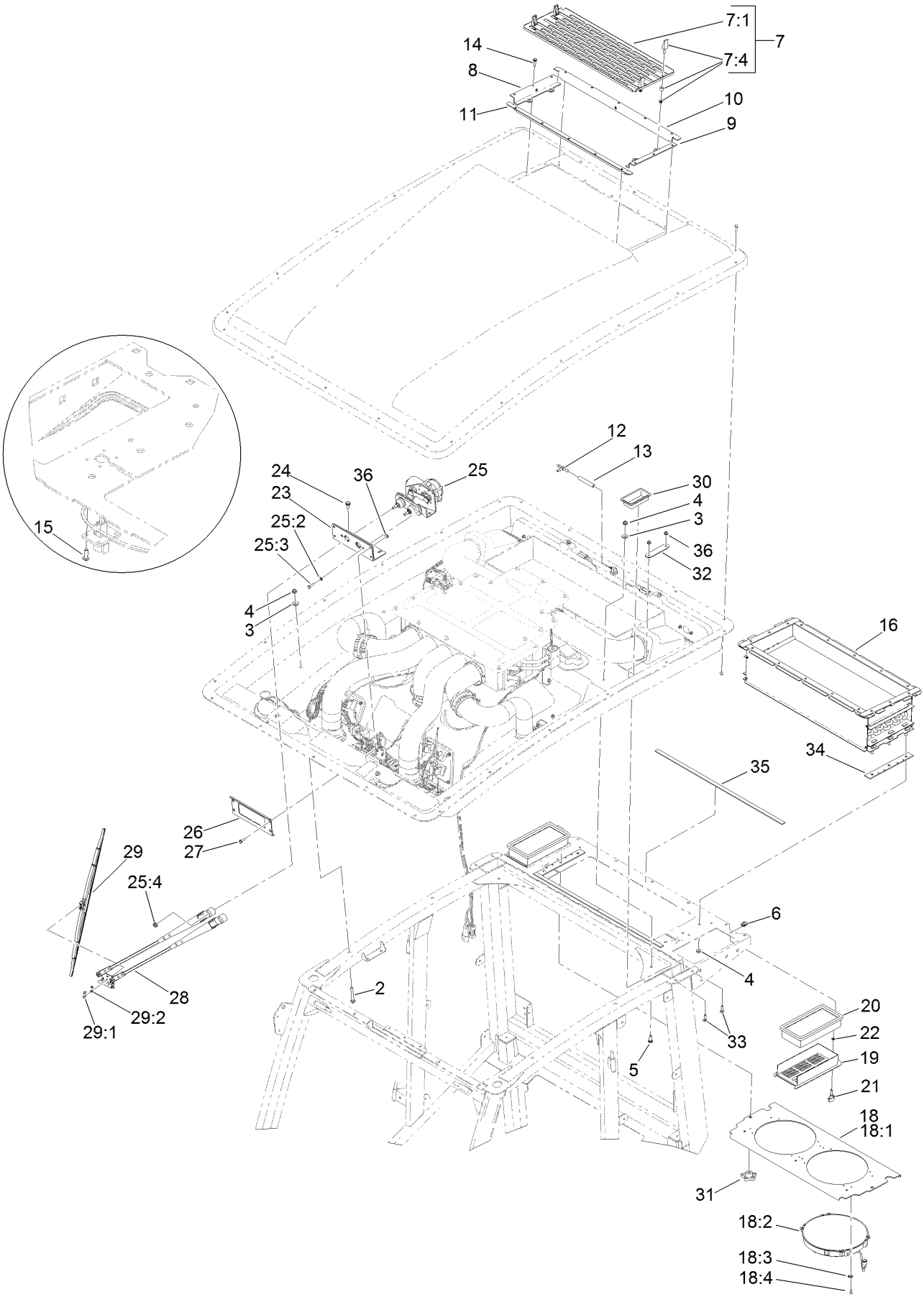

# Windshield Wiper, Filter and Air Conditioning Assembly (continued)

| Ref. | Part Number | Qty. | Description |
|---|---|---|---|
| 2 | 3230-9 | 4 | Screw-CARR |
| 3 | 3256-3 | 17 | Washer-Flat |
| 4 | 104-8300 | 21 | Nut-HF, NI |
| 5 | 3230-22 | 13 | Screw-CARR |
| 6 | 107069 | 2 | Clip |
| 7 | | 1 | Screen ASM ● |
| 7:1 | 132-3530-03 | 1 | Screen |
| 7:4 | 74-5950 | 4 | Latch-Swell |
| 8 | 132-3534-03 | 1 | Seal-Side, Right |
| 9 | 132-3533-03 | 1 | Seal-Side, Left |
| 10 | 132-3532-03 | 1 | Seal-Rear |
| 11 | 132-3531-03 | 1 | Seal-Front |
| 12 | 99-5005 | 1 | Fitting-Tee, Barbed |
| 13 | 114-3765 | 1 | Hose-Fuel |
| 14 | 120-4654 | 16 | Screw-HHF |
| 15 | 363-8245 | 8 | Screw-TAP |
| 16 | 132-3468 | 1 | A/C Duct ASM |
| 18 | 132-3488 | 1 | Panel-Fan |
| 18:1 | 132-3486-03 | 1 | Plate-Mount, Fan |
| 18:2 | 132-3607 | 2 | Fan-Condenser |
| 18:3 | 132-3606 | 8 | Tab-Fan |
| 18:4 | 105-6849 | 8 | Screw-Forming, Thread |
| 19 | 125-9825-03 | 2 | Cover-Air, Fresh |
| 20 | 121-8457 | 2 | Filter-Air |
| 21 | 126-5846 | 2 | Knob-T |
| 22 | 32115-15 | 2 | Nut-Push |
| 23 | 130-5871 | 1 | Bracket-Wiper |
| 24 | 32144-11 | 3 | Screw-HWH |
| 25 | 125-7452 | 1 | Wiper Motor ASM |
| 25:2 | 3253-3 | 1 | Washer-Lock |
| 25:3 | 33113-025 | 1 | Screw-HH |
| 25:4 | 112-2844 | 2 | Nut-HF |
| 26 | 130-6068-03 | 1 | Plate-Washer, Wiper Motor |
| 27 | 32105-15 | 4 | Screw-HWH |
| 28 | 125-7453 | 1 | Arm-Wiper |
| 29 | 125-7454 | 1 | Blade-Wiper |
| 29:1 | 47-2830 | 2 | Screw |
| 29:2 | 43-5920 | 2 | Washer-Lock, Spring |
| 30 | 130-5661 | 2 | Tube-Sleeve |
| 31 | 117-5976 | 2 | Knob-Handle |
| 32 | 130-5854 | 2 | Brace-Seal |
| 33 | 3229-30 | 4 | Screw-CARR |
| 34 | 132-3608 | 2 | Seal-Edge |
| 35 | 132-3609 | 2 | Seal-Strip |
| 36 | 104-7201 | 8 | Nut-HF, NI |

● Not serviced separately

# Air Conditioning Duct Assembly No. 132-3468

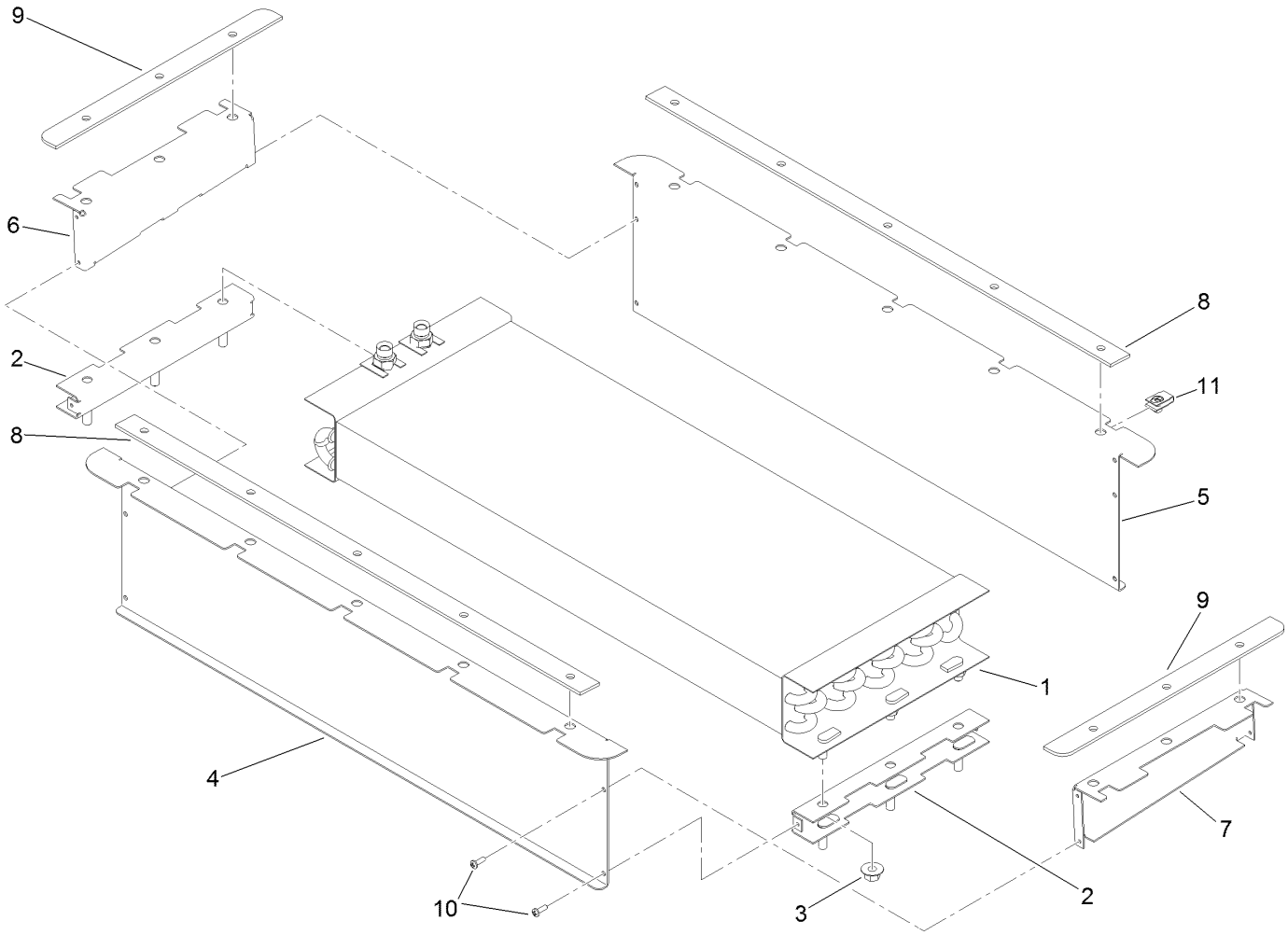

# Air Conditioning Duct Assembly No. 132-3468 (continued)

| Ref. | Part Number | Qty. | Description |
|---|---|---|---|
| 1 | 121-8447 | 1 | Core-Condenser |
| 2 | 132-3469-03 | 2 | Leg-Lower |
| 3 | 32128-44 | 6 | Nut |
| 4 | 132-3462-03 | 1 | Wall-Front |
| 5 | 132-3463-03 | 1 | Wall-Back |
| 6 | 132-3464-03 | 1 | Wall-Side, Right |
| 7 | 132-3465-03 | 1 | Wall-Side, Left |
| 8 | 132-3466 | 2 | Seal-Strip |
| 9 | 132-3467 | 2 | Seal-Edge |
| 10 | 363-8245 | 12 | Screw-TAP |
| 11 | 107069 | 16 | Clip |

# Window and Door Assembly

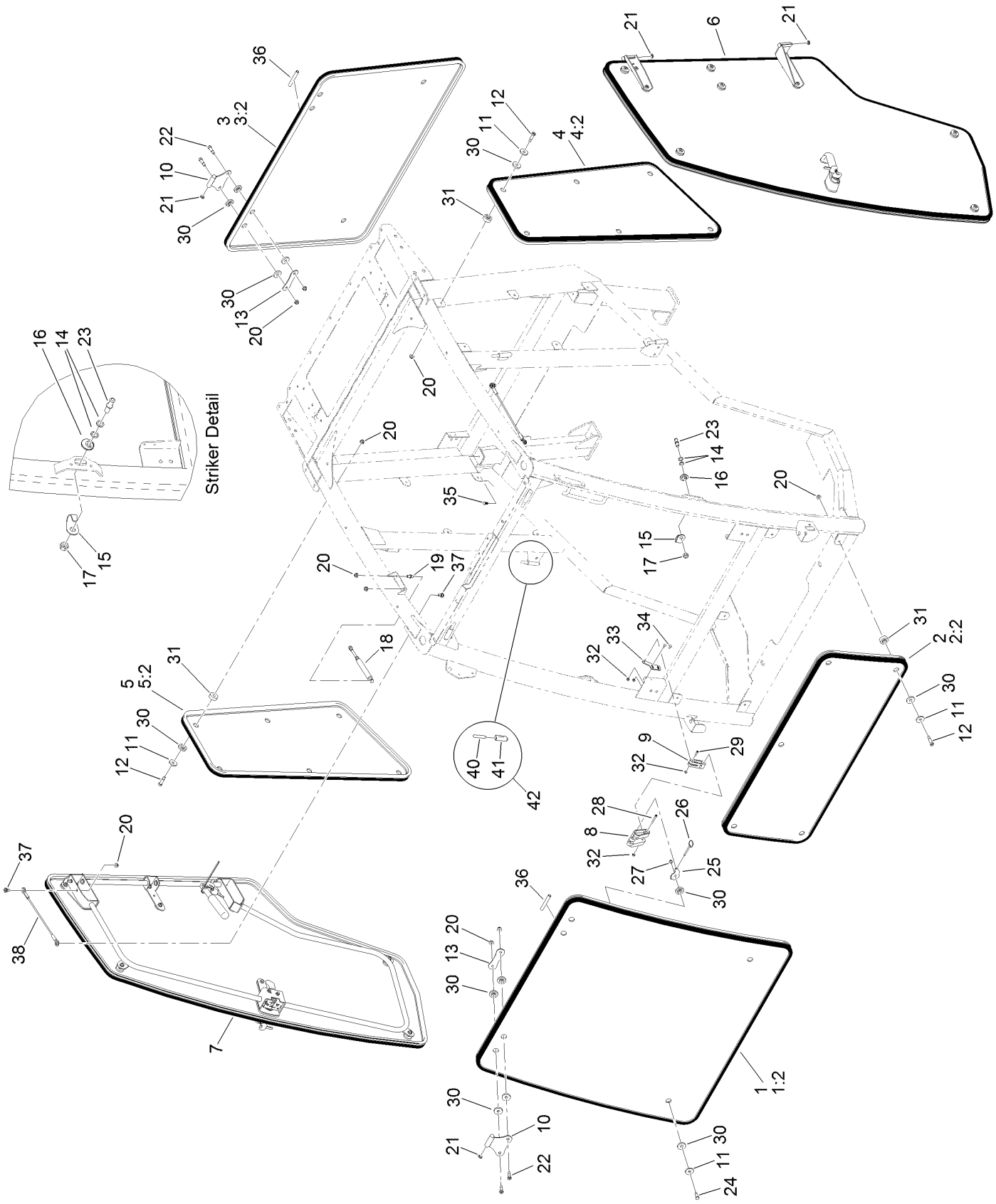

# Window and Door Assembly (continued)

| Ref. | Part Number | Qty. | Description |
|---|---|---|---|
| 1 | 130-5680 | 1 | Upper Front Window ASM |
| 1:2 | 121-8212 | 1 | Seal-Trim |
| 2 | 130-5681 | 1 | Lower Front Window ASM |
| 2:2 | 121-8211 | 1 | Trim-Window, Front |
| 3 | 130-5690 | 1 | Rear Window ASM |
| 3:2 | 121-8213 | 1 | Trim-Window, Rear |
| 4 | 130-6187 | 1 | LH Side Window ASM |
| 4:2 | 130-0502 | 1 | Trim-Window, Stationary |
| 5 | 130-6186 | 1 | RH Side Window ASM |
| 5:2 | 130-0502 | 1 | Trim-Window, Stationary |
| 6 | | 1 | LH Door ASM ● |
| 7 | | 1 | RH Door ASM ● |
| 8 | 125-9792 | 4 | Handle-Window |
| 9 | 125-9793 | 4 | Link-Window |
| 10 | 121-8535-03 | 4 | Hinge-Window |
| 11 | 130-5815 | 21 | Washer-Backup |
| 12 | 125-9521 | 17 | Screw-Shldr HSH |
| 13 | 127-9933 | 4 | Plate-Backer, Windshield |
| 14 | 73-0040 | 4 | Washer-Thrust |
| 15 | 121-8393 | 2 | Guard-Striker |
| 16 | 125-9992 | 2 | Adjuster-Stud |
| 17 | 106-0327 | 2 | Nut-Hex |
| 18 | 130-6083 | 2 | Spring-Gas, Door |
| 19 | 98-3104 | 2 | Stud-Ball |
| 20 | 104-8300 | 31 | Nut-HF, NI |
| 21 | 121-8441 | 8 | Washer-Spacer |
| 22 | 125-9520 | 8 | Screw-Shoulder, HSH |
| 23 | 132-3718 | 2 | Stud-Striker |
| 24 | 119-9812 | 4 | Bolt-Shoulder |
| 25 | 125-9987 | 4 | Mount-Latch |
| 26 | 127-9850 | 4 | Pin-Release, Quick |
| 27 | 104-7201 | 4 | Nut-HF, NI |
| 28 | 3274-59 | 4 | Screw-HSH |
| 29 | 3274-14 | 4 | Screw-HSH |
| 30 | 125-9982 | 41 | Bushing-Flange |
| 31 | 125-9537 | 17 | Bushing-Flange |
| 32 | 120-9681 | 16 | Nut-Lock, NI |
| 33 | 130-0590 | 4 | Mount-Tab |
| 34 | 1-807513 | 8 | Bolt-CARR |
| 35 | 114-4899 | 2 | Rivet-Push |
| 36 | 130-5578 | 2 | Tubing-Seal, Rubber |
| 37 | 120-9471 | 4 | Bolt-Shoulder |
| 38 | 130-5726 | 2 | Lanyard |
| 40 | 133-1110 | 1 | Pin-Hinge |
| 41 | 121-8439 | 1 | Receiver-Pivot, Hinge |
| 42 | 121-8440 | 1 | Pivot-Hinge |

● Not serviced separately

# Left Hand Door Assembly

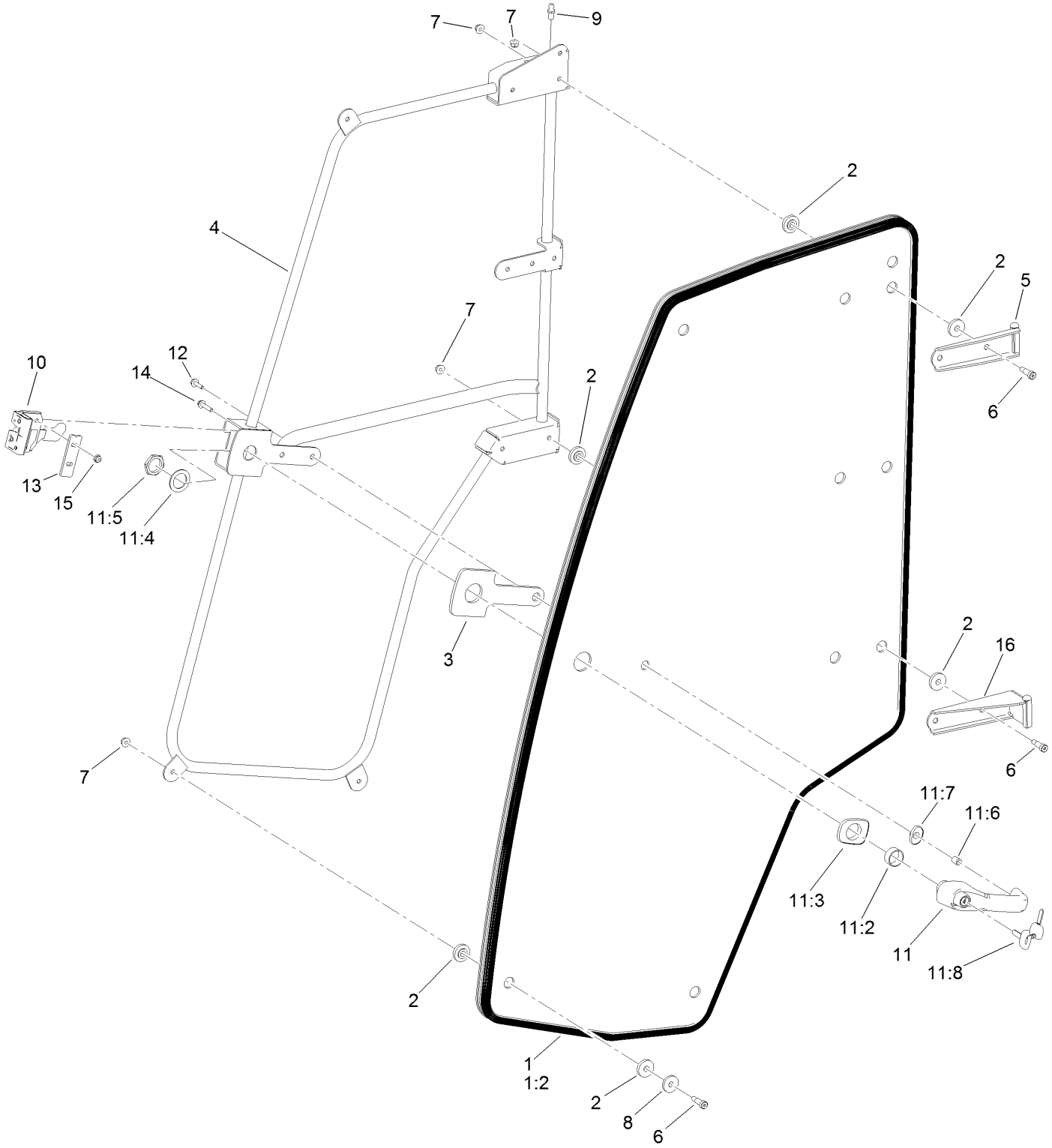

# Left Hand Door Assembly (continued)

| Ref. | Part Number | Qty. | Description |
|---|---|---|---|
| 1 | 130-6185 | 1 | LH Door ASM |
| 1:2 | 121-8317 | 1 | Trim-Window, Door |
| 2 | 125-9982 | 20 | Bushing-Flange |
| 3 | 121-8331 | 1 | Gasket-Handle |
| 4 | 125-7358-03 | 1 | Frame-Door, LH |
| 5 | 130-0525-03 | 1 | Hinge-Door, Top (LH) |
| 6 | 125-9520 | 10 | Screw-Shoulder, HSH |
| 7 | 104-8300 | 11 | Nut-HF, NI |
| 8 | 130-5815 | 6 | Washer-Backup |
| 9 | 98-3104 | 1 | Stud-Ball |
| 10 | 121-8391 | 1 | Latch-LH |
| 11 | 121-8630 | 1 | Handle ASM |

| Ref. | Part Number | Qty. | Description |
|---|---|---|---|
| 11:2 | 121-8628 | 1 | Cylinder-Mounting, Key |
| 11:3 | 121-8322 | 1 | Grommet-Mounting, Large |
| 11:4 | 121-8327 | 1 | Washer |
| 11:5 | 121-8328 | 1 | Nut |
| 11:6 | 121-8627 | 1 | Cylinder-Mounting, End |
| 11:7 | 121-8323 | 1 | Grommet-Mounting, Small |
| 11:8 | 125-9531 | 1 | Key-Set |
| 12 | 33103-025 | 1 | Screw-HHF |
| 13 | 121-8395 | 1 | Plate-Support, Latch |
| 14 | 3234-21 | 2 | Screw-HHF |
| 15 | 104-7201 | 2 | Nut-HF, NI |
| 16 | 130-0526-03 | 1 | Hinge-Door, Bottom (LH) |

# Right Hand Door Assembly

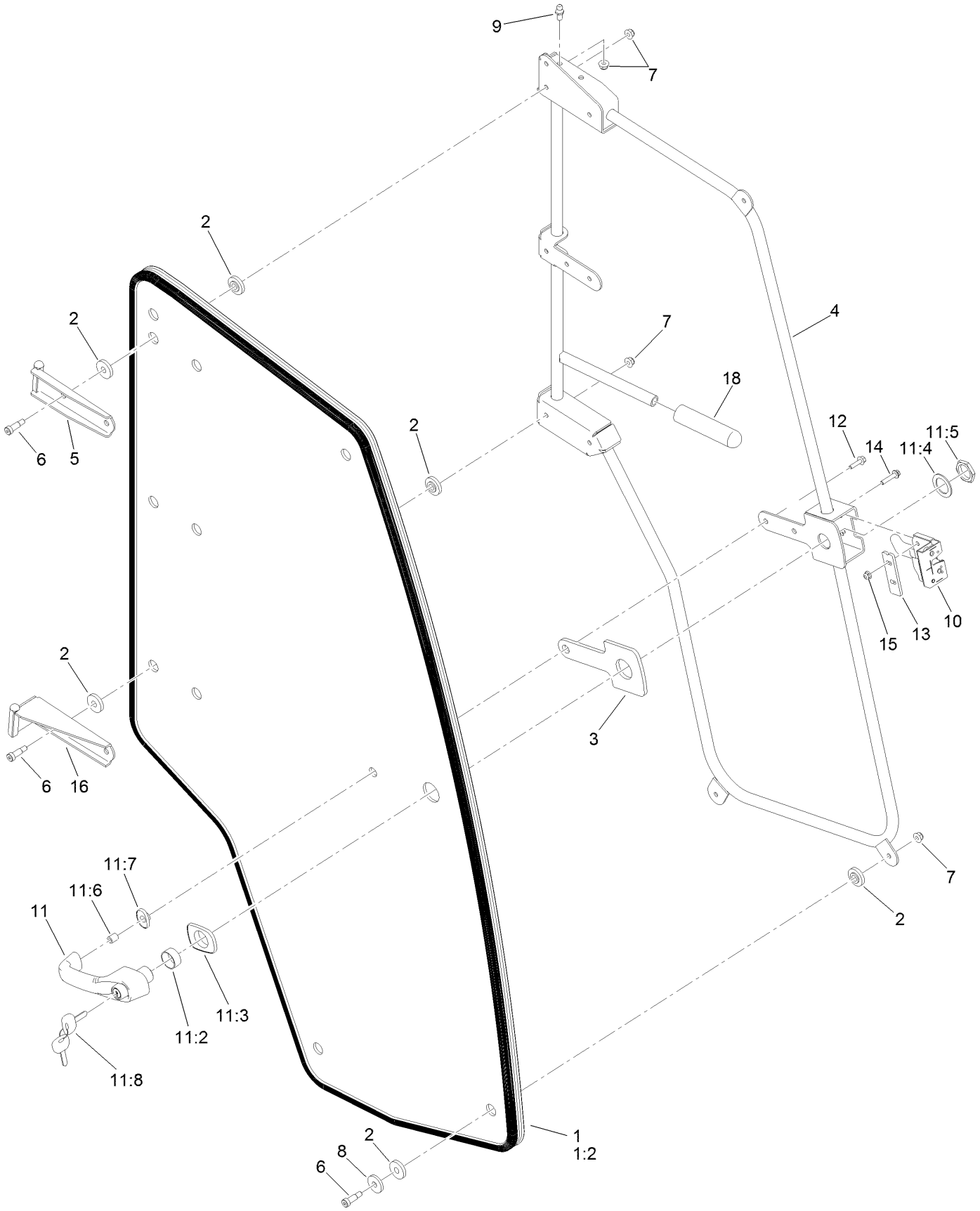

# Right Hand Door Assembly (continued)

| Ref. | Part Number | Qty. | Description |
|---|---|---|---|
| 1 | 130-6184 | 1 | RH Door ASM |
| 1:2 | 121-8317 | 1 | Trim-Window, Door |
| 2 | 125-9982 | 20 | Bushing-Flange |
| 3 | 121-8331 | 1 | Gasket-Handle |
| 4 | 125-7359-03 | 1 | Frame-Door, RH |
| 5 | 130-0529-03 | 1 | Hinge-Door, Top (RH) |
| 6 | 125-9520 | 10 | Screw-Shoulder, HSH |
| 7 | 104-8300 | 11 | Nut-HF, NI |
| 8 | 130-5815 | 6 | Washer-Backup |
| 9 | 98-3104 | 1 | Stud-Ball |
| 10 | 121-8390 | 1 | Latch-RH |
| 11 | 121-8630 | 1 | Handle ASM |
| 11:2 | 121-8628 | 1 | Cylinder-Mounting, Key |
| 11:3 | 121-8322 | 1 | Grommet-Mounting, Large |
| 11:4 | 121-8327 | 1 | Washer |
| 11:5 | 121-8328 | 1 | Nut |
| 11:6 | 121-8627 | 1 | Cylinder-Mounting, End |
| 11:7 | 121-8323 | 1 | Grommet-Mounting, Small |
| 11:8 | 125-9531 | 1 | Key-Set |
| 12 | 33103-025 | 1 | Screw-HHF |
| 13 | 121-8395 | 1 | Plate-Support, Latch |
| 14 | 3234-21 | 2 | Screw-HHF |
| 15 | 104-7201 | 2 | Nut-HF, NI |
| 16 | 130-0530-03 | 1 | Hinge-Door, Bottom (RH) |
| 18 | 110-1037 | 1 | Grip-Handle |

# Left Side Hose Assembly

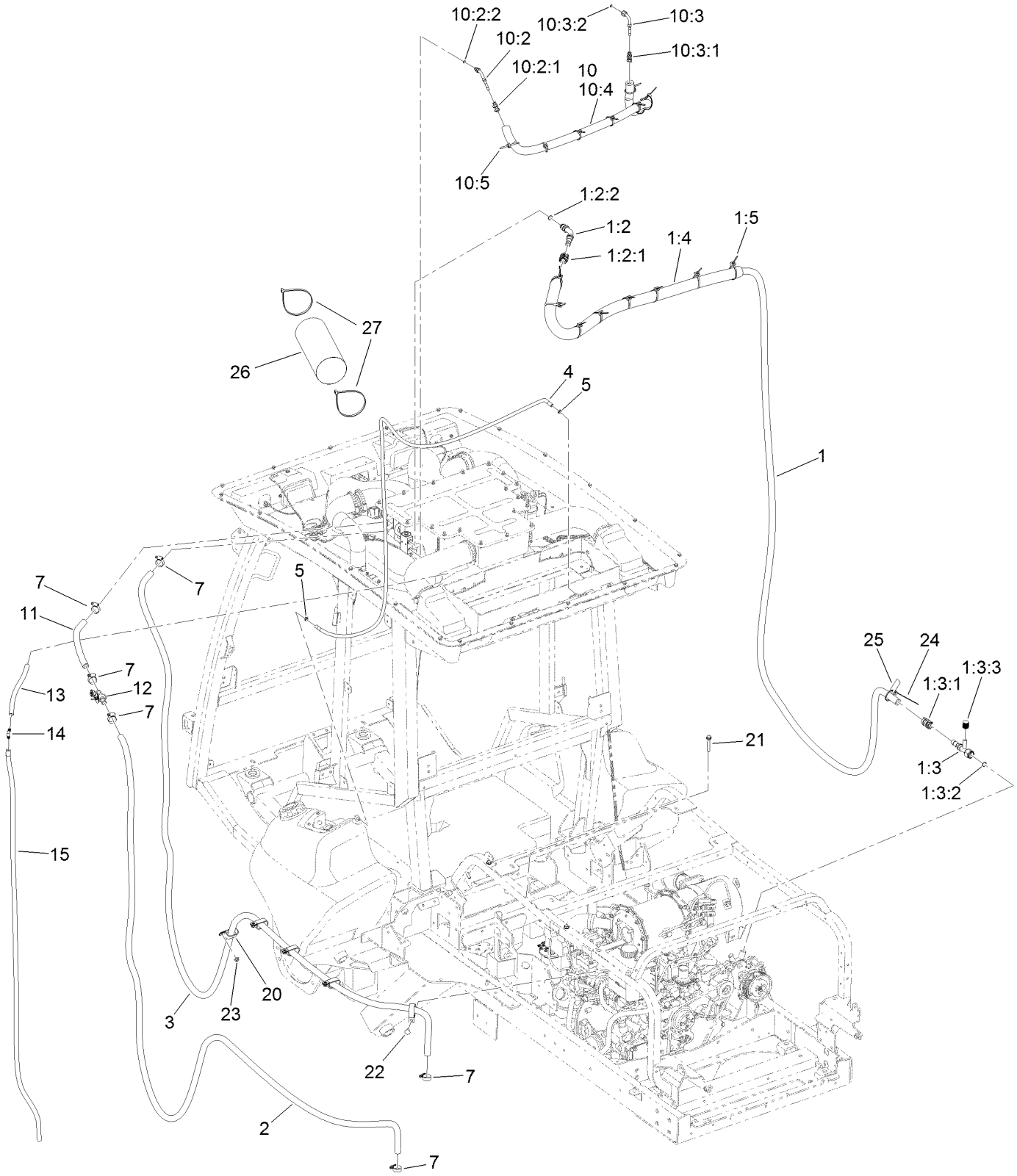

# Left Side Hose Assembly (continued)

| Ref. | Part Number | Qty. | Description |
|---|---|---|---|
| 1 | 130-5620 | 1 | A/C Hose ASM |
| 1:2 | 130-5754 | 1 | Fitting-Male, 45 DEG |
| 1:2:1 | 130-5775 | 1 | Fitting Kit |
| 1:2:2 | 117-2780 | 1 | O-Ring |
| 1:3 | 130-5755 | 1 | Fitting-Female, Straight |
| 1:3:1 | 130-5775 | 1 | Fitting Kit |
| 1:3:2 | 117-2780 | 1 | O-Ring |
| 1:3:3 | 117-2784 | 1 | Cap-Side, Low |
| 1:4 | 130-5959 | 1 | Cover-Foam |
| 1:5 | 3290-378 | 8 | Tie-Cable |
| 2 | 130-5622 | 1 | Hose-Heater |
| 3 | 130-5946 | 1 | Hose-Heater |
| 4 | 130-5813 | 1 | Hose-Fuel |
| 5 | 2412-98 | 2 | Clamp-Hose |
| 7 | 2412-129 | 6 | Clamp-Hose |
| 10 | 125-9702 | 1 | Hose ASM |
| 10:2 | 130-5753 | 1 | Fitting-45 DEG |
| 10:2:1 | 130-5772 | 1 | Fitting Kit |
| 10:2:2 | 117-2778 | 1 | O-Ring |

| Ref. | Part Number | Qty. | Description |
|---|---|---|---|
| 10:3 | 130-5751 | 1 | Fitting-Female, 90 DEG |
| 10:3:1 | 130-5772 | 1 | Fitting Kit |
| 10:3:2 | 117-2778 | 1 | O-Ring |
| 10:4 | 130-5958 | 1 | Cover-Foam |
| 10:5 | 3290-378 | 8 | Tie-Cable |
| 11 | 125-9706 | 1 | Hose-Heater |
| 12 | 120-4947 | 1 | Valve-Heater |
| 13 | 125-9865 | 1 | Hose-Drain |
| 14 | 130-0578 | 1 | Fitting-Barb, 90 DEG |
| 15 | 125-9866 | 1 | Hose-Drain |
| 20 | 2412-137 | 5 | Clamp-R, Double |
| 21 | 3234-39 | 4 | Screw-HHF |
| 22 | 3231-21 | 1 | Screw-CARR |
| 23 | 104-8301 | 5 | Nut-HF, NI |
| 24 | 3290-378 | 1 | Tie-Cable |
| 25 | 133-0779 | 1 | Tag-Hang, Oil Refrigerant |
| 26 | 133-1025 | 1 | Wrap-Abrasion |
| 27 | 94-3890 | 2 | Tie-Cable |

# Pre-Filter Screen Assembly

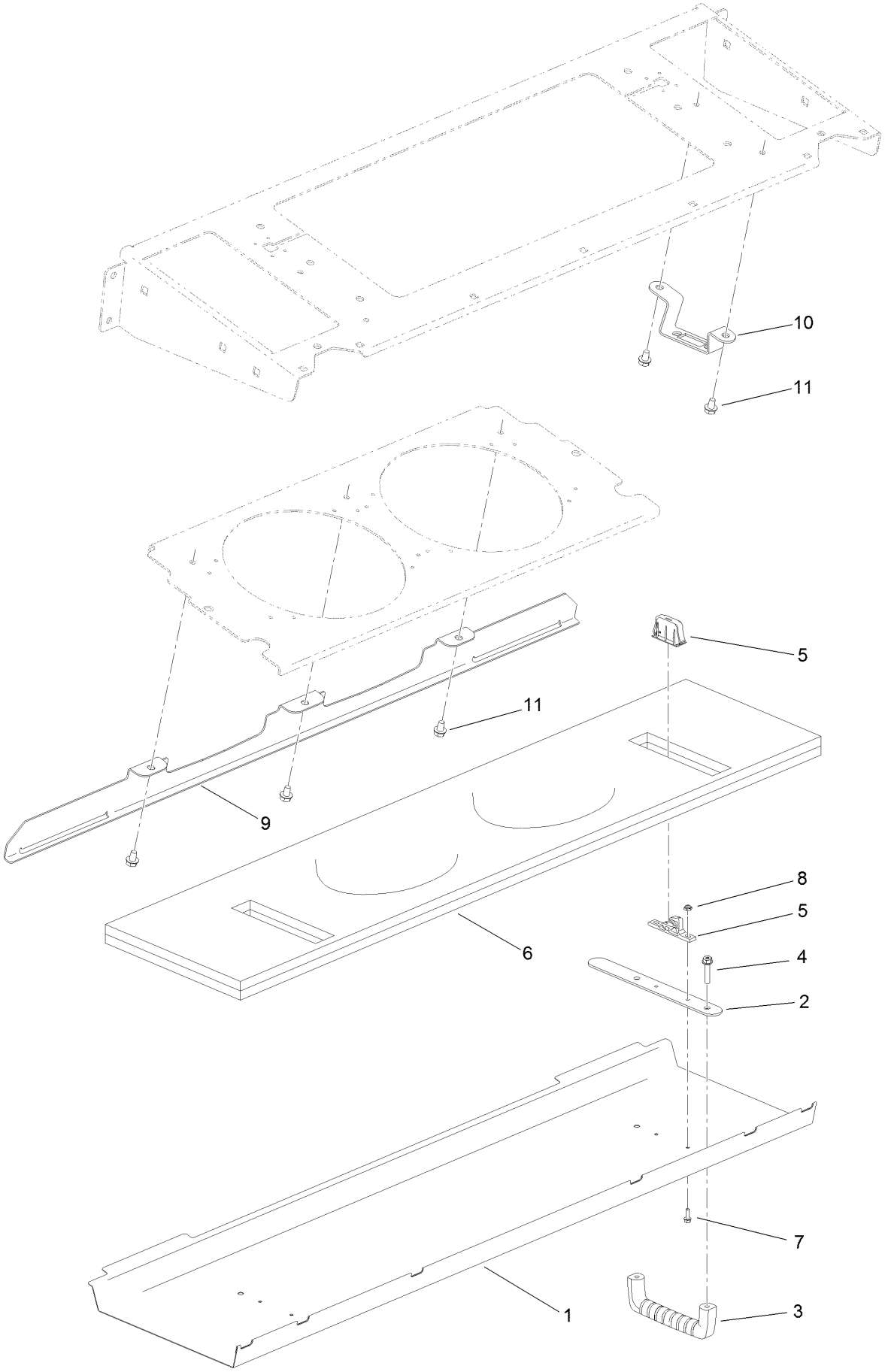

# Pre-Filter Screen Assembly (continued)

| Ref. | Part Number | Qty. | Description |
|---|---|---|---|
| 1 | 130-0640-03 | 1 | Screen |
| 2 | 130-0642-03 | 2 | Backplate |
| 3 | 65-5100 | 2 | Handle-Door |
| 4 | 137-3101 | 4 | Screw-Plastic, HWH |
| 5 | 130-0643 | 2 | Latch-Push To Close |
| 6 | 130-5875 | 1 | Pre-Filter |
| 7 | 112-3169 | 4 | Screw-HHF, Serrated |
| 8 | 3296-54 | 4 | Nut-Lock |
| 9 | 132-3630-03 | 1 | Screen-Mount, Front |
| 10 | 136-2171 | 2 | Mount-Latch |
| 11 | 32104-82 | 7 | Screw-HHF |

# Right Side Hose Assembly

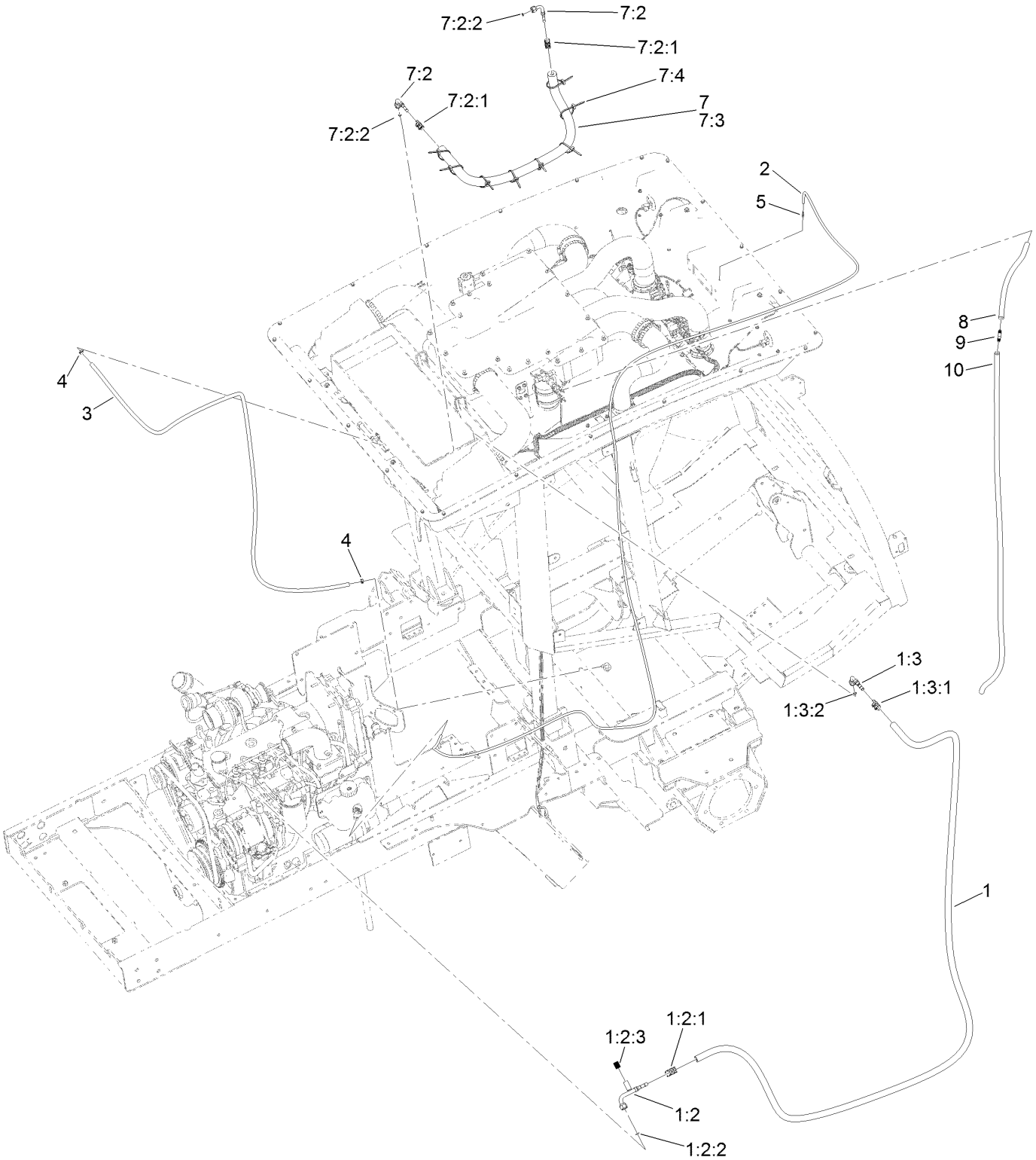

# Right Side Hose Assembly (continued)

| Ref. | Part Number | Qty. | Description |
|---|---|---|---|
| 1 | 130-5621 | 1 | A/C Hose ASM |
| 1:2 | 130-5758 | 1 | Fitting-Female, 90 DEG |
| 1:2:1 | 130-5773 | 1 | Fitting Kit |
| 1:2:2 | 117-2779 | 1 | O-Ring |
| 1:2:3 | 117-2783 | 1 | Cap-Side, High |
| 1:3 | 130-5752 | 1 | Fitting-Female, 90 DEG |
| 1:3:1 | 130-5773 | 1 | Fitting Kit |
| 1:3:2 | 117-2778 | 1 | O-Ring |
| 2 | 130-5624 | 1 | Hose-Fluid, Wiper |
| 3 | 130-5813 | 1 | Hose-Fuel |
| 4 | 2412-98 | 2 | Clamp-Hose |
| 5 | 127-9905 | 1 | Fitting-Hose, Barb |
| 7 | 125-9703 | 1 | Hose ASM |
| 7:2 | 130-5751 | 2 | Fitting-Female, 90 DEG |
| 7:2:1 | 130-5772 | 1 | Fitting Kit |
| 7:2:2 | 117-2778 | 1 | O-Ring |
| 7:3 | 130-5958 | 1 | Cover-Foam |
| 7:4 | 3290-378 | 8 | Tie-Cable |
| 8 | 125-9865 | 1 | Hose-Drain |
| 9 | 130-0578 | 1 | Fitting-Barb, 90 DEG |
| 10 | 125-9866 | 1 | Hose-Drain |

# Roof and Headliner Assembly

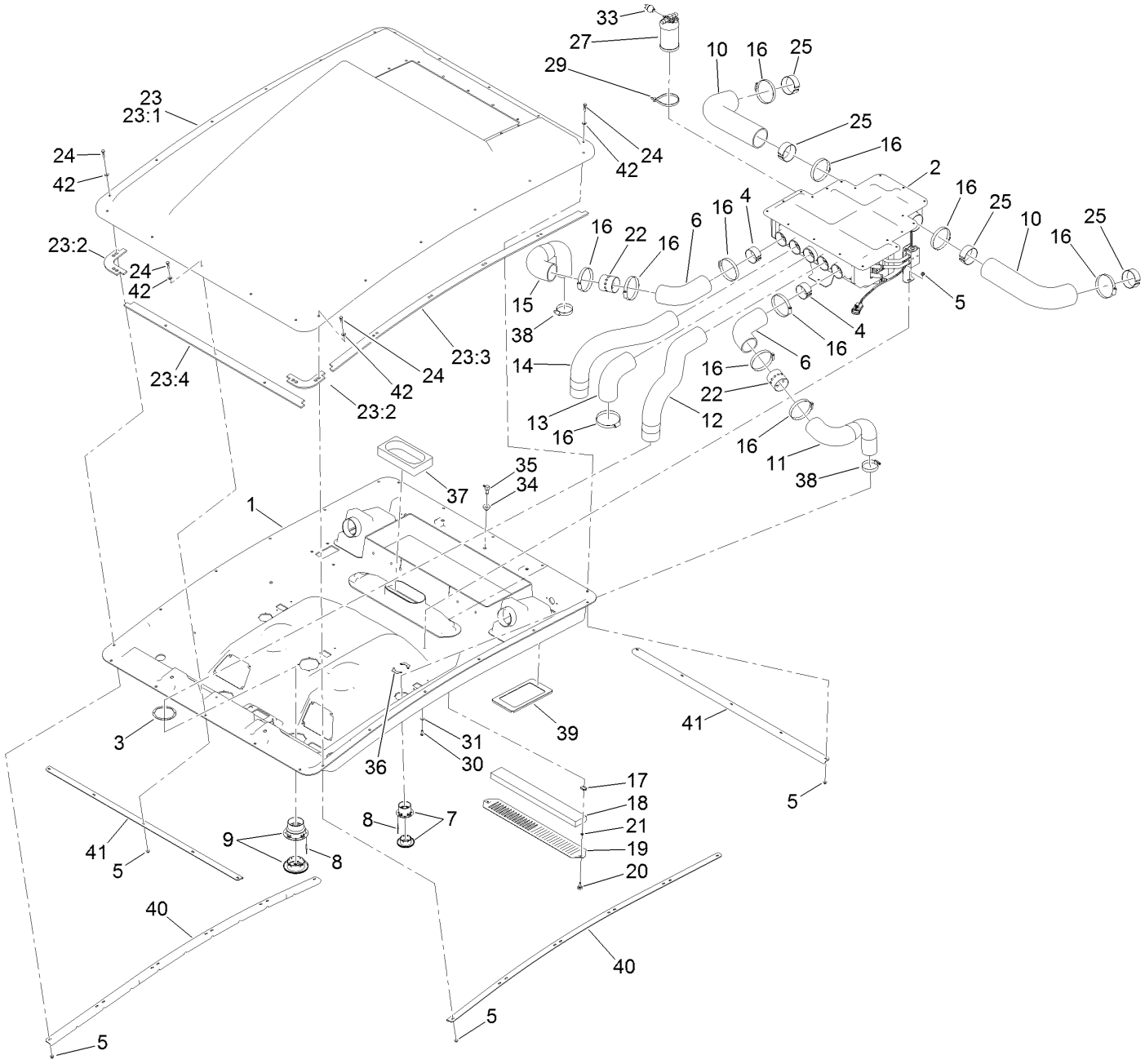

# Roof and Headliner Assembly (continued)

| Ref. | Part Number | Qty. | Description |
|---|---|---|---|
| 1 | 121-8470 | 1 | Headliner |
| 2 | 121-8495 | 1 | Box-Mixing, Heater A/C |
| 3 | 130-0558 | 3 | Backplate-Rivet |
| 4 | 130-5938 | 2 | Tube-Support |
| 5 | 104-7201 | 24 | Nut-HF, NI |
| 6 | 130-5860 | 2 | Hose-Vent |
| 7 | 130-0455 | 2 | Louver-Round, Snap-In |
| 8 | 125-7503 | 20 | Rivet-Pop |
| 9 | 130-0465 | 3 | Louver-Round, Snap-In (4 Inch) |
| 10 | 121-8473 | 2 | Hose-Intake, Fresh Air |
| 11 | 130-5861 | 1 | Hose-Vent, Outer (LH) |
| 12 | 121-8477 | 1 | Hose-Vent, Defrost (LH) |
| 13 | 130-0437 | 1 | Hose-Vent, Center |
| 14 | 121-8478 | 1 | Hose-Vent, Defrost (RH) |
| 15 | 130-5862 | 1 | Hose-Vent, Outer (RH) |
| 16 | 2412-110 | 11 | Clamp-Band/Screw |
| 17 | 107069 | 2 | Clip |
| 18 | 125-9532 | 1 | Filter-Cab, Inside |
| 19 | 125-9604-03 | 1 | Plate-Cover, Recirculation |
| 20 | 125-7438 | 2 | Knob-Screw, Thumb |
| 21 | 32115-15 | 2 | Nut-Push |
| 22 | 130-5927 | 2 | Adapter-Bleed |
| 23 | 132-3601 | 1 | Roof ASM |
| 23:1 | 132-3602 | 1 | Roof |
| 23:2 | 130-5961 | 4 | Seal-Corner |
| 23:3 | 130-5960 | 2 | Seal-Side |
| 23:4 | 130-5962 | 2 | Seal-Front, Rear |
| 24 | 136-8674 | 22 | Bolt-Pivot, Eccentric |
| 25 | 130-5939 | 4 | Tube-Support |
| 27 | 130-5999 | 1 | Drier-Receiver |
| 29 | 3334-945 | 2 | Tie-Cable |
| 30 | 3274-69 | 2 | Screw-HSBH |
| 31 | 3256-1 | 2 | Washer-Flat |
| 33 | 119-4501 | 1 | Switch-Function, Dual |
| 34 | 46-6560 | 1 | Bushing |
| 35 | 104-5228 | 1 | Fitting-Elbow, 90 DEG |
| 36 | 130-0445 | 4 | Backplate-Rivet |
| 37 | 130-0444 | 1 | Foam-Inlet, Airbox |
| 38 | 2412-130 | 2 | Clamp-Hose |
| 39 | 132-3474 | 2 | Insert-Seal, Filter |
| 40 | 132-1461-03 | 2 | Strap-Cab, Side |
| 41 | 132-1462-03 | 2 | Strap-Cab |
| 42 | 3256-74 | 22 | Washer-Flat |

# Headliner Wire Harness and Control Assembly

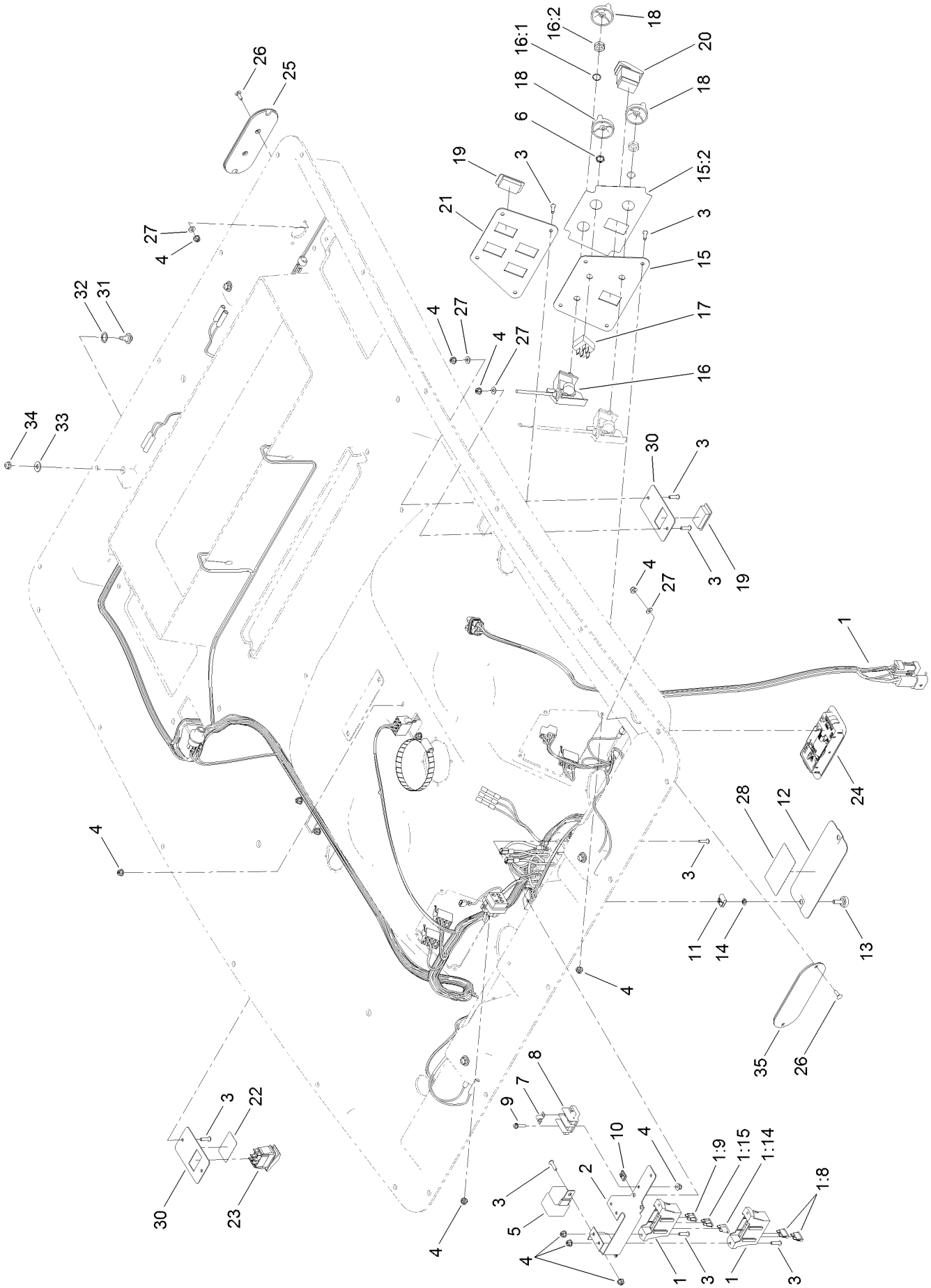

# Headliner Wire Harness and Control Assembly (continued)

| Ref. | Part Number | Qty. | Description |
|---|---|---|---|
| 1 | 122-0723 | 1 | Harness-Wire, Headliner |
| 1:8 | 109355 | 2 | Fuse-Blade, 15 Amp |
| 1:9 | 109103 | 1 | Fuse-Blade, 30 Amp |
| 1:14 | 109101 | 1 | Fuse-Blade, 20 Amp |
| 1:15 | 109102 | 1 | Fuse-Blade, 25 Amp |
| 2 | 125-9606-03 | 1 | Bracket-Fuse Block |
| 3 | 104-2408 | 22 | Screw-HSBH |
| 4 | 120-4578 | 29 | Nut-HF |
| 5 | 99-7430 | 1 | Relay-Mini |
| 6 | 130-0588 | 1 | Nut-Switch |
| 7 | 42863 | 1 | Strip-Jumper |
| 8 | 42862 | 1 | Block-Terminal, Ground |
| 9 | 32105-13 | 3 | Screw-HWH |
| 10 | 107-1013 | 4 | Nut-Speed |
| 11 | 609900 | 2 | Nut-Speed |
| 12 | 125-9603-03 | 1 | Plate-Cover, Fuse |
| 13 | 125-7438 | 2 | Knob-Screw, Thumb |
| 14 | 32115-15 | 2 | Nut-Push |
| 15 | 121-8481 | 1 | Panel-Air/Heat |
| 15:2 | 121-8378 | 1 | Decal, Air/Heat |
| 16 | 125-9677 | 1 | Control-Rotary, Linear |
| 16:1 | 3254-20 | 1 | Washer-Lock, Int |
| 16:2 | 3220-4 | 1 | Nut-Jam |
| 17 | 122-0150 | 1 | Switch, Rotary |
| 18 | 125-9510 | 3 | Knob-Control |
| 19 | 99-7420 | 6 | Plug-Hole |
| 20 | 95-8999 | 1 | Switch-Rocker, On-None-On |
| 21 | 125-9691-03 | 1 | Panel-Switch, Lights |
| 22 | 125-9688 | 1 | Decal-Washer |
| 23 | 119-8355 | 1 | Switch-Rocker |
| 24 | 125-7437 | 1 | Light-Dome |
| 25 | 130-5867 | 2 | Cover-Light, Rear |
| 26 | 3229-34 | 8 | Screw-CARR |
| 27 | 3256-14 | 14 | Washer-Flat |
| 28 | 132-3600 | 1 | Decal-Panel, Fuse |
| 30 | 130-0436 | 3 | Panel-Switch |
| 31 | 92-9698 | 4 | Screw-Shoulder |
| 32 | 94-8196 | 4 | Washer-Nylon |
| 33 | 3256-2 | 4 | Washer-Flat |
| 34 | 104-7201 | 4 | Nut-HF, NI |
| 35 | 130-5868 | 2 | Cover-Light, Front |

# Mixing Box Mounting Bracket and Water Tray Assembly

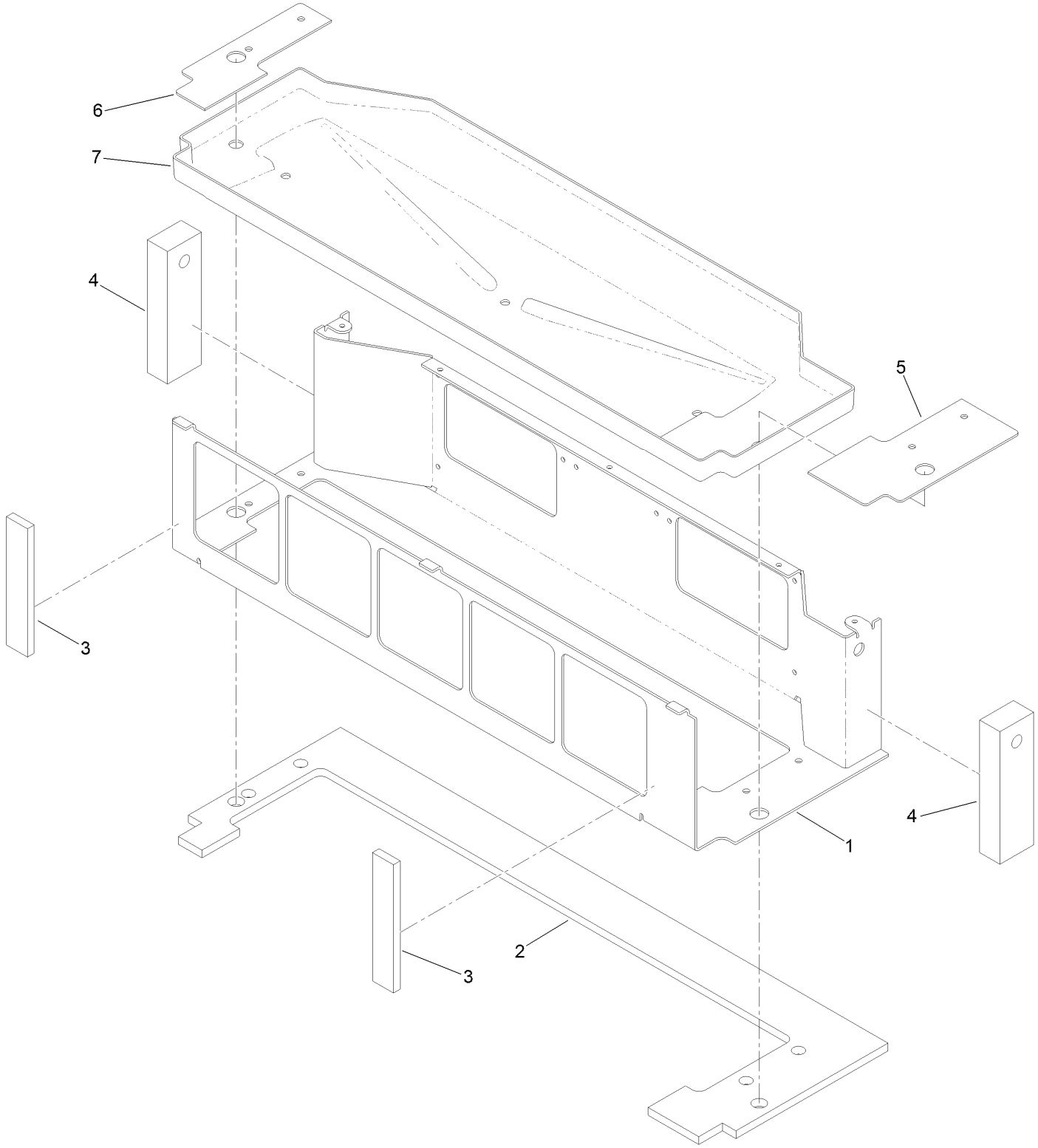

# Mixing Box Mounting Bracket and Water Tray Assembly (continued)

| Ref. | Part Number | Qty. | Description |
|---|---|---|---|
| 1 | 130-5655-03 | 1 | Bracket-Mount |
| 2 | 130-5659 | 1 | Seal-Foam |
| 3 | 130-5808 | 2 | Seal-Foam, Front |
| 4 | 130-0602 | 2 | Seal-End |
| 5 | 130-5653 | 1 | Gasket-Mount, LH Bracket |
| 6 | 130-5654 | 1 | Gasket-Mount, RH Bracket |
| 7 | 130-5660 | 1 | Tray-Water |

# Blower Fan and Evaporator Core Assembly

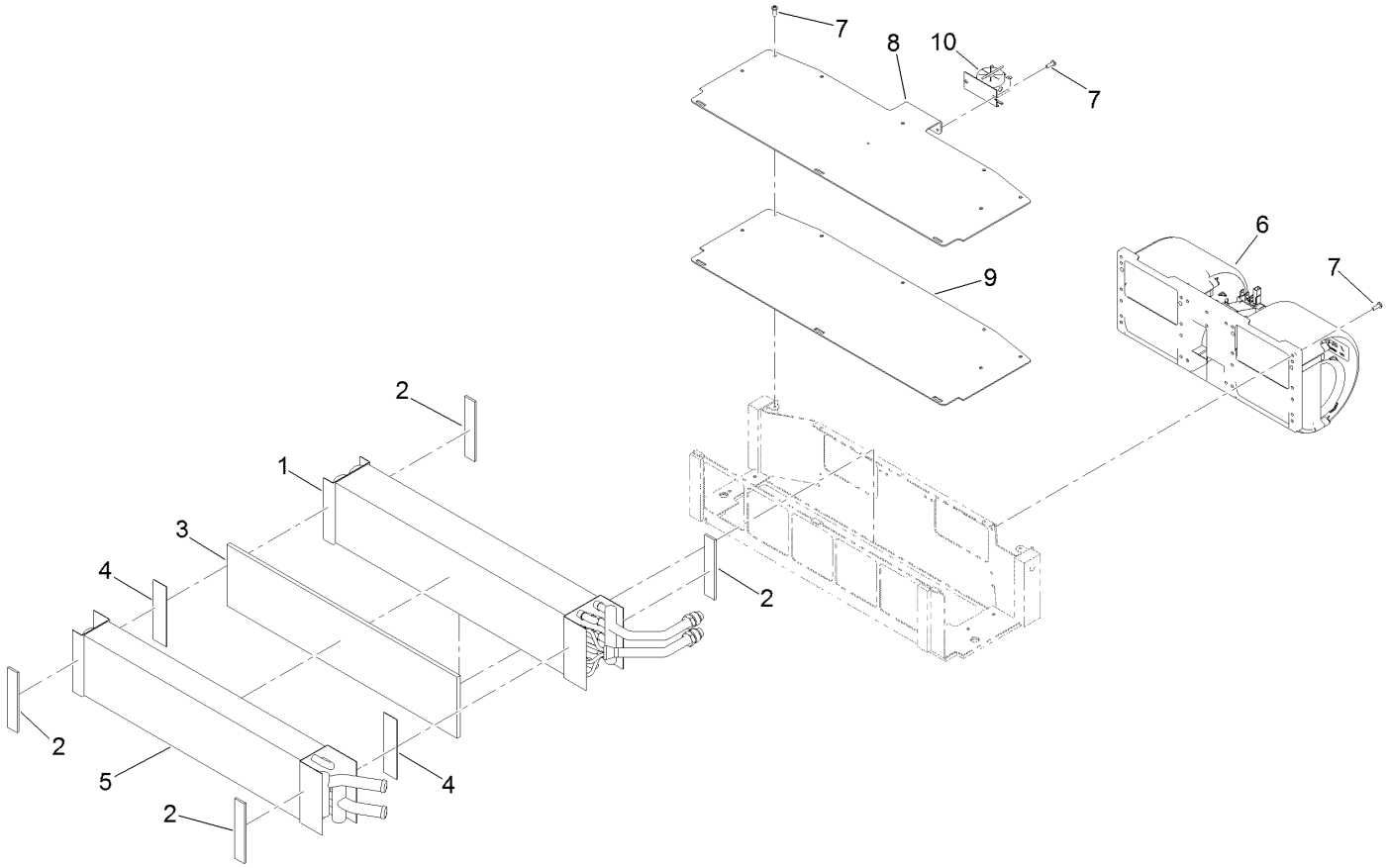

# Blower Fan and Evaporator Core Assembly (continued)

| Ref. | Part Number | Qty. | Description |
|---|---|---|---|
| 1 | 130-5392 | 1 | Core-Evaporator |
| 2 | 130-5658 | 4 | Gasket-Coil |
| 3 | 130-5807 | 1 | Foam |
| 4 | 130-5806 | 2 | Tape, Double-Sided |
| 5 | 127-9915 | 1 | Core-Heater |
| 6 | 121-8451 | 1 | Fan-Blower |
| 7 | 363-8245 | 13 | Screw-TAP |
| 8 | 130-5656-03 | 1 | Cover, Bracket-Mount |
| 9 | 130-5652 | 1 | Gasket-Mount, Cover Bracket |
| 10 | 121-8385 | 1 | Thermostat-Switch, Freeze |

# Heat/Air Conditioner Housing Assembly

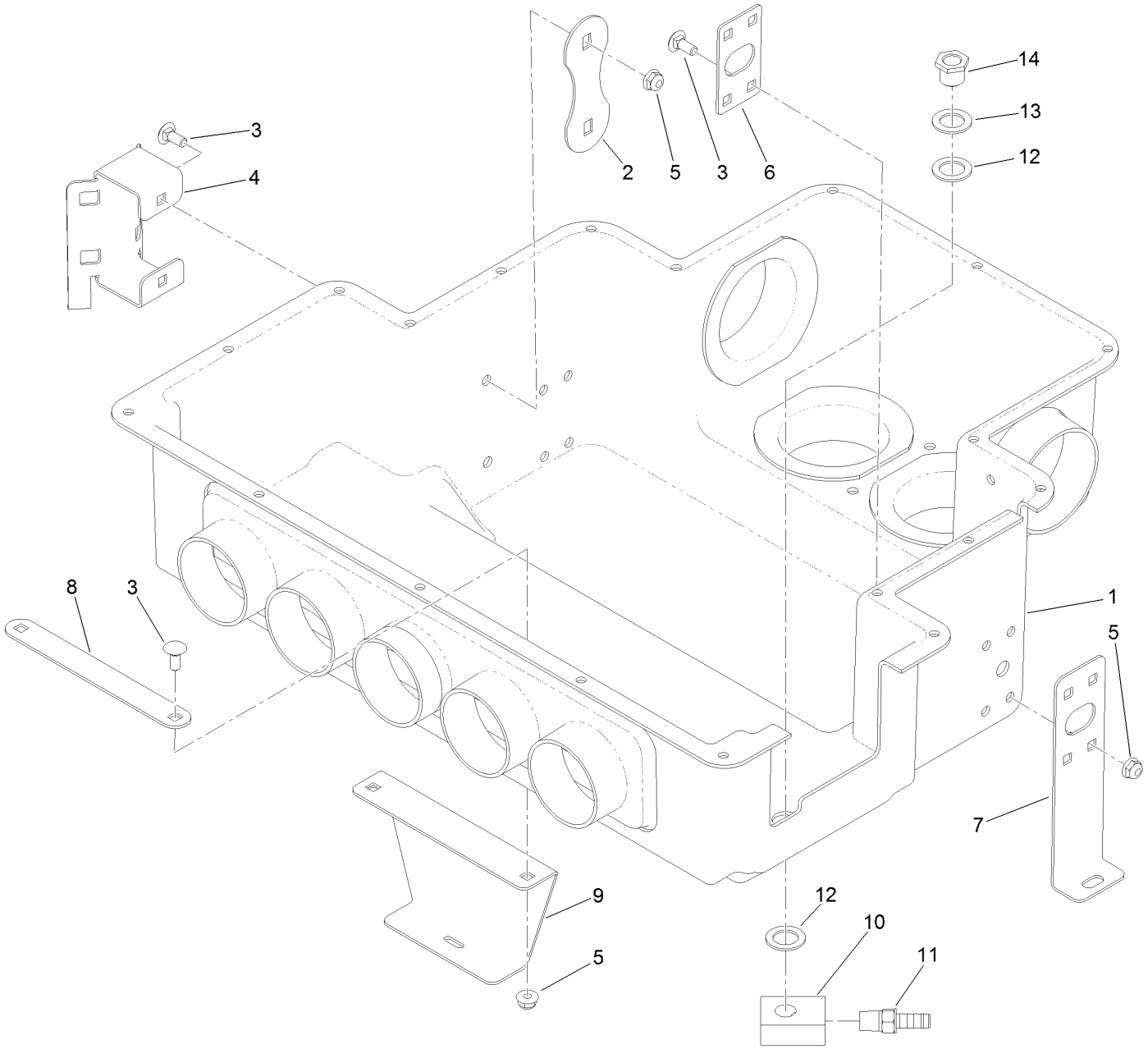

# Heat/Air Conditioner Housing Assembly (continued)

| Ref. | Part Number | Qty. | Description |
|---|---|---|---|
| 1 | 130-5830 | 1 | Housing-Heat/AC |
| 2 | 121-8491 | 1 | Plate-Support |
| 3 | 3229-11 | 12 | Screw-CARR |
| 4 | 121-8490 | 1 | Bracket-Mount, Drier |
| 5 | 104-7201 | 12 | Nut-HF, NI |
| 6 | 130-5834 | 2 | Bracket-Support |
| 7 | 130-5821 | 2 | Bracket-Airbox, Side |
| 8 | 125-7504 | 1 | Plate-Backer, Center |
| 9 | 130-0554 | 1 | Bracket-Airbox, Center |
| 10 | 130-5601 | 2 | Drain-Lower |
| 11 | 108-0342 | 2 | Fitting-Straight |
| 12 | 121-6840 | 4 | Washer-Rubber |
| 13 | 107-3041 | 2 | Washer-Flat |
| 14 | 130-0293 | 2 | Drain-Upper |

# Air Diverter and Expansion Valve Assembly

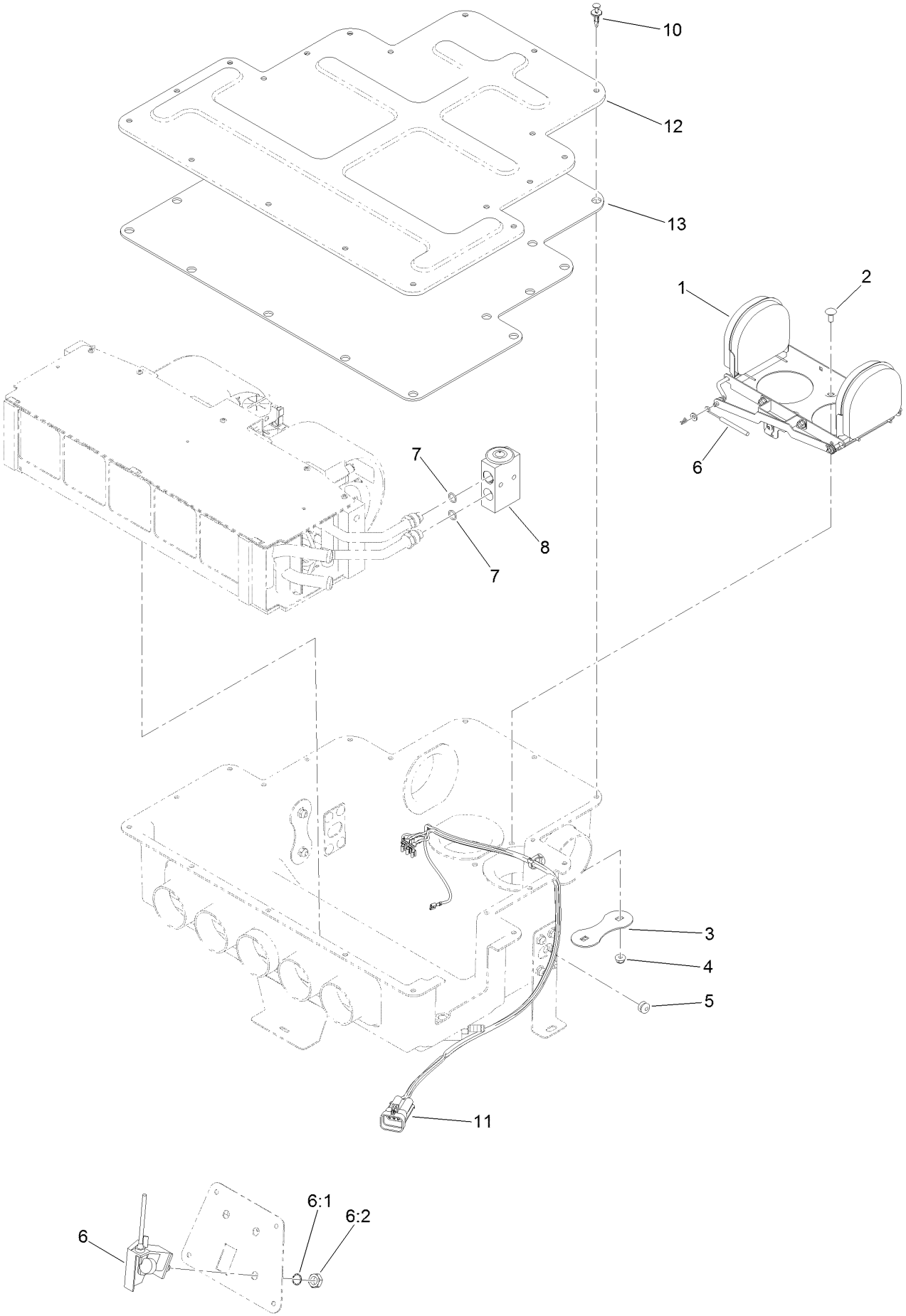

# Air Diverter and Expansion Valve Assembly (continued)

| Ref. | Part Number | Qty. | Description |
|---|---|---|---|
| 1 | 121-8369 | 1 | Air Diverter ASM |
| 2 | 3229-11 | 2 | Screw-CARR |
| 3 | 121-8491 | 1 | Plate-Support |
| 4 | 104-7201 | 2 | Nut-HF, NI |
| 5 | 125-7528 | 1 | Grommet-Cable |
| 6 | 125-9678 | 1 | Control-Rotary, Linear |
| 6:1 | 3254-20 | 1 | Washer-Lock, Int |
| 6:2 | 3220-4 | 1 | Nut-Jam |

| Ref. | Part Number | Qty. | Description |
|---|---|---|---|
| 7 | 125-9524 | 2 | O-Ring |
| 8 | 121-8384 | 1 | Valve-Expansion |
| 10 | 125-9622 | 19 | Rivet-Blind |
| 11 | 122-0153 | 1 | Harness-Wire, Heat/AC Blower |
| 12 | 121-8449 | 1 | Housing-Ventilation, Upper |
| 13 | 130-5614 | 1 | Insulation-Cover |

# Air Diverter Assembly No. 121-8369

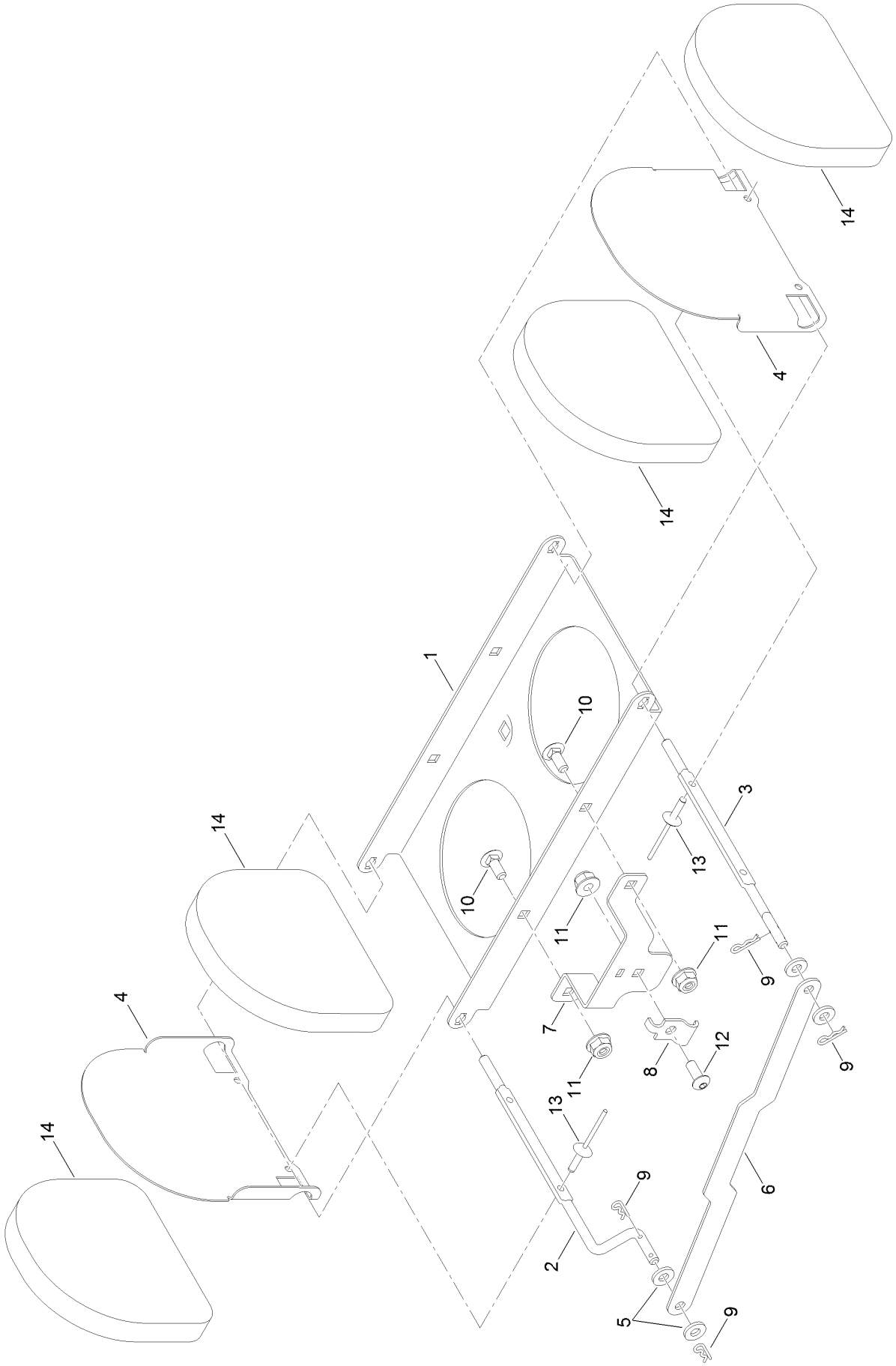

# Air Diverter Assembly No. 121-8369 (continued)

| Ref. | Part Number | Qty. | Description |
|---|---|---|---|
| 1 | 125-9697 | 1 | Base-Mount |
| 2 | 121-8381 | 1 | Shaft-Baffle, RH |
| 3 | 121-8382 | 1 | Shaft-Baffle, LH |
| 4 | 125-9698 | 2 | Baffle-Air |
| 5 | 3256-51 | 4 | Washer-Flat |
| 6 | 125-9696 | 1 | Link-Baffle |
| 7 | 121-8374 | 1 | Mount-Cable |
| 8 | 121-8256 | 1 | Clamp-Conduit |
| 9 | 108-2992 | 4 | Pin-Hair |
| 10 | 1-807513 | 2 | Bolt-CARR |
| 11 | 120-4578 | 3 | Nut-HF |
| 12 | 115-9830 | 1 | Screw-HSBH |
| 13 | 3290-271 | 4 | Rivet-Pop |
| 14 | 125-9699 | 4 | Damper-Foam |

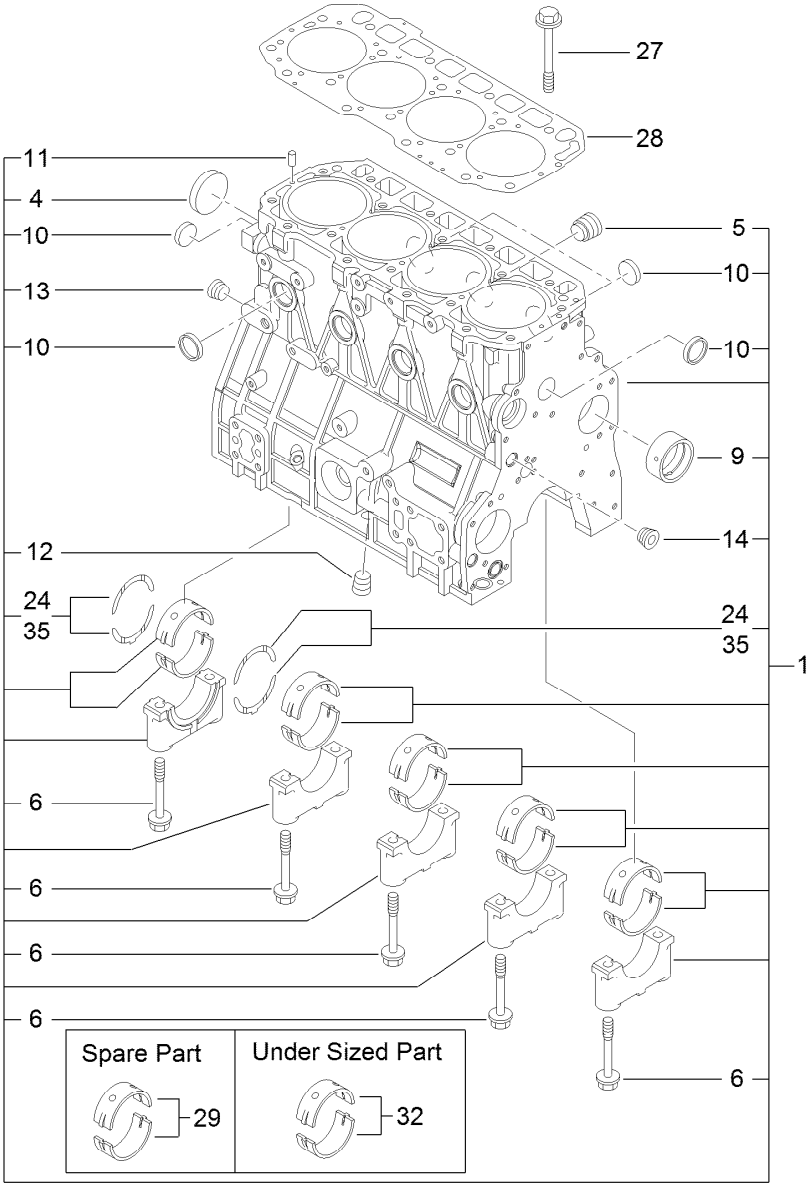


# Cylinder Block Assembly

| Ref. | Part Number | Qty. | Description |
|---|---|---|---|
| 1 | 133-6785 | 1 | Cylinder Block ASM |
| 4 | 133-6627 | 1 | Plug |
| 5 | 125-7170 | 1 | Plug |
| 6 | 133-6628 | 10 | Bolt |
| 9 | 133-6630 | 1 | Bushing-Camshaft |
| 10 | 133-2507 | 8 | Plug |
| 11 | 125-7184 | 2 | Pin-Spring |
| 12 | 133-6798 | 1 | Plug |

| Ref. | Part Number | Qty. | Description |
|---|---|---|---|
| 13 | 133-6798 | 1 | Plug |
| 14 | 133-6798 | 1 | Plug |
| 24 | 133-6631 | 2 | Bearing-Thrust |
| 27 | 133-6626 | 18 | Bolt-Head |
| 28 | 133-6700 | 1 | Gasket-Head, Cylinder |
| 29 | 133-2508 | 5 | Bearing-Main |
| 32 | 133-6629 | 5 | Bearing |
| 35 | 133-6632 | 2 | Bearing-Thrust |

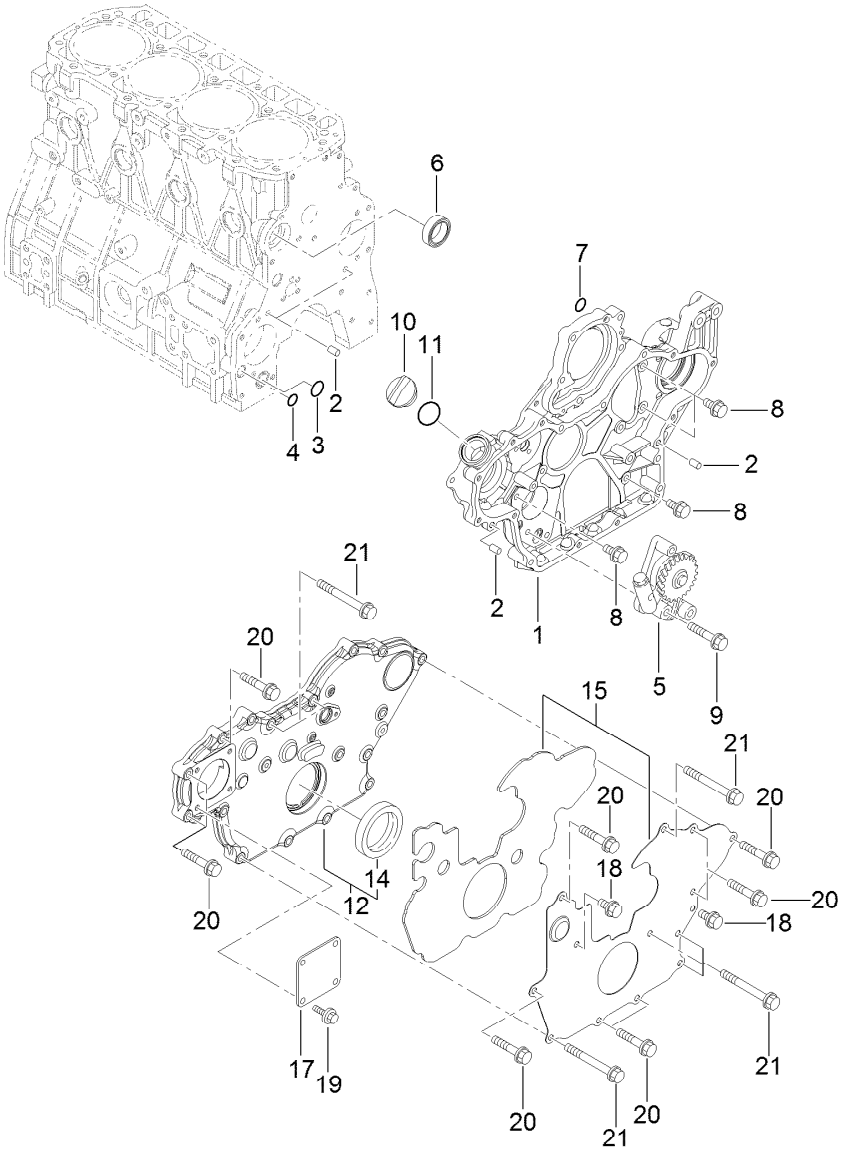


# Gear Housing Assembly

| Ref. | Part Number | Qty. | Description |
|---|---|---|---|
| 1 | 133-6754 | 1 | Case-Gear |
| 2 | 125-6995 | 4 | Pin |
| 3 | 133-6653 | 1 | O-Ring |
| 4 | 133-6654 | 1 | O-Ring |
| 5 | 133-6664 | 1 | Oil Pump ASM |
| 6 | 133-6672 | 1 | Gasket-CW P, Out |
| 7 | 93-0400 | 1 | O-Ring |
| 8 | 125-7214 | 4 | Bolt |
| 9 | 125-7219 | 3 | Bolt |
| 10 | 125-6972 | 1 | Cover-Filler |

| Ref. | Part Number | Qty. | Description |
|---|---|---|---|
| 11 | 125-7197 | 1 | O-Ring |
| 12 | 133-6701 | 1 | Gearcase Cover ASM |
| 14 | 133-6669 | 1 | Seal-Oil |
| 15 | 133-6703 | 1 | Gearcase Cover ASM |
| 17 | 125-6977 | 1 | Cover |
| 18 | 125-7214 | 2 | Bolt |
| 19 | 125-7214 | 4 | Bolt |
| 20 | 125-7218 | 10 | Bolt |
| 21 | 133-2492 | 7 | Bolt |

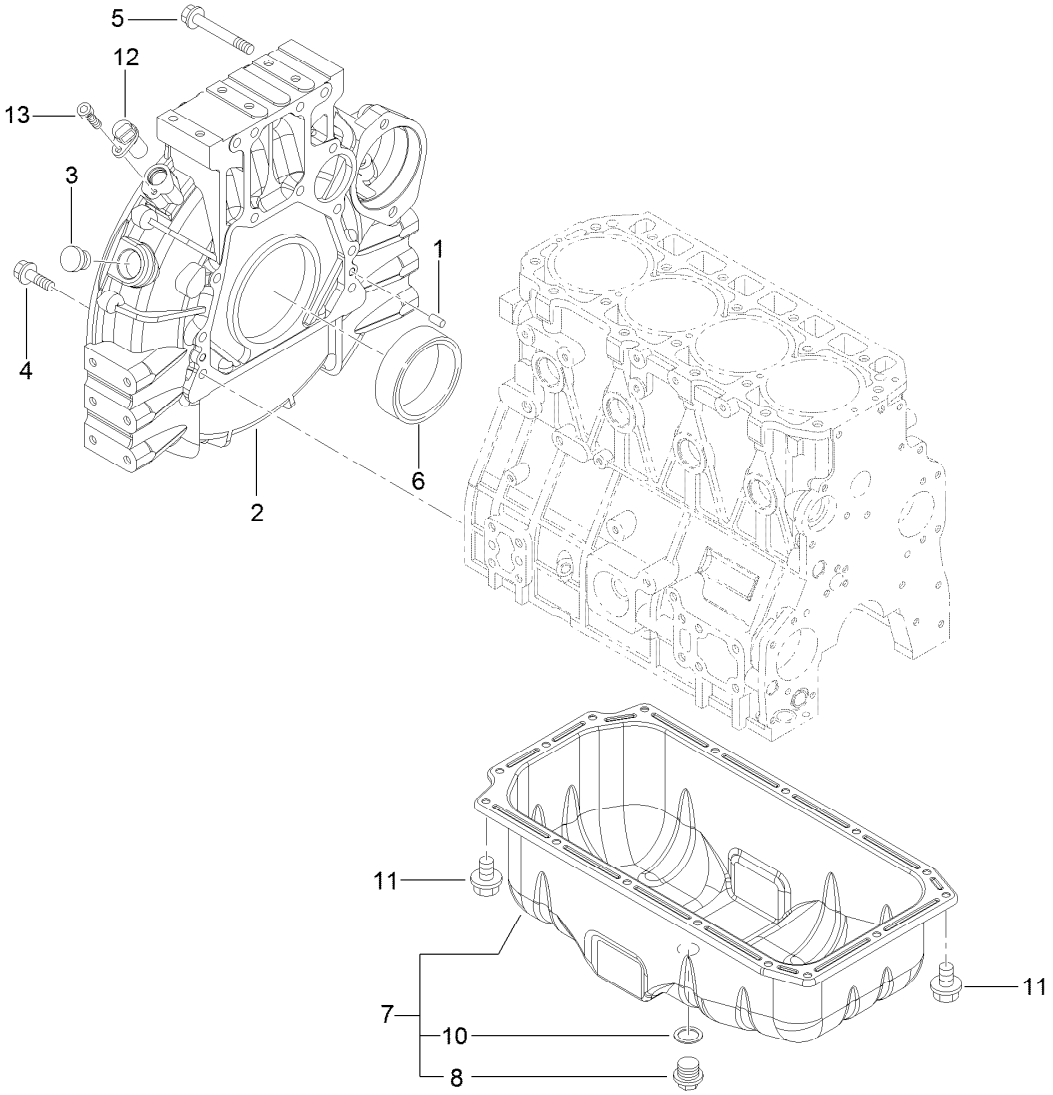


# Flywheel Housing and Oil Sump Assembly

| *Ref.* | *Part Number* | *Qty.* | *Description* |
|---|---|---|---|
| 1 | 125-6995 | 2 | Pin |
| 2 | 133-6702 | 1 | Housing-Flywheel |
| 3 | 125-6910 | 1 | Cap |
| 4 | 133-2499 | 9 | Bolt |
| 5 | 133-2500 | 4 | Bolt |
| 6 | 133-6668 | 1 | Seal |
| 7 | 133-6691 | 1 | Oil Sump ASM |
| 8 | 125-6912 | 1 | Plug-Drain |
| 10 | 125-7177 | 1 | Washer-Seal |
| 11 | 125-7212 | 16 | Bolt |
| 12 | 127-3062 | 1 | Sensor-Rev, Flywheel |
| 13 | 127-3184 | 1 | Bolt |

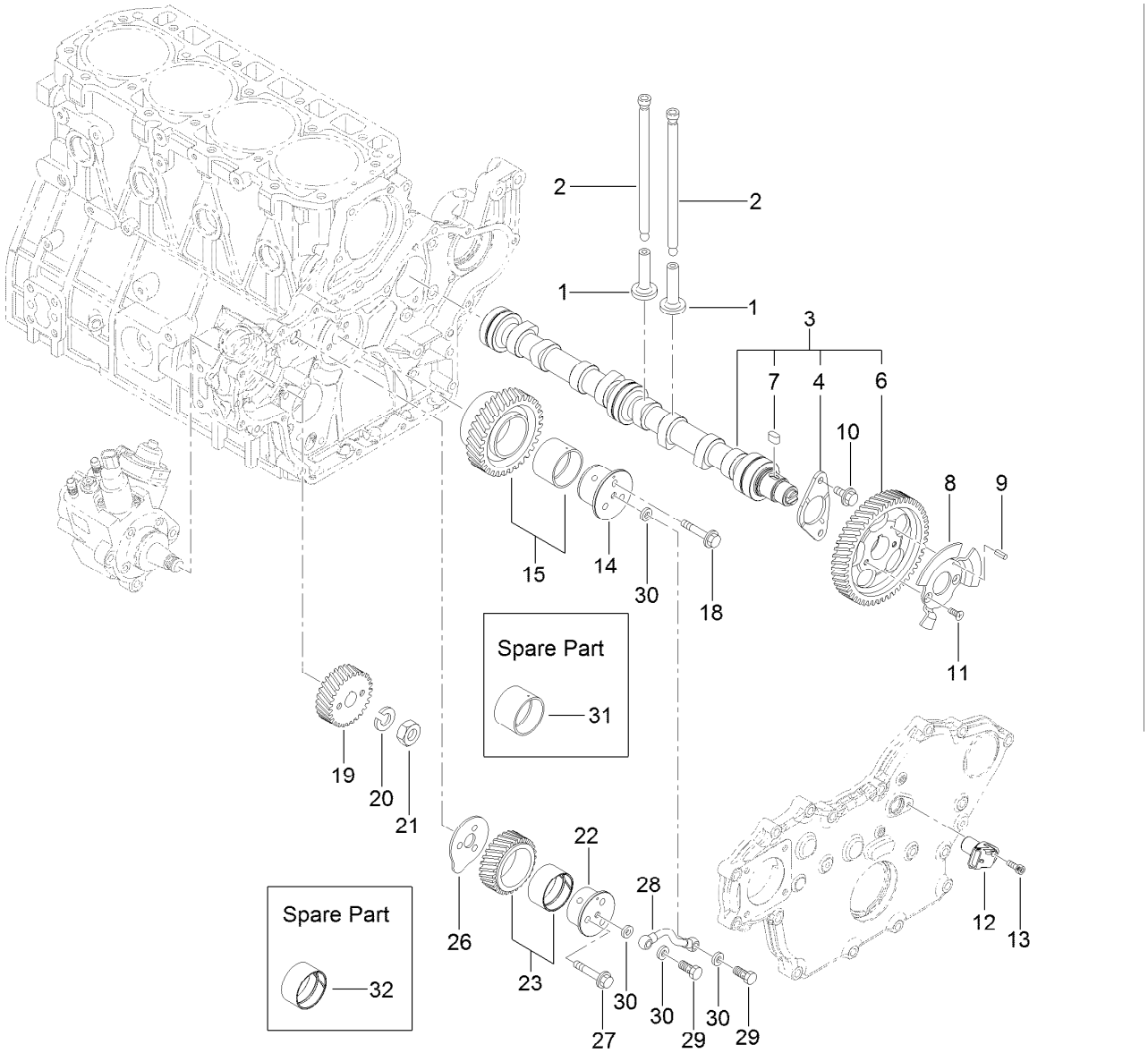


# Camshaft and Driving Gear Assembly

| Ref. | Part Number | Qty. | Description |
|---|---|---|---|
| 1 | 125-7016 | 8 | Tappet |
| 2 | 133-6644 | 8 | Rod-Push |
| 3 | 133-6726 | 1 | Cam Shaft ASM |
| 4 | 125-7008 | 1 | Metal-Thrust |
| 6 | 133-6725 | 1 | Gear-Camshaft |
| 7 | 125-7185 | 1 | Key |
| 8 | 133-6727 | 1 | Pulser-Gear, Cam |
| 9 | 125-7182 | 1 | Pin-Spring |
| 10 | 125-7213 | 2 | Bolt |
| 11 | 133-2504 | 2 | Screw |
| 12 | 127-3054 | 1 | Sensor-Rev, Gear |
| 13 | 127-3184 | 1 | Bolt |
| 14 | 133-6731 | 1 | Shaft-Gear A, Idle |
| 15 | 133-6652 | 1 | Idle Gear ASM |

| Ref. | Part Number | Qty. | Description |
|---|---|---|---|
| 18 | 125-7220 | 3 | Bolt |
| 19 | 133-6737 | 1 | Gear-Pump, Supply |
| 20 | 127-3167 | 1 | Washer-Spring |
| 21 | 127-3185 | 1 | Nut-Lock |
| 22 | 133-6732 | 1 | Shaft-Gear B, Idle |
| 23 | 133-6734 | 1 | Idle Gear B ASM |
| 26 | 133-6735 | 1 | Plate-Shaft B, Idle |
| 27 | 125-7219 | 3 | Bolt |
| 28 | 133-6736 | 1 | L O Pipe ASM |
| 29 | 133-6600 | 2 | Bolt-Joint, Pipe |
| 30 | 125-7174 | 4 | Washer-Seal |
| 31 | 133-6624 | 1 | Bushing-Gear, Idle |
| 32 | 133-6733 | 1 | Bushing |

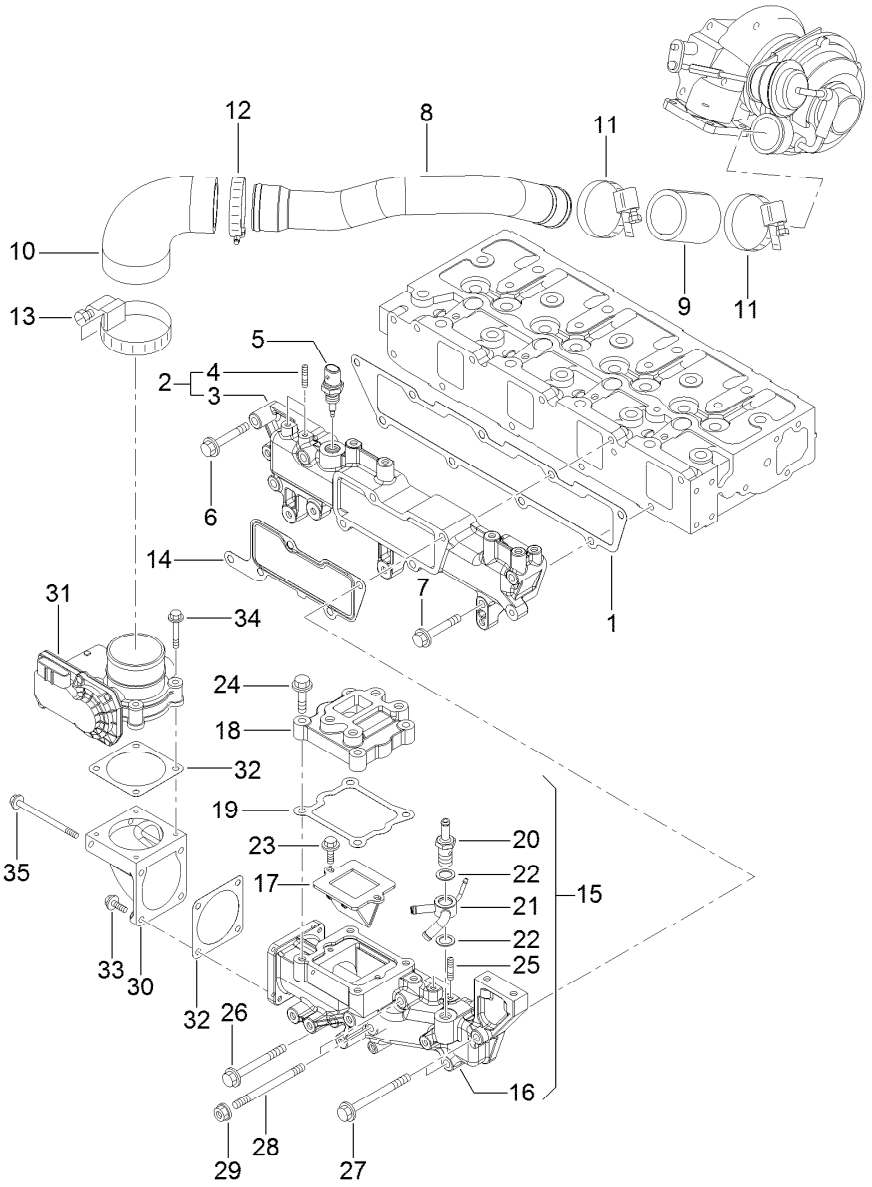


# Suction Manifold Assembly

| Ref. | Part Number | Qty. | Description |
|---|---|---|---|
| 1 | 133-6708 | 1 | Gasket-Manifold |
| 2 | 133-6758 | 1 | Intake Manifold ASM |
| 3 | 133-6757 | 1 | Manifold-Intake, Air |
| 4 | 127-3180 | 2 | Stud |
| 5 | 127-3031 | 1 | Sensor-Temp, Air |
| 6 | 125-7219 | 1 | Bolt |
| 7 | 125-7221 | 4 | Bolt |
| 8 | 133-6764 | 1 | Duct-Intake |
| 9 | 127-3096 | 1 | Joint-Rubber |
| 10 | 133-6765 | 1 | Joint-Hose |
| 11 | 127-3170 | 2 | Clamp-Hose |
| 12 | 125-7190 | 1 | Clamp-Hose |
| 13 | 127-3171 | 1 | Clamp-Hose |
| 14 | 133-6709 | 1 | Gasket-Collector |
| 15 | 133-6760 | 1 | Collector ASM |
| 16 | 133-6759 | 1 | Collector |
| 17 | 133-6762 | 1 | Valve-Reed |
| 18 | 133-6716 | 1 | Spacer-Valve, E G R |
| 19 | 133-6717 | 1 | Gasket-V Spacer, E G R |
| 20 | 127-3080 | 1 | Joint-Hose |
| 21 | 133-6743 | 1 | Joint-Hose |
| 22 | 127-3166 | 2 | Washer-Seal |
| 23 | 125-7207 | 2 | Bolt |
| 24 | 125-7217 | 4 | Bolt |
| 25 | 127-3180 | 2 | Stud |
| 26 | 127-3178 | 1 | Bolt |
| 27 | 133-2493 | 2 | Bolt |
| 28 | 133-2501 | 2 | Stud |
| 29 | 125-7229 | 2 | Nut |
| 30 | 127-3035 | 1 | Bend-Inlet |
| 31 | 127-3036 | 1 | Body-Throttle |
| 32 | 127-3037 | 2 | Gasket-Throttle |
| 33 | 125-7209 | 2 | Bolt |
| 34 | 125-7211 | 4 | Bolt |
| 35 | 127-3177 | 2 | Bolt |

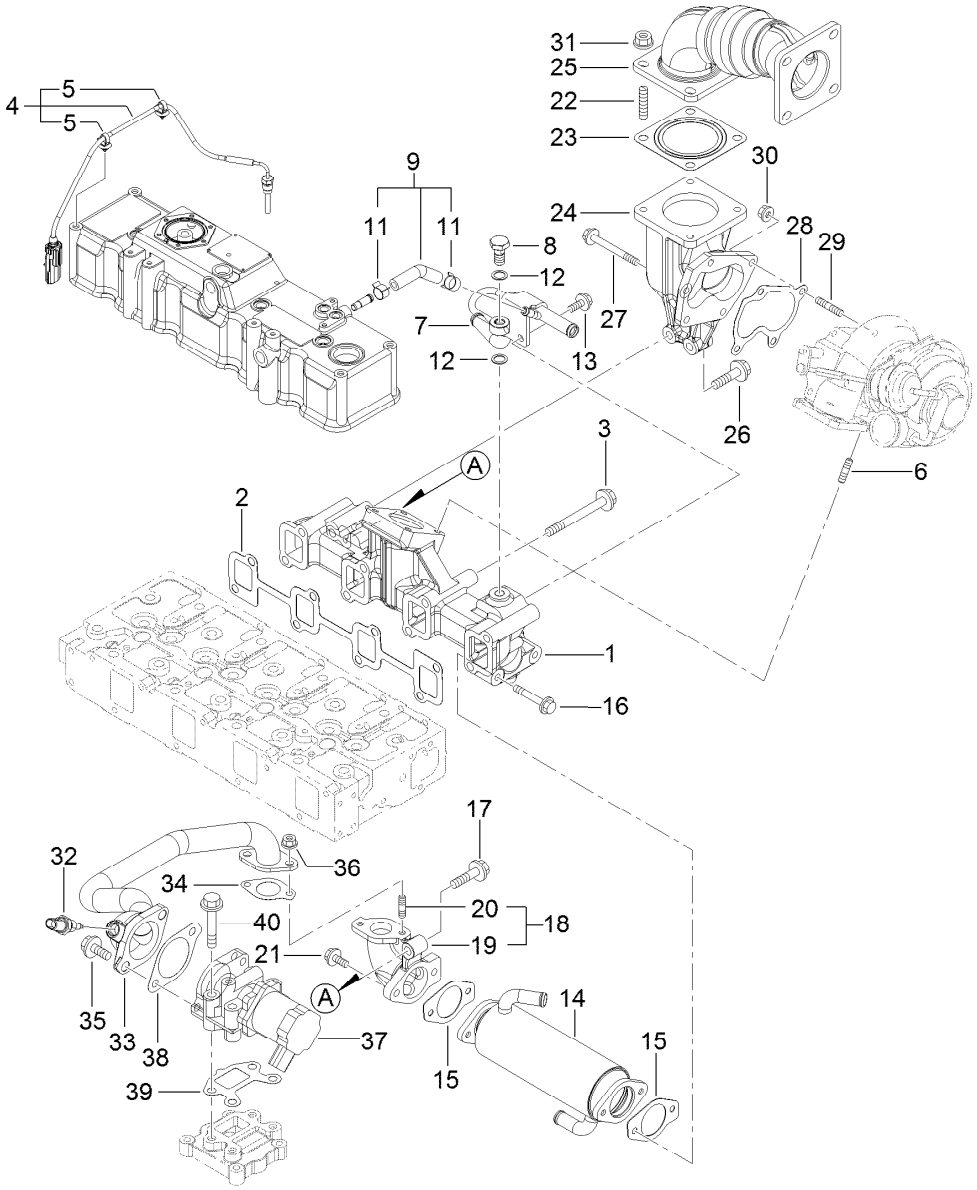


# Exhaust Manifold Assembly

| Ref. | Part Number | Qty. | Description |
|---|---|---|---|
| 1 | 133-6761 | 1 | Manifold-Exhaust |
| 2 | 133-6710 | 1 | Gasket-Manifold |
| 3 | 133-6791 | 8 | Bolt |
| 4 | 133-6718 | 1 | Sensor-Temp, Exhaust |
| 5 | 127-3087 | 2 | Band-Clip |
| 6 | 125-7043 | 4 | Stud |
| 7 | 133-6711 | 1 | Pipe-Pressure, Exhaust |
| 8 | 127-3039 | 1 | Bolt-Joint, Pipe |
| 9 | 133-6712 | 1 | Exhaust Pressure Hose ASM |
| 11 | 127-3041 | 2 | Clip-Hose |
| 12 | 127-3174 | 2 | Gasket |
| 13 | 125-7214 | 2 | Bolt |
| 14 | 133-6713 | 1 | Cooler-E G R |
| 15 | 133-6698 | 2 | Gasket-Cooler, E G R |
| 16 | 133-6714 | 2 | Bolt |
| 17 | 133-6792 | 1 | Bolt |
| 18 | 133-6720 | 1 | E G R-C Out Bend ASM |
| 19 | 133-6721 | 1 | Bend-Out, E G R-C |
| 20 | 125-7043 | 2 | Stud |
| 21 | 125-7595 | 2 | Bolt |
| 22 | 127-2984 | 4 | Stud |
| 23 | 127-2987 | 1 | Gasket-Silencer |
| 24 | 133-6697 | 1 | Pipe-Exhaust |
| 25 | 133-6788 | 1 | Pipe-Exhaust |
| 26 | 133-6792 | 2 | Bolt |
| 27 | 133-6606 | 1 | Bolt |
| 28 | 133-6619 | 1 | Gasket |
| 29 | 125-6906 | 3 | Stud |
| 30 | 125-7229 | 3 | Nut |
| 31 | 125-7230 | 4 | Nut |
| 32 | 127-3047 | 1 | Sensor-Gas Temp, E G R |
| 33 | 133-6719 | 1 | E G R Pipe ASM |
| 34 | 127-3016 | 1 | Gasket |
| 35 | 133-2496 | 2 | Bolt |
| 36 | 125-7229 | 2 | Nut |
| 37 | 133-6722 | 1 | Valve-E G R |
| 38 | 133-6723 | 1 | Gasket-In, E G R-V |
| 39 | 133-6724 | 1 | Gasket-Out, E G R-V |
| 40 | 93-0479 | 4 | Bolt |

# Cylinder Head and Cover Assembly

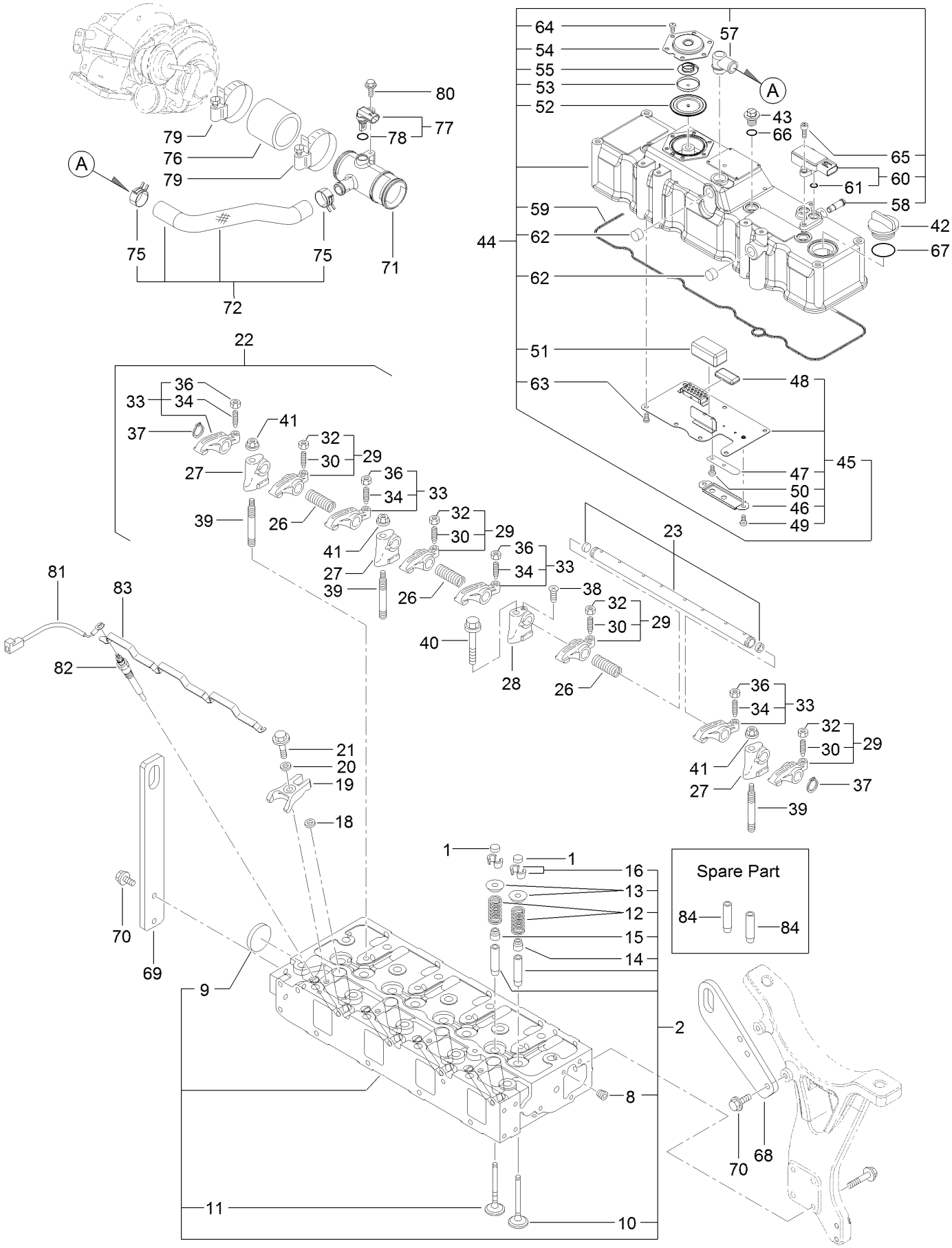

# Cylinder Head and Cover Assembly (continued)

| Ref. | Part Number | Qty. | Description |
|---|---|---|---|
| 1 | 127-2996 | 8 | Cap-Valve |
| 2 | 133-6756 | 1 | Cylinder Head ASM |
| 8 | 133-6797 | 1 | Plug |
| 9 | 125-7240 | 1 | Plug |
| 10 | 133-6633 | 4 | Valve-Intake |
| 11 | 133-6634 | 4 | Valve-Exhaust |
| 12 | 133-6635 | 8 | Spring-Valve |
| 13 | 127-3013 | 8 | Retainer-Spring |
| 14 | 127-2986 | 4 | Seal-Stem, Valve |
| 15 | 127-3027 | 4 | Seal-Stem, Valve |
| 16 | 127-3186 | 8 | Pin-Cotter |
| 18 | 127-3021 | 4 | Gasket-Injector |
| 19 | 133-6707 | 4 | Retainer-Injector |
| 20 | 127-2980 | 4 | Washer-Injector |
| 21 | 125-7217 | 4 | Bolt |
| 22 | 133-6636 | 1 | Arm Support ASM |
| 23 | 133-6637 | 1 | Rocker Shaft ASM |
| 26 | 133-6638 | 3 | Spring-Arm, Rocker |
| 27 | 133-6639 | 3 | Support-Arm, Rocker |
| 28 | 133-6640 | 1 | Support-Arm, Rocker |
| 29 | 133-6642 | 4 | Arm-Rocker |
| 30 | 125-7013 | 4 | Screw-Adjust, Valve |
| 32 | 125-7014 | 4 | Nut |
| 33 | 133-6643 | 4 | Arm-Rocker |
| 34 | 125-7013 | 4 | Screw-Adjust, Valve |
| 36 | 125-7014 | 4 | Nut |
| 37 | 133-6794 | 2 | Ring |
| 38 | 133-2503 | 1 | Screw |
| 39 | 133-6641 | 3 | Stud |
| 40 | 133-2498 | 1 | Bolt |
| 41 | 125-7230 | 3 | Nut |
| 42 | 125-6972 | 1 | Cover-Filler |
| 43 | 125-6974 | 3 | Knob |
| 44 | 133-6755 | 1 | Cylinder Head Cover ASM |
| 45 | 133-6704 | 1 | Plate-Baffle |
| 46 | 133-6705 | 1 | Cover-Plate, Spring |
| 47 | 133-6696 | 1 | Spring-Plate |
| 48 | 133-6661 | 1 | Baffle-Breather |
| 49 | 133-2502 | 2 | Screw |
| 50 | 133-2505 | 1 | Screw |
| 51 | 125-7118 | 1 | Baffle-Breather |
| 52 | 125-6959 | 1 | Diaphragm |
| 53 | 125-6960 | 1 | Plate |
| 54 | 125-6961 | 1 | Plate-Breather |
| 55 | 125-6962 | 1 | Spring-Diaphragm |
| 57 | 133-6603 | 1 | Elbow |
| 58 | 127-3026 | 1 | Joint |
| 59 | 132-4907 | 1 | Gasket-Cover, Head |
| 60 | 127-3029 | 1 | Sensor-Pressure |
| 61 | 127-3032 | 2 | O Ring-Sensor, Pressure |
| 62 | 125-6913 | 2 | Plug |
| 63 | 125-7186 | 7 | Screw |
| 64 | 125-7186 | 6 | Screw |
| 65 | 127-3184 | 2 | Bolt |
| 66 | 93-0418 | 3 | O-Ring |
| 67 | 125-7197 | 1 | O-Ring |
| 68 | 133-6779 | 1 | Lifter-Engine |
| 69 | 133-6695 | 1 | Lifter |
| 70 | 125-7595 | 4 | Bolt |
| 71 | 127-3128 | 1 | Joint-Breather |
| 72 | 133-6787 | 1 | Breather Hose ASM |
| 75 | 125-7040 | 2 | Clip-Hose |
| 76 | 127-3133 | 1 | Hose-Intake |
| 77 | 127-3030 | 1 | Sensor-Temp, Air |
| 78 | 127-3033 | 1 | O-Ring |
| 79 | 125-7190 | 2 | Clamp-Hose |
| 80 | 125-7207 | 1 | Bolt |
| 81 | 131-2704 | 1 | Harness-Wire |
| 82 | 127-2991 | 4 | Plug-Glow |
| 83 | 133-6750 | 1 | Connector-Plug, Glow |
| 84 | 127-2997 | 8 | Guide-Valve |

# Diesel Particulate Filter Assembly

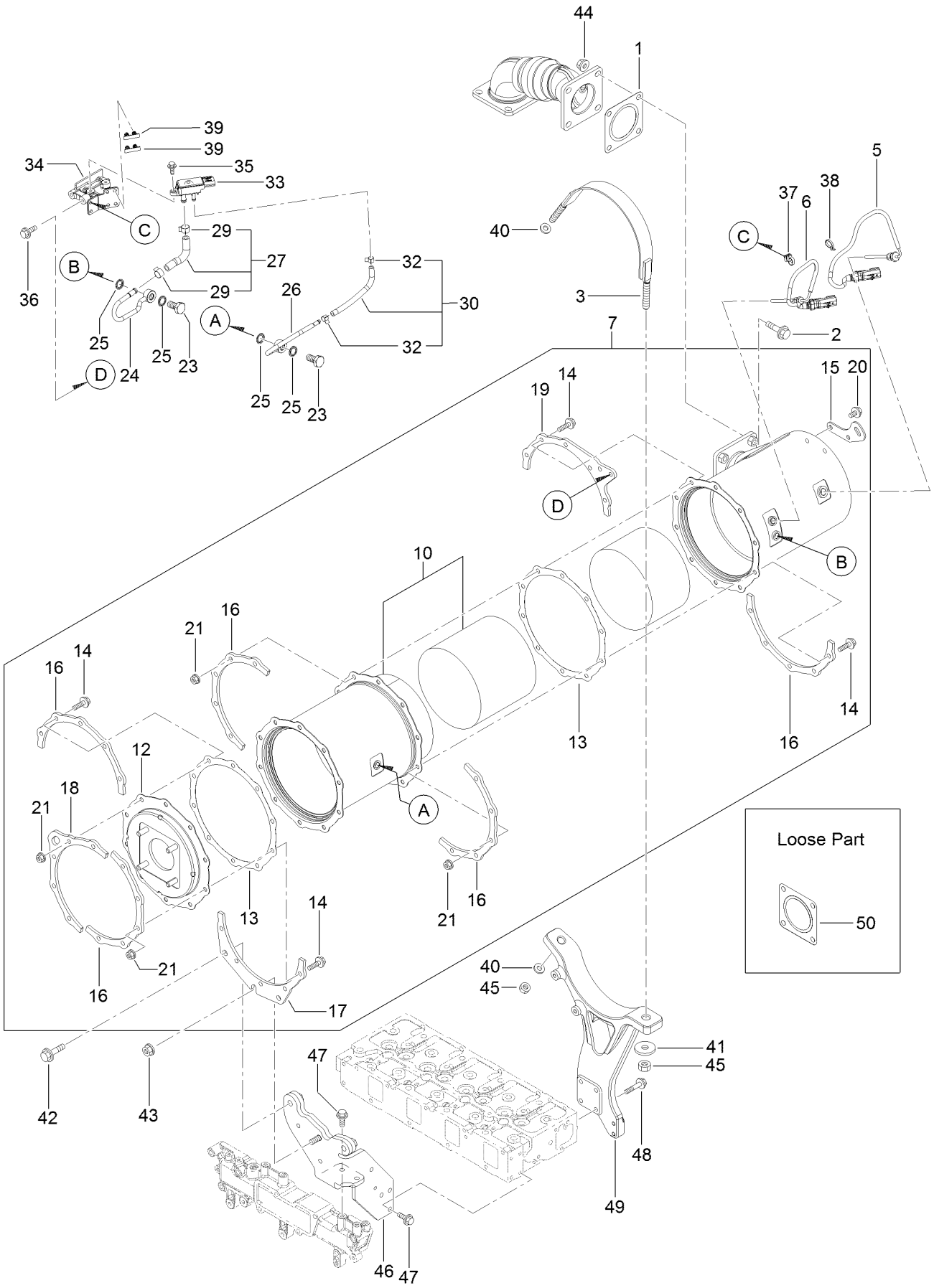

# Diesel Particulate Filter Assembly (continued)

| Ref. | Part Number | Qty. | Description |
|---|---|---|---|
| 1 | 127-2987 | 1 | Gasket-Silencer |
| 2 | 133-6793 | 4 | Bolt |
| 3 | 133-6783 | 1 | Band-D P F |
| 5 | 127-4764 | 1 | Sensor-Temp, Exhaust |
| 6 | 127-4765 | 1 | Sensor-Temp, Exhaust |
| 7 | 133-6786 | 1 | D P F ASM |
| 10 | 130-8348R | 1 | Case-Soot Filter, Recon |
| 10 | 130-8348 | 1 | Case-Soot Filter |
| 12 | 133-6781 | 1 | Flange-Outlet |
| 13 | 127-3162 | 2 | Gasket-D P F |
| 14 | 127-3055 | 20 | Bolt |
| 15 | 127-3144 | 1 | Lifter-D P F |
| 16 | 127-3145 | 5 | Stiffener-D P F, A |
| 17 | 133-6728 | 1 | Stiffener-D P F, B |
| 18 | 127-3147 | 1 | Stiffener-D P F, C |
| 19 | 133-6699 | 1 | Stiffener-D P F, C |
| 20 | 125-7213 | 2 | Bolt |
| 21 | 125-7229 | 20 | Nut |
| 23 | 127-3039 | 2 | Bolt-Joint, Pipe |
| 24 | 133-6775 | 1 | Exhaust Pressure Pipe ASM |
| 25 | 127-3056 | 4 | Gasket-Sensor |
| 26 | 133-6776 | 1 | Exhaust Pressure Pipe ASM |
| 27 | 133-6777 | 1 | Exhaust Pressure Hose ASM |
| 29 | 127-3057 | 2 | Clip-Hose |
| 30 | 127-3059 | 1 | Exhaust Pressure Hose ASM |
| 32 | 127-3058 | 2 | Clip-Hose |
| 33 | 127-3060 | 1 | Sensor-Pressure |
| 34 | 133-6773 | 1 | Bracket-Sensor |
| 35 | 125-7208 | 2 | Bolt |
| 36 | 125-7215 | 2 | Bolt |
| 37 | 127-3087 | 1 | Band-Clip |
| 38 | 127-3124 | 1 | Band |
| 39 | 127-3088 | 2 | Clip-Connnector |
| 40 | 93-0417 | 2 | Washer |
| 41 | 93-0417 | 1 | Washer |
| 42 | 133-2497 | 2 | Bolt |
| 43 | 125-7230 | 1 | Nut |
| 44 | 125-7230 | 4 | Nut |
| 45 | 133-2506 | 2 | Nut |
| 46 | 133-6774 | 1 | Stay-D P F |
| 47 | 125-7595 | 5 | Bolt |
| 48 | 133-6715 | 4 | Bolt |
| 49 | 133-6782 | 1 | Stay-D P F |
| 50 | 127-2987 | 1 | Gasket-Silencer |

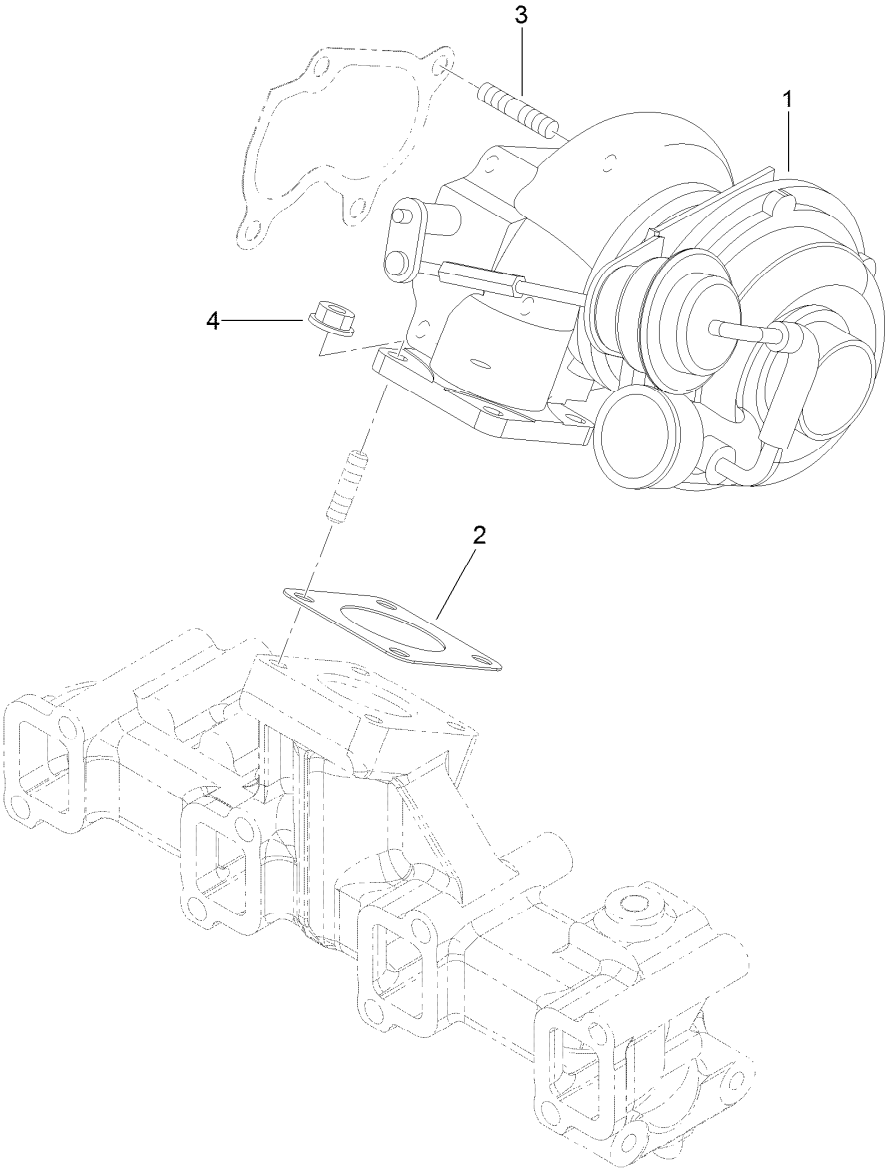


# Turbine Assembly

| Ref. | Part Number | Qty. | Description |
|---|---|---|---|
| 1 | 133-6763 | 1 | Turbocharger-R H F5 |
| 2 | 133-6625 | 1 | Gasket |
| 3 | 125-6906 | 4 | Stud |
| 4 | 125-7229 | 4 | Nut |

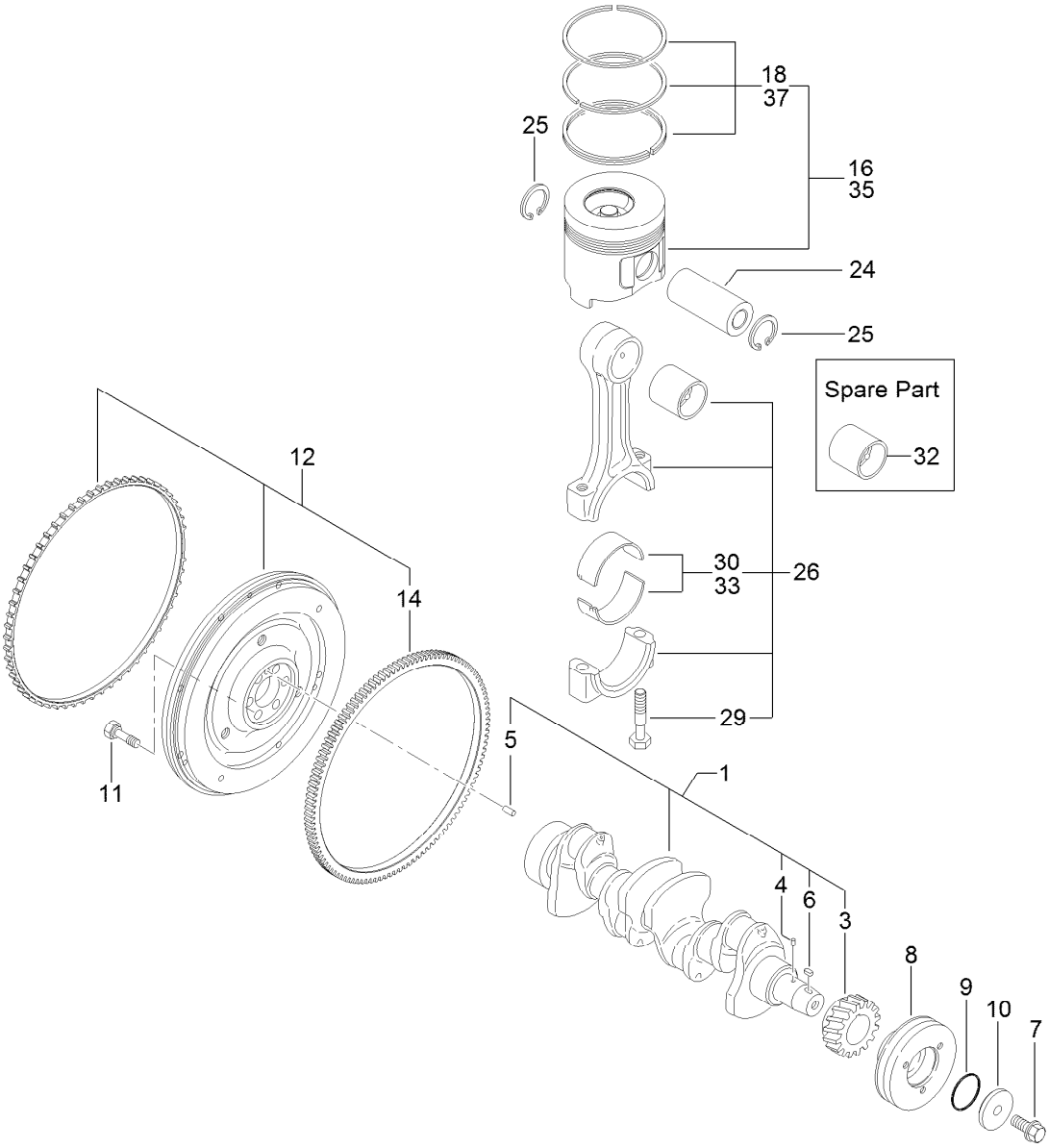


# Crankshaft and Piston Assembly

| Ref. | Part Number | Qty. | Description |
|---|---|---|---|
| 1 | 133-6663 | 1 | Crankshaft ASM |
| 3 | 133-6645 | 1 | Gear-Crankshaft |
| 4 | 133-6611 | 1 | Pin |
| 5 | 133-6612 | 1 | Pin-Parallel |
| 6 | 125-7185 | 1 | Key |
| 7 | 133-6670 | 1 | Bolt |
| 8 | 133-6662 | 1 | Pulley-V |
| 9 | 133-6693 | 1 | Packing-Washer |
| 10 | 133-6694 | 1 | Washer-Pulley, V |
| 11 | 133-6610 | 6 | Bolt-Flywheel |
| 12 | 133-6778 | 1 | Flywheel ASM |
| 14 | 133-6646 | 1 | Gear-Ring |

| Ref. | Part Number | Qty. | Description |
|---|---|---|---|
| 16 | 133-6766 | 4 | Piston ASM |
| 18 | 133-6729 | 4 | Ring ASM |
| 24 | 133-6607 | 4 | Pin-Piston |
| 25 | 133-6795 | 8 | Ring |
| 26 | 133-6647 | 4 | Connecting Rod ASM |
| 29 | 133-6648 | 8 | Bolt-Rod, Connecting |
| 30 | 133-6649 | 4 | Bearing-Pin, Crank |
| 32 | 133-6651 | 4 | Bearing-Pin, Piston |
| 33 | 133-6650 | 4 | Bearing |
| 35 | 133-6767 | 4 | Piston ASM |
| 37 | 133-6730 | 4 | Ring ASM |

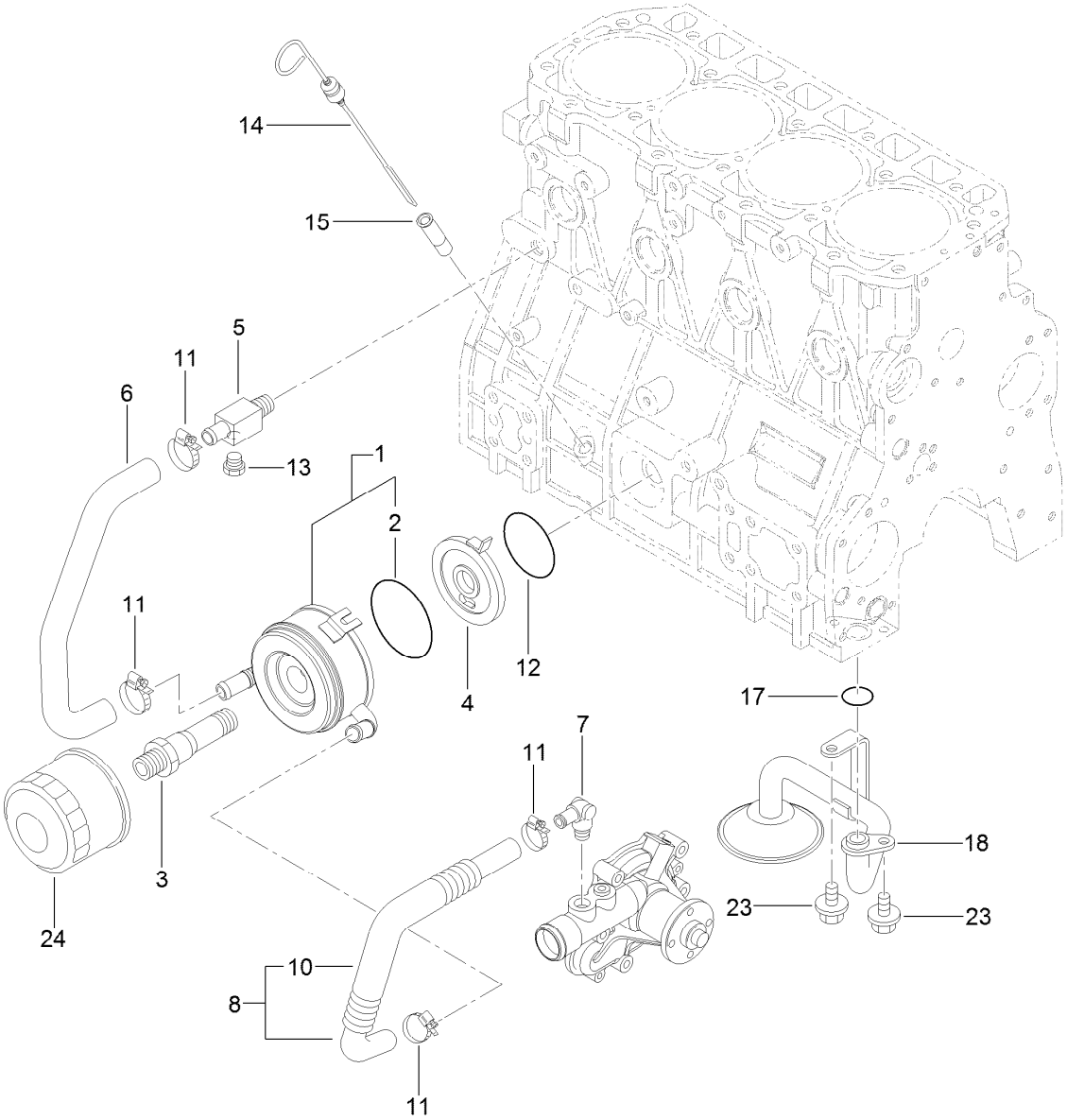


# Lubrication and Oil System Assembly

| Ref. | Part Number | Qty. | Description |
|---|---|---|---|
| 1 | 127-3014 | 1 | Cooler ASM |
| 2 | 127-2985 | 1 | O-Ring |
| 3 | 133-6622 | 1 | Bolt-Cooler |
| 4 | 127-3015 | 1 | Bracket-Cooler |
| 5 | 125-6990 | 1 | Joint |
| 6 | 133-6667 | 1 | Pipe-Water |
| 7 | 127-3003 | 1 | Elbow |
| 8 | 133-6620 | 1 | Pipe-Water |
| 10 | 133-6621 | 1 | Tube-Corrugated |

| Ref. | Part Number | Qty. | Description |
|---|---|---|---|
| 11 | 125-7188 | 4 | Clamp-Hose |
| 12 | 127-3176 | 1 | O-Ring |
| 13 | 125-7171 | 1 | Plug-Drain |
| 14 | 133-6655 | 1 | Dipstick-Oil |
| 15 | 125-6954 | 1 | Guide-Dipstick |
| 17 | 133-6653 | 1 | O-Ring |
| 18 | 133-6656 | 1 | Oil Inlet Pipe ASM |
| 23 | 125-7212 | 2 | Bolt |
| 24 | 125-7025 | 1 | Filter-Engine, Oil |

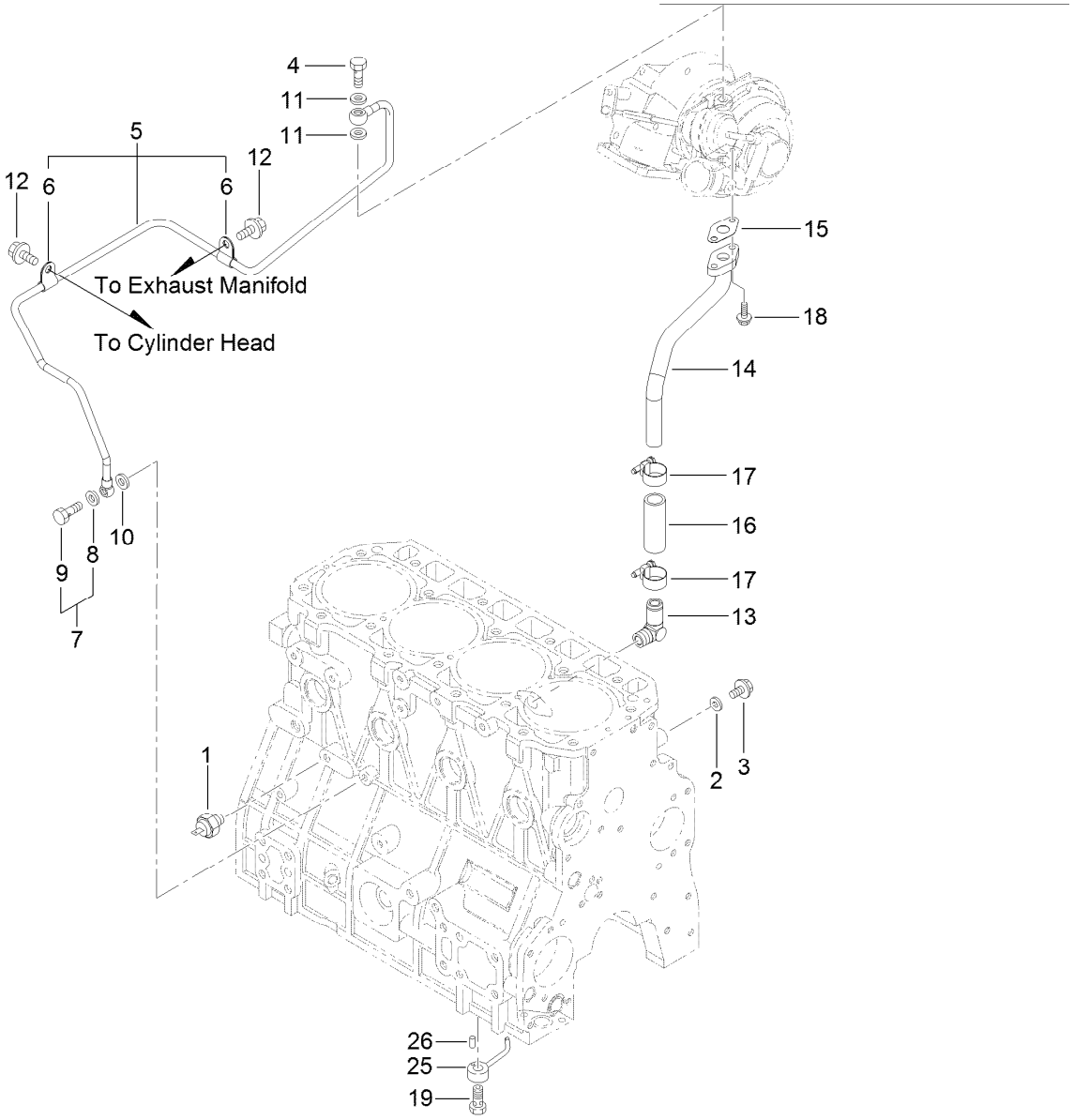


# Lubrication Oil Pipe Assembly

| Ref. | Part Number | Qty. | Description |
|---|---|---|---|
| 1 | 125-6918 | 1 | Switch-Oil |
| 2 | 125-7174 | 1 | Washer-Seal |
| 3 | 125-7212 | 1 | Bolt |
| 4 | 125-6952 | 1 | Bolt-Joint, Pipe |
| 5 | 133-6768 | 1 | L O Pipe ASM |
| 6 | 133-6623 | 2 | Retainer |
| 7 | 125-6988 | 1 | Joint Bolt ASM |
| 8 | 125-7174 | 1 | Washer-Seal |
| 9 | 125-7194 | 1 | Bolt-Joint |
| 10 | 125-7174 | 2 | Washer-Seal |
| 11 | 125-7193 | 2 | Gasket |

| Ref. | Part Number | Qty. | Description |
|---|---|---|---|
| 12 | 125-7212 | 2 | Bolt |
| 13 | 125-6971 | 1 | Elbow |
| 14 | 133-6769 | 1 | Pipe-L O Return T/C |
| 15 | 133-6666 | 1 | Gasket |
| 16 | 125-6958 | 1 | Hose |
| 17 | 125-7188 | 2 | Clamp-Hose |
| 18 | 125-7208 | 2 | Bolt |
| 19 | 133-6665 | 4 | Check Valve ASM |
| 25 | 133-6602 | 4 | Nozzle |
| 26 | 125-7182 | 4 | Pin-Spring |

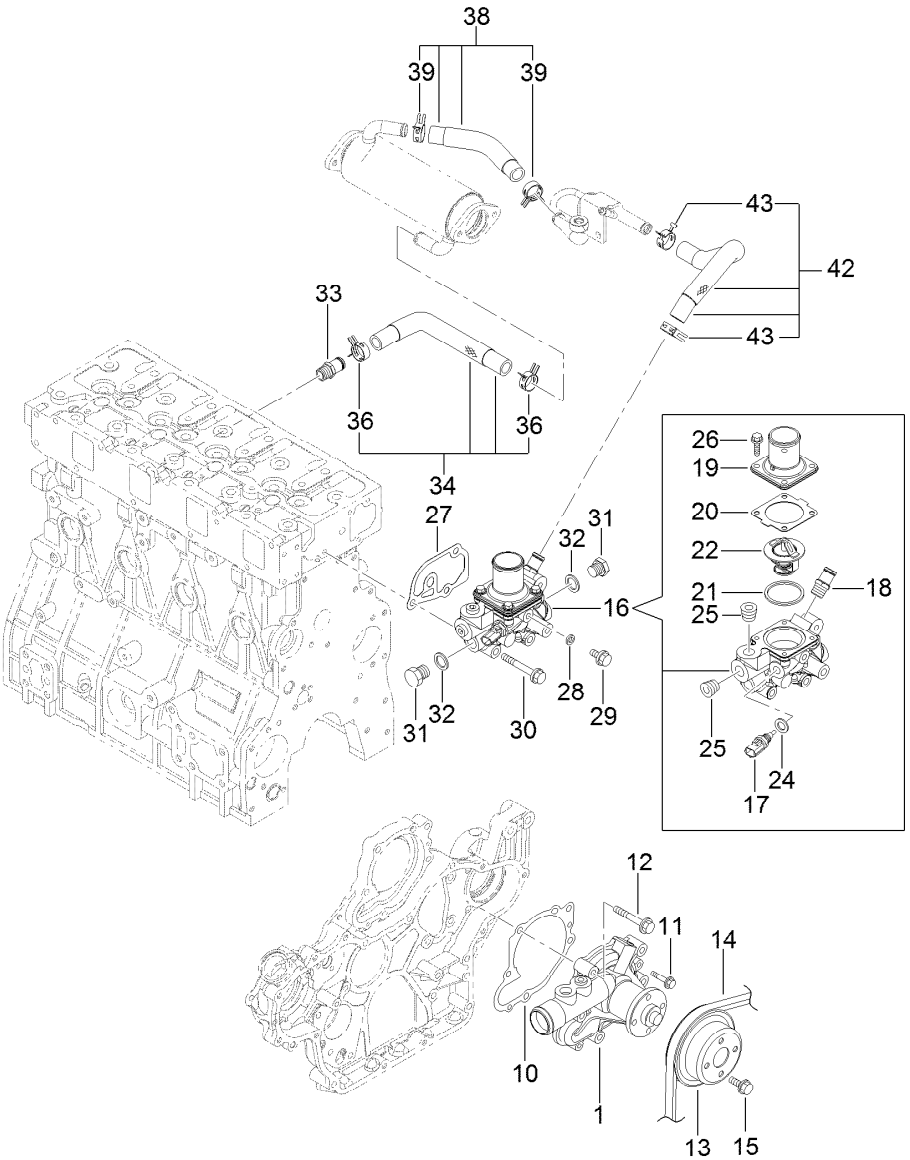


# Cooling Water System Assembly

| Ref. | Part Number | Qty. | Description |
|---|---|---|---|
| 1 | 133-6657 | 1 | Water Pump ASM |
| 10 | 133-6658 | 1 | Gasket-Pump, Water |
| 11 | 131-2739 | 2 | Bolt |
| 12 | 125-7221 | 5 | Bolt |
| 13 | 133-6659 | 1 | V Pulley-Pump, CW |
| 14 | 133-6799 | 1 | V-Belt |
| 15 | 133-2495 | 4 | Bolt |
| 16 | 133-6740 | 1 | Thermostat Case ASM |
| 17 | 125-7124 | 1 | Sensor-Thermostat, CW |
| 18 | 127-3017 | 1 | Joint |
| 19 | 133-6671 | 1 | Cover-Thermostat |
| 20 | 133-6613 | 1 | Gasket-Thermostat |
| 21 | 133-6614 | 1 | Gasket-Thermostat |
| 22 | 133-6615 | 1 | Thermostat |
| 24 | 125-7176 | 1 | Washer-Seal |

| Ref. | Part Number | Qty. | Description |
|---|---|---|---|
| 25 | 133-6796 | 2 | Plug |
| 26 | 125-7209 | 4 | Bolt |
| 27 | 133-6660 | 1 | Gasket |
| 28 | 125-7192 | 1 | Gasket |
| 29 | 125-7212 | 1 | Bolt |
| 30 | 125-7222 | 3 | Bolt |
| 31 | 125-6953 | 2 | Plug |
| 32 | 125-6979 | 2 | Gasket |
| 33 | 127-3017 | 1 | Joint |
| 34 | 133-6738 | 1 | E G R-C In Hose ASM |
| 36 | 127-3020 | 2 | Clip-Hose |
| 38 | 133-6739 | 1 | E G R-C Out A Hose ASM |
| 39 | 127-3020 | 2 | Clip-Hose |
| 42 | 133-6784 | 1 | E G R-C Out B Hose ASM |
| 43 | 127-3020 | 2 | Clip-Hose |

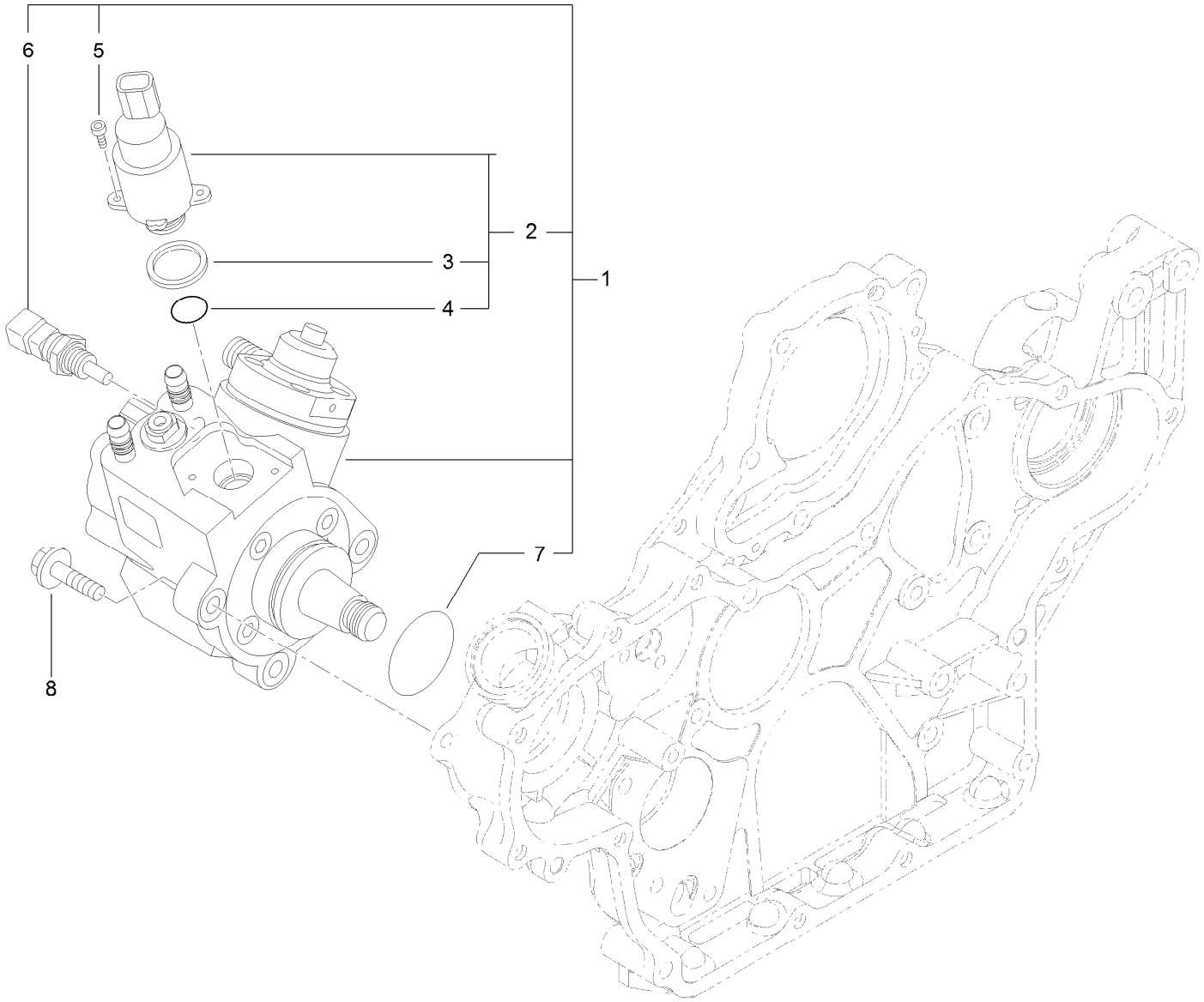


# Fuel Supply Pump Assembly

| *Ref.* | *Part Number* | *Qty.* | *Description* |
|---|---|---|---|
| 1 | 127-3073 | 1 | Fuel Pump ASM |
| 2 | 131-2103 | 1 | Valve ASM |
| 3 | 131-2105 | 1 | Ring-Sealing |
| 4 | 131-2106 | 1 | O-Ring |
| 5 | 131-2107 | 2 | Bolt |
| 6 | 131-2108 | 1 | Sensor-Temperature |
| 7 | 127-3074 | 1 | O-Ring |
| 8 | 125-7216 | 3 | Bolt |

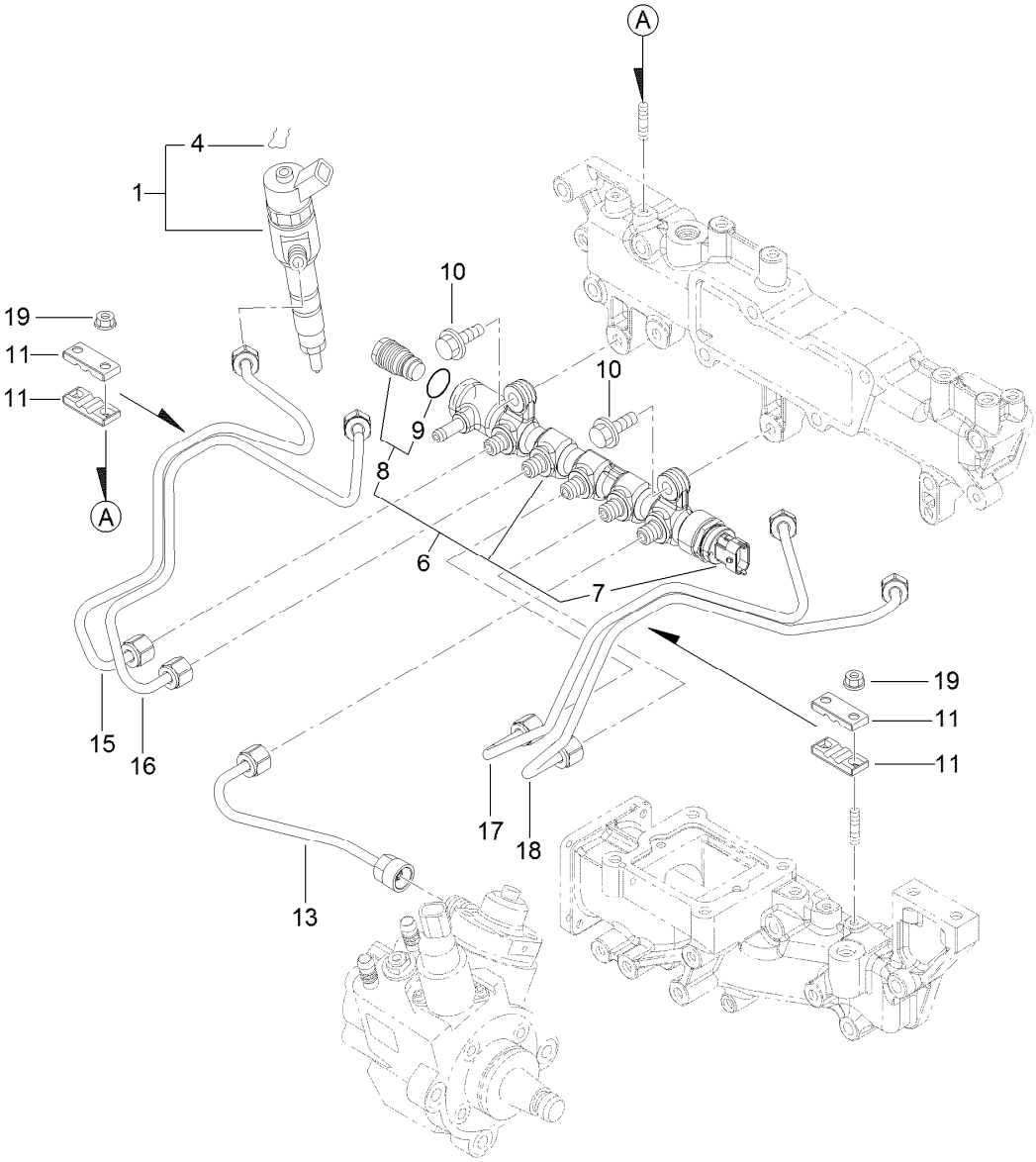


# Fuel Injection Valve Assembly

| Ref. | Part Number | Qty. | Description |
|---|---|---|---|
| 1 | 133-6770 | 4 | Injector-C R |
| 4 | 130-7430 | 4 | Ring-Retaining |
| 6 | 127-3118 | 1 | Rail ASM |
| 7 | 131-2709 | 1 | Sensor-Pressure, Rail |
| 8 | 131-2710 | 1 | Valve ASM |
| 9 | 130-7433 | 1 | O-Ring |
| 10 | 125-7215 | 2 | Bolt |
| 11 | 127-2982 | 4 | Retainer |
| 13 | 133-6745 | 1 | Rail Injector Pipe ASM |
| 15 | 133-6746 | 1 | Injector No 1 Pipe ASM |
| 16 | 133-6747 | 1 | Injector No 2 Pipe ASM |
| 17 | 133-6748 | 1 | Injector No 3 Pipe ASM |
| 18 | 133-6749 | 1 | Injector No 4 Pipe ASM |
| 19 | 125-7231 | 4 | Nut |

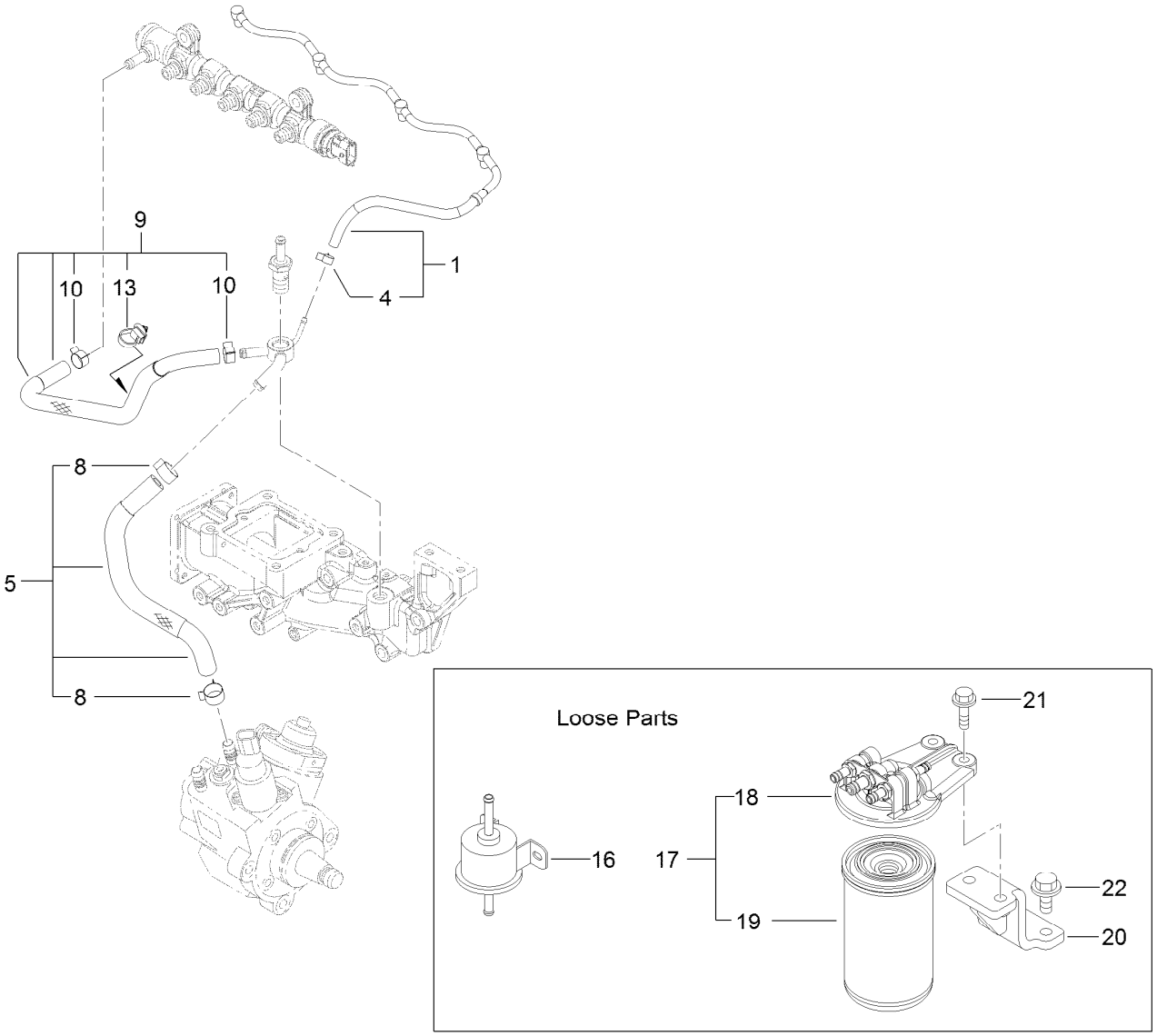


# Fuel Pipe Assembly

| Ref. | Part Number | Qty. | Description |
|---|---|---|---|
| 1 | 133-6744 | 1 | Fuel/Oil Return Pipe ASM |
| 4 | 127-3172 | 1 | Clamp-Hose |
| 5 | 133-6741 | 1 | Fuel/Oil Return Hose ASM |
| 8 | 125-7191 | 2 | Clamp-Hose |
| 9 | 133-6742 | 1 | Fuel/Oil Return Hose ASM |
| 10 | 127-2950 | 2 | Clip-Hose |
| 13 | 127-3087 | 1 | Band-Clip |
| 16 | 121-5613 | 1 | Pump-Fuel, Electric |
| 17 | 127-3075 | 1 | Fuel/Oil Filter ASM |
| 18 | 127-3076 | 1 | Fuel/Oil Filter Bracket ASM |
| 19 | 125-8752 | 1 | Filter-Fuel/Oil |
| 20 | 131-2731 | 1 | Bracket-Filter, Fuel |
| 21 | 125-7216 | 2 | Bolt |
| 22 | 133-2496 | 2 | Bolt |

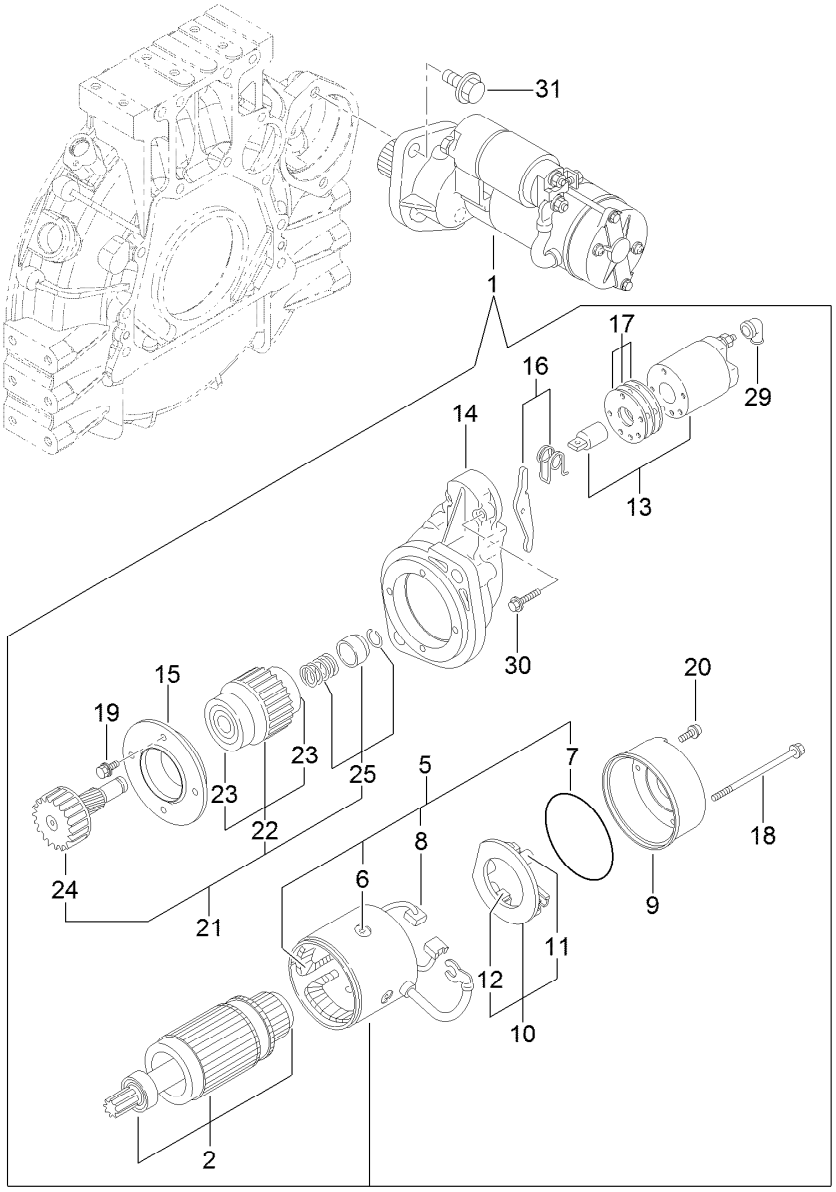


# Starter Motor Assembly

| Ref. | Part Number | Qty. | Description |
|---|---|---|---|
| 1 | 133-6673 | 1 | Starter |
| 2 | 133-6674 | 1 | Armature ASM |
| 5 | 133-6675 | 1 | Field Coil ASM |
| 6 | 133-6676 | 4 | Screw |
| 7 | 133-6677 | 1 | O-Ring |
| 8 | 133-6678 | 2 | Brush |
| 9 | 133-6679 | 1 | Cover |
| 10 | 133-6680 | 1 | Brush Holder ASM |
| 11 | 133-6681 | 1 | Spring |
| 12 | 133-6682 | 2 | Brush |
| 13 | 133-6683 | 1 | Switch ASM |
| 14 | 133-6684 | 1 | Case-Gear |
| 15 | 133-6685 | 1 | Retainer |

| Ref. | Part Number | Qty. | Description |
|---|---|---|---|
| 16 | 133-6686 | 1 | Lever Set |
| 17 | 133-6687 | 1 | Dust Cover ASM |
| 18 | 133-6688 | 2 | Bolt-Through |
| 19 | 133-6689 | 4 | Bolt |
| 20 | 133-6690 | 2 | Screw |
| 21 | 133-6616 | 1 | Pinion ASM |
| 22 | 133-6617 | 1 | Clutch ASM |
| 23 | 133-2510 | 2 | Bearing-Ball |
| 24 | 133-6618 | 1 | Shaft |
| 25 | 133-6604 | 1 | Stopper Kit |
| 29 | 133-6609 | 1 | Cover-Terminal |
| 30 | 133-6601 | 2 | Bolt |
| 31 | 125-7225 | 2 | Bolt |

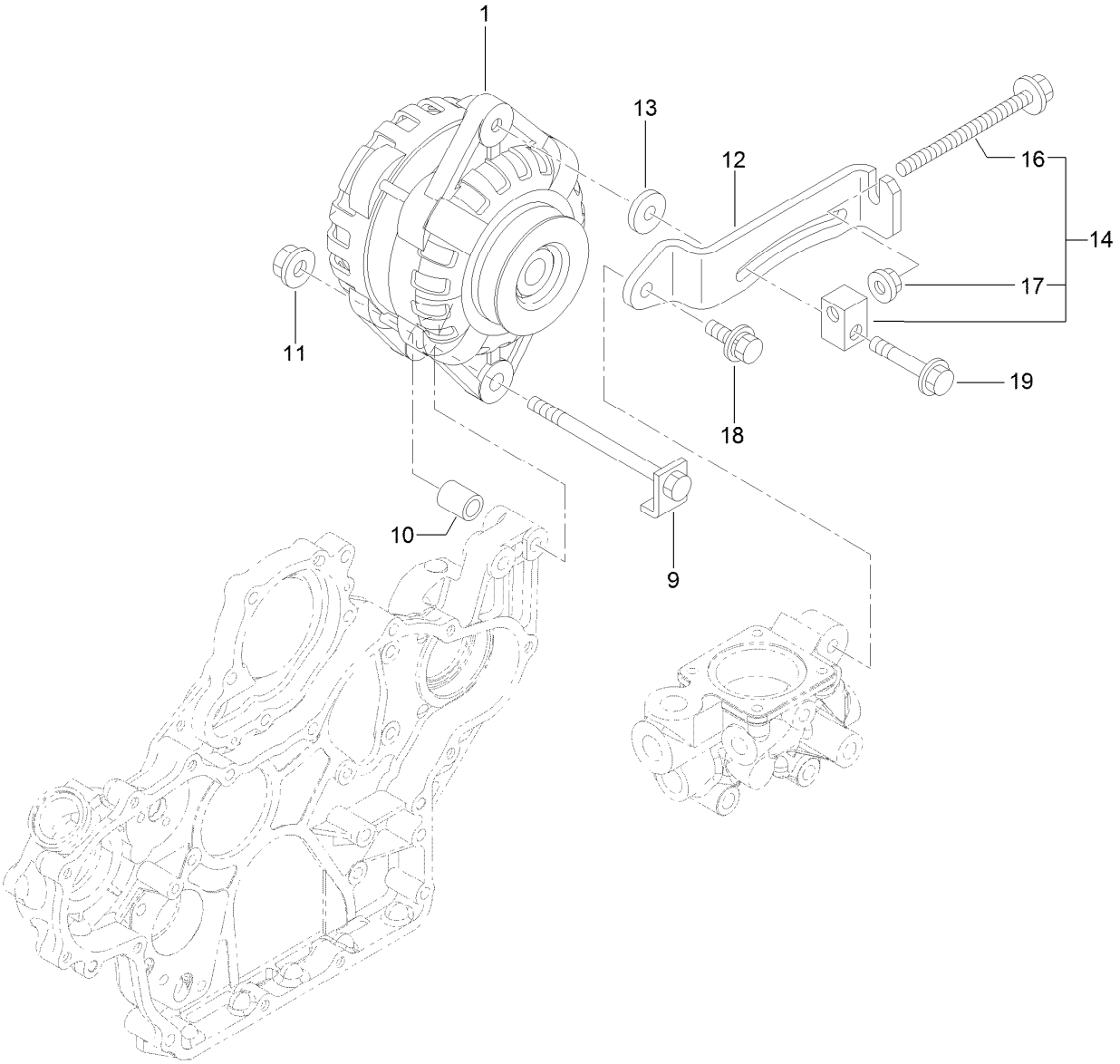


# Generator Assembly

| Ref. | Part Number | Qty. | Description |
|---|---|---|---|
| 1 | 125-7120 | 1 | Alternator-12V |
| 9 | 125-7121 | 1 | Bolt-Stopper |
| 10 | 125-7122 | 1 | Piece-Distance |
| 11 | 125-7230 | 1 | Nut |
| 12 | 133-6692 | 1 | Adjuster |
| 13 | 133-6608 | 1 | Spacer |
| 14 | 133-6605 | 1 | Adjuster Block ASM |
| 16 | 133-2494 | 1 | Bolt |
| 17 | 125-7229 | 1 | Nut |
| 18 | 133-2491 | 1 | Bolt |
| 19 | 125-7219 | 1 | Bolt |

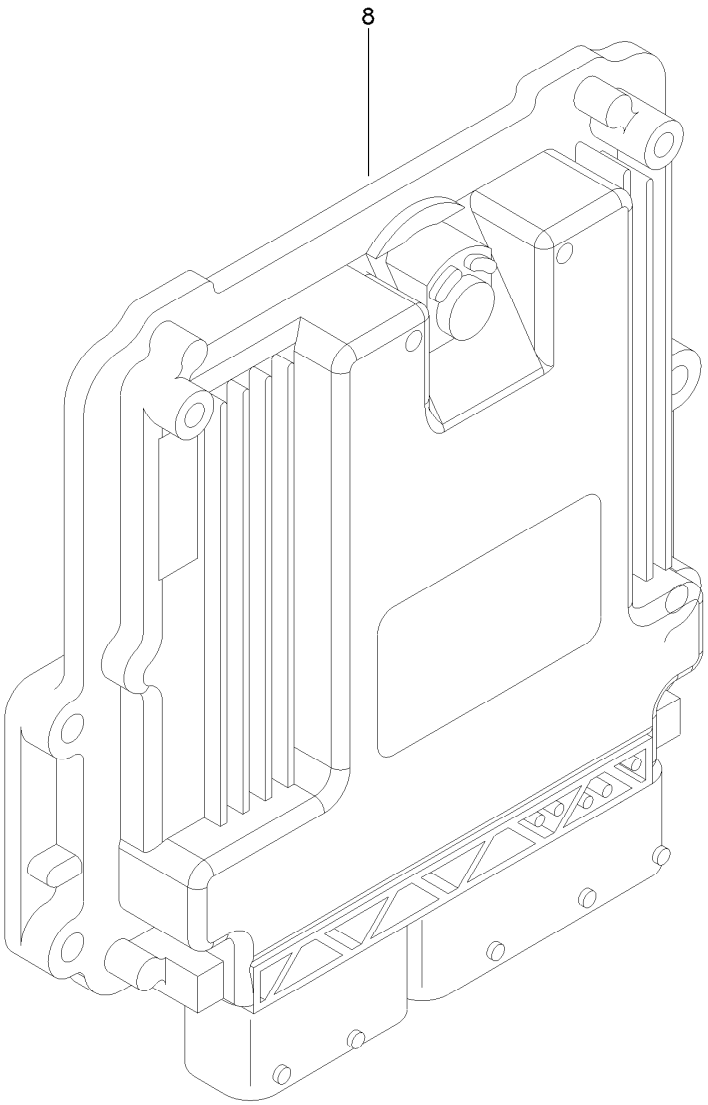


# Electronic Control Unit Assembly

| *Ref.* | *Part Number* | *Qty.* | *Description* |
|---|---|---|---|
| 8 | 121-5592 | 1 | Electronic Control Unit |

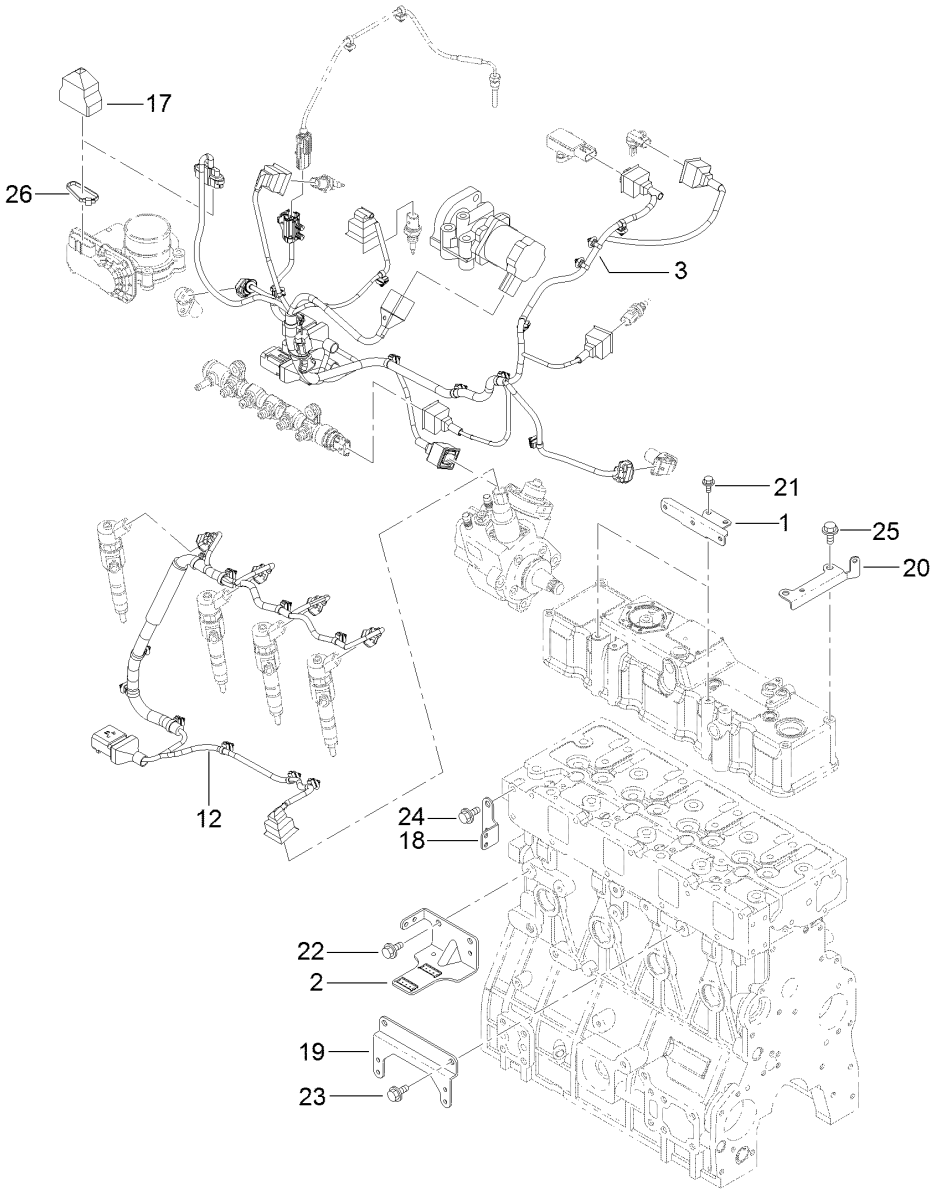


# Electric Parts Assembly

| Ref. | Part Number | Qty. | Description |
|---|---|---|---|
| 1 | 133-6706 | 2 | Bracket-Harness |
| 2 | 133-6751 | 1 | Bracket-Connector |
| 3 | 133-6771 | 1 | Harness-B, E C O |
| 12 | 133-6752 | 1 | Harness-C, E C O Engine |
| 17 | 131-2713 | 1 | Boot-Cap |
| 18 | 127-3090 | 1 | Bracket-Harness |
| 19 | 133-6753 | 1 | Bracket-Harness |
| 20 | 133-6772 | 1 | Bracket-Harness |
| 21 | 125-7206 | 4 | Bolt |
| 22 | 125-7212 | 2 | Bolt |
| 23 | 125-7212 | 2 | Bolt |
| 24 | 125-7212 | 2 | Bolt |
| 25 | 125-7212 | 2 | Bolt |
| 26 | 127-3188 | 1 | Band |

# Gasket Set

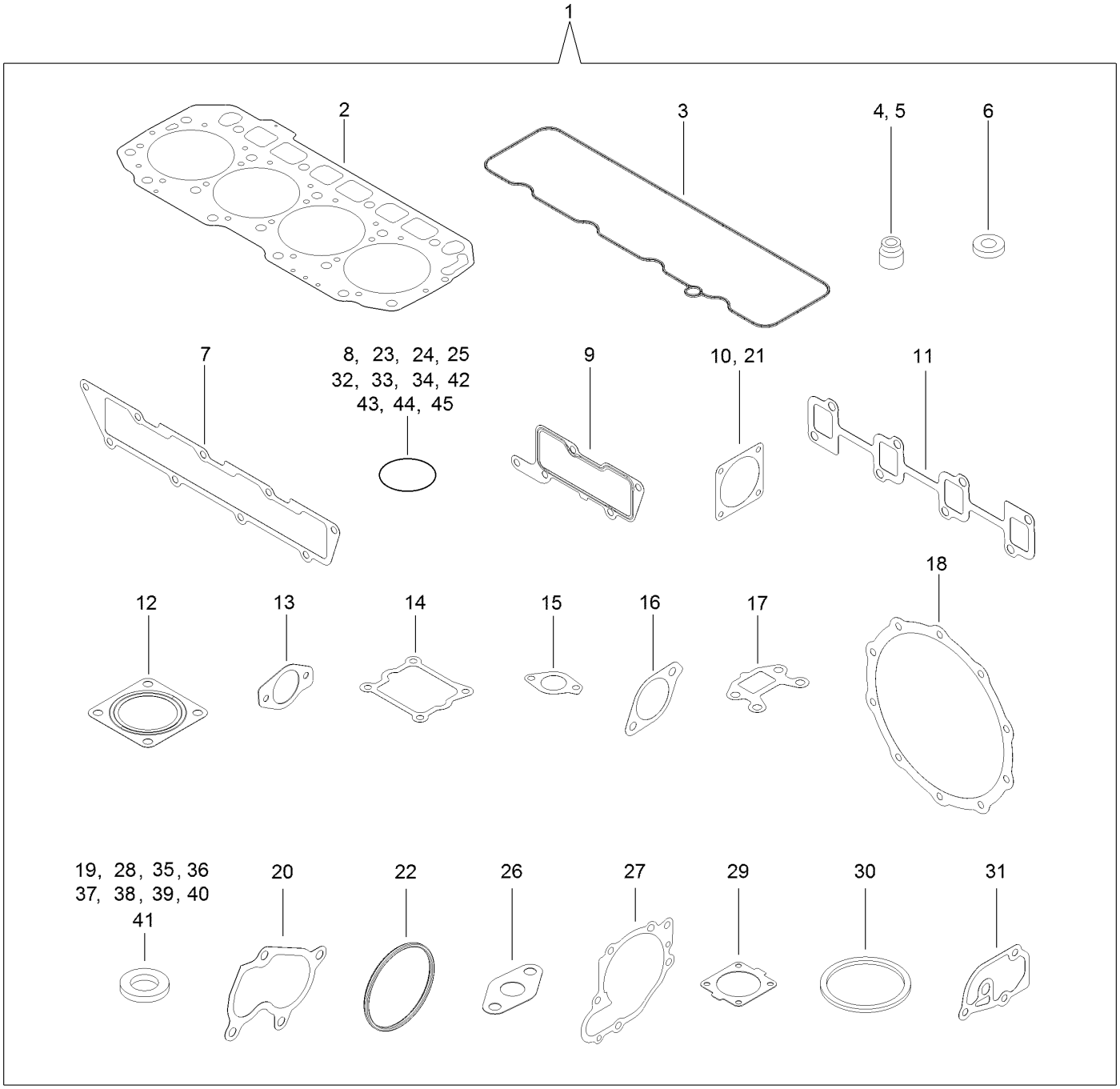
1
2
3
4, 5
6
7
8, 23, 24, 25
32, 33, 34, 42
43, 44, 45
9
10, 21
11
12
13
14
15
16
17
18
19, 28, 35, 36
37, 38, 39, 40
41
20
22
26
27
29
30
31

# Gasket Set (continued)

| Ref. | Part Number | Qty. | Description |
|---|---|---|---|
| 1 | 133-2509 | 1 | Gasket Kit |
| 2 | 133-6700 | 1 | Gasket-Head, Cylinder |
| 3 | 132-4907 | 1 | Gasket-Cover, Head |
| 4 | 127-2986 | 4 | Seal-Stem, Valve |
| 5 | 127-3027 | 4 | Seal-Stem, Valve |
| 6 | 127-3021 | 4 | Gasket-Injector |
| 7 | 133-6708 | 1 | Gasket-Manifold |
| 8 | 127-3033 | 1 | O-Ring |
| 9 | 133-6709 | 1 | Gasket-Collector |
| 10 | 127-3037 | 2 | Gasket-Throttle |
| 11 | 133-6710 | 1 | Gasket-Manifold |
| 12 | 127-2987 | 3 | Gasket-Silencer |
| 13 | 133-6698 | 2 | Gasket-Cooler, E G R |
| 14 | 133-6717 | 1 | Gasket-V Spacer, E G R |
| 15 | 127-3016 | 1 | Gasket |
| 16 | 133-6723 | 1 | Gasket-In, E G R-V |
| 17 | 133-6724 | 1 | Gasket-Out, E G R-V |
| 18 | 127-3162 | 2 | Gasket-D P F |
| 19 | 127-3056 | 4 | Gasket-Sensor |
| 20 | 133-6619 | 1 | Gasket |
| 21 | 133-6625 | 1 | Gasket |
| 22 | 133-6693 | 2 | Packing-Washer |
| 23 | 133-6653 | 2 | O-Ring |
| 24 | 133-6654 | 1 | O-Ring |
| 25 | 127-2985 | 1 | O-Ring |
| 26 | 133-6666 | 1 | Gasket |
| 27 | 133-6658 | 1 | Gasket-Pump, Water |
| 28 | 125-6979 | 2 | Gasket |
| 29 | 133-6613 | 1 | Gasket-Thermostat |
| 30 | 133-6614 | 1 | Gasket-Thermostat |
| 31 | 133-6660 | 1 | Gasket |
| 32 | 131-2106 | 1 | O-Ring |
| 33 | 127-3074 | 1 | O-Ring |
| 34 | 130-7433 | 1 | O-Ring |
| 35 | 125-7174 | 7 | Washer-Seal |
| 36 | 125-7176 | 1 | Washer-Seal |
| 37 | 127-3166 | 2 | Washer-Seal |
| 38 | 125-7177 | 1 | Washer-Seal |
| 39 | 125-7192 | 1 | Gasket |
| 40 | 125-7193 | 2 | Gasket |
| 41 | 127-3174 | 2 | Gasket |
| 42 | 93-0400 | 1 | O-Ring |
| 43 | 93-0418 | 3 | O-Ring |
| 44 | 125-7197 | 1 | O-Ring |
| 45 | 127-3176 | 1 | O-Ring |

# Attachments and Accessories

## For 31699 Groundsmaster 5910 Rotary Mower with Cab

| Product Name | Model/Part |
|---|---|
| Premium All Purpose Grease (Tube) | 108-1190 |
| Primary Engine Air Filter | 108-3815 |
| Backrest Extension Kit | 119-7719 |
| Premium Engine Oil 15w40 (55 Gallon Drum) | 121-6394 |
| Premium Engine Oil 15w40 (5 Gallon Pail) | 121-6395 |
| Air Filter | 121-8457 |
| Fuel/Water Separator Filter | 125-2915 |
| Engine Oil Filter | 125-7025 |
| Fuel Filter | 125-8752 |
| Safety Air Filter Element | 130-9070 |
| CE Kit, 2016 and After Groundsmaster 5900 Tier 4 Series Traction Unit | 132-1340 |
| Atomic Blade Service Pack (20in) | 132-1391 |
| Standard Blade Service Pack (20in) | 132-1392 |
| Blade/Belt Kit | 132-1440 |
| PX Hydraulic Fluid (5 Gal) | 133-8086 |
| PX Hydraulic Fluid (55 Gal) | 133-8087 |
| Wrench-Caster Cap/Latch | 138-6367 |
| Manual Flow Divider Kit | 140-5800 |
| Pre-Filter Screen Kit, 2015 and After Groundsmaster Series Cab | 30647 |
| EU Light Kit | 30653 |
| North American Cab Light Kit, 2015 and After Groundsmaster 5910/4010/4110 Series Traction Unit | 30706 |
| Beacon Kit, 2015 and After Groundsmaster Series Traction Unit | 31509 |
| Backup Alarm Kit | 31512 |
| LED Work Light Kit, 2015 and After Cab and 2 Post ROPS Extension Kit | 31596 |
| Center Deck | 31601 |
| Right Wing Deck | 31602 |
| Left Wing Deck | 31603 |
| Leaf Mulching Kit | 31604 |
| Fluid/Filter MVP Kit | 31609 |
| Auxiliary Braking System | 31701 |
| 1000 Hour MVP Kit | 44958 |
| Hydraulic Filter | 75-1310 |
| Hydraulic Filter | 86-6110 |
| 10in Foam Filled Castor Wheel | 93-5973 |

**Notes:**

TORO®

Count on it.