FORM NO. 92-3706

TORO®

MODEL NO. 41080-30001 & UP
MODEL NO. 41021-30001 & UP
MODEL NO. 41031-30001 & UP
MODEL NO. 41220-30001 & UP
MODEL NO. 41221-30001 & UP
MODEL NO. 41230-30001 & UP

OPERATOR'S MANUAL

PRO-CONTROL SPRAY SYSTEM

FOR THE WORKMAN® 3000 VEHICLE

To assure maximum safety, optimum performance, and to gain knowledge of the product, it is essential that you or any other operator of this Vehicle read and understand the contents of this manual before the engine is ever started. Pay particular attention to the SAFETY INSTRUCTIONS highlighted by this symbol —

The safety alert symbol means CAUTION, WARNING or DANGER — personal safety instruction. Failure to comply with the instruction may result in personal injury.

SAFETY INSTRUCTIONS

Keep this Operator's Manual in the plastic tube behind the operator seat.

It is very important that all persons operating this equipment have easy access to these instructions at all times!

Carefully read and follow the "set-up" instructions that are provided with this equipment and the Safety Instructions in the Workman Operator's Manual.

RECOGNIZE SAFETY INFORMATION

This safety-alert symbol is used to call attention to a **dangerous** situation, which could result in serious injury or death to the operator or a bystander.

Safety, mechanical and some general information in this manual are emphasized. **DANGER, WARNING** and **CAUTION** identify safety messages. Whenever the triangular safety symbol appears, it is followed by a safety message that must be read and understood. For more details concerning safety, read the Safety Instructions on pages 3 and 4. **IMPORTANT** identifies special mechanical information and **NOTE** identifies general information worthy of special attention.

These instructions are provided as a guide for the safe operation and maintenance of this equipment. However, the operator's personal safety, as well as those persons in the work area, will depend on the careful actions and good judgement of the operator. **To reduce the potential for injury or death, comply with the following safety instructions.**

BEFORE OPERATING:

1. Operate this machine only after reading and understanding the contents of this manual. A replacement manual is available by sending complete model and serial number to: The Toro Company, 8111 Lyndale Ave. South, Minneapolis, Minnesota 55420.

2. Learn how to operate the Sprayer and how to use the controls properly. DO NOT let anyone operate this equipment without first receiving thorough instructions.

3. Keep all shields, safety devices and decals in place. If a shield, safety device or decal is malfunctioning, illegible or damaged, repair or replace it before operating the machine.

4. Chemicals can injure persons, animals, plants, soils or other property. To eliminate environmental damage and personal injury:

A. Select the proper chemical for the job.

©The Toro Company-1993

SAFETY INSTRUCTIONS

B. Follow manufacturer's instructions on chemical container labels. Apply and handle chemicals as recommended.

C. Handle and apply chemicals with care. Wear goggles and other necessary protective equipment. Handle chemicals in well ventilated areas. Never smoke while handling chemicals.

D. Properly dispose of chemical container and unused chemicals.

WHILE OPERATING:

5. Drive the vehicle safely.

A. Always SLOW the vehicle when approaching and while making a turn.

B. Always SLOW the vehicle when driving in unfamiliar areas or over rough terrain.

C. Always SLOW the vehicle when changing the direction of travel or preparing to stop.

D. When turning or driving on slopes, always SLOW the vehicle, then turn the vehicle to prevent loss of control and possible upset.

E. DO NOT make sudden or sharp turns. DO NOT suddenly change direction of travel on an incline, ramp, grade, slope or similar surface.

F. Always adjust the vehicle speed to allow for existing conditions such as wet, slick surfaces, low visibility, etc.

G. Be especially careful when driving a heavily loaded vehicle down an incline or slope. Drive the vehicle UP and DOWN the face of the slopes, inclines or grades whenever possible. DO NOT DRIVE ACROSS the face if at all possible. There is a risk of upsetting the vehicle, which can result in serious injury or death.

6. DO NOT OVERLOAD THE VEHICLE. Failure to position loads carefully can result in their shifting or tipping over. Distribute loads evenly, keeping them as low as possible to prevent them from becoming top-heavy.

7. Make certain everyone is clear of the machine before starting the engine to move the vehicle or to engage the Sprayer Pump drive.

8. Before backing up, look to the rear and assure no one is behind. Back up slowly.

9. Watch out for traffic when near or crossing roads. Always yield the right of way to pedestrians and other vehicles.

10. If equipment begins to vibrate abnormally, stop **immediately**. Shut off the vehicle engine and disengage all power. Repair all damage before commencing operation.

MAINTENANCE:

11. Before servicing or making any adjustments to the Sprayer:

A. Stop the transport vehicle and set the parking brake.

B. Shut off the vehicle's engine and remove key from ignition.

C. Disengage all power and wait until all moving parts have stopped.

12. Keep all nuts, bolts and other fasteners tightened securely. Replace any shields removed during servicing or adjustments.

13. To be sure of optimum performance and safety, always purchase genuine TORO replacement parts and accessories. Replacement parts and accessories made by other manufacturers could be dangerous. Altering this equipment in any manner may affect the machine's operation, performance, durability or its use may result in injury or death. Such use could void the product warranty of the TORO Company.

SAFETY AND INSTRUCTION DECALS



(Part No. 36-3400) Top of Radiator Cover

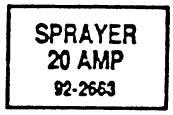

(Part No. 92-2663) Under dash below Fuse Block

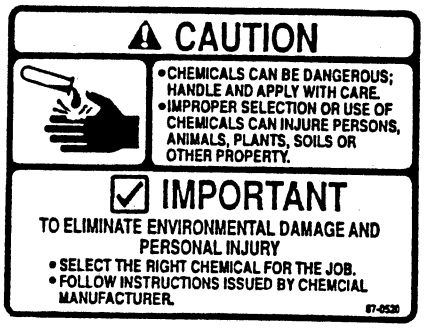

(Part No. 87-0520) On top of Tank Lid



(Part No. 87-0570) On rear Tank Band

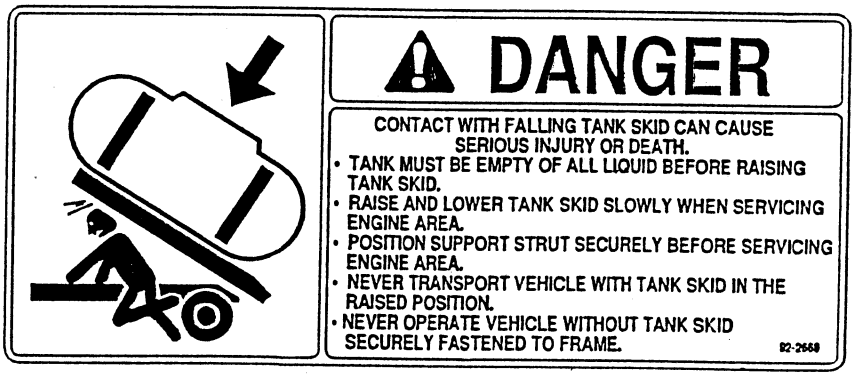

(Part No. 92-2669) On skid side rail next to Prop



(Part No. 75-5190) Top of Radiator Cover

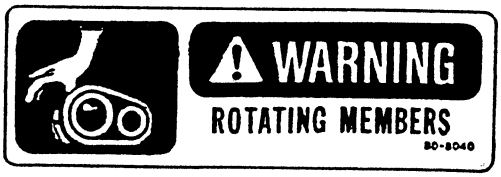

(Part No. 80-8040) Top of Radiator Cover

CONTROLS and OPERATION

NOTE: "Right","Left", "Front" & "Rear" are referenced while seated in the operator's position.

ELECTRIC CLUTCH/PUMP SWITCH (FIG 1): This switch located on the lower dash panel, when turned to the "ON" position, engages the pump drive belt. Turn the switch to the "OFF" position to disengage the pump drive belt.

CONSOLE COMPUTER (FIG 1): Receives data for desired rate of application and automatically maintains that rate, regardless of vehicle speed. See the "Raven SCS 440 Installation and Service Manual" for programming instructions.

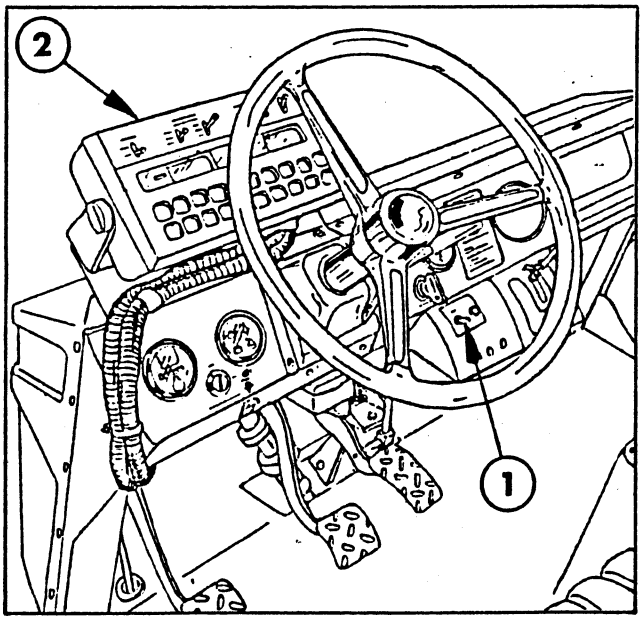

FIG. 1
1. Electrical Clutch/Pump Switch
2. Console Computer

JET AGITATOR VALVE HANDLE (FIG 2): Opens and closes the Agitator Valve to activate, adjust or stop the agitation of the spray solution in the Tank.

BY-PASS VALVE (FIG 2): Use to adjust and maintain the maximum pressure in the spraying system.

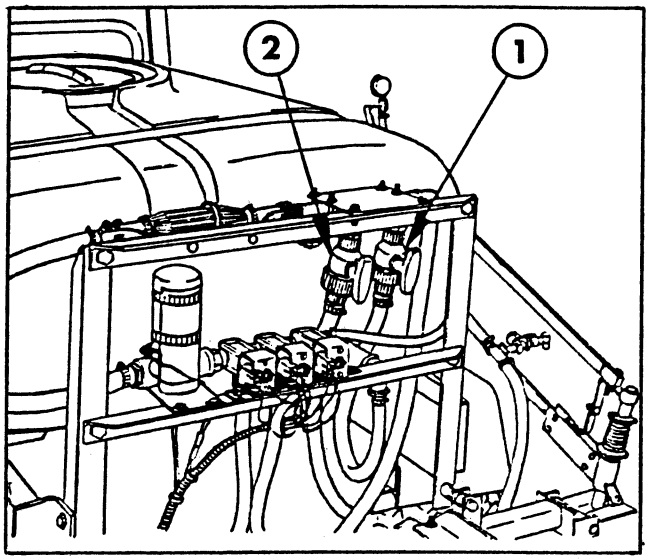

FIG. 2
1. Jet Agitator Valve Handle
2. By-Pass Valve

BEFORE OPERATION:
Check all of your equipment...make certain that all components are clean...including the Tank, Pump, Control Valves, Strainers, Check Valves, Hoses, Nozzles, Spray Tips and Suction Line Strainer.

NOZZLE SELECTION:
To achieve the desired application rate from your Sprayer (as indicated on the chemical container label) the proper capacity Nozzles must be installed.

To select the proper Nozzle, you need to know:

- Application rate in gallons per acre.
- The Sprayer speed in miles per hour.
- The nozzle spacing (standard spacing is 20 inches.)

Next, refer to the Nozzle Charts in the sprayer catalog provided, for selecting the proper size nozzles to deliver the correct application rate at a chosen speed within a desired pressure range.

OPERATION

PROGRAMMING OF CONSOLE COMPUTER:

Refer to the "Raven SCS 440 Installation and Service Manual" furnished with the PRO-CONTROL to familiarize yourself with the details of the Console and its calibration.

After all installation procedures have been completed and Console power is turned "ON", the Console will flash "CAL" in the RATE display. This means you must calibrate or program the Console before it can be operated. This is a one-time operation which does not have to be repeated unless the Console or Vehicle battery wires are disconnected...or the Vehicle battery is discharged.

After the battery wires have been reconnected, the Console will flash "CAL" in the RATE display and will have to be re-programmed as follows:

NOTE: Use the following calibration and programming instructions in conjunction with those found in the "Raven SCS 440 Installation and Service Manual". While the calibration figures shown below are useful guidelines, calculations should be carried out for your particular machine and refined to accommodate varying operating conditions and desired applications.

NOTE: Turning the POWER ON/OFF switch to "OFF" does not affect the Console memory. All data is retained.

SELECT APPLICATION MODE:

Position power switch to "ON". A flashing "CAL" will appear in the RATE window and "US" in the DATA window.

Depress "CE" momentarily to step from "US" (volume per acre) to "SI" (volume per hectare) to "TU" (volume per 1000 sq. ft.). Select application mode by depressing "ENTER" when desired code (US, SI or TU) is displayed. The DATA display will now read "SP 1".

SELECT SPEED SENSOR TYPE:

Depress "ENTER" when DATA display reads "SP 1". (wheel drive speed sensor) The DATA display will now read "O".

FOR DATA ENTRY:

(DATA MUST BE ENTERED INTO THE FIRST EIGHT KEYS). The following steps must now be followed.

1. Depress the key in which you wish to enter Data.

2. Depress the "ENTER" key. An "E" will illuminate in the DATA display.

3. Depress the keys required to enter the proper calibration number. The numbers will be displayed in the DATA display as they are entered.

4. Complete the entry by again depressing the "ENTER" key.

Continue initial programming of Console Computer as follows:

Keys 1,2,3 "BOOM CAL" - For the **TORO** Boom, having nozzles at 20" spacing, the Console should be programmed as follows: "Boom 1 (left)" - 80: "Boom 2 (center)" - 60: "Boom 3 (right)" - 80.

OPERATION

PROGRAMMING OF CONSOLE COMPUTER: (Cont'd.)

Key 4 "SPEED CAL" - Inflate front and rear tires to proper pressure as specified in the Workman Operator's Manual. Place chalk mark or tape on a rear tire and mark the initial spot on the ground. Drive vehicle straight ahead and measure 10 revolutions of the wheel in soil conditions similar to be sprayed and with the tank half full. Measure the distance traveled in inches and repeat this procedure 2-3 times and average the results. Your measurement should be approximate as follows:

23" Rear Tire (Standard) - 673"

24" Rear Tire (Optional) - 702"

After determining your measurement, take that number times the multiplier 1.025 (Example 673 x 1.025 = 690). Round off this new number to either the lowest or highest position from the decimal amount. Enter this number in inches under "SPEED CAL". **NOTE: This measurement is extremely critical! Use this number as a reference point only. Check tire pressures often and re-measure periodically.**

Key 5 "METER CAL" - The Flow meter calibration number is stamped on the yellow tag attached to each Flow Meter. Record this number in a safe place in case the tag is ever lost or disfigured.

Key 6 "VALVE CAL" - The four digits of the Control Valve calibration number control separate and significant functions. On the **TORO** PRO-CONTROL, program VALVE CAL initially, at 2611. You may wish to refine this number as experience and application dictate.

- 1st Digit (Valve Backlash) - Controls the time of the first correction pulse after a change in correction distance is detected. Range: 1-9. 1-short pulse; 9-long pulse.
- 2nd Digit (Valve Speed) - Controls the speed of the Control Valve motor. CAUTION: Running the valve too fast will cause the spray flow to pulsate. Range: 1-9. 1-Slow; 9-Fast.
- 3rd Digit (Brake Point) - Sets the point at which the Control Valve motor begins braking so as not to overshoot the target application rate. Digit is percent away from target rate. Range: 0-9. 0 = 5%, 1 = 10%, 9 = 90%.
- 4th Digit (Dead Band) - Set allowable difference between target and actual application rate. Range: 1-9. 1 = 1%, 9 = 9%.

Keys 7,8 "RATE 1 and RATE 2 CAL" - Determine application rates (GPA), (GAL/1000 SQ. FT.) or (lit/ha) you wish to apply and consult nozzle manual to be sure your spray nozzles have this capacity, at the vehicle speed you wish to travel. Enter values (with decimal point) in RATES 1 and 2. **NOTE:** RATE 2 should not differ more than 20% from RATE 1. If you do not use a second rate, enter the same rate in both RATE 1 and 2. **NOTE:** If using "TU" mode, enter RATE with two-place decimal, e.g. 1.55 gal. per 1000 sq. ft.

USEFUL FORMULAS

$$\text{G.P.M. (Per Nozzle)} = \frac{\text{G.P.A.} \times \text{M.P.H.} \times W^*}{5940}$$

$$\text{G.P.A.} = \frac{5940 \times \text{G.P.M. (Per Nozzle)}}{\text{M.P.H.} \times W^*}$$

W* - Nozzle spacing (in boom spraying) or spray swath (in boomless spraying)...in inches.

OPERATION

PROGRAMMING OF CONSOLE COMPUTER: (Cont'd.)

Key 9 "VOLUME TANK" (Optional) - Enter the amount of material in the Tank. This number must be re-entered each time the Tank is refilled. The function monitors Tank volume while spraying, based on application rate.

Key 0 "TIME" (Optional) - Enter time of day based on 24 hours. (i.e., 1:30 p.m. is 13:30), or enter "O" to measure elapsed time.

For further programming details and functions, preventive maintenance and troubleshooting guide, refer to the Raven SCS 440 Installation and Service Manual.

POWER DOWN DELAY FEATURE:
To conserve the Vehicle's 12-volt battery, the Power Down Delay should be set. In this "power down" mode, all data will be retained, but the time of day clock will not operate. The Power Down Delay is initially set at 10 days.

TO CHANGE DELAY TIME:

1. Depress "TIME" for 5 seconds and the current delay time will appear.

2. Reset the delay time by pressing "ENTER", the desired delay time (normally 1-2 days) and "ENTER".

INITIAL SYSTEM SET-UP:

1. Fill the Tank with water and open the Suction Line Valve.

IMPORTANT: The pump will be damaged if it is activated before it is completely filled with liquid. Be certain the suction line valve is open and liquid has reached the pump.

2. Take the vehicle out of gear and set the parking brake. Move Electric Clutch Switch to "OFF" position (refer to Workman Operator Manual). Start the engine and set the throttle at 3/4 to full RPM to represent your desired spraying speed. (AN ASSISTANT MAY BE NEEDED FOR THIS PROCEDURE).

3. Place MASTER ON/OFF to "ON" and BOOM ON/OFF switches to "OFF".

4. Place MAN/AUTO switch to "MAN".

5. Place POWER ON/OFF to "ON".

6. Verify that correct Boom widths and calibrations for Speed, Meter, Valve, Rate 1 and Rate 2 have been entered in Console.

7. Engage the pump by moving the clutch/pump engagement switch to the "ON" position.

8. Run Pump at normal operating RPM.

9. Verify that each Boom Solenoid Valve is operating and that no nozzles are plugged by operating.

10. Operate BOOM ON/OFF switches to verify that each Boom Solenoid Valve is operating and that there are no plugged nozzles.

11. Place all BOOM ON/OFF switches to "ON".

12. Hold the MAN.ADJ. switch in **INCR.** position for approximately 12 seconds. This assures that motorized Control Valve is fully **open.**

13. Note the maximum pressure shown on Pressure Gauge. Adjust with ball valve in By-Pass Line to 80 p.s.i. **max.**

14. Adjust ball valve in Agitator Line for desired agitation. Verify that maximum pressure is still present.

15. Hold the MAN.ADJ. switch in **DECR.** position for approximately 12 seconds. This assures that motorized Control Valve is fully **closed.**

16. Verify that minimum pressure can be achieved.

INITIAL SYSTEM FIELD TEST:

1. Drive Vehicle at desired spraying speed with Sprayer Booms off. Verify MPH readout on Console.

2. Engage the Spray Pump, place MASTER ON/OFF switch to "ON" and BOOM ON/OFF switches to "ON".

3. Place the RATE 1/RATE2/MAN switch to RATE 1.

4. Increase or decrease vehicle speed by one MPH. The system should automatically correct the target application rate.

If the system does not correct to the desired GPA, check for an empty Tank, a plugged line, a malfunctioning Pump, improper Vehicle speed or a defect in the system. First review the "INITIAL SYSTEM SET-UP".

If after eliminating the possibilities listed above the system is unable to correct the desired GPA, refer to the "Troubleshooting Guide" in the "Raven SCS 440 Installation and Service Manual".

5. At the end of each swath sprayed, switch the MASTER ON/OFF to "OFF" to shut off flow. This also shuts off the acreage totalizer.

6. Verify acres covered and gallons used.

FILLING THE SOLUTION TANK:

IMPORTANT: Do not add chemical to Tank until just before use. Follow the chemical manufacturer's instructions for mixing spray solution to obtain desired application rate and effect.

⚠ CAUTION

Chemicals can be hazardous! Read carefully the directions printed on the chemical manufacturer's labels before handling chemicals. Instructions on chemical manufacturer's container labels, regarding mixing proportions, should be read and strictly followed. The concentrate should not be poured into an empty Tank: fill Tank about one-half full with clean, clear water, add chemical concentrate and finish filling Tank with water.

Keep spray material from skin. If spray material comes in contact with body, wash it off immediately with clean water and detergent.

Always wear goggles and other protective equipment as recommended by the Chemical Manufacturer.

OPERATION

FILLING THE SOLUTION TANK:

1. Most chemicals are heavier than the water to which they are introduced.
2. Fill the spray tank 1/2 full with clear water from a clean source.
3. Start vehicle and turn on pump with booms off and by-pass fully open.
4. Begin adding the chemicals very gradually, allowing the pump and agitation to fully mix the chemicals.
5. Fill the remainder of the tank with clear water.
6. After the chemicals are thoroughly mixed, begin closing off by-pass to the desired system pressure.

USING THE SPRAYER:

IMPORTANT: Do not operate pump dry. Damage will result to the pump seals if the pump is operated dry. Be certain the Suction Line Valve is "OPEN" before engaging the pump.

1. Operate the vehicle engine at full throttle to give the necessary pressure and volume.
2. Do not overlap areas that have been sprayed.
3. Watch for plugged nozzles.
4. Stop the spray flow before stopping the Vehicle.

MAINTENANCE

Flush the entire spraying system with clear water after each use. Failure to clean the system can result in a chemical residue which can plug the Flow Meter, Solenoids, Control Valve, Hoses and/or Nozzle Tips, and seriously damage the Centrifugal Pump.

Wash spray tips thoroughly with water. Blow out orifice, clean and dry. If orifice remains clogged, clean it with a soft bristled brush...never use a metal object.

SUCTION STRAINER:

Turn off Suction Line Valve if Tank is full of spray solution. Remove the cap and clean the strainer screen when spraying wettable powders - after every 50 hours when using liquid chemical.

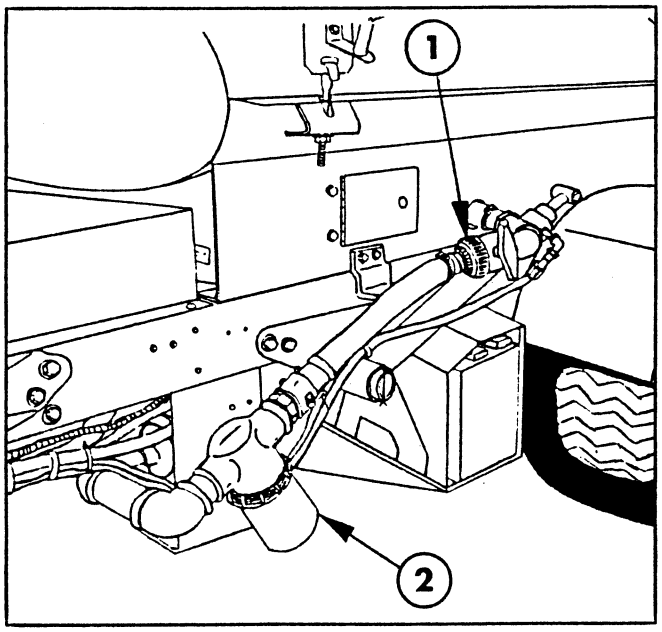

FIG. 3

1. Suction Line Valve
2. Suction Strainer

IMPORTANT: Do not operate the pump dry! Be certain Suction Line Valve is opened when spraying is resumed. Damage to Spray Pump will result when operating the Sprayer with Valve closed.

FLOW METER

See the "Preventive Maintenance" section in the manual supplied for detailed instructions regarding the preventive maintenance, adjustment and calibration of the Flowmeter.

Preventive maintenance will pay off many times over in peak performance and efficient operation.

⚠ WARNING!

Before servicing or making any adjustments to the Sprayer, stop the transport vehicle and set the parking brake. Shut off the vehicle's engine and remove key from ignition. Disengage all power and wait until all moving parts have stopped.

MAINTENANCE

SEAL PROBLEM TROUBLESHOOTING

Trouble	Probable Cause	Remedy
1. Cracked or broken stationary seat (Ceramic)	Seal ran dry and heated up. When liquid reached seal faces was cooler, causing thermal cracks.	Check to insure seal chamber is full of liquid before starting pump. On high temperature application insure proper flushing at seal faces.
2. Carbon washer scored grooved.	Dirty System.	Have system cleaned and flushed and consider and consider installation of abrasive separator.
3. Carbon washer worn unevenly.	Seal improperly installed.	Check installation instructions for proper assembly.
4. Rubber bellows of seal are hard and brittle Rapid carbon wear.	Did pump run dry or cavitate.	Check to insure seal chamber is full of liquid before starting pump.
5. Retainer drive tabs badly worn or broken.	Periodic loss of lubrication at seal faces.	Insure proper flushing at seal faces.
6. Flexible bellows broken.	Seal improperly installed.	Check installation instructions for proper assembly.
7. Seal wears out shaft.	Check bearings for shaft end play. Check bearings for shaft radial movement. Check shaft straightness.	Replace bearings. Replace shaft.

MAINTENANCE

PROCEDURES FOR REPLACING THE SHAFT BEARINGS AND SEAL IN THE TORO CENTRIFUGAL SPRAYER PUMP

To service the bearings (12), take the volute (1) and the impeller (7) off the shaft (10). The impeller (7) is held on the shaft (10) by a cap screw (3) in the end of the shaft and there is a key (8) to prevent it from spinning. Then take the rear housing lockring (13) out of the housing. Push the shaft (10) out and take the bearings (12) off the shaft. Be sure the shaft lockrings (11) are not crushed or broken. Press the new bearings (12) on the shaft, being careful to press against the inner raceway, so as not to damage them. You are now ready to reassemble the pump.

To service the seal (6) take the volute (1) off the housing (9). Take the capscrew (3) out of the end of the shaft (10). Pull the impeller (7) off the shaft, then carefully remove the old seal head and seat, taking care not to scratch the shaft or seal counterbore.

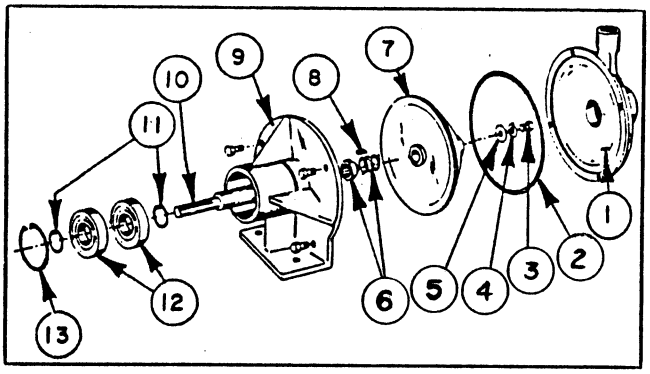

FIG. 4

1. Volute
2. O-Ring
3. Cap Screw
4. Lock Washer
5. Flat Washer
6. Shaft Seal
7. Impeller
8. Square Key
9. Housing
10. Shaft
11. Lock Ring
12. Bearing
13. Lock Ring

Clean the shaft and counterbore surfaces using fine steel wool. If there is any pitting or roughness within 1-3/8" of the end of the shaft, the shaft should be replaced.

Lightly grease the seal counterbore and hand press the new seat into this cavity. Replace the shaft into the frame, and secure with lockrings.

To replace the seal head, a piece of pipe or tubing should be used that will fit over the 3/4" diameter portion of the shaft. It is very important that this piece of tubing have an inside diameter of no larger than 13/16".

After lightly oiling the shaft, start the seal head by hand. Now using the tubing, push the seal down the shaft until the carbon face contacts the ceramic face. It is important that the two faces be completely clean and grease free. SEAL SURFACES SHOULD NOT BE LUBRICATED!

By pushing against the small diameter ring on the seal head; as you have done, you should not have any problems. However, if you push the seal head down the shaft by the large diameter portion, you may separate the seal and split the bellows. This will make the seal leak immediately.

You are now ready to reassemble the remaining components of the pump according to the parts diagram. With proper care this pump will give you many years of service.

MAINTENANCE

TROUBLESHOOTING THE 42877 CONTROL VALVE

CONDITION	POSSIBLE CAUSES	HOW TO CHECK
1. Valve won't open	A. No electrical power to valve	Manually activate valve. If stem moves freely, check and clean electrical connections. Inspect electrical system.
	B. Stroke too long	Energize coil. Check length of stroke - should be approximately 1/8". If not, reset stroke.
	C. Stem movement restricted	Manually activate stem by pushing on lower diaphragm piston. If more than 5 lbs. of force is required to move stem, disassemble valve, inspect and clean all parts.
2. Valve won't shut off	A. Spring malfunction	Manually activate stem. Stem should offer 2-6 lbs. resistance, but movement should be quick and smooth. If there is very little resistance, disassemble and check spring.
	B. Stem movement restricted	Manually activate stem by pushing on lower diaphragm piston. If more than 5 lbs. of force is required to move stem, disassemble valve, inspect and clean all parts. Replace any damaged or worn parts with new ones.
	C. Seat washer blown out of retainer due to excessive pressure	Remove stem from valve body and inspect condition of seat washer.
	D. Seat washer worn or damaged	Replace seat washer.
3. Leakage around coil or around lower diaphragm piston.	A. Ruptured diaphragms	Disassemble valve and replace diaphragms with new ones.
4. Blowing fuses	A. Short circuit in power	Inspect wires for worn insulation and check connections.
	B. Short within the coil	Remove connections from coil and activate switch, making sure connections don't touch. If fuse doesn't blow, replace coil.
5. Valve operating properly, but pressure drop too high.	A. Not getting full stroke	Energize coil. Check length of stroke - should be approximately 1/8". If not, remove coil and check for obstructions between armature and armature stop. If clean, reset stroke.
	B. Obstruction in valve body	Remove inlet and outlet connections and inspect body.

STORAGE

Flush the entire spraying system with clear water. Drain the entire spraying system thoroughly, and run some antifreeze through the entire spraying system. This will act as a lubricant and prevent freeze-ups in the system components. FREEZING TEMPERATURES MAY DAMAGE THE FLOWMETER, THE MOTORIZED CONTROL VALVE, AND THE ELECTRIC SOLENOIDS IF THE WATER IS NOT DRAINED COMPLETELY!

Remove and clean the Flow Meter at the end of each spraying season. Refer to the "Preventive Maintenance" section in the manual provided for detailed instructions.

Should the Raven console require service, refer to the serial number decal on the bottom of the console when requesting assistance or information from your **TORO** distributor.

SERVICING AFTER STORAGE:

Flush the entire spraying system with clean water and detergent.

Flush the entire spraying system again with clean, clear water to rinse.

Drain entire spraying system.

STORAGE AND DISPOSAL OF CHEMICALS:

Follow chemical manufacturer's recommendations for storage and disposal of chemicals.

FINDING THE CORRECT NOZZLE SIZE

$$\text{G.P.M. (Per Nozzle)} = \frac{\text{G.P.A.} \times \text{M.P.H.} \times W^*}{5940}$$

Example: .81 GPM = $\frac{80 \text{ GPA} \times 3 \text{ MPH} \times 20"}{5940}$

*W = Nozzle spacing in inches.

TORO Part No.	Nozzle Number Color–Code	Pressure (PSIG)	Capacity 1–Nozzle (GPM)	APPLICATION RATES FOR NOZZLES 20" SPACING							
				GALLONS PER ACRE				GALLONS PER 1000 SQ. FT.			
				3 MPH	4 MPH	5 MPH	6 MPH	3 MPH	4 MPH	5 MPH	6 MPH
43082	RA–5	20	.36	35	26	21	17.5	.80	.60	.48	.40
	120°	30	.44	42	32	26	21	.96	.73	.60	.48
	¼"	40	.50	50	37	30	25	1.15	.85	.69	.57
	Dk. Blue	50	.56	56	42	33	28	1.29	.96	.76	.64
41088	RA–6	20	.43	42	32	25	21	.96	.73	.57	.48
	120°	30	.52	52	39	31	26	1.19	.90	.71	.60
	¼"	40	.60	60	45	36	30	1.38	1.03	.83	.69
	Dk. Green	50	.67	66	50	40	33	1.52	1.15	.92	.76
42828	RA–8	20	.57	56	42	34	28	1.29	.96	.78	.64
	120°	30	.70	68	51	41	34	1.56	1.17	.94	.78
	¼"	40	.80	80	59	48	40	1.84	1.35	1.10	.92
	Red	50	.90	88	66	53	44	2.02	1.52	1.22	1.01
40444	RA–10	20	.71	70	53	42	35	1.61	1.22	.96	.80
	120°	30	.87	86	64	51	43	1.97	1.47	1.17	.99
	¼"	40	1.0	100	74	59	50	2.30	1.70	1.35	1.15
	Tan	50	1.1	110	83	66	55	2.53	1.91	1.52	1.26
92–0027	RA–15	20	1.1	106	79	63	53	2.43	1.81	1.45	1.22
	120°	30	1.3	128	96	77	64	2.94	2.20	1.77	1.47
	¼"	40	1.5	148	111	89	74	3.40	2.55	2.04	1.70
	Lt. Blue	50	1.7	166	125	100	83	3.81	2.87	2.30	1.91

CHECKING YOUR CALIBRATION

$$\text{G.P.A.} = \frac{5940 \times \text{G.P.M. (Per Nozzle)}}{\text{M.P.H.} \times W^*}$$

Example: 79.2 GPA $= \frac{5940 \times .80 \text{ GPM}}{3 \text{ MPH} \times 20"}$

*W = Nozzle spacing in inches.

Conversion from Gallons/Acre to Gallons/1000 Sq. Ft.
GPA ÷ 43.56 = Gallons per 1000 sq. ft.

The Toro Promise

A One Year Limited Warranty

The Toro Company promises to repair your Pro-Control Spray System for the Workman vehicle (comprising of models 41021, 41080, 41220, 41221, 41222) if defective in materials or workmanship. The following time periods from the date of purchase apply (special warranty terms, on certain components, may be offered through The Toro Company by the component manufacturers):

Commercial Products ..... 1 Year

The cost of parts, labor and transportation are included.

If you feel your TORO Product is defective and wish to rely on The Toro Promise, the following procedure is recommended:

1. Contact your Authorized TORO Distributor or Commercial Dealer (the Yellow Pages of your telephone directory is a good reference source).

2. The TORO Distributor or Commercial Dealer will advise you on the arrangements that can be made to inspect and repair your product.

3. The TORO Distributor or Commercial Dealer will inspect the product and advise you whether the product is defective and, if so, make all repairs necessary to correct the defect without an extra charge to you.

If for any reason you are dissatisfied with the distributor's analysis of the defect or the service performed, you may contact us.

Write:

TORO Commercial Products Service Department
8111 Lyndale Avenue South
Bloomington, MN 55420–1196

The above remedy of product defects through repair by an Authorized TORO Distributor or Commercial Dealer is the purchaser's sole remedy for any defect.

THERE IS NO OTHER EXPRESS WARRANTY. ALL IMPLIED WARRANTIES OF MERCHANTIBILITY AND FITNESS FOR USE ARE LIMITED TO THE DURATION OF THE EXPRESS WARRANTY.

Some states do not allow limitations on how long an implied warranty lasts, so the above limitation may not apply to you.

This Warranty applies only to parts or components which are defective and does not cover repairs necessary due to normal wear, misuse, accidents, or lack of proper maintenance. Regular, routine maintenance of the unit to keep it in proper operating condition is the responsibility of the owner.

All warranty repairs reimbursable under The Toro Promise must be performed by an Authorized Toro Commercial Dealer or Distributor using Toro approved replacement parts.

Repairs or attempted repairs by anyone other than an Authorized TORO Distributor or Commercial Dealer are not reimbursable under the TORO Promise. In addition, these unauthorized repair attempts may result in additional malfunctions, the correction of which is not covered by warranty.

THE TORO COMPANY IS NOT LIABLE FOR INDIRECT, INCIDENTAL OR CONSEQUENTIAL DAMAGES IN CONNECTION WITH THE USE OF THE PRODUCT INCLUDING ANY COST OR EXPENSE OF PROVIDING SUBSTITUTE EQUIPMENT OR SERVICE DURING PERIODS OF MALFUNCTION OR NON–USE.

Some states do not allow the exclusion of incidental or consequential damages, so the above exclusion may not apply to you.

This warranty gives you specific legal rights, and you may also have other rights which vary from state to state.

COUNTRIES OTHER THAN THE UNITED STATES OR CANADA

Customers who have purchased TORO products exported from the United States or Canada should contact their TORO Distributor (Dealer) to obtain guarantee policies for your country, province, or state. If for any reason you are dissatisfied with your Distributor's service or have difficulty obtaining guarantee information, contact the TORO importer. If all other remedies fail, you may contact us at The Toro Company.

Compliance with Radio Interference Regulations Certified.