FORM NO. 92-8239

TORO®

MODEL NO. 41420-40001 & UP

OPERATOR'S MANUAL

TOPDRESSER 5000

To assure maximum safety, optimum performance, and to gain knowledge of the product, it is essential that you or any other operator of this equipment read and understand the contents of this manual before the Topdresser is operated. Pay particular attention to the SAFETY INSTRUCTIONS highlighted by this symbol—

The safety alert symbol means CAUTION, WARNING, or DANGER — personal safety instruction. Failure to comply with the instruction may result in personal injury.

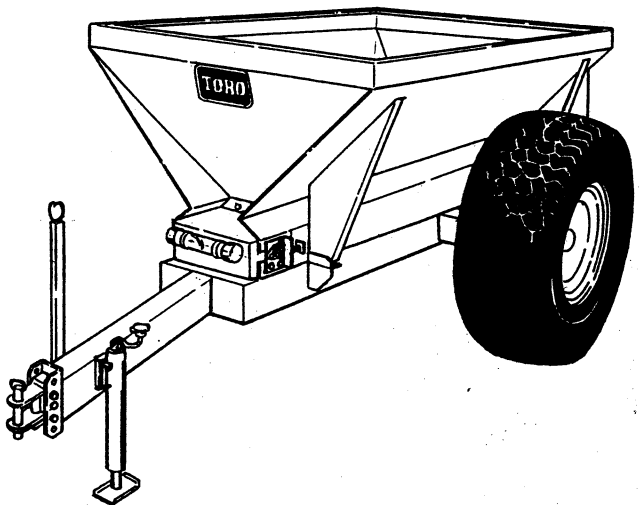

WARNING

The engine exhaust from this product contains chemicals known to the State of California to cause cancer, birth defects, or other reproductive harm.

SAFETY INSTRUCTIONS

Keep this Operator's Manual in the plastic tube on the front of the Hopper.

It is very important that all persons operating this equipment have easy access to these instructions at all times.

Carefully read and follow the Installation Instructions that are provided with this equipment.

Connecting the Wiring Harness to the Control Box as described in the "WIRING HARNESS CONNECTION" (page 5) provides power to the electric brakes and controls. Proper connection of the Wiring Harness is a requirement for safe operation.

These instructions are provided as a guide for the safe operation and maintenance of this equipment. However, the operator's personal safety, as well as those persons in the work area, will depend on the careful actions and good judgement of the operator.

This safety-alert symbol is used to call attention to a **dangerous** situation, which could result in serious injury or death to the operator or a bystander.

Safety, mechanical and some general information in this manual are emphasized. **DANGER, WARNING,** and **CAUTION** identify safety messages. Whenever the triangular safety symbol appears, it is followed by a safety message that must be read and understood. For more details concerning safety, read the Safety Instructions that follow. **IMPORTANT** identifies special mechanical information and **NOTE** identifies general information worthy of special attention.

©The Toro Company-1994
All Rights Reserved

SAFETY INSTRUCTIONS

This Topdresser was designed and tested to offer safe service when operated and maintained properly. Although hazard control and accident prevention partially are dependent upon the design and configuration of the machine, these factors are also dependent upon the awareness, concern, and proper training of the personnel involved in the operation, maintenance and storage of the machine. Improper use or maintenance of the machine can result in injury or death.

This Topdresser is specifically designed to be towed by a Tractor which meets the following minimum requirements:

A. 35 P.T.O. horsepower
B. Tractor weight, 3,500 lbs.
C. Drawbar capacity, 850 lbs.

> **⚠ WARNING**
>
> **Using an undersized Tractor can result in serious injury or death due to loss of control!**

The maximum hopper capacity is 4,500 pounds (6,500 pounds gross vehicle weight). A 4,500 pound pay load is approximately a Hopper level full with dry sand. Never heap the Hopper or exceed the 4,500 lb. capacity.

Topdressing materials can vary greatly in density. It is recommended that the operator weigh the Topdresser with typical material and adjust the level accordingly.

TO REDUCE THE POTENTIAL FOR INJURY OR DEATH, COMPLY WITH THE FOLLOWING SAFETY INSTRUCTIONS.

SUPERVISOR'S RESPONSIBILITIES

1. Make sure operators are thoroughly trained and familiar with the towing Tractor's Operator's Manual, the Topdresser's Operator's Manual and all labels on the Tractor and Topdresser.

2. Be sure to establish your own special procedures and work rules for unusual operating conditions (e.g. slopes too steep for vehicle operation).

BEFORE OPERATING

3. Refer to your Tractor's Operator's Manual for safety instructions regarding the recommended towing practices, precautions and restrictions.

4. Operate the machine only after reading and understanding the contents of this manual. A replacement manual is available by sending complete model and serial number to: **Hahn Equipment Co.**, A subsidiary of The TORO Company, 1625 N. Garvin Street, Evansville, IN 47711-4596.

5. Read and understand the Engine Manufacturer's Operator's Manual. Follow the safety alert messages.

6. Only trained and authorized persons should operate this Topdresser. Make sure all operators are physically and mentally capable of operating the Topdresser.

7. Never operate the Topdresser when under the influence of drugs or alcohol.

8. Become familiar with the controls and know how to stop the engine quickly.

9. Keep all shields, safety devices and decals in place. If a shield, safety device or decal is malfunctioning, illegible, or damaged, repair or replace it before operating the machine.

10. Do not wear loose fitting clothing or jewelry which could get caught in moving parts and cause personal injury.

11. Wearing safety glasses, safety shoes, long pants and a helmet is advisable and required by some local safety and insurance regulations.

12. Keep everyone, especially children and pets away from the areas of operation.

13. Before operating the Topdresser, always check all parts of the machine. If something is wrong, stop using the machine **immediately**. Make sure problem is corrected before the Topdresser is operated again.

14. Since gasoline is highly flammable, handle it carefully.

A. Use an approved gasoline container.

B. Do not remove cap from fuel tank when engine is hot or running.

C. Do not smoke while handling gasoline.

D. Fill fuel tank outdoors and to about one inch below top of tank, (bottom of filler neck). Do not overfill.

E. Wipe up any spilled gasoline.

⚠ SAFETY INSTRUCTIONS

WHILE OPERATING

WARNING: Engine exhaust contains carbon monoxide which is an odorless, deadly poison. Carbon monoxide is also known to the State of California to cause birth defects. Do not run engine indoors or in an enclosed area.

15. Towing the Topdresser demands attention. Failure to operate the towing Tractor safely may result in an accident, tip over of vehicle and serious injury or death. Drive carefully. To prevent tipping or loss of control:

A. Use extreme caution, reduce speed and maintain a safe distance around sand traps, ditches, creeks, ramps and any unfamiliar areas or other hazards.

B. Watch for holes or other hidden hazards.

C. When loading the Topdresser,distribute load evenly. Do not exceed weight capacity shown on decals.

D. Avoid sudden stops and starts. Do not go from reverse to forward or forward to reverse without first coming to a complete stop.

E. Do not attempt sharp turns or abrupt maneuvers or other unsafe driving actions that may cause a loss of Tractor control.

F. Before backing up, look to the rear and assure no one is behind. Back up slowly.

G. Watch out for traffic when near or crossing roads. Always yield the right of way to pedestrians and other vehicles. Always signal your turns or stop early enough so other persons know what you plan to do. Obey all traffic rules and regulations.

H. If ever unsure about safe operation, STOP WORK and ask your supervisor.

16. Do not touch engine, muffler or muffler shield while engine is running or soon after it has stopped because these areas may be hot enough to cause burns.

17. If the machine ever vibrates abnormally, stop immediately, turn engine off, wait for all motion to stop and inspect for damage. Repair all damage before commencing operation.

18. Before getting off the Tractor seat:

A. Stop movement of the Tractor.

B. Shut engine off and wait for all movement to stop.

C. Set parking brake.

D. Remove key from ignition.

E. Chock wheels if machine is to be left unattended.

SLOPE OPERATION

Slope operation demands special attention due to the potential for loss of control. The following guidelines are recommended in order to minimize the possibility of an accident. All operators of this machine should be familiar with these guidelines.

A. Never operate on steep slopes. Travel up or down slopes, **never** across the face. Travel **down** the slope whenever possible. **Never** start or stop suddenly when traveling up or down slopes. Always chock the wheels when leaving the Topdresser unattended. **Never** leave Topdresser unattended when loaded.

B. Avoid making turns on a hillside whenever possible. Always reduce speed when making turns.

C. Do not exceed the maximum speed of 5 MPH when loaded. Use extra caution when operating vehicle on wet surfaces or with a full load. Stopping time will increase with a full load. Shift Tractor into a lower gear before starting up or down a hill.

MAINTENANCE

19. Before servicing, lubricating or making adjustments to the Topdresser, stop engine and wait for all movement to stop. Remove key from ignition to prevent accidental starting of the engine. Chock wheels if machine is on an incline.

20. To make sure entire machine is in good condition, keep all nuts, bolts and screws properly tightened.

21. To reduce potential fire hazard, keep the engine area free of excessive grease, grass, leaves and accumulation of dirt.

22. If the engine must be running to perform a maintenance adjustment, keep hands, feet, clothing, and any parts of the body away from the engine and any moving parts. Keep everyone away.

⚠ SAFETY INSTRUCTIONS

23. Do not overspeed engine by changing governor settings. Maximum engine speed is 3600 no-load rpm. To assure safety and accuracy, have an Authorized TORO Distributor check maximum engine speed with a tachometer.

24. If major repairs are ever needed or assistance is required, contact an Authorized TORO Distributor.

25. To be sure of optimum performance and safety, always purchase genuine TORO replacement parts and accessories. Replacement parts and accessories made by other manufacturers could be dangerous.

Altering this Topdresser in any manner may affect it's operation, performance, durability or its use may result in injury or death. Such use could void the product warranty of the Toro Company.

26. This Topdresser should not be modified without the Toro Company's authorization. Direct any inquiries to:

The Toro Company
Commercial Division
1625 N. Garvin
Evansville, Indiana 47711-4596. USA

⚠ SAFETY INSTRUCTION DECALS



Part No. 66-1210: One located front of Hopper, one on Engine Shroud.

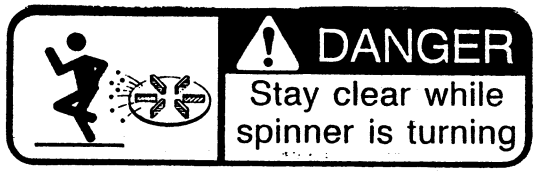

Part No. 42369: Located at rear of Hopper, above Spinner.

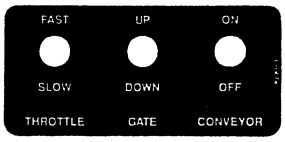

Part No. 92-8363: Located on Control Panel, under Toggle Switches.



Part No. 41176 Located on Control Panel, next to Key Switch.

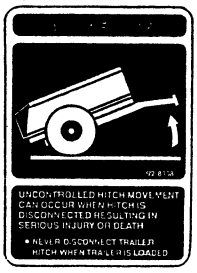

Part No. 92-8308 Located on Tongue, near Jackstand.



Part No. 87-0420: Located on L.H. front and L.H. rear of Hopper.



Part No. 92-8394: Located on Control Box, at POSITIVE terminal.



Part No. 92-8395: Located on Control Box, at NEGATIVE terminal.



Part No. 92-8309: Located on L.H. side of Engine Shroud.



Part No. 92-3993: Located on L.H. front of Hopper.

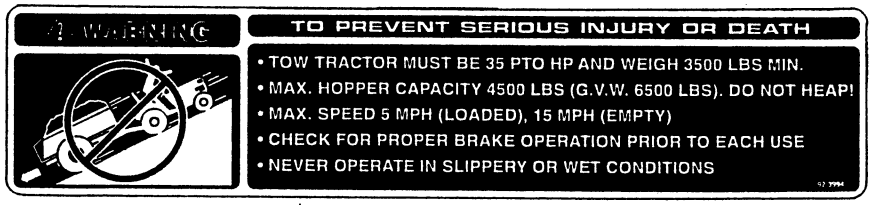

Part No. 92-3994: One located on each side of Hopper.

BEFORE OPERATING

TOWING TRACTOR CONNECTION:

When the Topdresser's trailer tongue is attached to the towing Tractor's draw bar, the Hopper should be level or slightly downhill as shown in FIG. 1. **CAUTION!** Chocks must be used to prevent any accidental movement of the Topdresser. A Chock approximately the size and shape shown in FIG. 1 is recommended.

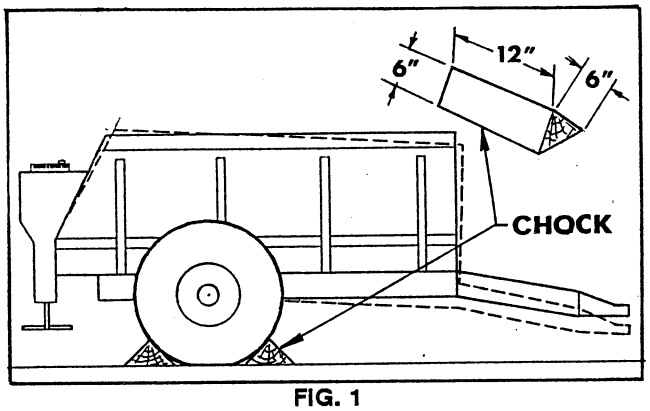

FIG. 1

1. Have the Topdresser on a level surface with wheel chocks under the wheels.

2. Slowly back the towing Tractor to position it's draw bar close enough to the Topdresser's hitch yoke, to make a visual alignment of the connection. See FIG. 2.

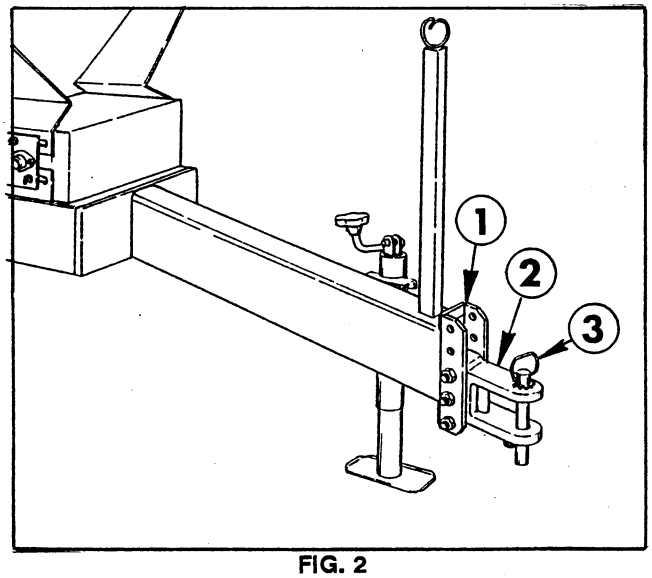

FIG. 2

1. Hitch Yoke
2. Clevis
3. Hitch Pin

3. Reposition the Clevis within the trailer's hitch yoke if necessary. Secure with three (3) 5/8" x 4-1/2" hex hd. cap screws and lock nuts.

4. When alignment is complete, insert the Hitch Pin through the clevis and the Tractor's draw bar. Secure with the cotter pin.

WIRING HARNESS CONNECTION:

The Wiring Harness provides power to the electric brakes and controls. Never operate without Wiring Harness connected.

⚠ WARNING

BRAKE FAILURE CAN CAUSE LOSS OF CONTROL AND RESULT IN SERIOUS INJURY OR DEATH.

- Check the towing Tractor's brakes before operation. Have the brake pedals locked together.
- Test for proper Topdresser brake operation as described in OPERATING INSTRUCTIONS section, page 8.
- Correct any problems before operation.
- Never operate without brakes.

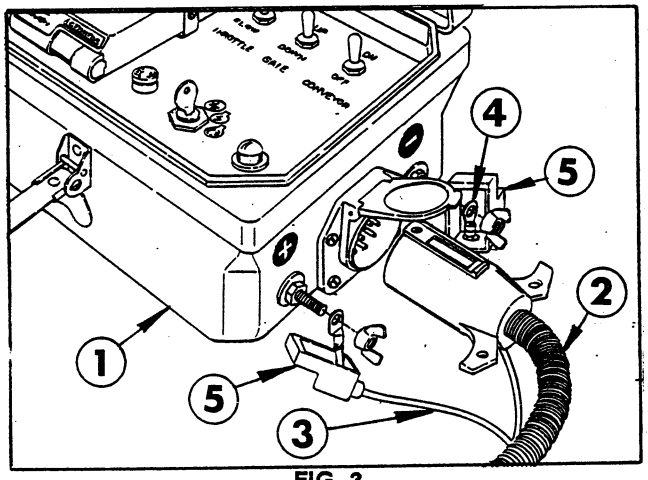

FIG. 3

1. Control Box
2. Wiring Harness
3. Red Cable (+)
4. Black Cable (-)
5. Insulating Boots

1. Lift the cover plate on the receptacle in the Control Box as shown in FIG. 3.

2. Match the plug on the end of the Wiring Harness to the socket in the Control Box. Insert the plug until the locking tab on the cover plate catches.

3. Connect the **red** cable of the Wiring Harness to the **positive** (+) post on the Control Box.

4. Connect the **black** cable of the Wiring Harness to the **negative** (-) post on the Control Box.

5. Secure with wing nuts.

6. Position insulating boots to cover posts.

CONTROLS

REMOTE CONTROL BOX:

Contains the controls to operate the Topdresser from the Operator's seat of the towing Tractor. See FIG. 4.

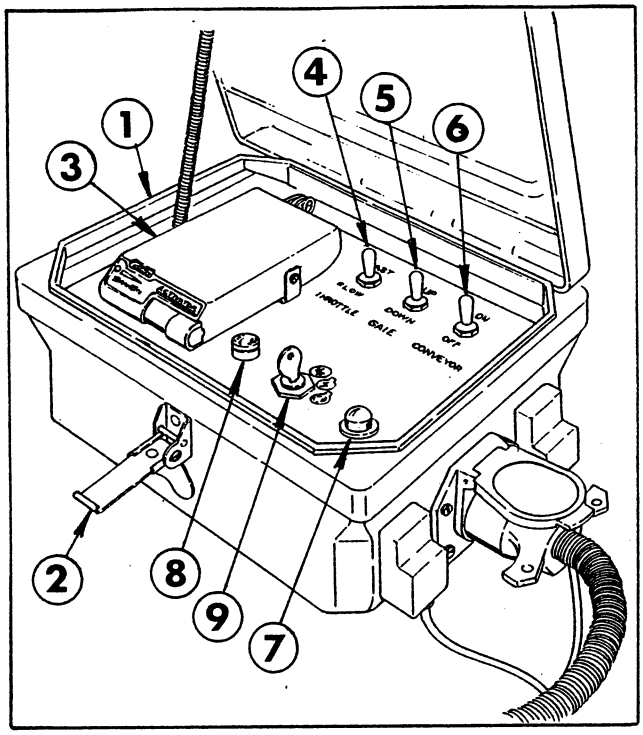

FIG. 4

1. Control Box
2. Security Latch
3. Electric Brake Controller
4. Throttle
5. Gate Control
6. Conveyor Control
7. Indicator Light
8. Fuse Holder
9. Ignition Switch

NOTE: When the Topdresser is not in use, the lid of the Control Box should be closed and the latch secured.

ELECTRIC BRAKE CONTROLLER: Operates in conjunction with the towing Tractor's brakes to control the Topdresser's brakes.

With the brake switch installed on the towing Tractor as described in the Installation Instructions, the Topdresser's brakes are applied as soon as the towing Tractor's brake pedal(s) are depressed - or, the Controller's Manual Control is activated.

The red indicator light is illuminated only when the Topdresser's brakes are applied. **If the indicator light does not glow red when the brakes are applied, STOP THE TRACTOR AND CORRECT THE PROBLEM BEFORE RESUMING OPERATION!**

⚠ WARNING

BRAKE FAILURE CAN CAUSE LOSS OF CONTROL AND RESULT IN SERIOUS INJURY OR DEATH.

- Test brake functions before operation.
- Correct any problem before operation.

There are two brake adjustments on the Controller. See FIG. 5.

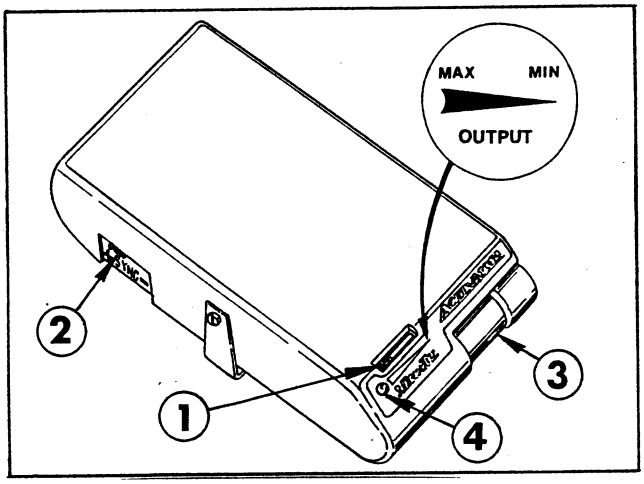

FIG. 5

1. "OUTPUT" Setting
2. "SYNC" Setting
3. Manual Brake Control
4. Indicator Light

A. "OUTPUT": The sliding selector controls the amount of **force** exerted by the brakes.

B. "SYNC": The sliding selector controls the **timing** of brake application, i.e. **(-)** "soft" or **(+)** "aggressive". **NOTE:** The "SYNC" setting is set at the factory at the **(+)** setting and should not be moved from that setting.

MANUAL BRAKE CONTROL: Applies the **Topdresser's** brakes only and is used to stop the Topdresser in an emergency situation, or can be used to straighten a Jacknifed Topdresser.

Squeezing the outer half of the Control to the left begins to apply the Topdresser's brakes. The further to the left it is squeezed, the harder the brakes are applied, until the maximum set by the OUTPUT control is reached.

CONTROLS

GATE CONTROL: Activates the Flow Control to raise and lower the Gate at the rear of the Topdresser. See FIG. 4.

A. Decreasing the engine speed and/or the Gate opening will **decrease** the amount of material applied.

B. Increasing the engine speed and/or the Gate opening will **increase** the amount of material applied. See page 9 for instructions to adjust the Gate opening.

CONVEYOR CONTROL: Is used to engage or disengage the Electric Clutch. When the toggle switch is in the "ON" position, the Conveyor and Spinner will operate. When the toggle switch is in the "OFF" position, the Conveyor and Spinner will stop. See FIG. 4.

IMPORTANT! The Electric Clutch can be engaged or disengaged at any time and at any engine RPM. Since engagement time and torque is almost instantaneous, to prevent premature Spinner Chain failure and Chain tension loss, the Electric Clutch should be engaged at the lowest possible RPM without killing the engine.

INDICATOR LIGHT: When the light is illuminated the GATE and CONVEYOR systems can be activated. **NOTE:** Leaving the Ignition Key at "RUN", without the engine running, can discharge the Battery. See FIG. 4.

FUSE HOLDER: For 30-amp fuse. Twist on/off cap for replacement. GATE, THROTTLE, and CONVEYOR switches are on fuse circuit.

IGNITION SWITCH: Used to start and stop the engine, has three positions "OFF", "RUN", and "START". See FIG. 4. Rotate key clockwise to start the engine. Release key when engine starts. The key will move automatically to the "RUN" position. In the "RUN" position, power is provided to the THROTTLE, GATE, and CONVEYOR switches. To shut engine off, rotate the key counter-clockwise to "OFF" position.

THROTTLE: Controls the speed of the engine and acts as a "choke" for a cold engine start. Pushing the toggle switch forward to "FAST" **increases** the engine speed. Pulling the toggle switch rearward to "SLOW" **decreases** the engine speed. See FIG. 4.

ADJUSTABLE BAFFLES: The Baffles are used to direct the material onto the Spinner. They can be adjusted to direct more or less material to either the right or left side of the Spinner, or to widen or narrow the spread pattern. See FIG. 6. Loosen the Adjustment Knobs and slide the Baffles to the right or left as desired. Tighten the Adjustment Knobs. **WARNING! Never adjust the Baffles when the Spinner is rotating!**

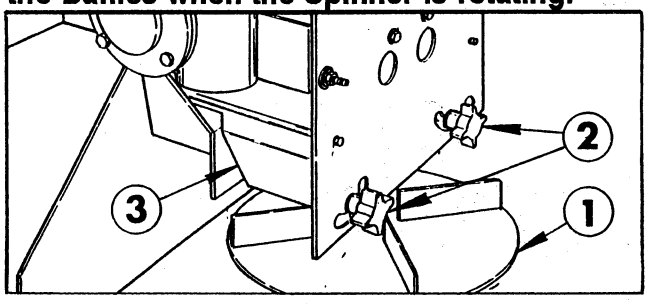

FIG. 6

1. Spinner
2. Adjustment Knob
3. Baffle

OPERATING INSTRUCTIONS

PRE-STARTING CHECKS:

Safe operation begins before taking the Topdresser out for a day's work. You should check these items each time:

1. Refer to and follow the instructions in your Tractor's Operator's Manual for all pre-starting checks and safety precautions regarding the safe towing of implements. Have Brake Pedals locked together.

2. Check trailer brake operation. See "Testing Trailer Brakes", page 8.

3. Check all fluid levels and add the appropriate amount of Toro specified fluids, if any are found to be low. Check the engine's Air Filter.

4. Check to be sure the Conveyor Chain is not stuck or "frozen" to the floor of the Hopper. See page 10.

5. Check tire pressure. Maintain at 20 p.s.i.

6. Check for oil leaks, loose parts and any other noticeable malfunctions. Make sure engine is off and all moving parts have stopped before checking for oil leaks, loose parts and other malfunctions.

If any of the above items are not correct, notify your mechanic or check with your supervisor before taking the Topdresser out for the day. Your supervisor may want you to check other items on a daily basis, so ask what your responsibilities are.

OPERATING INSTRUCTIONS

TOPDRESSER BRAKE OPERATION

WARNING! The brakes require a break-in period of approximately 100 stops for the brakes to "burnish" and generate maximum brake force. The brakes are self-adjusting and will adjust as required in reverse brake applications. See MAINTENANCE section.

The Topdresser's brakes are electrically controlled by the Brake Controller to act in unison with the towing Tractor's brake pedals. Make sure the towing Tractor's brakes are locked together. See FIG. 7.

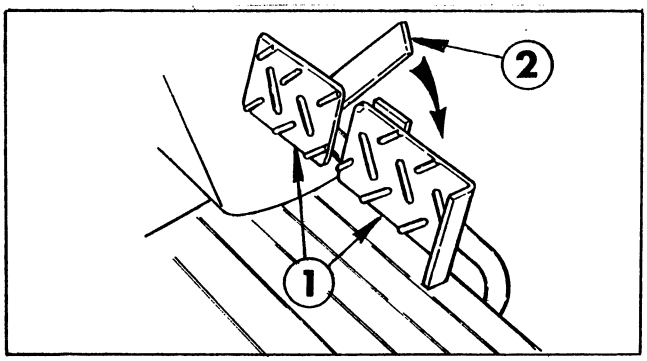

FIG. 7

1. Brake Pedal 2. Brake Lock

⚠ WARNING

FAULTY BRAKES CAN CAUSE A LOSS OF CONTROL RESULTING IN SERIOUS INJURY OR DEATH.

- Test brake functions **before** operation.
- Correct any brake problem before operation.

Test brake function as follows:

1. Have the Hopper empty and the Controller's "OUTPUT" setting at maximum (full left).

2. Sit on the Tractor's operator's seat and start the Tractor's engine. Drive the Tractor for a short distance.

3. Squeeze the Manual Brake Control, full left.

The Topdresser's Wheels should **lock** to indicate the Brakes are functioning correctly. If not, see TROUBLE SHOOTING section.

The "OUTPUT" should always be set at it's **maximum** setting when Hopper is **loaded!**

The "OUTPUT" can be adjusted to a lower setting to prevent "scuffing" the turf, when Hopper is **empty.**

STARTING THE ENGINE:

1. Have CONVEYOR toggle switch at "OFF".

2. Have GATE toggle switch at "DOWN".

3. Insert the key in the Ignition Switch and rotate it clockwise to "RUN".

4. Move and hold the THROTTLE control to "FAST" (to choke the engine).

5. Rotate the key to "START" to start the engine. Release the key as soon as the engine starts.

IMPORTANT: To prevent overheating of the starter motor, do not engage starter longer than 15 seconds. After 15 seconds of continuous cranking, wait 60 seconds before engaging starter motor again.

6. Position the THROTTLE control at the desired engine speed.

STOPPING ENGINE: Rotate ignition key counter-clockwise to "OFF".

DETERMINING SPREAD PATTERN:

The kind of coverage (light or heavy) is best determined by the superintendent. To achieve the desired rate of coverage, you many want to experiment with your first load of top dressing, based on the following guidelines to establish the settings required for your particular application.

The amount and rate of flow of the material to be applied will depend on several factors:

A. The type of top dressing material to be applied (wet or dry).

B. The Gate opening.

C. The Topdresser's engine speed.

The spread pattern is determined by the:

A. Positioning of the right and left hand Baffles.

B. The towing Tractor's ground speed.

⚠ WARNING

DRIVING FASTER THAN 5 MPH WITH A LOADED HOPPER CAN CAUSE A LOSS OF CONTROL RESULTING IN SERIOUS INJURY OR DEATH.

OPERATING INSTRUCTIONS

ADJUSTING THE GATE OPENING:

The two Limit Switches control the length of the Actuator's extension or retraction. The Limit Switches are set at the factory to **fully** open and close the Gate when the GATE toggle switch is activated. See FIG. 8.

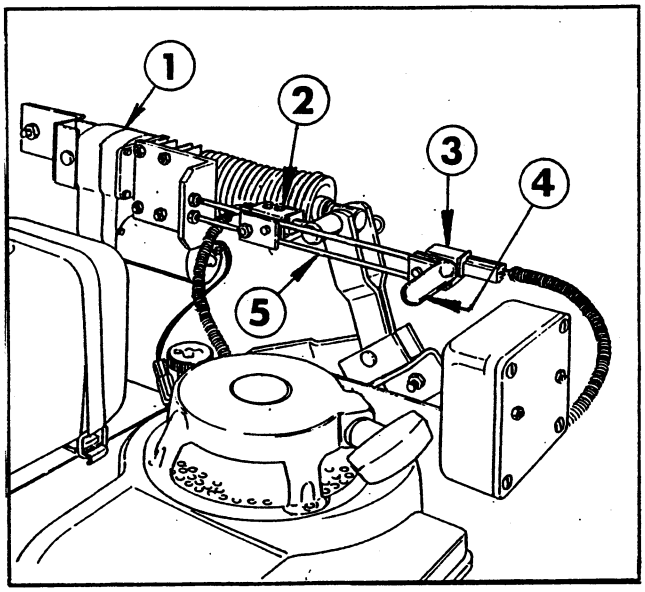

FIG. 8

1. Actuator
2. Limit Switch (CLOSE)
3. Limit Switch (OPEN)
4. Adjustment Knob
5. Switch Guide

The Limit Switch that controls the closing of the Gate should not require further adjustment. However, if you prefer an opening less than full open for your topdressing material, it will be necessary to adjust the Limit Switch as follows:

1. Loosen the Knob securing the "OPEN" Limit Switch to the Switch Guide and slide it along the Guide to a point approximately 3/4, 1/2 or 1/4 of the distance between the full "OPEN" position and the "CLOSE" Limit Switch.

2. Tighten the Knob on the "OPEN" Limit Switch and position the GATE toggle switch to "OPEN".

3. Check the Gate's opening and re-adjust as necessary.

TO BEGIN APPLICATION:

1. Fill the Hopper just prior to actual operation of the Topdresser.

⚠ WARNING

AN OVERLOADED HOPPER CAN CAUSE A TIPOVER OR LOSS OF CONTROL RESULTING IN SERIOUS INJURY OR DEATH.

- Do not exceed the load capacity of 4,500 lbs. (G.V.W. 6,500 lbs.) shown on the decal on each side of the hopper.
- Distribute the weight of the load evenly from front to rear and from side to side.
- Do not heap or mound the topdressing material.

2. Sit on the Tractor's operator's seat and start the Tractor's engine.

3. Insert the key in the Control Box's Ignition Switch and rotate clockwise to "RUN" position.

4. Hold the THROTTLE control at "FAST" to "choke" the engine.

5. Rotate the ignition key to "START" to start the engine. Move the THROTTLE control to the desired engine speed.

6. Engage the towing Tractor's drive and as the Tractor and Topdresser begin to move forward.

7. Move the GATE switch to "OPEN" to open the Hopper Gate.

8. Move the CONVEYOR switch to "ON" to start the Chain and Spinner drive.

9. Maintain the forward speed of the towing Tractor, as nearly as possible, to that speed **(5 MPH MAX.)** determined previously, to achieve the material flow and spread pattern desired.

When Topdresser is to be disconnected from the towing Tractor, **always** have the Hopper **empty.** Never disconnect a **loaded** Hopper!

MAINTENANCE

⚠ WARNING

ACCIDENTAL ENGINE STARTS CAN CAUSE SERIOUS INJURY OR DEATH.

- Before servicing the Topdresser, stop the engine and remove the ignition key.
- Disconnect and ground the spark plug lead.

WHEN JOB IS COMPLETED:

1. Wash the inside of the Hopper. If the Topdresser is to be put in storage, all surfaces should be oiled or painted after washing. See the STORAGE section for more information.

2. Spray wash all of the outside surfaces of the Topdresser.

IMPORTANT! When using a high pressure washer hose to clean the inside of the engine compartment, it is necessary to cover or otherwise protect the Electric Actuator and Limit Switches. Water entering the Actuator and/or the Limit Switches will cause serious damage, resulting in premature failure of those parts.

The Electric Control Box is not absolutely waterproof, and must be protected to prevent moisture from damaging the electronic system.

ELECTRIC CLUTCH BELT:

1. Check the condition and tension of the Clutch Belt after the **first 5 hours of operation** and every 50 hours thereafter. Tension is correct when the belt can be deflected 1/4 inch by a 5 pound force, applied at mid-span of the pulleys. Too much tension will cause premature wear on the Belt and Pulley Bearings.

2. To adjust the Clutch Belt tension:

   A. Loosen the engine hold-down bolts and slide the engine as required.

   B. Re-tighten the engine bolts.

IMPORTANT: Over tightening the Clutch Belt tension can damage the Gearbox.

CONVEYOR CHAIN:

IMPORTANT! If the Chain becomes stuck or "frozen" to the floor of the Hopper and the Clutch cannot pull the load, **never** attempt to free the Chain by using a pipe wrench or any tool on the Gearbox output shaft. The Gearbox is designed to accept torque from the **input** shaft only. Trying to turn the **output** shaft will strip the gears, thus voiding the warranty.

Check the Conveyor Chain "slack" **after the first five hours of operation**. The distance between the Conveyor Sprocket and the point where chain makes contact with the lower conveyor flange, should be maintained at 12 to 18 inches, as shown in FIG. 9. To take up the "slack":

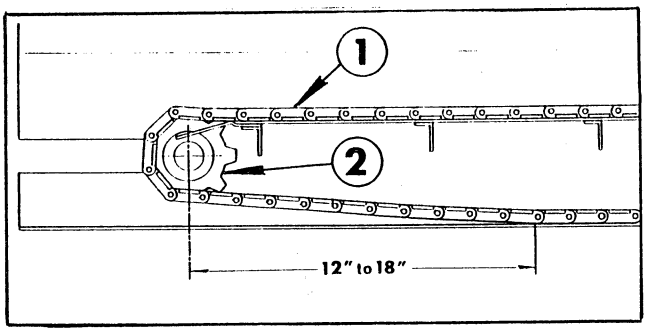

FIG. 9

1. Conveyor Chain
2. Conveyor Sprocket

A. Loosen the three nuts in the two front Bearing Plates and the jam nuts on the set screws. See FIG. 10. Turn the set screws against the Bearing Plate flanges, to slide the Idler Shaft forward.

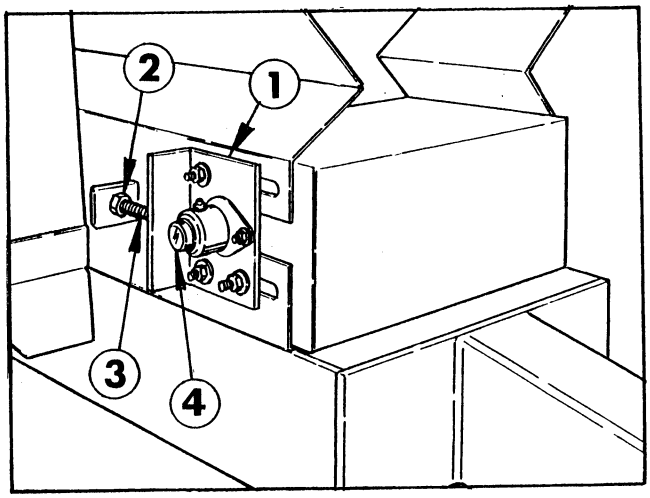

FIG. 10

1. Front Bearing Plate
2. Jam Nut
3. Set Screw
4. Idler Shaft

B. After adjustment is complete, tighten the jam nuts. Re-tighten the three nuts securing the Bearing Plates.

MAINTENANCE

ROLLER CHAIN:

A chain that is too **loose** will "climb" on the Sprocket teeth, "slap" and run noisily. A chain that is too **tight** will cause excessive bearing loads, resulting in heat build-up and wear. To correct either problem, proceed as follows:

1. Make sure the Sprockets are in vertical alignment with one another. Correct any misalignment by loosening the set screw in the Gearbox Sprocket and raise or lower it to align it with the Spinner Sprocket. See FIG. 11.

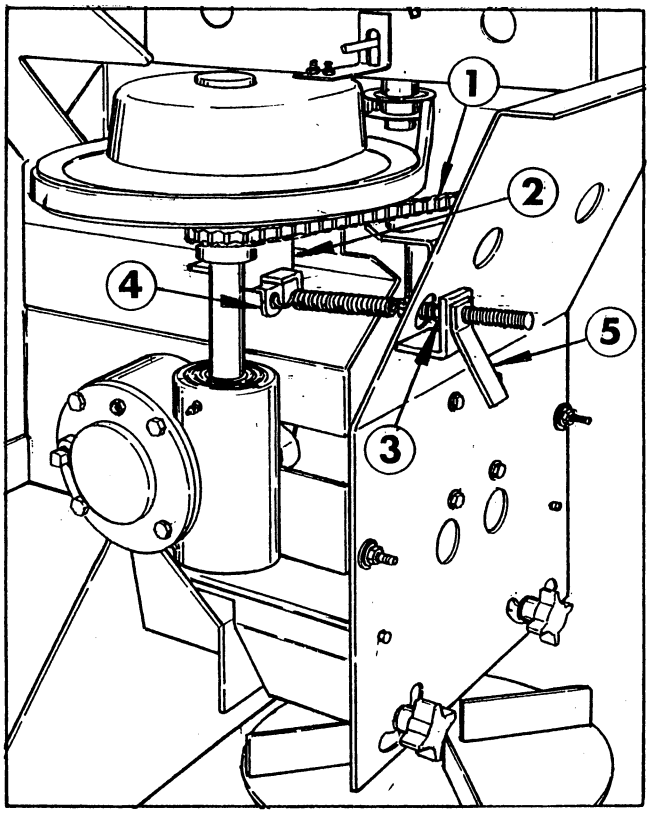

FIG. 11

1. Roller Chain
2. Idler Block
3. Jam Nut
4. Idler Bracket
5. Tensioner Handle

2. Adjust the Roller Chain tension by moving the Idler Block toward the Chain to increase the tension, or away from the Chain to decrease the tension.

A. Loosen the nut at the bottom of the Idler Bracket and the jam nut on the Adjustment Bolt.

B. Turn the Tensioner Handle clockwise to increase the tension or counter-clockwise to decrease the tension.

C. When adjustment is complete, tighten the jam nut. Tighten the nut under the Idler Bracket .

ENGINE LUBRICATION:

AFTER THE INITIAL RUN-IN PERIOD (APPROXIMATELY 5 HOURS) AND EVERY 25 HOURS THEREAFTER:

1. Change the oil in the engine's crankcase. Change oil while the engine is warm. Refill with new oil as recommended in the chart below.

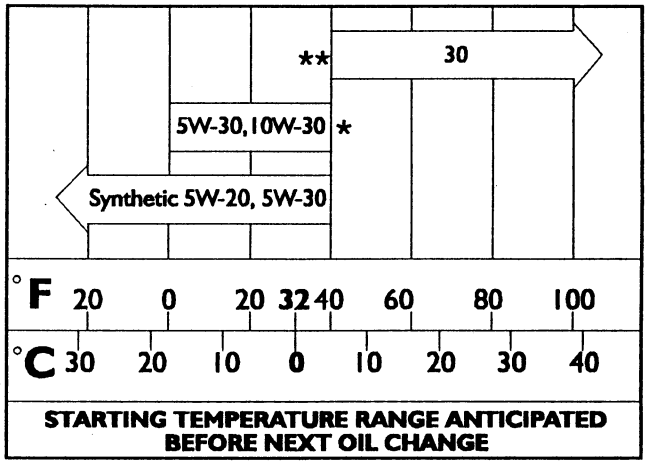

* Air cooled engines run hotter than automotive engines. Use of multi-viscosity oils (10W-30, etc.) above 40°F (4°C) will result in high oil consumption and possible engine damage. Check oil more frequently if using these type oils.

** SAE 30 oil, if used below 40°F (4°C) will result in hard starting and possible engine bore damage due to inadequate lubrication.

Oil Capacity: Approximately 36 ounces or 1.1 liters.

2. Remove the pipe plug in the end of the oil drain hose and let oil flow into a drain pan. When oil stops, re-install drain plug. See FIG. 12.

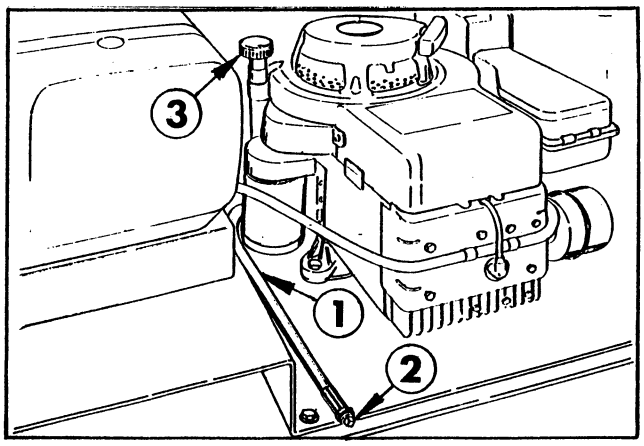

FIG. 12

1. Drain Tube
2. Drain Plug
3. Dipstick/Oil Fill

MAINTENANCE

AFTER EVERY 5 HOURS OR DAILY:

1. Check the oil level in the engine's crankcase **before** engine start-up, while engine is cool. Have the machine on a level surface.

2. Remove dipstick and wipe it with a clean rag. Insert dipstick into tube and make sure it is seated fully.

3. Add oil if necessary to bring oil level up to, but not over the "FULL" mark on the dipstick. See FIG. 13. Add oil slowly and check the level often. **IMPORTANT!** Keep the area around the fill tube clean, to prevent dirt from falling into the engine.

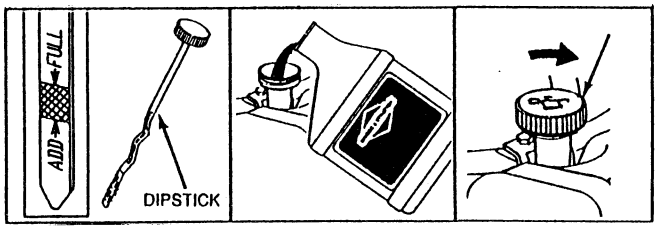

FIG. 13

AIR CLEANER:

Clean the oil foam element after every 25 hours of operation. Clean more often in extreme dusty or dirty conditions. Replace air cleaner parts if very dirty.

1. Lift latch on narrow end of air cleaner cover and remove cover. See FIG. 14.

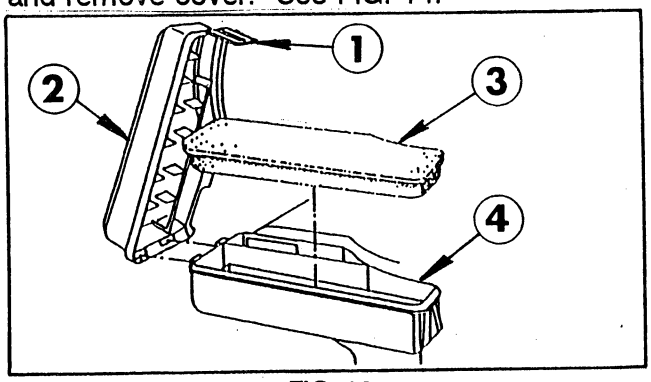

FIG. 14

1. Latch
2. Cover
3. Foam Element
4. Body

2. Remove element and wash in kerosene or liquid detergent and water.

3. Squeeze dry in clean cloth. Saturate foam element in engine oil. Squeeze in clean absorbent cloth to remove excess oil.

4. Place element into air cleaner body, making sure element extends over edges of body to form protective seal. Insert tabs into slots and press down on cover until latch snaps into place.

CHASSIS LUBRICATION:

AFTER EVERY 10 HOURS OF OPERATION:

1. Use a hand gun with a good grade of all-purpose grease to lubricate through the zerks as shown in FIG. 15 and FIG. 16.

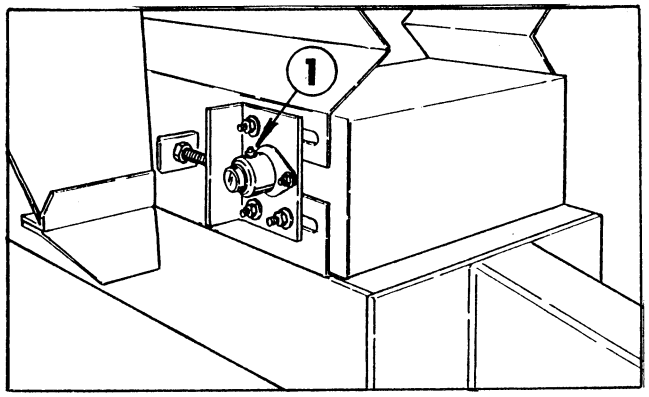

FIG. 15

1. Idler Bearings (2)

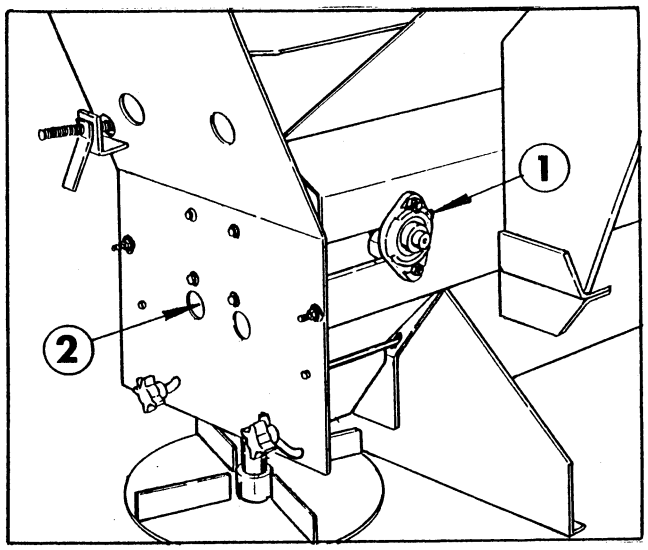

FIG. 16

1. Gearbox Output Shaft Bearing
2. Lower Spinner Bearing

MAINTENANCE

AFTER EVERY 50 HOURS OF OPERATION:

2. Grease the input shaft bearing on the Gear Box. See FIG. 17.

IMPORTANT! Overgreasing can cause the seals in the bearings to be damaged!

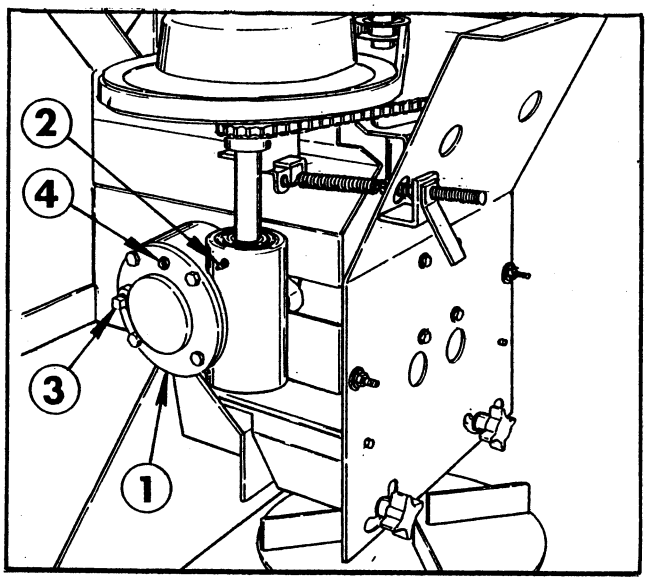

FIG. 17

1. Gearbox
2. Gearbox Input Shaft Bearing
3. Pipe Plug
4. Breather Plug

3. Remove the pipe plug and check the oil level in the Gear Box. See FIG. 17. If oil does not run out, fill to plug opening with S.A.E. 90 Gear Lubricant. **NOTE:** Keep breather plug clean.

4. Oil the Conveyor Chain.

CHECK SPARK PLUG:

Every 50 hours of operation, clean the area around the base of the plug and check its condition. See FIG. 18. Reset the gap to .030 in. (0.76 mm) or replace with a new **resistor** spark plug as necessary.

Do not blast clean. Clean by scraping or wire brushing and washing with a commercial solvent.

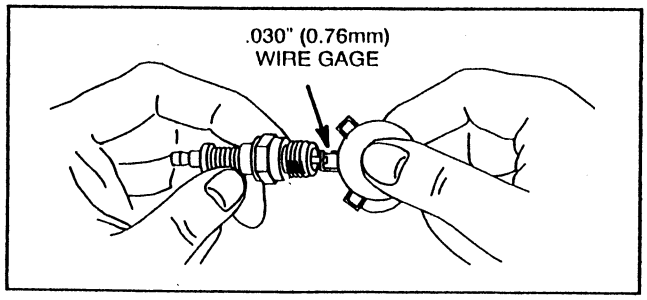

FIG. 18

CLEAN AIR INTAKE/COOLING AREAS:

To insure proper cooling, make sure the screen, cooling fins and other external surfaces of the engine are kept clean at all times. **NOTE:** Operating the engine with a blocked screen, dirty or plugged cooling fins, and/or cooling shrouds removed, will cause engine damage due to overheating.

Every 100 hours of operation (more often under dusty, dirty conditions), remove the blower housing and other cooling shrouds. Clean the cooling fins and external surfaces as necessary. Make sure the cooling shrouds are reinstalled.

BRAKE ADJUSTMENT:

The Topdresser's Brakes are self-adjusting. A **reverse** brake application will cause the adjuster pawl to engage the next tooth of the adjuster star wheel. This is usually sufficient for Brakes that require adjustment due to normal wear.

For Brakes requiring further adjustment, proceed as follows:

1. Use a jack stand with the capacity to lift the Topdresser to raise the tire clear of the ground surface.

2. Remove the dust plug from the Brake dust cover as shown in FIG. 19.

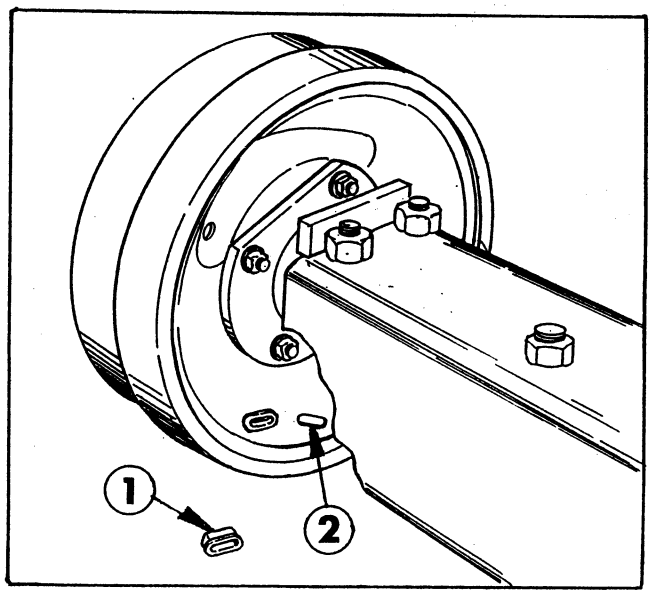

FIG. 19

1. Dust Plug
2. Access Hole

3. Use a brake tool through the Access Hole to rotate the star wheel to the point where the shoes are lightly dragging the drum as the wheel is rotated.

TROUBLE SHOOTING GUIDE

PROBLEM	POSSIBLE CAUSES	SOLUTION
Trailer braking is delayed.	1. Incorrect Sync Adjustment	Adjust to most aggressive (+) position.
Trailer Brakes are weak.	1. Incorrect Output Adjustment	Adjust for more output.
Intermittent or inconsistent Trailer Brakes.	1. Short in blue wire in main Wire Harness. 2. Short in grey ground wire in main Harness.	Locate short and repair.
No Trailer Brakes - Pedal or manual operation (Light not illuminating).	1. No power to Control Box from Tractor. 2. Output adjusted too low.	Check power connections to tractor battery, adjust output.
No Trailer Brakes - pedal or manual operation (Light is illuminating).	1. Broken connection in blue or grey wire in main Wire Harness.	Check for continuity in blue & grey wires, check connectors.
No brakes with pedal operation, but brakes work manually.	1. Faulty brake switch.	Replace Brake Switch.
Brakes locked on, won't go off.	1. Brake Switch not adjusted correctly. 2. Faulty Brake Switch.	Adjust Brake Switch as shown in Set-Up Instructions, replace if required.
Brake control overheats smells hot; Low or no brake output.	1. Power supply connections reversed.	Brake controller damaged, correct wiring & replace brake controller.
None of the controls work, indicator light off.	1. Blown fuse. 2. Main power or ground connection loose.	Replace fuse, check main power & ground connections.
Engine won't "turn over" to start.	1. Poor main ground connection to trailer. 2. Poor connection from positive cable to starter.	Inspect and correct connections.
Engine turns over but will not start.	1. Throttle not set to choke. 2. Throttle not working.	Set throttle to choke, attempt to start, check engine manual.
Throttle not working.	1. Linkage at engine disconnected. 2. Blown fuse.	Inspect & repair linkage, replace fuse if required.
Flow Control gate not working.	1. Gate stuck. 2. Blown fuse. 3. Linkage disconnected.	Insure that gate is free to move, replace fuse, or inspect & repair linkage.
Conveyor & Spinner not engaging.	1. Loose drive belt. 2. Poor ground on electric clutch.	Tighten drive belt, inspect & repair ground.

STORAGE

Check the Topdresser thoroughly for any worn or damaged parts. If necessary, replacement parts are available from your Authorized TORO Distributor. Please specify your model and serial numbers. This information can be found stamped on the serial number plate, which is located on the front Chain Shield, below the Manual Tube.

⚠ DANGER

GASOLINE IS HIGHLY FLAMMABLE AND CAN CAUSE SERIOUS INJURY OR DEATH IF IGNITED.

- Never store a machine with gasoline in the tank or inside a building where gasoline fumes may reach an open flame or spark.

ENGINE: If Topdresser is stored over 30 days the engine needs to be protected or drained of fuel to prevent gum from forming in the fuel system or essential carburetor parts. See the B & S Engine Manual for complete storage instructions.

ELECTRIC CLUTCH:

Remove the Electric Clutch from the Gear Box input shaft and clean thoroughly.

After cleaning, coat both mating surfaces of the Clutch with oil or light weight grease. **IMPORTANT! The oil or grease must be removed prior to the next using season.**

CHASSIS:

1. Wash the inside of the Hopper and all of the outside surfaces of the Topdresser. All surfaces should be oiled or painted after washing.

2. Oil the Roller Chain and the Conveyor Chain.

3. Lubricate all bearings as described on pages 12 & 13.

4. Check the oil level in the Gear Box. Add oil if necessary, as described on page 13.

The Toro Promise
A One Year Limited Warranty

The Toro Company promises to repair your model 41420 Topdresser 5000 if defective in materials or workmanship. The following time periods from the date of purchase apply special warranty terms, on certain components, may be offered through The Toro Company by the component manufacturers:

Commercial Products.....1 Year

The cost of parts, labor and transportation are included.

If you feel your TORO Product is defective and wish to rely on The Toro Promise, the following procedure is recommended:

1. Contact your Authorized TORO Distributor or Commercial Dealer (the Yellow Pages of your telephone directory is a good reference source).

2. The TORO Distributor or Commercial Dealer will advise you on the arrangements that can be made to inspect and repair your product.

3. The TORO Distributor or Commercial Dealer will inspect the product and advise you whether the product is defective and, if so, make all repairs necessary to correct the defect without an extra charge to you.

If for any reason you are dissatisfied with the distributor's analysis of the defect or the service performed, you may contact us.

Write:

TORO Commercial Products Service Department
8111 Lyndale Avenue South
Bloomington, MN 55420-1196

The above remedy of product defects through repair by an Authorized TORO Distributor or Commercial Dealer is the purchaser's sole remedy for any defect.

THERE IS NO OTHER EXPRESS WARRANTY. ALL IMPLIED WARRANTIES OF MERCHANTABILITY AND FITNESS FOR USE ARE LIMITED TO THE DURATION OF THE EXPRESS WARRANTY.

Some states do not allow limitations on how long an implied warranty lasts, so the above limitation may not apply to you.

This Warranty applies only to parts or components which are defective and does not cover repairs necessary due to normal wear, misuse, accidents, or lack of proper maintenance. Regular, routine maintenance of the unit to keep it in proper operating condition is the responsibility of the owner.

All warranty repairs reimbursable under The Toro Promise must be performed by an Authorized Toro Commercial Dealer or Distributor using Toro approved replacement parts.

Repairs or attempted repairs by anyone other than an Authorized TORO Distributor or Commercial Dealer are not reimbursable under The TORO Promise. In addition, these unauthorized repair attempts may result in additional malfunctions, the correction of which is not covered by warranty.

THE TORO COMPANY IS NOT LIABLE FOR INDIRECT, INCIDENTAL OR CONSEQUENTIAL DAMAGES IN CONNECTION WITH THE USE OF THE PRODUCT INCLUDING ANY COST OR EXPENSE OF PROVIDING SUBSTITUTE EQUIPMENT OR SERVICE DURING PERIODS OF MALFUNCTION OR NON-USE.

Some states do not allow the exclusion of incidental or consequential damages, so the above exclusion may not apply to you.

This warranty gives you specific legal rights, and you may also have other rights which vary from state to state.

COUNTRIES OTHER THAN THE UNITED STATES OR CANADA

Customers who have purchased TORO products exported from the United States or Canada should contact their TORO Distributor (Dealer) to obtain guarantee policies for your country, province, or state. If for any reason you are dissatisfied with your Distributor's service or have difficulty obtaining guarantee information, contact the TORO importer. If all other remedies fail, you may contact us at The Toro Company.

Compliance with Radio Interference Regulations Certified.