FORM NO. 92-8323

TORO

MODEL NO. 41420-40001 & UP

INSTALLATION INSTRUCTIONS

TOPDRESSER 5000

NOTE: "Right", "Left", "Front" and "Rear are referenced while seated in the operator's position.

ELECTRIC CONTROL BOX:

Select a convenient, flat surface on your Tractor's right hand fender to mount the Mounting Bracket which will hold the Electric Control Box. See FIG. 1. **NOTE:** When mounting the Bracket on Tractors with "round" fenders, it may be necessary to place shims between the Bracket and the fender, to create a flat, level surface.

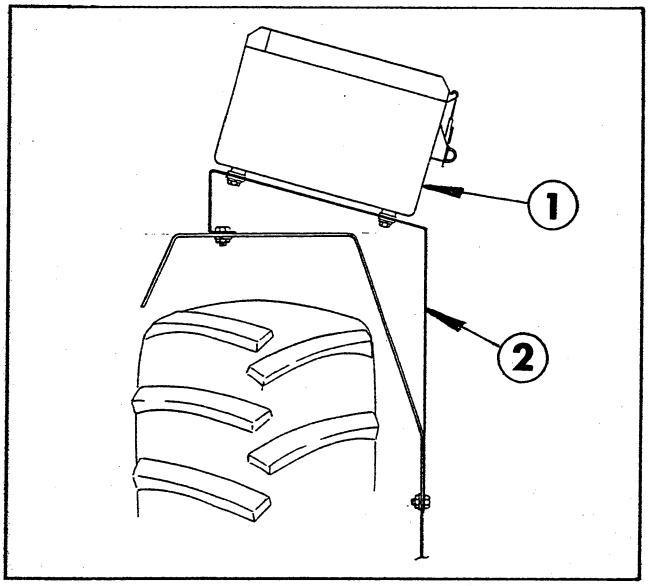

FIG. 1

1. Electric Control Box 2. Mounting Bracket

1. Use the Mounting Bracket as a template and drill four 9/32" dia. holes in the fender.

2. Secure the Bracket to the fender with four 1/4" x 3/4" screws, lock washers and hex nuts.

3. Mount the Control Box to the Mounting Bracket, using four 1/4" x 5/8" screws and lock washers and eight flat washers.

4. Route the **red** cable from the Control Box to connect it to the **positive (+)** post on the Tractor's battery, or the **positive** post on the Tractor's starter solenoid. See FIG. 2.

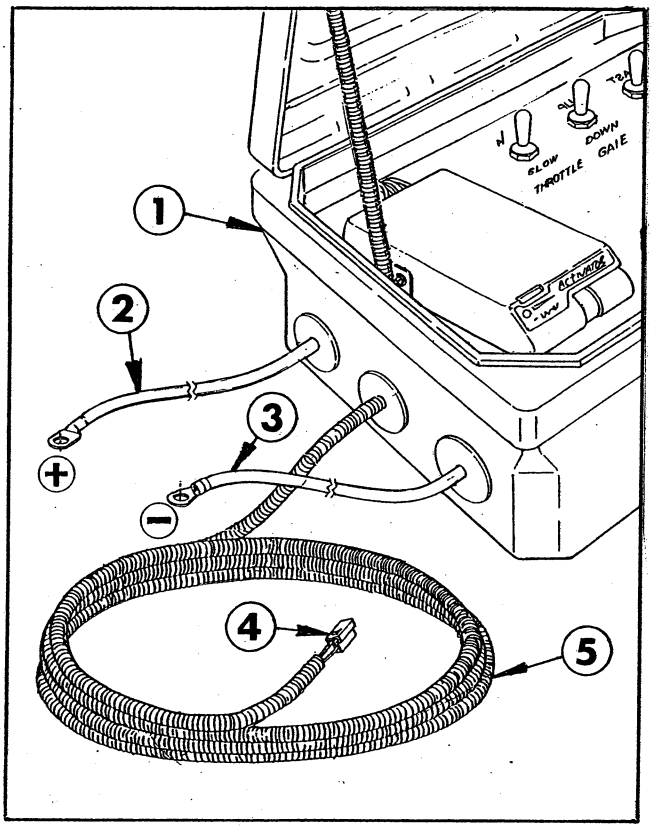

FIG. 2

1. Electric Control Box
2. Battery Cable (+)
3. Battery Cable (-)
4. Brake Switch Connector
5. Brake Switch Wiring Harness

5. Route the **black** cable from the Control Box to connect it to the **negative (-)** post on the Tractor's battery, or to Tractor's frame if the Tractor is frame grounded.

IMPORTANT! Reversing the polarity of these connections will cause serious damage to the Brake Controller!

Be especially careful when routing the Battery Cables, to prevent the Cables from coming in contact with any sharp edges or "pinch" points.

©The Toro Company-1994
All Rights Reserved

BRAKE SWITCH:

The Brake Switch is to be installed so that when the towing Tractor's brakes are **disengaged**, the button on the Switch is **depressed** approximately 1/8 inch. When the Tractor's brakes are **engaged**, the Switch button must be **released** for it's full length.

1. Use the Brake Pedal Lock to lock the towing Tractor's Brake Pedals together. See FIG. 3.

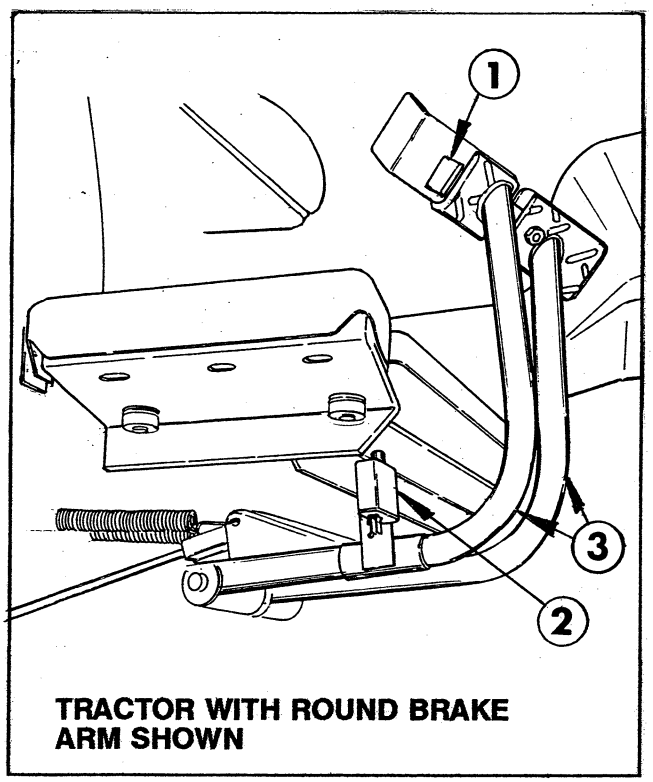

TRACTOR WITH ROUND BRAKE ARM SHOWN

FIG. 3

1. Brake Lock
2. Brake Switch
3. Brake Arms (Round)

2. Determine the location under the Tractor's floor plate that provides the best surface to activate the Brake Switch.

The installation of the Brake Switch will depend on the shape of the towing Tractor's brake pedal arm.

If the Arm is round, use the Mounting Bracket Assembly. If the arm is rectangular, use the two Mounting Straps as shown in FIG. 4.

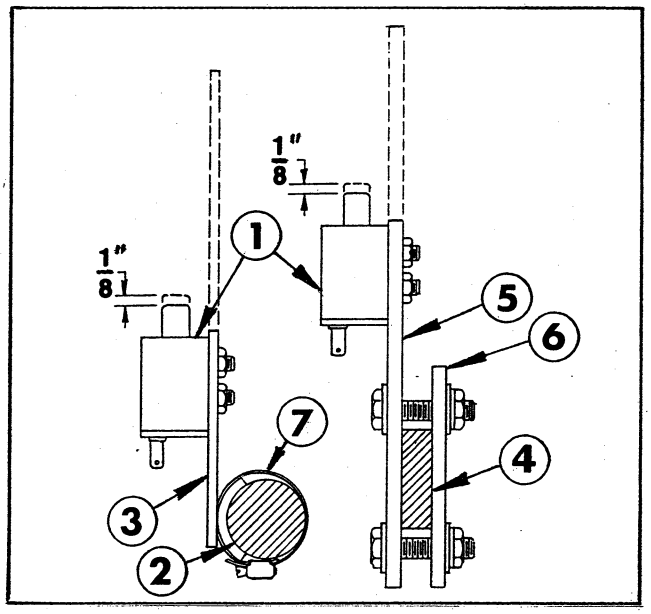

FIG. 4

1. Brake Switch
2. Brake Arm (Round)
3. Mounting Bracket Assembly
4. Brake Arm (Rectangular)
5. Mounting Strap (Long)
6. Mounting Strap (Short)
7. Hose Clamp

3. Estimate the length of the Mounting Strap required and cut it to that length.

4. Experiment to determine the best location for mounting the Brake Switch, to achieve the correct activation.

A. When Tractor's Brakes are **disengaged** - the Brake Switch button is **depressed.**

B. When Tractor's Brakes are **engaged** - the Brake Switch button is **released.**

5. Secure the Brake Switch to the Mounting Strap with two #10 screws, lock washers and hex nuts.

6. If the Tractor's Brake Arm is round, secure the Mounting Bracket Assembly to the Brake Arm with the two hose clamps provided. See FIG. 4.

If the Tractor's Brake Arm is rectangular, place a Mounting Strap on each side of the Brake Arm. **NOTE:** The slots in the Straps allow them to be adjusted so that the Brake Switch button is perpendicular to the Tractor's floor plate. Secure the Straps to the Brake Arm with two 1/4" x 1-1/4" screws, lock washers, hex nuts and four flat washers.

7. Route the Brake Switch Wiring Harness from the Control Box, through hole in Tractor's floor plate, along the Brake Arm and connect it to the Brake Switch. See FIG. 5.

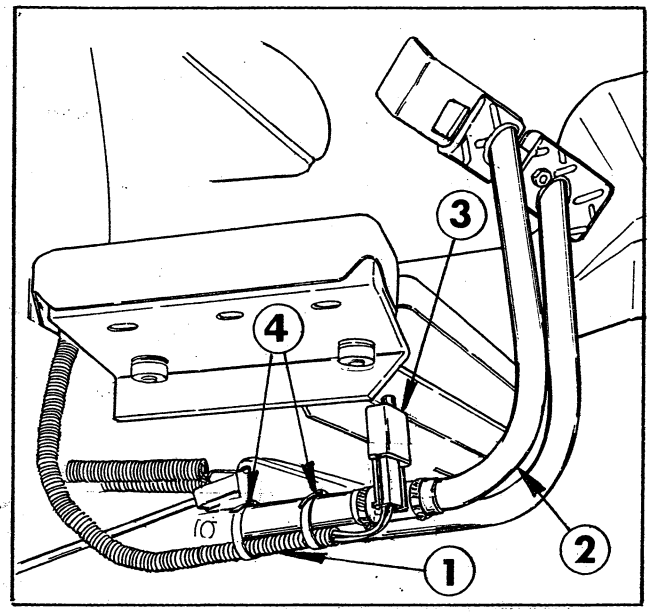

FIG. 5

1. Wiring Harness
2. Brake Arm
3. Brake Switch
4. Plastic Tie

IMPORTANT! Be especially careful when routing the Wiring Harness to prevent the Wiring from coming into contact with any sharp edges or "pinch" points.

8. Secure the Wiring Harness to the Brake Arm with plastic ties provided.

TO CHECK THE BRAKE SWITCH INSTALLATION:

1. Depress the towing Tractor's brake pedals.

2. Check to make sure the red indicator light on the Electric Brake Controller glows. See FIG. 6.

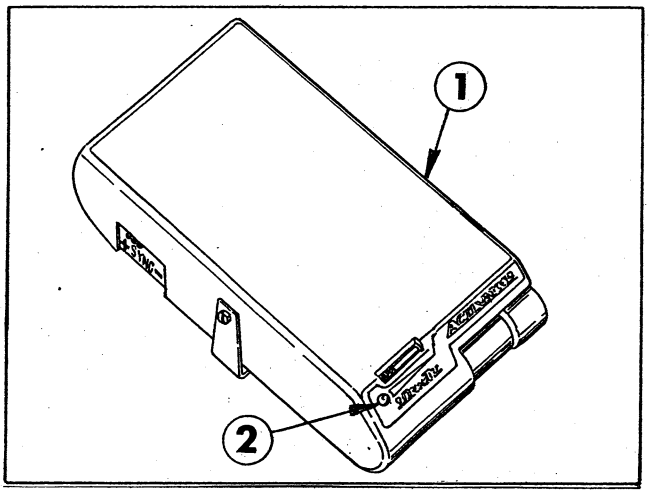

FIG. 6

1. Electric Brake Controller
2. Indicator Light



Helping you put quality into play.™