FORM NO. 93-0640

TORO

MODEL NO. 41020-40001 & UP
MODEL NO. 41021-40001 & UP
MODEL NO. 41128-40001 & UP
MODEL NO. 41190-40001 & UP

OPERATOR'S MANUAL

INJECTOR PRO™

for the MULTI-PRO™ 1100 VEHICLE

To assure maximum safety, optimum performance, and to gain knowledge of the product, it is essential that you or any other operator of this equipment read and understand the contents of this manual before the vehicle engine is ever started. Pay particular attention to the SAFETY INSTRUCTIONS highlighted by this symbol—

The safety alert symbol means CAUTION, WARNING, or DANGER — personal safety instruction. Failure to comply with the instruction may result in personal injury.

SAFETY INSTRUCTIONS

Keep this Operator's Manual in the plastic tube behind the operator seat.

It is very important that all persons operating this equipment have easy access to these instructions at all times.

Carefully read and follow the Set-up Instructions that are provided with this equipment and the Safety Instructions in the Multi-Pro™ 1100 Operator's Manual.

RECOGNIZE SAFETY INFORMATION

This safety-alert symbol calls attention to a **dangerous** situation, which could result in serious injury or death to the operator or a bystander.

Safety, mechanical and some general information in this manual are emphasized. **DANGER, WARNING** and **CAUTION** identify safety messages. Whenever the triangular safety symbol appears, it is followed by a safety message that must be read and understood. For more details concerning safety, read the Safety Instructions that follow. **IMPORTANT** identifies special mechanical information and **NOTE** identifies general information worthy of special attention.

These instructions are provided as a guide for the safe operation and maintenance of this equipment. However, the operator's personal safety, as well as those persons in the work area, will depend on the careful actions and good judgement of the operator.
To reduce the potential for injury or death, comply with the following safety instructions.

BEFORE OPERATING:

1. Operate this machine only after reading and understanding the contents of this manual. A replacement manual is available by sending complete model and serial number to: Hahn, Inc., 1625 N. Garvin, Evansville, IN. 47711.

2. Learn how to operate the InJector Pro™ and how to use the controls properly. DO NOT let anyone operate this equipment without first receiving thorough instructions.

3. Keep all shields, safety devices and decals in place. If a shield, safety device or decal is malfunctioning, illegible or damaged, repair or replace it before operating the machine.

4. Chemicals can injure persons, animals, plants, soils or other property. To eliminate environmental damage and personal injury:

A. Obtain proper training before using or handling chemicals.

B. Select the proper chemical for the job.

C. Follow manufacturer's instructions on chemical container labels. Apply and handle chemicals as recommended.

©The Toro Company-1994
All Rights Reserved

D. Handle and apply chemicals with care. Wear goggles and other necessary protective equipment. Handle chemicals in well ventilated areas. Never smoke while handling chemicals.

E. Properly dispose of chemical container and unused chemicals.

⚠ WARNING

- **To avoid electric shock and personal injury to bystanders.**
- **Inspect area overhead for wires before raising Booms.**
- **Keep bystanders away while raising and lowering Booms.**

SAFETY AND INSTRUCTION DECALS

The following safety and instruction decals are installed on the Injector Pro™. If any become damaged or illegible, replace them. Decals and part numbers are listed below and in the parts catalog. Order replacements from your Authorized Toro Distributor.

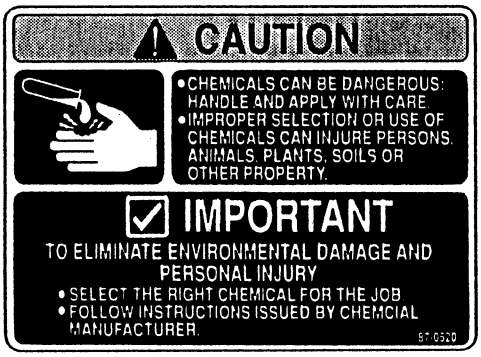

Part No. 87-0520: Located on Lid of Carrier Tank.



Part No. 93-0799: Located on Dash Panel around Warning Light.

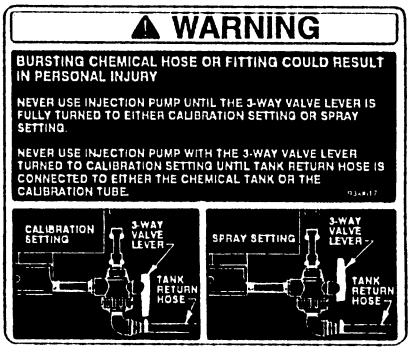

Part No. 93-0617: Located on top of Injection Pump Box.

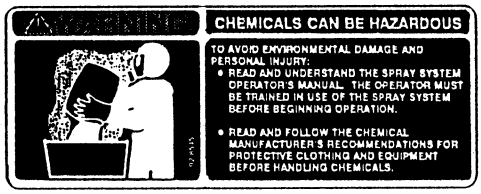

Part No. 92-8545: Located on front of Injection Pump Box next to Part No. 92-8543.



Part No. 88-8950: Located inside Injection Pump Box.

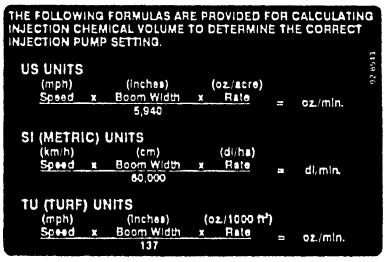

Part No. 92-8543: Located on front of Injection Pump Box next to Part No. 92-8545.

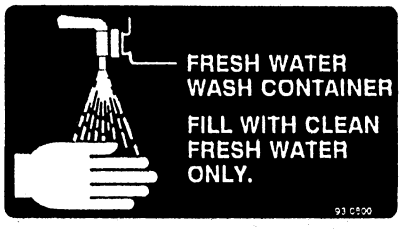

Part No. 93-0800: Located on side of Clean Water Wash Tank Saddle.

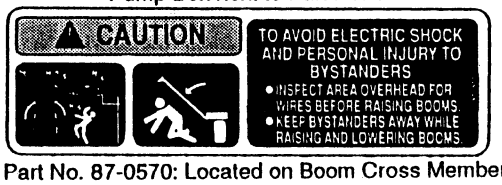

Part No. 87-0570: Located on Boom Cross Member.



Part No. 36-3400: Located in front of Injection Pump Box and Injection Tank on shelf.



Part No. 75-5190: Located in front of Injection Pump Box and Injection Tank on shelf.

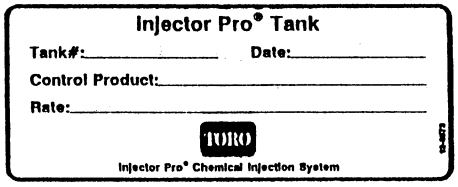

Part No. 92-8572 (White), 92-8573 (Yellow), 92-8574 (Green) and 92-8575 (Blue): Located on front of Injection Tank.



Part No. 87-0450 Located on top of Injection Pump Box above Part No. 93-0617.

INTRODUCTION

The Toro InJector Pro™ Spray System is designed to improve the accuracy and uniformity of spray applications. Its performance relies on the installation and preventive maintenance of the complete sprayer. It is important that this Installation and Service Manual be reviewed thoroughly before operating the system. This Manual provides a simple step-by-step procedure for installing and operating the Toro InJector Pro™ Spray System.

The System consists of a computer based control Console, a Speed Sensor, one or two Injection Modules (each includes a Motor Control and Metering Pump with sensors), and Inline mixer and cables. The Speed Sensor is mounted on a wheel of the vehicle. The Injection Module mounts to the framework of the sprayer. The Inline Mixer mounts just before the Boom On/Off Valves. Appropriate cabling is furnished for installation.

The operator sets the target application rate for each chemical to be sprayed and the InJector Pro™ automatically maintains the flow regardless of vehicle speed or gear selection. A manual override switch allows the operator to manually control flow for each chemical for spot spraying. Actual volume per area being applied is displayed at all times for both chemicals. The InJector Pro™ additionally functions as an area monitor, speed monitor, and volume totalizer.

CONTROLS and OPERATION

BEFORE OPERATION:
Check all of your equipment...make certain that all components are clean...including the Tank, Pump, Control Valves, Strainers, Check Valves, Hoses, Nozzles, Spray Tips and Suction Line Strainer.

NOTE: "Right", "Left", "Front" and "Rear" are referenced while seated in the operator's position.

PUMP ENGAGEMENT LEVER (FIG. 1): Pivot the pump engagement lever DOWN to lower the centrifugal pump and ENGAGE the drive belt. Pull the lever UP to DISENGAGE the drive belt.

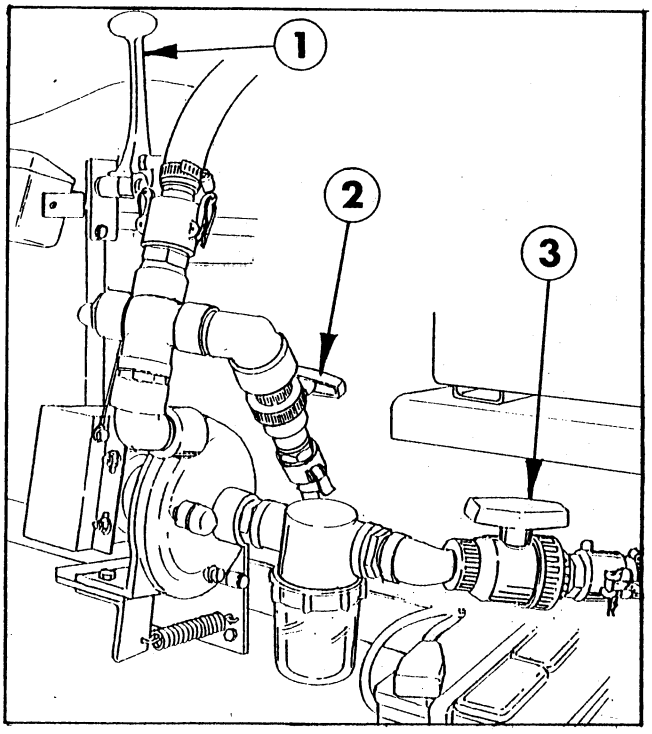

Fig. 1
1. Pump Engagement Lever
2. Jet Agitator Valve Handle
3. Suction Valve Handle

JET AGITATOR VALVE HANDLE (FIG. 1): Opens and closes the Agitator Valve to activate, adjust or stop the agitation of the spray solution in the Tank. Jet Agitator is only necessary when using liquid fertilizer, spray adjuvant or some other additive to the Carrier Tank.

SUCTION VALVE HANDLE (FIG. 1): Opens and closes the Suction Line Valve. Close to hold water in Sprayer Tank during maintenance to the Suction Line Strainer or Centrifugal Pump.

IMPORTANT! The Pump will be damaged if it is activated with the Suction Line Valve closed, or before it is filled completely with water.

CONSOLE COMPUTER: Receives data for desired rate of application and automatically maintains that rate.

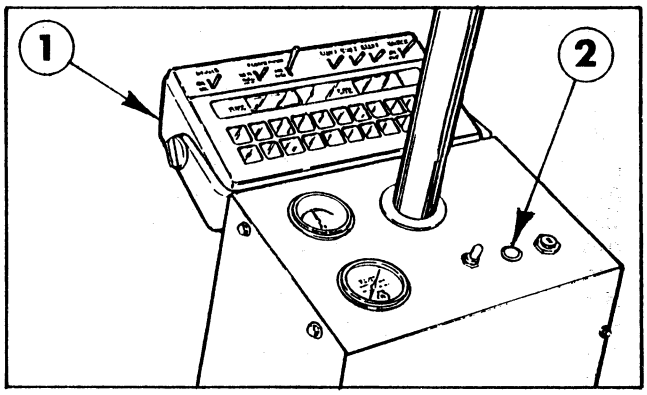

Fig. 2
1. Console Computer
2. Pump Pressure Warning Light

NOZZLE SELECTION:
To achieve the desired Carrier rate from your InJector Pro™ (as indicated on the chemical container label) the proper capacity Nozzles must be installed.

To select the proper Nozzle, you need to know:

- Carrier rate in gallons per acre.
- The desired Sprayer speed in miles per hour.
- The nozzle spacing (standard spacing is 20 inches.)

Next, refer to the Nozzle Charts in the sprayer catalog provided, for selecting the proper size nozzles to deliver the correct application rate at a chosen speed within a desired pressure range.

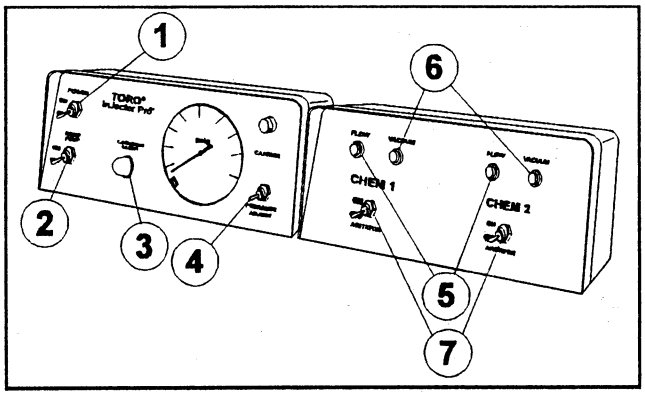

Fig. 3

1. Power Switch
2. Rinse Pump Switch
3. Pump Pressure Sensor
4. Pressure Adj. Switch
5. Injection Pump Flow Warning Light
6. Injection Pump Vacuum Warning Light
7. Optional Agitator Switch

PUMP PRESSURE WARNING LIGHT (FIG. 2): Flashes when pump pressure drops below 10 PSI.

POWER SWITCH (FIG. 3): Turns the Carrier Control Box on and off.

RINSE PUMP SWITCH (FIG. 3): Turns Electric Pump on and off.

PUMP PRESSURE SENSOR (FIG 3): Goes out when pump pressure drops below 10 PSI.

IMPORTANT! If Pump Pressure Warning Light flashes while Pump is engaged, turn off Master Boom Switch and disengage Pump immediately. Determine and correct problem before continuing operation.

IMPORTANT! Concentrated Chemicals can seriously damage turf and the environment. If Centrifugal Pump stops pumping while Injection Pump is running. Concentrated chemical will be pumped out of the Booms. Watch Pump Pressure Warning Light closely. If it begins flashing turn off Master Boom Switch and disengage Centrifugal Pump.

PRESSURE ADJUSTMENT SWITCH (FIG 3): Raises and lowers the Carrier pressure.

INJECTION PUMP FLOW WARNING LIGHT (FIG 3): Goes out when Injection Pump pressure is lost.

INJECTION PUMP VACUUM WARNING LIGHT (FIG 3): Goes out when Injection Pump vacuum is above operating range. This can be caused by a clogged line or Strainer.

OPTIONAL AGITATOR SWITCH (FIG 3): Turns on and off Agitator. (only used with optional Agitator).

GENERAL INFORMATION

SYMBOL DEFINITION

GPM	- Gallons per minute
lit/min	- Liters per minute
dl/min	- Deciliter per minute
PSI	- Pounds per square inch
kPa	- Kilopascal
GPA	- Gallons per acre
lit/ha	- Liter per hectare
ml/ha	- Milliliter per hectare
GPK	- Gallons per 1,000 sq. ft.
mm	- Millimeters
cm	- Centimeters
dm	- Decimeters
m	- Meter
MPH	- Miles per hour
km	- Kilometers
km/h	- Kilometers per hour
US	- Volume per ACRE
SI	- Volume per HECTARE
TU	- Volume per 1,000 sq. ft.
[]	- Metric numbers
{}	- 1,000 sq. ft. numbers

LIQUID CONVERSIONS

U.S. Gallons x 128 = Fluid Ounces
U.S. Gallons x 3.785 = Liters
U.S. Gallons x 0.83267 = Imperial Gallons
U.S. Gallons x 8.34 = Pounds (Water)

LENGTH

1 millimeter (mm) = 0.039 inch
1 centimeter (cm) = 0.393 inch
1 meter (m) = 3.281 feet
1 kilometer (km) = 0.621 mile
1 inch = 25.4 millimeters; 2.54 centimeters
1 mile = 1.609 kilometers

PRESSURE

1 psi = 6.89 kPa

AREA

1 square meter = 10.764 sq. feet
1 hectare (ha) = 2.471 acres; 10,000 sq. meters
1 acre = 0.405 hectare; 43,560 sq. ft.
1 sq. mile = 640 acres; 258.9 hectares

CONSOLE FEATURES

Selects Flush (Off), Manual or fully Automatic control.

POWER - Turns Console OFF or ON. Turning Console OFF does not affect data stored.

Manual override control provides capability for spot spraying.

Booms can be controlled individually, or all at once with MASTER ON/OFF Switch.

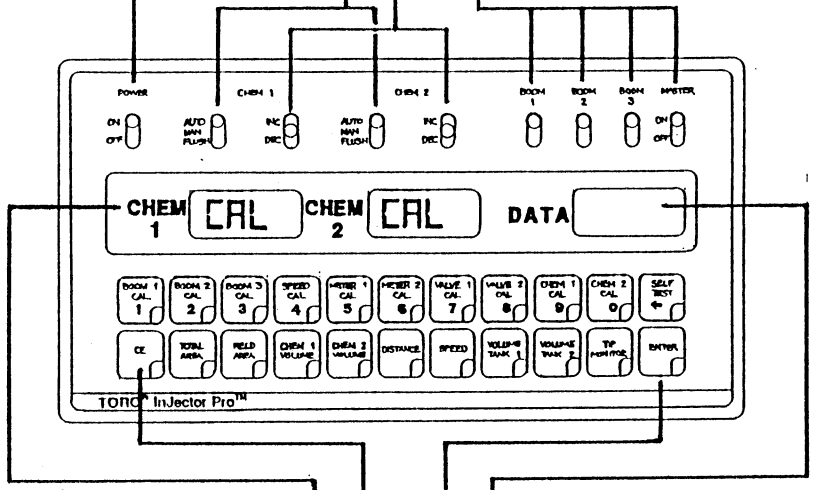

Displays actual Rate of Application.

Displays function and calibration data.

CE - Use like you do the CE key on a calculator.

ENTER - Used only to enter data into the Console.

CALIBRATION KEYS - Used to enter data into the Console to calibrate the system.

BOOM 1 CAL	Swath of Boom 1
BOOM 2 CAL	Swath of Boom 2
BOOM 3 CAL	Swath of Boom 3
SPEED CAL	Determined by Speed Sensor
METER 1 CAL	Injection Pump 1 Calibration Number
METER 2 CAL	Injection Pump 2 Calibration Number
VALVE 1 CAL	Injection Pump 1 Response Time
VALVE 2 CAL	Injection Pump 2 Response Time
CHEM 1 CAL	Target Application Rate
CHEM 2 CAL	Target Application Rate
SELF TEST	Simulates vehicle speed

FUNCTION KEYS - Used to display data.

TOTAL AREA	Total Area Sprayed
FIELD AREA	Field Area Sprayed
CHEM 1 VOLUME	Chem 1 Volume Applied to Field
CHEM 2 VOLUME	Chem 2 Volume Applied to Field
DISTANCE	Distance Traveled
SPEED	Speed of Vehicle
VOLUME TANK 1	Volume Remaining in Chem 1 Injection Module Tank
VOLUME TANK 2	Volume Remaining in Chem 2 Injection Module Tank

IMPORTANT: This Console requires selection of area measurement in **US** (acres); **SI** [hectares] or **TU** {1,000 sq. ft.} and type of speed sensor **SP1** (wheel drive, etc.) or **SP2** (radar) speed sensor. (The Toro InJector Pro™ uses the SP1 wheel drive sensor.)

CONSOLE FEATURES

OTHER DISPLAYS

1. To display TOTAL AREA covered, momentarily depress key labeled: TOTAL AREA
To "zero out" this total at any time, enter a "0" in this key.

2. To display FIELD AREA covered, momentarily depress key labeled: FIELD AREA
To "zero out" this total at any time, enter a "0" in this key.

3. To display OUNCES [dl] of CHEMICAL 1 sprayed, momentarily depress key labeled: CHEM 1 VOLUME
To "zero out" this total at any time, enter a "0" in this key.

4. To display OUNCES [dl] of CHEMICAL 2 sprayed, momentarily depress key labeled: CHEM 2 VOLUME
To "zero out" this total at any time, enter a "0" in this key.

5. To display DISTANCE (feet [m]) traveled, momentarily depress key labeled: DISTANCE
To "zero out" this total at any time, enter a "0" in this key.

6. To display MPH [km/h], momentarily depress key labeled: SPEED

7. To display VOLUME in INJECTION MODULE TANK 1, momentarily depress key labeled: VOLUME TANK 1
This value needs to be re-entered every chemical is added.

8. To display VOLUME in INJECTION MODULE TANK 2, momentarily depress key labeled: VOLUME TANK 2
This value needs to be re-entered every chemical is added.

9. The TIP Monitor button is not used on the Toro InJector Pro™ Spray System.

CONSOLE ALARM FEATURE

Console alarm sounds if application rate is 30% or more away from target application rate for 5 seconds.

1. Displaying A on or A off.

a. Depressing BOOM 1 CAL 1 for 5 seconds Displays A on (alarm on) or A off (alarm off).

2. Selecting A on or A off.

a. To select A on or A off step with CE until desired code is displayed in Data display.

b. Depressing any other key will lock that selection.

SEQUENCE TO ACTIVATE DATA-LOCK*

1. Depress CE for 5 seconds, NEW CODE will appear.

2. Enter 4 digit code within 15 seconds.
EXAMPLE: For 1058 depress:
BOOM 1 CAL 1, CHEM 2 CAL 0, METER 1 CAL 5, VALVE 2 CAL 8 and ENTER

SEQUENCE TO CHANGE DATA-LOCK

1. Depress CE for 5 seconds, OLD CODE message will appear.

2. Enter 4 digit code within 15 seconds.

NEW CODE message will appear. Enter 4 digit code within 15 seconds. **EXAMPLE:** For 1258, depress: BOOM 1 CAL 1, BOOM 2 CAL 2, METER 1 CAL 5, VALVE 2 CAL 8 and ENTER

ENTER MODE SEQUENCE WITH ACTIVATED DATA-LOCK

1. Depress the key into which you wish to enter data.

2. Depress ENTER, CODE message will appear. Enter your DATA LOCK CODE. If code is correct, "E" will appear. Now enter data normally.

* The DATA LOCK feature prohibits the entry of data without first entering the DATA LOCK CODE. If DATA LOCK is not desired, omit 5, 6, 7. The DATA LOCK CODE may be cleared by entering a code of "0" or by removing Console power.

BEFORE SPRAYING

CONSOLE CALIBRATION

CALCULATING "BOOM CAL" (Boom 1, Boom 2, Boom 3)

Boom cal is calculated by multiplying the number of spray tips times the tip spacing. For the Toro Injector Pro™, having nozzles at 20" spacing, the Console should be programmed as follows: "Boom 1 (left)" - 80: "Boom 2 (center)" - 60: "Boom 3 (right)" - 80.

CALCULATING "SPEED CAL"

1. Place chalk mark or tape on vehicle tire, on which Speed Sensor is mounted. See FIG. 4

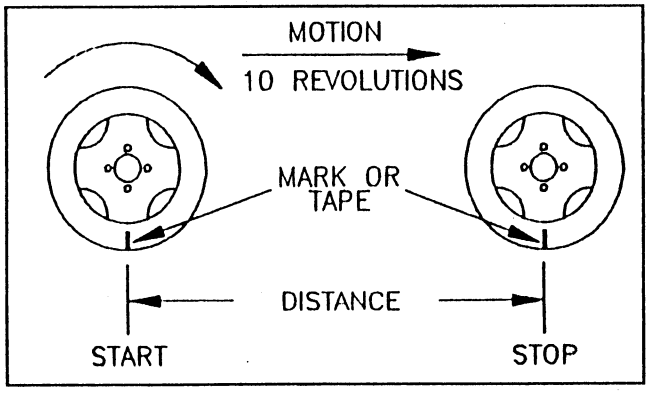

Fig. 4

2. Mark initial spot on the ground.

3. Drive vehicle straight ahead counting 10 revolutions of the wheel with the mark stopping at the same position as starting.

4. Measure distance from start mark in inches. [Centimeters]. (Round off fractions).

5. Write down this SPEED CAL calibration number for future reference when programming the Console.

NOTE: This measurement is critical to the performance of the Toro InJector Pro™ Spray System. MEASURE CAREFULLY. Be sure tire is properly inflated before measuring. Measure tire in type of soil in which you will be spraying and with Carrier Tank one half full. Circumference of tire will vary when measured in soft soil versus hard packed soil. For best results, measure several times and average the results. Re-measure periodically.

DETERMINING PUMP SETTING

NOTE: Figures used in the following formulas are for ounces per acre. Ounces per 1000 sq. ft. are indicated by { }, Deciliter per Hectare are indicated by [ ].

The following step by step procedure determines the correct Pump Setting for an Injection Pump.

1. Calculate volume per minute (oz./min.) [dl/min] of chemical required by using the following formula.

vol./min =

$$\frac{\text{Speed} \times \text{Boom Width (in ins.)} \times \text{Rate (in oz. or dl)}}{5{,}940\ [60{,}000]\ \{137\}}$$

Speed =

Average Spray Speed in MPH [km/h]

Boom Width =

Number Minimum Spraying Nozzles x Nozzle Spacing in inches [cm]

Rate =

Recommended Chemical Application Rate in Ounces per Acre [dl/ha] {oz. 1,000 sq. ft.}

EXAMPLE:
US UNITS

Speed =

4 MPH

Boom Width =

11 Nozzles x 20 Inches/Nozzle = 220 Inches

Rate =

11.25 Pints/Acre x 16 oz./Pint = 180 oz./Acre

Oz./Min. =

$$\frac{4 \text{ MPH} \times 220 \text{ In.} \times 180 \text{ Oz./Acre}}{5{,}940} = 26.7$$

SI (METRIC UNITS)

Speed =

6.5 km/h

Boom Width =

11 Nozzles x 50 cm/Nozzles = 550 cm

Rate =
13 lit/ha x 10 dl/liter = 130 dl/ha

dl/min

$$\frac{6.5 \text{ km/h} \times 550 \text{ cm} \times 130 \text{ dl/ha}}{60{,}000} = 7.75$$

TU (TURF) UNITS

Speed =

4 MPH

BEFORE SPRAYING

Boom Width =

11 Nozzles x 20 Inches = 220 Inches

Rate =

4 oz./1,000 sq. ft.

Oz./Min. =

$$\frac{4 \text{ MPH} \times 220 \text{ In.} \times 4 \text{ oz./1,000 sq. ft.}}{137} = 25.7$$

2. See the Ultra Low Volume Pump Output Chart FIG 6.

3. Locate the calculated Oz./Min. [dl/min] on the horizontal line of Pump Chart. (Example: 6.8 Oz./Min. [2.0 dl/min] for Ultra Low Volume module (see FIG. 6).

4. Draw a vertical line from this point to the Highest Pump Setting which exceeds minimum pump output requirements.

5. The Pump Setting number for this calculation is shown on the left hand side of the chart. (Example: 27.6 oz./min. [0.7 dl/min] = 10 for US & SI UNITS and {25.7 oz./min.} = 10 for TU UNITS).

6. When two Injection Modules are used, repeat this calculation for the second Injection Pump.

ADJUSTING PUMP SETTING

1. Remove the Pump Box Lid to reveal the Pump Setting Wheel.

2. Loosen the Pump-setting Lock Nut, pull out on Locking Pin, and rotate the 2-10 Index Line to the proper number. See FIG. 5

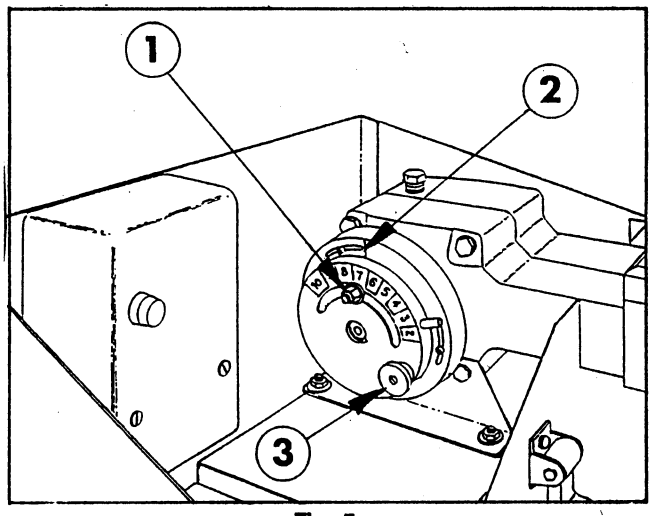

Fig. 5

1. Pump Setting Lock Nut
2. Index Line
3. Locking Pin

3. Tighten the pump setting lock nut taking care to keep in index line on the number.

CAUTION: An error in positioning the setting will result in an error in chemical application!

⚠ WARNING

- **Moving parts can cause personal injury.**
- **Keep all Shields in place.**
- **Disengage and shut off engine before servicing machine.**
- **Keep hands, feet and clothing away from power-driven parts.**

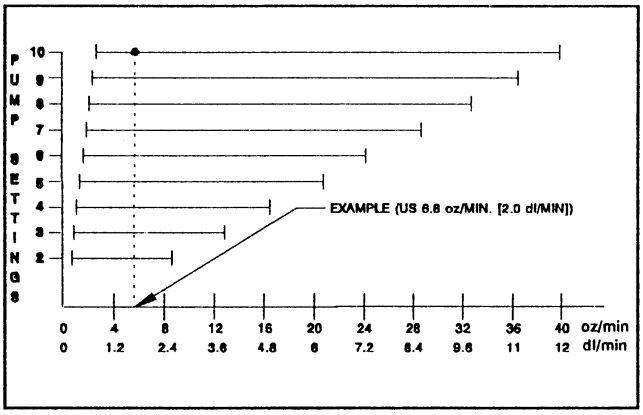

Fig. 6

DETERMINING "METER 1 CAL AND METER 2 CAL"

Use the calibration tag attached to the injection pump (reproduced in FIG. 7) to determine the METER 1 CAL and METER 2 CAL.

NOTE: The Toro Injector Pro™ uses the Ultra-Low Meter Cal only.

PUMP CALIBRATION

SETTINGS	HI-VOLUME METER CAL oz(dl)	ULTRA-LOW METER CAL oz(dl)
2	275(930)	2750(9300)
3	183(618)	1830(6180)
4	138(466)	1380(4660)
5	110(372)	1100(3720)
6	92(311)	920(3110)
7	79(267)	790(2670)
8	69(233)	690(2330)
9	61(206)	610(2060)
10	55(186)	550(1860)

PUMP MUST BE PRIMED (SEE REVERSE SIDE)

Fig. 7

BEFORE SPRAYING

1. Using the Pump Setting Number determined earlier, (DETERMINING PUMP SETTING), locate the Meter Cal number that corresponds to this setting. Example: For Pump Setting 5 the Meter Cal number is 1100 [3720].

2. Write down this Meter Cal calibration number for future reference when programming the console.

3. If two Injection Pumps are used, Determine the Meter Cal for second pump.

CALCULATING "VALVE 1 AND VALVE 2 CAL"

1. The initial Valve calibration number for VALVE 1 CAL is 2611. The VALVE CAL number is used to control response time of the Motor Valve to the change in vehicle speed. After operating the system, you may desire to refine this number. See definitions below:

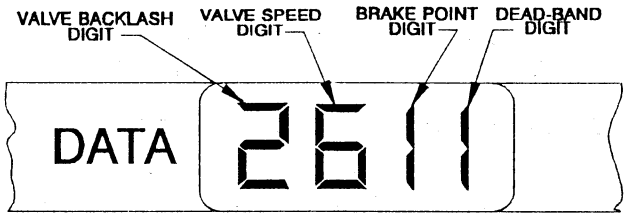

Valve Backlash -
Controls the time of the first correction pulse after a change in correction direction is detected **(Inc to Dec or Dec to Inc)**.

Range: 1 to 9 1 - Short Pulse, 9 - Long Pulse

Valve Speed Digit -
Controls response time of Control Valve motor. **CAUTION: Running the Control Valve too fast will cause the system to oscillate.**

Range: 1 to 9 1 - Slow, 9 - Fast

Brake Point Digit -
Sets the point at which the Control Valve motor percent begin braking, so as not to over shoot the desired rate. Digit is percent away from target rate.

Range: 0 to 9 0 = 5%, 1 = 10%, 9 = 90%

Dead-Band Digit -
Allowable difference between target and actual application rate, where rate correction is not performed.

Range: 1 to 9 1 = 1%, 9 = 9%

CONSOLE PROGRAMMING

When entering data into the console, the entry sequence is always the same. **(NOTE: DATA MUST BE ENTERED INTO THE FIRST TEN KEYS).**

1. Depress the key in which you wish to enter data.

2. Depress the "ENTER" key. An "E" will illuminate in the DATA display.

3. Depress the keys corresponding to the number you wish to enter (i.e., "1", "0", "2", "4",). The numbers will be displayed in the DATA display as they are entered.

4. Complete the entry by again depressing the "ENTER" key.

INITIAL CONSOLE PROGRAMMING

When you first turn on Console power, after all installation procedures have been completed, the Console will flash "CAL" in the CHEM 1 and CHEM 2 displays. This means you must "calibrate" or program the Console before it can be operated. (This is a one-time operation which does not have to be repeated unless you disconnect your battery wires. Turning OFF the POWER ON/OFF Switch does not affect the Console memory. All data is retained.)

The following steps must be followed:

If an entry selection error is made during steps 1,2,3, and 4, the Console can be reset by depressing [CLEAR] for 20 seconds (data displays US.)

1. Display US (acres), SI (hectares), or TU (1000 sq. ft.)

a. Depressing momentarily [CE] steps the DATA display from US (acres) to SI.

b. Depressing momentarily [CE] steps the DATA display from SI (Hectares) to TU.

c. Depressing momentarily [CE] steps the DATA display from TU (1,000 sq. ft.) to US.

2. Selecting US, SI or TU

a. To select US, SI or TU, step [CE] until the desired code is displayed in DATA display.

b. Momentarily depress [ENTER]. The DATA display will now display SP1.

3. Display SP1 or SP2 (Toro InJector Pro uses only wheel drive SP1).

a. Depressing momentarily [CE] steps the DATA display from SP1 (wheel drives, etc.) to SP2.

b. Depressing momentarily [CE] steps the DATA display from SP2 (Radar Sensor) to SP1.

4. Selecting SP1 or SP2.

a. To select SP1 or SP2, step with [CE] until desired code is displayed in DATA display.

b. Momentarily depress [ENTER] the DATA display will now display 0.

5. Enter BOOM 1 CAL (80) in key labeled: [BOOM 1 CAL 1]

6. Enter BOOM 2 CAL (60) in key labeled: [BOOM 2 CAL 2]

7. Enter Boom 3 CAL (80) in key labeled: [BOOM 3 CAL 3]

8. Enter SPEED CAL in key labeled: [SPEED CAL 4]

9. Enter METER 1 CAL calibration number in key labeled: [METER 1 CAL 5]

10. Enter METER 2 CAL calibration number in key labeled: [METER 2 CAL 6]
If there is only one Injection Module used, enter "0".

11. Enter VALVE 1 CAL calibration number (2611) in key labeled: [VALVE 1 CAL 7]

12. Enter VALVE 2 calibration number (2611) in key labeled: [VALVE 2 CAL 8]
If there is only one Injection Module used, enter "0".

13. Enter CHEM 1 CAL Oz./Acres [dl/ha] {1000 sq. ft.} Target Application Rate in key labeled: [CHEM 1 CAL 9]

NOTE: A decimal point is displayed automatically. Therefore, twenty ounces per acre is entered as 20.0, not 2.0.

14. Enter CHEM 2 CAL Oz./Acre [dl/ha] {1000 sq.ft.} Target Application Rate, in key labeled: [CHEM 2 CAL 0]
If there is only one Injection Module used, you must perform the following two steps to complete Initial Programming:

1. Enter "1.0" for CHEM 2 CAL.
2. Re-enter "0" for CHEM 2 CAL.

YOU HAVE NOW COMPLETED PROGRAMMING THE CONSOLE.

The flashing "CAL" will now extinguish. If not, repeat procedure starting at Step 5.

INITIAL SYSTEM SET-UP

1. Fill main carrier tank and two Injection Module Tanks with **water** and fully open Carrier Suction Line Valve.

2. Run the Centrifugal Pump at normal operating RPM and set the Pressure Relief Valve to normal operating pressure.

3. Place the valve handles on the Injection Pumps to "calibration" positions. (See FIG. 8, Page 12).

4. Place MASTER ON/OFF switch to ON and BOOM ON/OFF switches to OFF.

5. Place CHEM 1 and CHEM 2 FLUSH/MAN/AUTO switches to FLUSH.

6. Place POWER ON/OFF switch to ON.

7. Verify correct Boom Widths, Speed Calibration, Meter Calibrations, Valve Calibrations, and Chem Calibrations have been entered in Console.

8. Verify that each Boom On/Off Valve operates and that no nozzles are plugged by operating BOOM ON/OFF switches. (Master ON/OFF switch must be ON).

9. Place all BOOM ON/OFF switches ON.

10. Enter a SELF TEST speed equal to that of normal operating speed, verify entry by displaying speed (4 MPH [6.5 km/h] is recommended). (See SELF TEST FEATURE).

11. Place CHEM 1 - FLUSH/MAN/AUTO switch to MAN, the CHEM 1 display should display a reading.

12. Verify that by operating the CHEM 1 - INC/DEC switch, that CHEM 1 can be varied over a wide range above and below the desired application rate in oz./acre [dl/ha]. Then, set CHEM 1 for normal oz./acre [dl/ha] of application.

13. Repeat steps 11 and 12 for CHEM 2. If two Injection Systems are used.

14. Place CHEM 1 and CHEM 2 - FLUSH/MAN/AUTO switches to AUTO. The system will seek the programmed CHEM 1 and CHEM 2 cal rates.

BEFORE SPRAYING

15. Enter a SELF TEST speed 2 MPH [3.2 km/h] greater than that initially programmed (6.0 MPH [9.7 km/h]). The system will automatically correct for this speed variation.

16. Turn one BOOM ON/OFF switch to OFF position. The system will automatically correct for this change in boom lengths. Note that the boom pressure increases only slightly.

17. Drain water from Injection Module Tanks and add chemicals. Be sure to put Chemical 1 in the tank you have designated as Tank 1, and Chemical 2 in the Tank you have designated as Tank 2.

NOTE: Add only the chemical you need to do the job. Use the color coded Decals provided with each Tank to indicate the Tank Number, Date, Control Product and Rate used for that Tank.

NOTE: If two Injection Systems are being used the system not in use should be set on the Flush setting.

18. To verify at any time that the Injection Pump is properly calibrated, refer to the Maintenance section on Page 12.

19. Enter the estimated total volume (in ounces) [dl] in Injector Tank 1 and Injector Tank 2 in keys labeled: VOLUME TANK 1 and VOLUME TANK 2

Each time the tank is refilled, this number must be re-entered. However, entry of this data is not required for the operation of the system.

When you stop spraying and pressure rinse your Injection Tank, 3 oz. of concentrated chemical remains in your Injection Line. You can use this chemical for your last pass to eliminate waste. Use the formula below to figure the "Distance" of your last pass to leave untreated until after rinsing.

$$\frac{\text{Speed} \times 88 \times 3 \text{ oz.}}{\text{vol./min}} = \text{Distance}$$

Speed =

Average Spray Speed In MPH.

vol./min =

The value reached in the "DETERMINING PUMP SETTING" section on Page 6 & 7 in oz/min.

Distance =

The distance to leave untreated on your last pass in feet.

INJECTION PUMP PRIMING PROCEDURE

Injection Pump priming is required:

1. At initial start up.

2. If chemical tank has run empty.

3. When changing from one chemical to another.

To prime the Injection Pump, complete the following procedure.

1. Adjust the 2-10 Index Line to 10. (See FIG 5, Page 8.)

2. Position the Injection Module's Hand Valve, to the calibration position, for recirculation of chemical to Injection Module Tank.

3. Run the Injection Pump at maximum RPM for 3 minutes.

4. Return the Injection Module's Hand Valve and 2-10 Index Line to operating position.

OPERATION

USING THE SPRAYER:

IMPORTANT: Do not operate the pump dry. Damage will result to the pump seals if the pump is operated dry. Be certain the suction line valve is "OPEN" before engaging the pump.

1. Operate the vehicle engine at full (or nearly full) Throttle to provide the necessary ground speed, pressure and volume.

2. Engage the Pump and use the Master ON/OFF Switch and individual Boom Switches, to control Boom sections.

3. Regulate pressure with the Pressure Adjust Switch.

IMPORTANT! While operating vehicle pay close attention to the Injection Pump Warning Lights, Carrier Warning Light and "CHEM" Rate Displays. See FIG. 3 Page 4 and Page 5.

CLEAN WATER WASH TANK

In case of chemical contact with skin or eyes a fresh water tank has been installed on the R.H. side of the vehicle.

NOTE: Fill Clean Water Wash Tank with clean water only. Check to assure tank is full before each operation.

CLEAN WATER WASH TANK OPERATION

1. Turn Tank Spicket to on position. See FIG. 8.

2. Hold contaminated area directly under water stream.

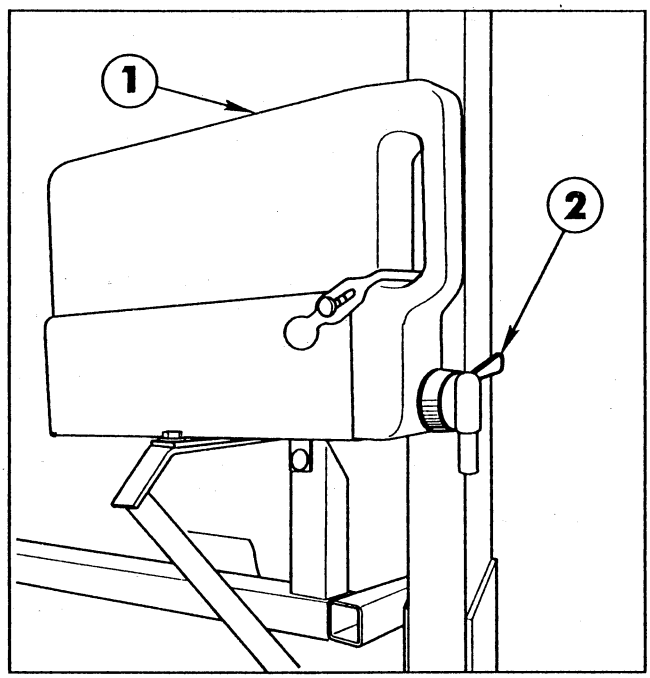

Fig. 8

1. Clean Water Wash Tank 2. Tank Spicket

AFTER SPRAYING

PRESSURE RINSING INJECTOR TANK

NOTE: Each time you complete spraying you must flush the Injector Tank(s). This will help to prevent chemical crossover and solidification.

NOTE: To further prevent chemical crossover and waste you may choose to purchase additional Injection Tanks and dedicate them to specific chemicals. Use the color coded Decals provided with each Tank to indicate the Tank Number, Date, Control Product and Rate used for that Tank. DO NOT store chemicals in Injection Tank.

1. Wipe off Rinse Hose Coupler and Coupler on top of Injection Tank.

2. Attach the Rinse Hose to the Coupler on top of the Injector Tank.

3. Set the vehicle's parking brake. Put vehicle in neutral, start the engine and run between 1400 and 1600 RPM (1200 RPM is lowest idle).

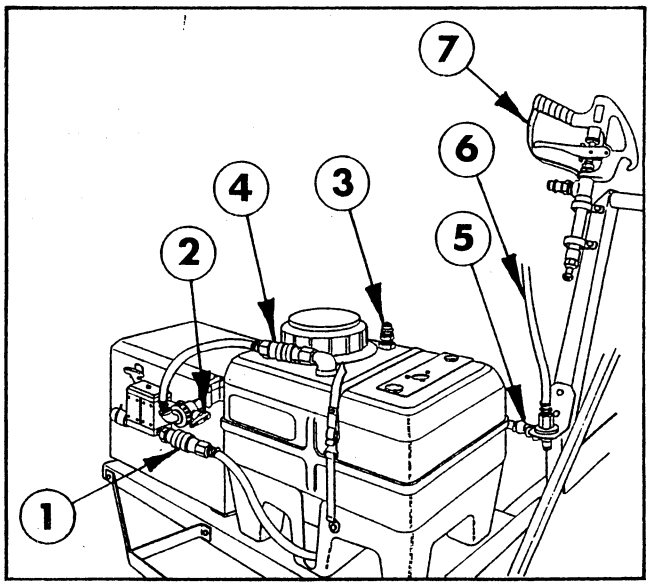

Fig. 9

1. Injection Tank Suction Hose
2. Valve Handle (in calibration position)
3. Rinse Coupler
4. Tank Return Hose
5. Rinse Hose
6. Electric Pump Hose
7. Hand Gun

AFTER SPRAYING

4. Loosen Injector Tank Lid about 1/8 of a turn to allow air to escape. Engage the Centrifugal Pump, by lowering the Pump Engagement Lever, until Injector Tank is 1/2 full. Then raise the Pump Engagement Lever to disengage.

> **⚠ WARNING**
>
> - **Chemicals can seriously injure persons, animals, plants, soils and other property.**
> - **The Centrifugal Pump is a high volume pump. At full RPM it will fill the Injection Tank completely full in approx. 30 sec.**
> - **If Injector Tank is overfilled it may discharge the diluted chemical from around cap.**
> - **Never flush Injection Tank with Lid off. The Flush Nozzle sprays in all directions and will spray out of tank opening.**
> - **Never flush Injection Tank with Lid completely tight. Pressure will build up in tank and tank fitting may break or hose may burst.**
> - **Watch carefully when flushing Tank DO NOT fill more than half full.**

5. Detach the Rinse Hose Coupler from Injection Tank and tighten the Injector Tank Lid.

6. Disconnect the Injection Tank Suction Hose and attach to the Electric Pump Hose.

7. While driving vehicle turn on the Electric Pump and spray the diluted chemical in a non-treated area until all diluted chemical is sprayed from Injector Tank.

8. Turn off the Electric Pump.

9. Repeat this procedure.

10. After the Injector Tank has been flushed two times add a Tank Cleaner and Neutralizer to the tank.

11. Connect the Injection Tank Suction Hose back to the Injection Pump.

12. Wipe off Rinse Hose Coupler and Coupler on top of Injection Tank.

13. Attach the Rinse Hose to the Coupler on top of the Injector Tank.

14. Loosen Injector Tank Lid about 1/8 a turn to allow air to escape. Engage the Centrifugal Pump, by lowering the Pump Engagement Lever, until Injector Tank is 1/2 full. Then raise the Pump Engagement Lever to disengage.

15. Detach the Rinse Hose Coupler from Injection Tank and tighten the Injector Tank Lid.

16. Undo Injection Tank Strap. Pick up Tank and shake to mix Neutralizer with water. Strap Tank Back to Saddle.

17. Place Valve Handle on Injection Pump to the calibration position and turn on all Booms.

18. Let water and neutralizer recirculate for approx. 1 min.

19 Turn Master Boom switch off and Valve Handle back to the spray position.

20. Turn on Control Console depress the key labeled  momentarily. Enter "3.0" in this key.

21. Return to the area left in last pass. Turn on Master Boom switch and spray 3 oz. of remaining chemical this distance. After "Chem 1 Volume" display reaches "0" allow sprayer to spray an additional 15 sec.

22. Turn off Control Console. Disconnect the Injection Tank Suction Hose and attach to the Electric Pump Hose. Turn on the Electric Pump and spray the diluted chemical in non-treated area until all diluted chemical is sprayed from Injector Tank.

23. Turn off the Electric Pump and connect the Injection Tank Suction Hose back to the Injection Pump.

24. Repeat Steps 1-22 to flush Injector Tank 2.

25. After flushing Injection Tank(s) attach Rinse Hose to Hand Gun. Turn Master Boom Switch and Control Console Power Switch off.

26. Engage Centrifugal Pump.

27. Use Hand Gun to spray off Booms and all other external contaminated areas.

AFTER SPRAYING

IMPORTANT! Electric Pump may be damaged if sprayed directly with Hand Gun.

⚠ WARNING

- **Liquid is discharged from Hand Gun under high pressure.**
- **High pressure spray can cause personal injury.**
- **DO NOT spray yourself with Hand Gun or operate near bystanders.**

RETRACTING BOOMS

1. Start with Left Boom (Boom 1). Swing Boom around to the center of the vehicle. Lift boom slightly and set on Boom Hold In Assembly. See FIG. 10.

2. Repeat procedure for Right Boom (Boom 3).

3. Secure both Booms with the Boom Hold In Hooks.

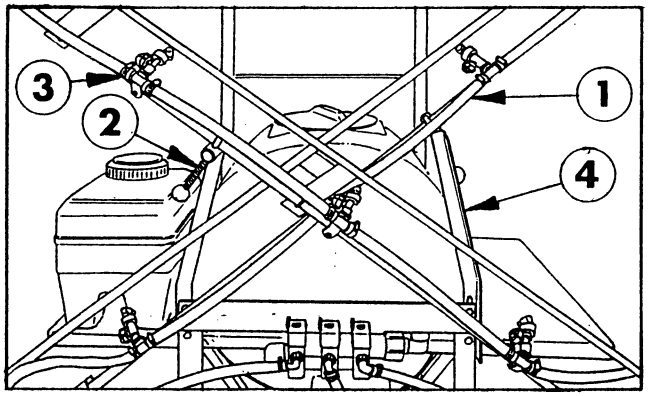

Fig. 10

1. Left Boom
2. Boom Hold In Hook
3. Right Boom
4. Boom Hold In Assembly

MAINTENANCE

1. **Before** servicing or making any adjustments to the Injector Pro™:

   A. Stop the transport vehicle and set the parking brake.

   B. Shut off the vehicle's engine and remove key from ignition.

   C. Disengage all power and wait until all moving parts have stopped.

2. Keep all nuts, bolts and other fasteners tightened securely. Replace any shields removed during servicing or adjustments.

3. To be sure of optimum performance and safety, always purchase genuine TORO replacement parts and accessories. Replacement parts and accessories made by other manufacturers could be dangerous. Altering this equipment in any manner may affect the machine's operation, performance, durability or its use may result in injury or death. Such use could void the product warranty of the TORO Company.

PROCEDURE TO RE-CALIBRATE PUMP

1. Enter the number 50 into METER 1 CAL key on InJector Pro Console.

2. Place Valve Handle on Injection Pump 1 to the calibration position. See FIG. 8.

3. Remove the Tank Return Hose Coupler from the top of Injection Tank.

4. Insert the Coupling Pipe into the Tank Return Hose Coupler. See FIG. 9.

⚠ WARNING

- **Chemicals can seriously injure persons, animals, plants, soils and other property.**
- **Tank Return Hose may burst if Injection Pump is run while it is detached.**
- **Make sure Tank Return Hose is attached to either the female Tank Return Coupler or Coupling Pipe when Injection Pump is run.**

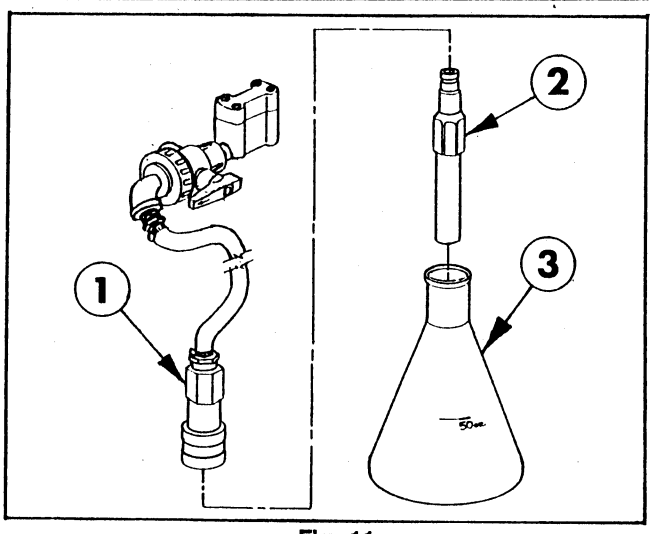

Fig. 11

1. Tank Return Hose Coupler
2. Calibration Pipe
3. Calibration Flask

5. Place BOOM and MASTER switches ON and CHEM 1 - FLUSH/MAN/AUTO switch to MAN.

6. Run pump until liquid appears from the tank return hose. Place CHEM 1 - FLUSH/MAN/AUTO switch to FLUSH.

7. Enter "0" into CHEM 1 VOLUME key.

8. Place tank return hose into Calibration Flask.

9. Place CHEM 1 - FLUSH/MAN/AUTO switch to MAN until 50 oz. of measured chemical is pumped. The number displayed in CHEM 1 VOLUME key is the new METER 1 CAL.

10. Enter this new Meter Cal number in METER 1 CAL key.

11. Enter "0" in CHEM 1 VOLUME key.

12. Place CHEM 1 - FLUSH/MAN/AUTO switch to MAN until 50 oz. of measured chemical is pumped.

13. The number in CHEM 1 VOLUME key should be 49, 50 or 51. If not, repeat calibration procedures.

14. Empty tank return hose into measuring container.

15. Pour chemical caught in measuring container back into Injection Module Tank.

16. Repeat procedure to calibrate Injection Pump 2 (If used).

PREVENTIVE MAINTENANCE

Preventive Maintenance is most important to assure long life of the system. The following maintenance procedures should be followed on a regular basis:

1. Flush Carrier system with clear water and flushing agent after each spray job. Failure to clean systems can result in crystallization of chemicals which may plug the Solenoids, Control Valve, Hoses and/or Nozzle Tips, and seriously damage the Centrifugal Pump.

2. Flush and drain system before storing.

IMPORTANT: Freezing temperatures may damage system if water is not drained.

3. Periodically clean strainer on Injection Module.

4. Check oil level in Injection Pump **daily.** If addition of oil is required, add Mobile #1 (5W30) **ONLY**. Drain and refill the pump after every 150 hours of operation.

PROCEDURE TO TEST SPEED SENSOR EXTENSION CABLE

Disconnect extension cable from Speed Sensor Assembly cable. Hold extension cable connector so that key way is pointing in the 12 o'clock position.

Procedure to check cable:

1. Enter SPEED CAL number of 1000 in key labelled: SPEED CAL 4

2. Depress key labelled: DISTANCE

3. With small jumper wire (or paper clip), short between 10 o'clock and 6 o'clock sockets with a "short - no short" motion. This should cause a speed reading to be displayed in the Console. Each time a contact is made, the DISTANCE total should increment up 1 or more counts. See FIG. 10.

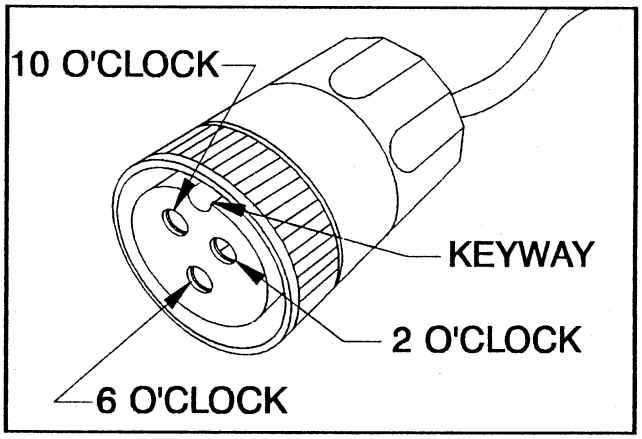

Fig. 12

4. If DISTANCE does not count up, remove the section of cable and repeat test at connector next closest to console. Replace defective cable as required.

5. Perform above voltage checks.

6. If cables all test good, replace speed sensor.

NOTE: After testing is complete, re-enter correct SPEED CAL number before spraying.

PROCEDURE TO TEST CHEMICAL FLOW CABLES

Disconnect cable from Flow Sensor. Hold Flow Sensor cable so that the key way is pointing in the 12 o'clock position:

MAINTENANCE

Procedure to check cable:

1. Enter a METER CAL number of one (1) in key labelled: [METER 1 CAL 5] for Chemical 1 cable; [METER 2 CAL 6] for Chemical 2 cable.

2. Depress key labelled: [CHEM 1 VOLUME] Chemical 1 cable or [CHEM 2 VOLUME] for Chemical 2 cable.

3. Place MASTER and BOOM switches on.

4. With small jumper wire (or paper clip), short between 2 o'clock and 6 o'clock sockets with a "short - no short" motion. Each time a contact is made, the VOLUME total should increment up 1 or more counts. See FIG. 10.

5. If VOLUME does not count up, remove the section of cable and repeat test at connector next closest to Console. Replace defective cable as required.

6. Perform above voltage checks.

7. If cables all test good, replace Flow Sensor.

NOTE: After testing is complete, re-enter correct METER CAL numbers before spraying.

STORAGE

Flush the entire spraying system with clear water and flushing agent. Let system drain and run some anti-freeze through the entire system. FREEZING TEMPERATURES MAY DAMAGE THE SYSTEM IF WATER IS NOT DRAINED.

Should the Raven Console require service, refer to the serial no. decal on the bottom of the Console when requesting assistance or information.

SPRAY PUMP

Remove Suction Hose from pump and place a light weight motor oil into the Pump Housing. Turn Pump over to insure that internal parts become coated with oil. Reinstall suction hose.

SERVICING AFTER STORAGE

Flush the entire spraying system with clean water and detergent.

Flush the entire spraying system again with clean, clear water to rinse.

Let system drain.

STORAGE AND DISPOSAL OF CHEMICALS

Follow the chemical manufacturer's recommendations for storage and disposal of chemicals.

SELF TEST FEATURE

SELF TEST allows speed simulation for testing the system while the vehicle is not moving. Enter the simulated operating speed in the key labeled: [SPEED]

If 4 MPH [6.4 km/h] is desired, enter 4.0 [6.4]

Verify speed by depressing key labeled: [SELF TEST] 4.0 [6.4] will appear in the DATA display.

The SELF TEST speed will clear itself when motion of vehicle is detected by the Speed Sensor. A SPEED CAL value of 900 [230] or greater is recommended when operating in this mode.

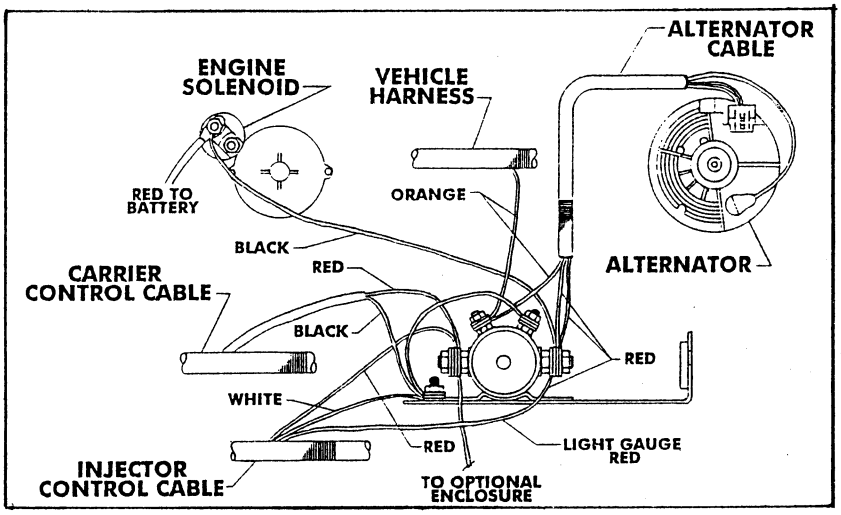

DETAIL A

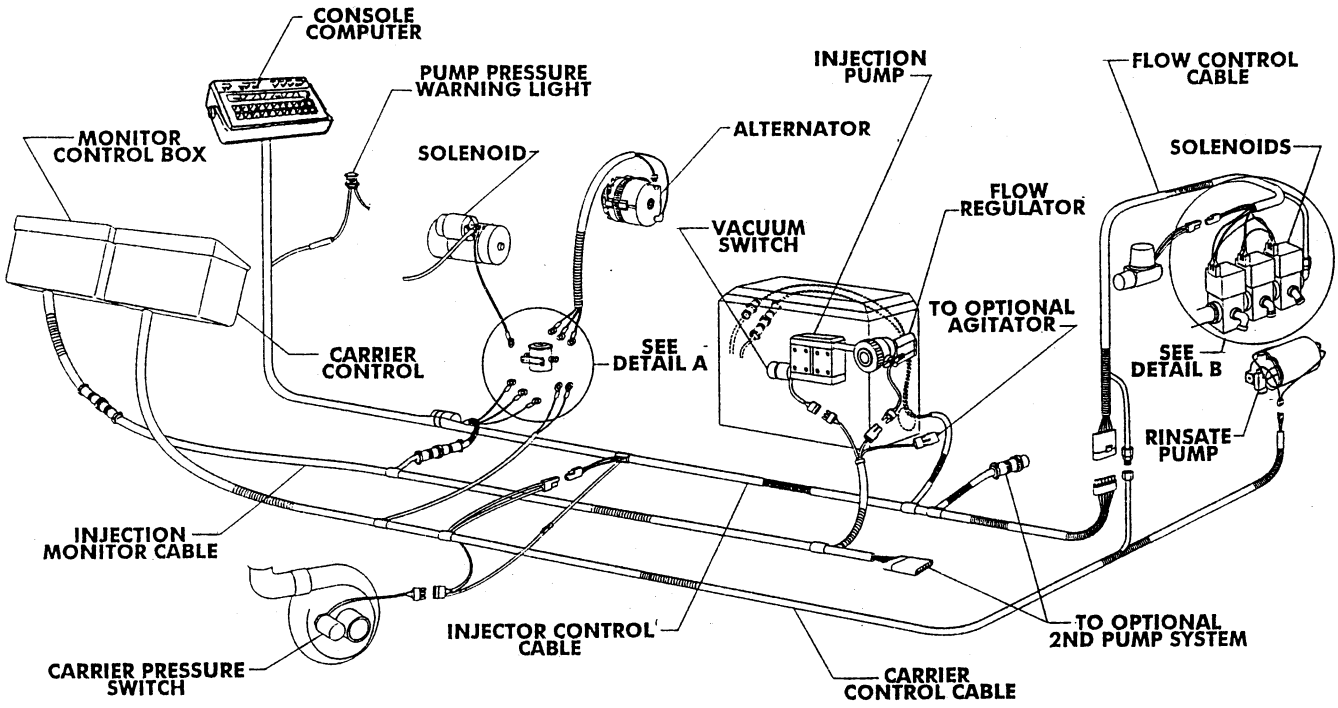

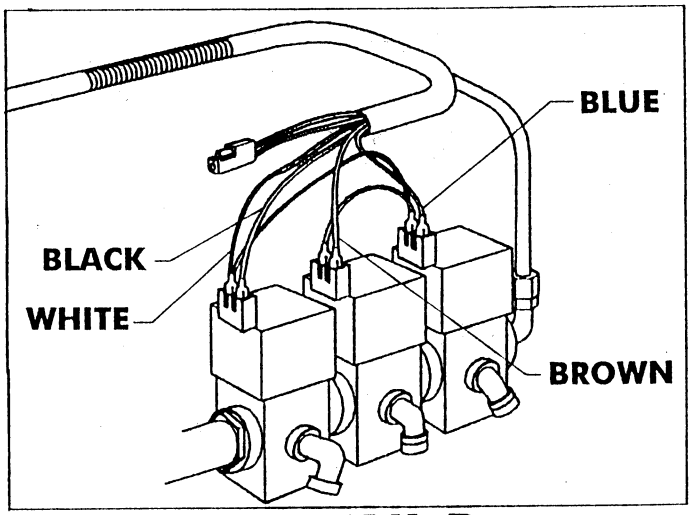

DETAIL B

PLUMBING SCHEMATIC
(SPRAYING MODE)

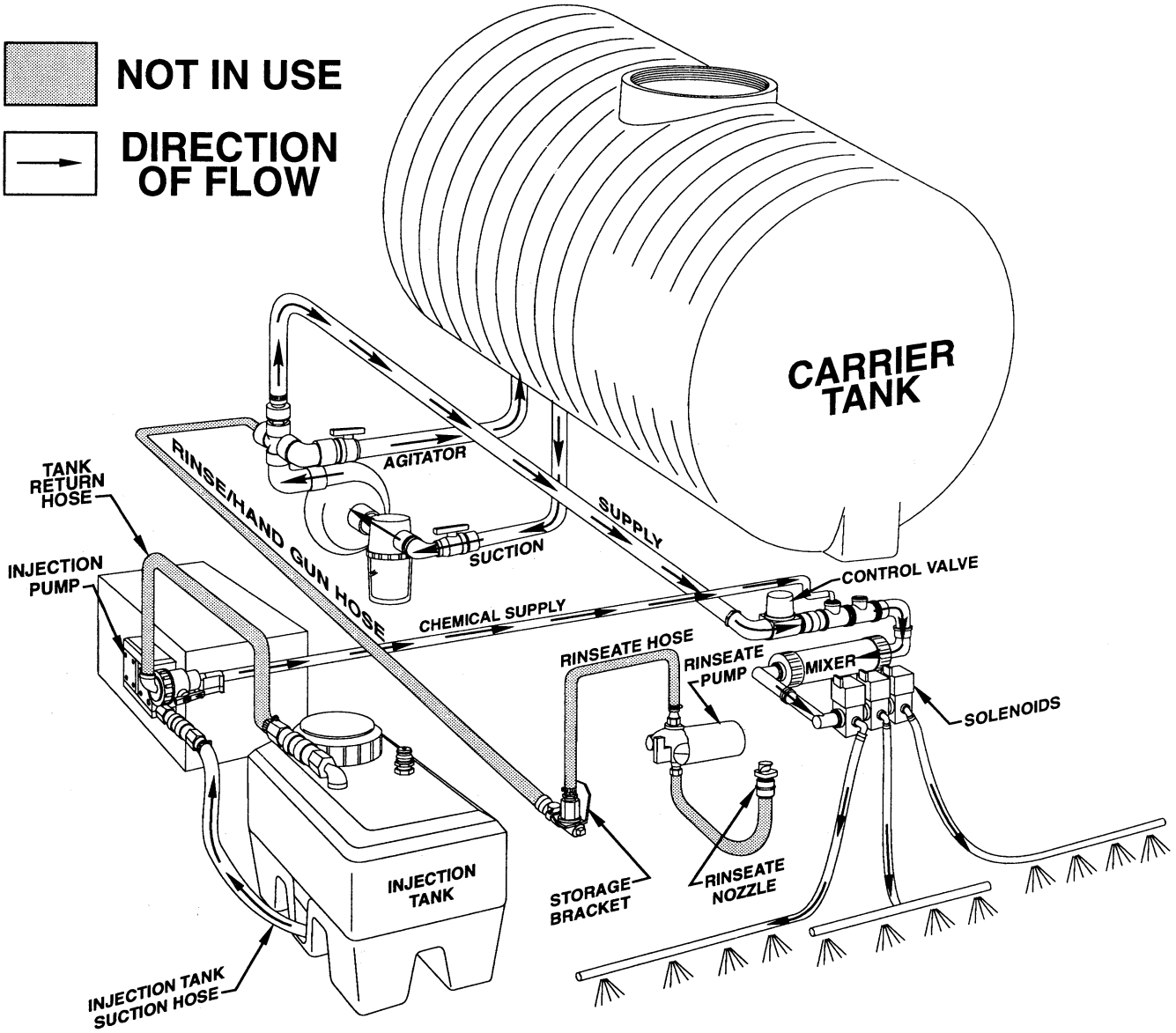

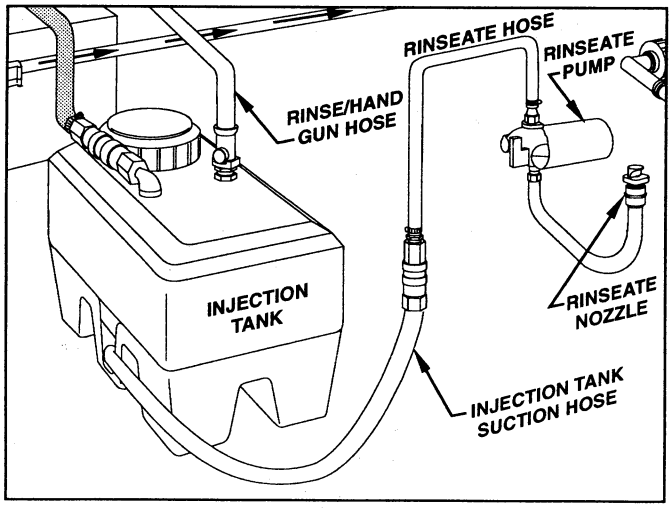

RINSING MODE

NOTES:

The Toro Promise
A One Year Limited Warranty

The Toro Company promises to repair your InJector Pro™ (comprising of models 41020, 41021, 41128, 41190) if defective in materials or workmanship. The following time periods from the date of purchase apply special warranty terms, on certain components, may be offered through The Toro Company by the component manufacturers:

Commercial Products.....1 Year

The cost of parts, labor and transportation are included.

If you feel your TORO Product is defective and wish to rely on The Toro Promise, the following procedure is recommended:

1. Contact your Authorized TORO Distributor or Commercial Dealer (the Yellow Pages of your telephone directory is a good reference source).
2. The TORO Distributor or Commercial Dealer will advise you on the arrangements that can be made to inspect and repair your product.
3. The TORO Distributor or Commercial Dealer will inspect the product and advise you whether the product is defective and, if so, make all repairs necessary to correct the defect without an extra charge to you.

If for any reason you are dissatisfied with the distributor's analysis of the defect or the service performed, you may contact us.

Write:

TORO Commercial Products Service Department
8111 Lyndale Avenue South
Bloomington, MN 55420-1196

The above remedy of product defects through repair by an Authorized TORO Distributor or Commercial Dealer is the purchaser's sole remedy for any defect.

THERE IS NO OTHER EXPRESS WARRANTY. ALL IMPLIED WARRANTIES OF MERCHANTABILITY AND FITNESS FOR USE ARE LIMITED TO THE DURATION OF THE EXPRESS WARRANTY.

Some states do not allow limitations on how long an implied warranty lasts, so the above limitation may not apply to you.

This Warranty applies only to parts or components which are defective and does not cover repairs necessary due to normal wear, misuse, accidents, or lack of proper maintenance. Regular, routine maintenance of the unit to keep it in proper operating condition is the responsibility of the owner.

All warranty repairs reimbursable under The Toro Promise must be performed by an Authorized Toro Commercial Dealer or Distributor using Toro approved replacement parts.

Repairs or attempted repairs by anyone other than an Authorized TORO Distributor or Commercial Dealer are not reimbursable under The TORO Promise. In addition, these unauthorized repair attempts may result in additional malfunctions, the correction of which is not covered by warranty.

THE TORO COMPANY IS NOT LIABLE FOR INDIRECT, INCIDENTAL OR CONSEQUENTIAL DAMAGES IN CONNECTION WITH THE USE OF THE PRODUCT INCLUDING ANY COST OR EXPENSE OF PROVIDING SUBSTITUTE EQUIPMENT OR SERVICE DURING PERIODS OF MALFUNCTION OR NON-USE.

Some states do not allow the exclusion of incidental or consequential damages, so the above exclusion may not apply to you.

This warranty gives you specific legal rights, and you may also have other rights which vary from state to state.

COUNTRIES OTHER THAN THE UNITED STATES OR CANADA

Customers who have purchased TORO products exported from the United States or Canada should contact their TORO Distributor (Dealer) to obtain guarantee policies for your country, province, or state. If for any reason you are dissatisfied with your Distributor's service or have difficulty obtaining guarantee information, contact the TORO importer. If all other remedies fail, you may contact us at The Toro Company.

Compliance with Radio Interference Regulations Certified.