Form No. 3472-185 Rev A

TORO®

Count on it.

Parts Catalog

Station Loop Only Charge Station

Turf Pro™ Series Robotic Mower or Range Pro Series Ball Picker

Model No. 30913EU—Serial No. 324000000 and Up

Register at www.Toro.com.
Original Instructions (EN)

3472-185 A

Ordering Replacement Parts

To order replacement parts, please supply the part number, the quantity, and the description of each part desired.

Understanding Reference Numbers

Each identified part in an illustration has a reference number. The reference number for a part also appears in the parts list, along with other information about the part.

This catalog uses two special reference number formats, one to indicate parts in a service assembly and another to indicate the quantity of a given part in an illustration.

Service Assembly Reference Numbers

Parts in service assemblies have reference numbers in the form a:b. The a represents the reference number of the entire service assembly and the b represents a sequential number unique to each part within the service assembly.

For example, a wheel assembly might be identified by reference number 6, the tire by 6:1, the valve by 6:2, and the wheel by 6:3. When you order the assembly identified by reference number 6, you receive all parts identified by reference numbers 6:1,6:2, and 6:3. However, you may also order any part individually. Reference numbers of this type appear in illustration and in parts lists.

Reference Numbers Indicating Quantity

In an illustration, if a reference number indicates more than one part, the reference number has the form nX y. The n represents the quantity of the part, the X is the multiplication symbol, and the y represents the reference number.

For example, in an illustration, the reference number 2X 37 means that two of the parts identified by reference number 37 are indicated.

Contents

Charge Arm Assembly 4
Body Assembly 6
Electrical Assembly 8
Attachments and Accessories 10

© 2025—The Toro® Company
8111 Lyndale Avenue South
Bloomington, MN 55420

Contact us at www.Toro.com.
Printed in the USA.
All Rights Reserved

Charge Arm Assembly

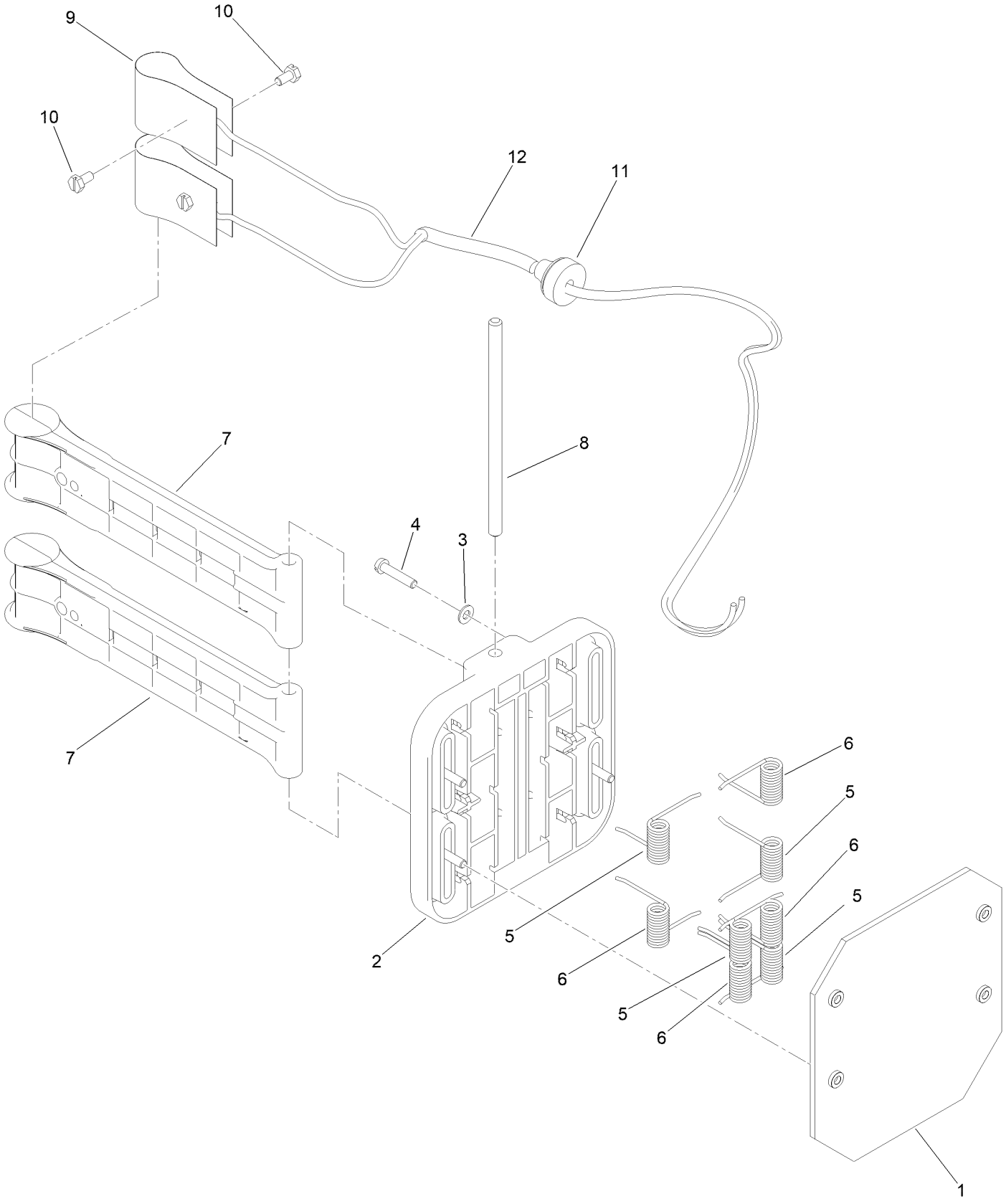

Charge Arm Assembly (continued)

Ref.	Part Number	Qty.	Description
1	163-5830	1	Plate-Mount, Arm
2	163-5833	1	Support-Arm, Charger
3	163-5433	4	Washer-Flat
4	163-5834	4	Screw-Slotted
5	163-5831	4	Spring-Torsion, LH
6	163-5832	4	Spring-Torsion, RH
7	163-5835	2	Arm-Charger
8	163-5836	1	Rod-Pivot, Arm
9	163-5837	1	Charge Cable Contacts ASM
10	163-5754	4	Screw-HH, Slotted
11	163-5838	1	Grommet
12	163-5855	1	Sleeve-Coiled, 150MM

Body Assembly

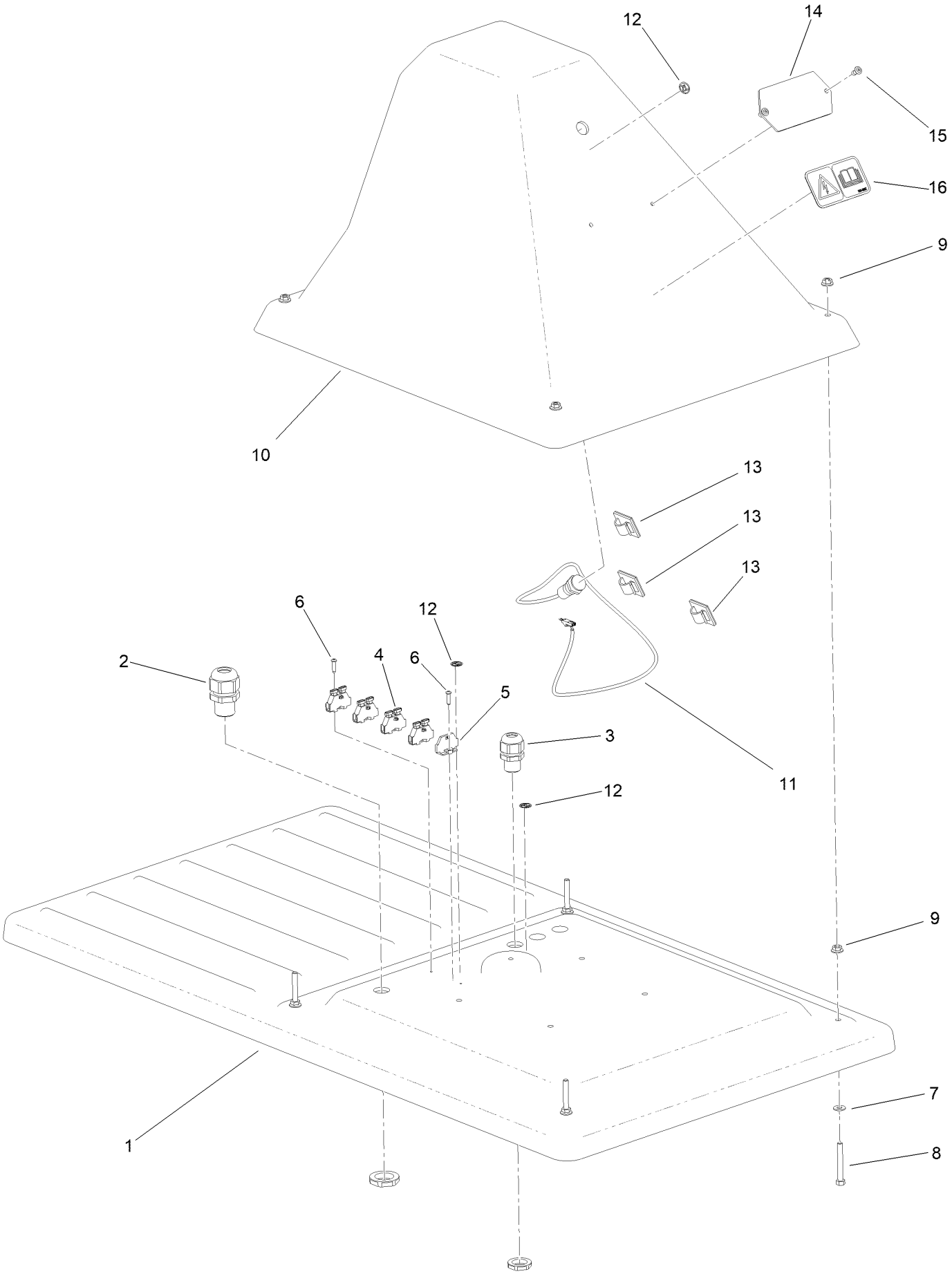

Body Assembly (continued)

Ref.	Part Number	Qty.	Description
1	163-3794	1	Plate-Base, Charger
2	163-5822	1	Gland-Cable
3	163-5876	1	Gland-Cable
4	163-5760	4	Block-Terminal
5	163-5759	1	Lid-Block, Terminal
6	163-5523	2	Screw-Pz, Plastic
7	163-5824	4	Washer-Flat
8	163-5823	4	Screw-HH
9	163-5825	8	Nut-Hex, Serrated
10	163-3790	1	Cover-Charger
11	163-5851	1	Light-Indicator, LED
12	163-5849	3	Decal-Identification, Zone L
13	163-5850	3	Clip-Cable
14	163-5858	1	Plate-Serial
15	163-5859	2	Rivet-Pop
16	163-3997	1	Decal - Voltage, High

Electrical Assembly

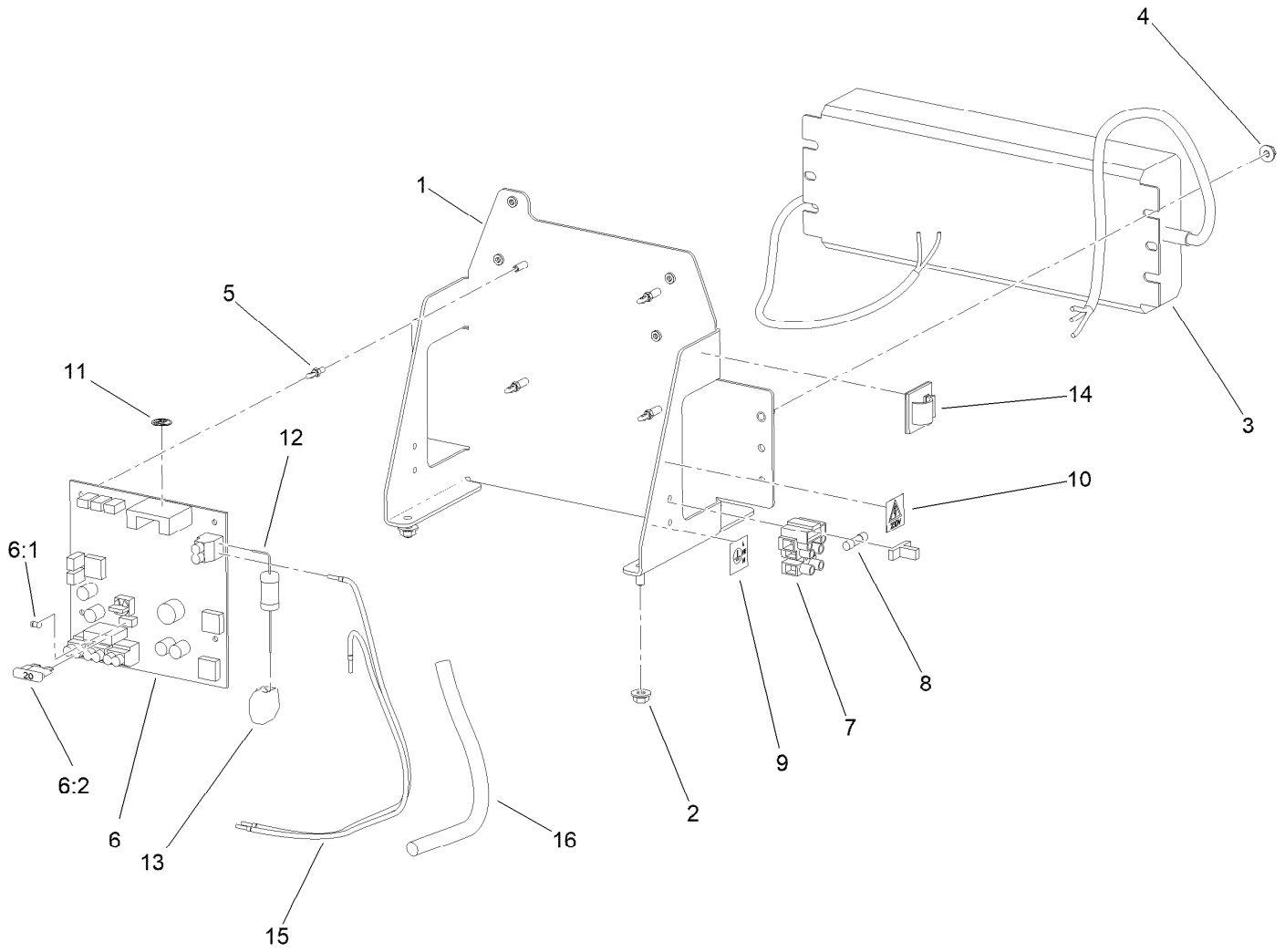

Electrical Assembly (continued)

Ref.	Part Number	Qty.	Description
1	163-5826	1	Frame-Station, Charge
2	163-5825	4	Nut-Hex, Serrated
3	163-5827	1	Power-Supply
4	163-5828	2	Nut-Hex, Serrated
5	163-5842	4	Clip-Mount, Pcb
6	163-5840	1	Pcb-Signal, Charger
6:1	163-5841	1	Fuse-1A
6:2	109101	1	Fuse-Blade, 20 Amp
7	163-5843	1	Terminal-3 Ways
8	163-5844	1	Fuse-5A, Glass
9	163-5845	1	Decal-Connection, Terminal
10	163-5846	1	Decal-230V
11	163-5849	1	Decal-Identification, Zone L
12	163-5852	1	Resistor-Hi-Current
13	163-5853	1	Connector-2 Way
14	163-5850	1	Clip-Cable
15	163-5854	1	Cable
16	163-5856	1	Sleeve-Coiled, 200MM

Attachments and Accessories

For 30913EU Station Loop Only Charge Station Turf Pro Series Robotic Mower or Range Pro Series Ball Picker

Product Name	Model/Part
Kit-Timer Relay	163-3920
Kit-Inductor	163-3921
Kit-Option Extra Peripheral Wire	163-3922
Kit-Busy Loop Multiple	163-3924
Kit-Surge Protector	163-3925
Wire-Spool-1000 FT	163-3926
Wire-Spool-250 FT	163-3927
Wire-Spool-500 M	163-3928

Notes:



Count on it.