FORM NO. 93-0890

TORO®

MODEL NO. 41119-50001 & UP
MODEL NO. 41020-50001 & UP
MODEL NO. 41021-50001 & UP
MODEL NO. 41128-50001 & UP
MODEL NO. 41120-50001 & UP

OPERATOR'S MANUAL

MANUAL VALVE SPRAY SYSTEM

FOR THE MULTI-PRO 1100™ VEHICLE

To assure maximum safety, optimum performance, and to gain knowledge of the product, it is essential that you or any other operator of this Vehicle read and understand the contents of this manual before the engine is ever started. Pay particular attention to the SAFETY INSTRUCTIONS highlighted by the triangular safety alert symbol.

⚠ The safety alert symbol means CAUTION, WARNING or DANGER - personal safety instruction. Failure to comply with the instruction may result in personal injury.

⚠ SAFETY INSTRUCTIONS

Keep this Operator's Manual in the plastic tube behind the operator seat.

It is very important that all persons operating this equipment have easy access to these instructions at all times!

Carefully read and follow the "Set-Up" Instructions that are provided with this equipment and the Safety Instructions in the Multi-Pro™ Operator's Manual.

RECOGNIZE SAFETY INFORMATION

⚠ This safety-alert symbol is used to call attention to a **dangerous** situation, which could result in serious injury or death to the operator or a bystander.

Safety, mechanical and some general information in this manual are emphasized. **DANGER, WARNING,** and **CAUTION** identify safety messages. Whenever the triangular safety symbol appears, it is followed by a safety message that must be read and understood. For more details concerning safety, read the Safety Instructions on this page and page 2. **IMPORTANT** identifies special mechanical information and **NOTE** identifies general information worthy of special attention.

These instructions are provided as a guide for the safe operation and maintenance of this equipment. However, the operator's personal safety, as well as those persons in the work area, will depend on the careful actions and good judgement of the operator. **To reduce the potential for injury or death, comply with the following safety instructions.**

BEFORE OPERATING:

1. Operate this machine only after reading and understanding the contents of this manual. A replacement manual is available by sending complete model and serial number to: Hahn, Inc., 1625 N. Garvin, Evansville, IN 47711.

2. Learn how to operate the Sprayer and how to use the controls properly. DO NOT let anyone operate this equipment without first receiving thorough instructions.

3. Keep all shields, safety devices and decals in place. If a shield, safety device or decal is malfunctioning, illegible or damaged, repair or replace it before operating the machine.

4. Chemicals can injure persons, animals, plants, soils or other property. To eliminate environmental damage and personal injury:

A. Select the proper chemical for the job.

B. Follow manufacturer's instructions on chemical container labels. Apply and handle chemicals as recommended.

C. Handle and apply chemicals with care. Wear goggles and other necessary protective equipment. Handle chemicals in well ventilated areas. Never smoke while handling chemicals.

D. Properly dispose of chemical container and unused chemicals.

©The Toro Company -1995
All Rights Reserved

⚠ SAFETY INSTRUCTIONS

MAINTENANCE:

11. Before servicing or making any adjustments to the Sprayer:

A. Stop the Vehicle and set the parking brake.

B. Shut off the vehicle's engine and remove key from ignition.

C. Disengage all power and wait until all moving parts have stopped.

12. Keep all nuts, bolts and other fasteners tightened securely. Replace any shields removed during servicing or adjustments.

13. To be sure of optimum performance and safety, always purchase genuine TORO replacement parts and accessories. Replacement parts and accessories made by othe manufacturers could be dangerous. Altering this equipmen in any manner may affect the machine's operation, performance, durability or its use may result in injury or death. Such use could void the product warranty of the TORO Company.

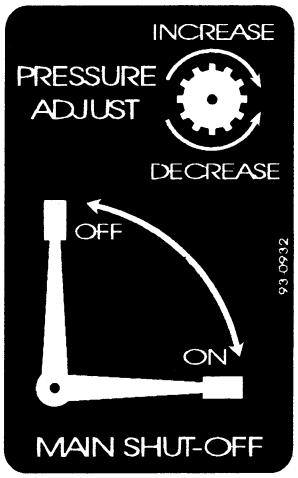

Part No. 93-0932: Located on Control Valve/Mounting Bracket Assembly.

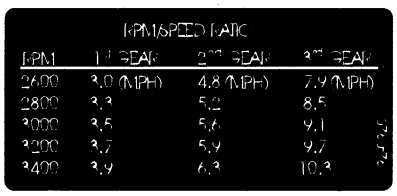

Part No. 93-0920 Located above Tachometer



Part No. 93-1021: Located on face of Tachometer.

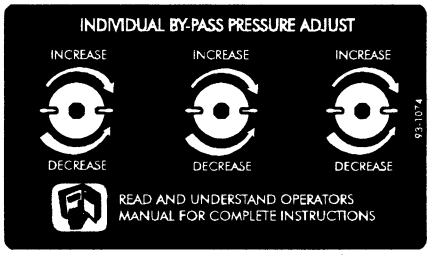

Part No. 93-1074: Located on Splash Shield.

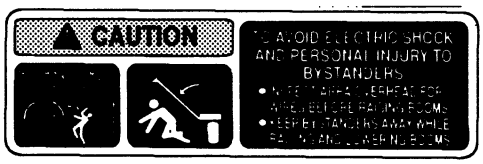

Part No. 87-0570: Located on Rear Tank Band.

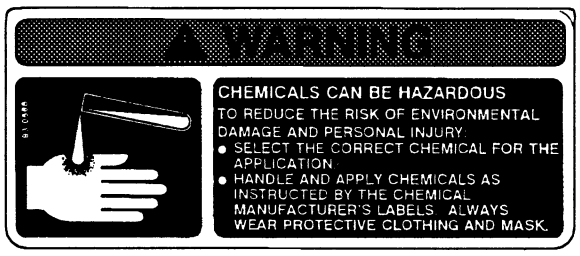

Part No. 93-0688: Located on Lid of Sprayer Tank.



Part No. 93-0800: Located on side of Clean Water Wash Tank Saddle.

CONTROLS

PUMP ENGAGEMENT LEVER: Pivot the Pump Engagement Lever DOWN to lower the Centrifugal Pump and ENGAGE the drive belt. Pull the Lever UP to DISENGAGE the drive belt. See FIG. 1.

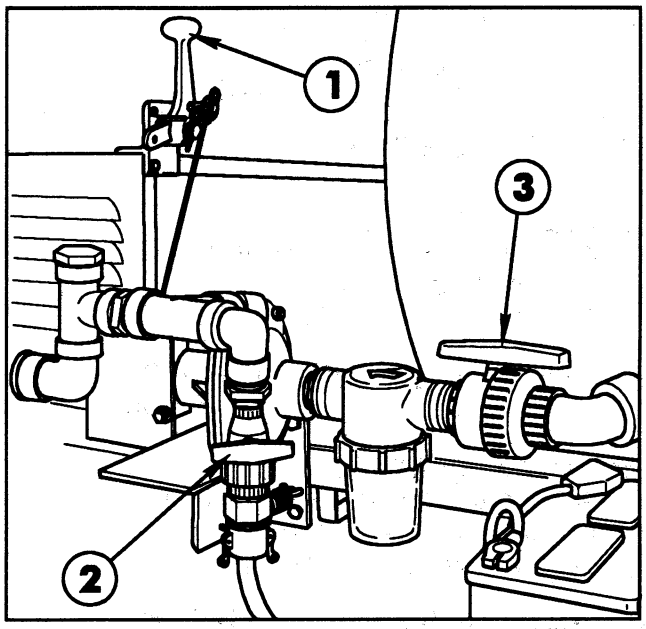

FIG. 1

1. Pump Engagement lever
2. Agitator Valve Handle
3. Suction Valve Handle

AGITATOR VALVE HANDLE: Opens and closes the Agitator Valve to Activate, adjust, or stop the agitation of the spray solution in the Tank.

SUCTION VALVE HANDLE: Opens and closes the Suction Line Valve. Close during Maintenance to the Suction Line Strainer or Centrifugal Pump.

IMPORTANT! The Pump will be damaged if it is activated with the Suction Line Valve closed, or before the Tank contains enough liquid to flood the Pump.

MAIN PRESSURE ADJUST KNOB: Controls overall pressure of Boom Spray. Turn the Knob clockwise to increase the pressure; counter-clockwise to decrease the pressure.

MAIN SHUTOFF LEVER: Pivot the Main Shutoff Lever DOWN to begin flow to all open Boom valves.

INDIVIDUAL BOOM SHUTOFF LEVERS: Pivot Boom Shut Off Lever **DOWN** to begin flow to individual Booms.

INDIVIDUAL BY-PASS PRESSURE ADJUST KNOBS: Turn Knobs to adjust pressure to individual Booms. Refer to the BEFORE SPRAYING section on page for further instructions on this procedure.

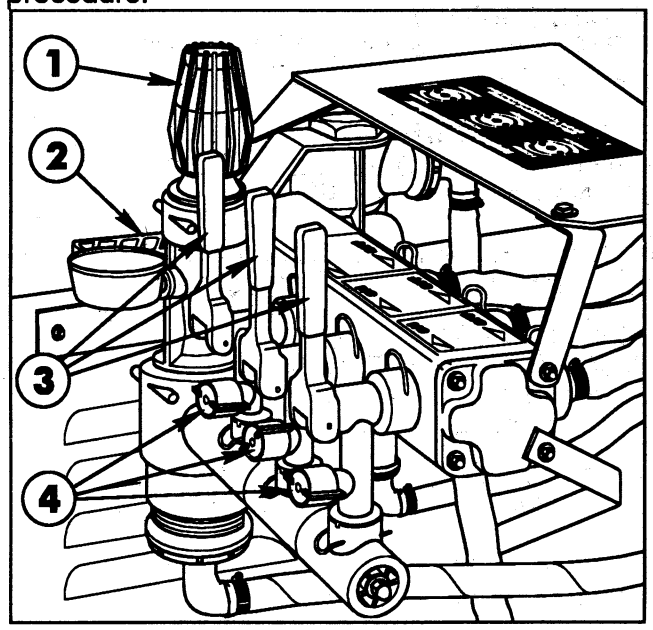

FIG. 2

1. Main Pressure Adjust Knob
2. Main Shutoff Lever
3. Boom Shutoff Levers
4. By-Pass Pressure Adjust Knobs

NOZZLE SELECTION

See the nozzle charts on page 5 to be sure that your spray nozzles have the capacity necessary to achieve the application rate selected.

To select the proper nozzle, you need to know:

1. Recommended chemical application rate in gallons per acre, gallons per 1000 sq. ft. or liters per hectare.

2. Average Vehicle speed in Miles per hour or kilometers per hour.

3. Nozzle spacing (20 inches or 50 centimeters).

With this information you can calculate the volume per minute per nozzle, using the formulas below.

US FORMULA:

$$\text{G.P.M. (Per Nozzle)} = \frac{\text{G.P.A. x M.P.H. x 20 in.}}{5940}$$

TU (Turf) FORMULA:

$$\text{G.P.M. (Per Nozzle)} = \frac{\text{G.P.K. x M.P.H. x 20 in.}}{137}$$

SI (METRIC) FORMULA:

$$\text{lit/min (Per Nozzle)} = \frac{\text{lit/ha x km/h x 50 cm}}{60{,}000}$$

Use G.P.M. (lit/min) and Pressure to select appropriate nozzle from chart on page .

EXAMPLE (US FORMULA)

Application Rate = 75 Gallons/Acre
Vehicle Speed = 4 M.P.H.
Nozzle Spacing = 20 inches

$$\frac{\text{75 G.P.A. x 4 M.P.H. x 20}}{5940} = \textbf{1.00 G.P.M. (per nozzle)}$$

With 1.00 G.P.M. and a pressure of 40 P.S.I. you would select Nozzle No. 40444.

SYMBOL DEFINITIONS:

GPM	- Gallons per minute
lit/min	- Liters per minute
dl/min	- Deciliter per minute
PSI	- Pounds per square inch
kPa	- Kilopascal
GPA	- Gallons per acre
lit/ha	- Liter per hectare
ml/ha	- Milliliter per hectare
GPK	- Gallons per 1,000 sq. ft.
mm	- Millimeters
cm	- Centimeters
dm	- Decimeters
m	- Meter
MPH	- Miles per hour
km	- Kilometers
km/h	- Kilometers per hour
US	- Volume per ACRE
SI	- Volume per HECTARE
TU	- Volume per 1,000 sq. ft.

LIQUID CONVERSIONS

EXAMPLE (TU FORMULA):

Application Rate = 1.70 Gal./1000 sq. ft.
Vehicle Speed = 4 M.P.H.
Nozzle Spacing = 20 inches

$$\frac{\text{1.70 G.P.K. x 4 M.P.H. x 20}}{137} = \textbf{1.00 G.P.M. (per nozzle)}$$

EXAMPLE (SI FORMULA):

Application Rate = 907 lit/hectare
Vehicle Speed = 5 km/h
Nozzle Spacing = 50 cm

$$\frac{\text{907 lit/ha x 5 km/h x 50}}{60{,}000} = \textbf{3.78 lit/min. (per nozzle)}$$

With 3.78 G.P.M. and a pressure at 275 kPa you would select nozzle No. 40444.

U.S. Gallons x 128 = Fluid Ounces
U.S. Gallons x 3.785 = Liters
U.S. Gallons x 0.83267 = Imperial Gallons
U.S. Gallons x 8.34 = Pounds (Water)

LENGTH

1 millimeter (mm) = 0.039 inch
1 centimeter (cm) = 0.393 inch
1 meter (m) = 3.281 feet
1 kilometer (km) = 0.621 mile
1 inch = 25.4 millimeters; 2.54 centimeters
1 mile = 1.609 kilometers

PRESSURE

1 psi = 6.89 kPa

AREA

1 square meter = 10.764 sq. feet
1 hectare (ha) = 2.471 acres; 10,000 sq.meters

US AND TU FORMULAS

TORO Part No.	Nozzle Number / Color-Code	Pressure (PSIG)	Capacity 1-Nozzle (GPM)	APPLICATION RATES FOR NOZZLES 20" SPACING — GALLONS PER ACRE 3 MPH	4 MPH	5 MPH	6 MPH	GALLONS PER 1000 SQ. FT. 3 MPH	4 MPH	5 MPH	6 MPH
92-3977	RA-4	20	.28	28	21	17	14	0.64	0.48	0.39	0.32
	120°	30	.35	34	26	20	17	0.78	0.60	0.46	0.39
	¼"	40	.40	40	30	24	20	0.92	0.69	0.55	0.46
	Yellow	50	.45	44	33	27	22	1.01	0.76	0.62	0.51
43082	RA-5	20	.36	35	26	21	17.5	0.80	0.60	0.48	0.40
	120°	30	.44	42	32	26	21	0.96	0.73	0.60	0.48
	¼"	40	.50	50	37	30	25	1.15	0.85	0.69	0.57
	Dk. Blue	50	.56	56	42	33	28	1.29	0.96	0.76	0.64
41088	RA-6	20	.43	42	32	25	21	0.96	0.73	0.57	0.48
	120°	30	.52	52	39	31	26	1.19	0.90	0.71	0.60
	¼"	40	.60	60	45	36	30	1.38	1.03	0.83	0.69
	Dk. Green	50	.67	66	50	40	33	1.52	1.15	0.92	0.76
42828	RA-8	20	.57	56	42	34	28	1.29	0.96	0.78	0.64
	120°	30	.70	68	51	41	34	1.56	1.17	0.94	0.78
	¼"	40	.80	80	59	48	40	1.84	1.35	1.10	0.92
	Red	50	.90	88	66	53	44	2.02	1.52	1.22	1.01
40444	RA-10	20	.71	70	53	42	35	1.61	1.22	0.96	0.80
	120°	30	.87	86	64	51	43	1.97	1.47	1.17	0.99
	¼"	40	1.0	100	74	59	50	2.30	1.70	1.35	1.15
	Tan	50	1.1	110	83	66	55	2.53	1.91	1.52	1.26
92-0027	RA-15	20	1.1	106	79	63	53	2.43	1.81	1.45	1.22
	120°	30	1.3	128	96	77	64	2.94	2.20	1.77	1.47
	¼"	40	1.5	148	111	89	74	3.40	2.55	2.04	1.70
	Lt. Blue	50	1.7	166	125	100	83	3.81	2.87	2.30	1.91
93-0903	RA-25	20	1.8	178	134	104	88	4.09	3.08	2.39	2.02
	140°	30	2.2	218	163	128	108	5.01	3.75	2.94	2.48
	3/4"	40	2.5	248	186	148	124	5.70	4.28	3.40	2.85
	Black	50	2.8	277	208	168	140	6.37	4.78	3.86	3.22

SI FORMULA

TORO Part No.	Nozzle Number / Color-Code	Pressure (kPa)	Capacity 1-Nozzle (L/min)	APPLICATION RATES FOR NOZZLES 50 cm SPACING — LITERS PER HECTARE 5 km/h	6 km/h	8 km/h	10 km/h
92-3977	RA-4	150	0.56	134	112	84	67
	120°	200	0.64	155	129	97	77
	¼"	275	0.76	181	151	113	91
	Yellow	350	0.85	205	171	128	102
43082	RA-5	150	1.4	335	279	209	167
	120°	200	1.61	387	322	242	193
	¼"	275	1.89	453	378	283	227
	Dk. Blue	350	2.13	512	426	320	256
41088	RA-6	150	1.67	402	335	251	201
	120°	200	1.93	464	387	290	232
	¼"	275	2.27	544	453	340	272
	Dk. Green	350	2.56	614	512	384	307
42828	RA-8	150	2.23	536	447	335	268
	120°	200	2.58	619	516	387	309
	¼"	275	3.02	726	605	453	363
	Red	350	3.41	819	682	512	409
40444	RA-10	150	2.79	670	558	419	335
	120°	200	3.22	773	645	483	387
	¼"	275	3.78	907	756	567	453
	Tan	350	4.26	1023	853	640	512
92-0027	RA-15	150	4.18	1008	840	630	504
	120°	200	4.84	1176	980	735	588
	¼"	275	5.67	1368	1140	855	684
	Lt. Blue	350	6.40	1536	1280	960	768
93-0903	RA-25	150	6.98	1675	1396	1047	836
	140°	200	8.06	1934	1612	1208	968
	3/4"	275	9.45	2268	1888	1418	1132
	Black	350	10.66	2558	2132	1598	1280

BEFORE SPRAYING

INITIAL SYSTEM SET-UP:

1. Fill the Tank with water and open the Suction Line Valve. See FIG. 3.

IMPORTANT: The pump will be damaged if it is activated before it is completely filled with liquid. Be certain the suction line valve is open and liquid has reached the pump.

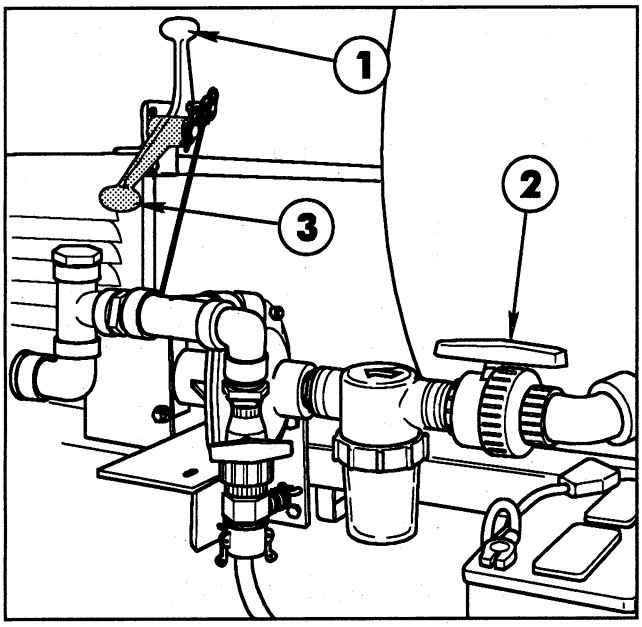

FIG. 3

1. Pump Engagement Lever (disengaged)
2. Suction Valve Handle (open)
3. Pump Engagement Lever(engaged)

2. Take the vehicle out of gear and set the parking brake. Move the Pump Engagement Lever **UP** to the **disengaged** position. Start the engine and set the throttle at 3/4 to full RPM to represent your desired spraying speed.

3. Move the Pump Engagement Lever DOWN to the **engaged** position.

4. Turn all three individual Boom Shutoff Levers and Main Shut Off Lever to the "ON" position.

5. Set the Pressure Gauge to the desired operating pressure, using Main Pressure Adjust Knob

6. With all three Boom Shutoff Levers ON, switch Left Boom to OFF. You will notice a change in pressure at the Gauge. Turn the Left By-Pass Pressure Adjust Knob until the original pressure setting is reached. Turn Left Boom back on.

7. With all Booms ON, switch Center Boom to OFF and adjust the Center Boom's By-Pass Pressure Adjust Knob. Turn Center Boom back on.

8. With all Booms on, switch Right Boom to OFF and repeat this procedure for setting the Right Boom's By-Pass Pressure Adjust Knob. Turn Right Boom back on.

To double check these settings, switch Boom sections ON and OFF. Verify that the pressure does not change at the gauge.

NOTE: This entire procedure should be repeated whenever changing to a different operating pressure.

FILLING THE SOLUTION TANK:

⚠ CAUTION

CHEMICALS ARE HAZARDOUS AND CAN CAUSE PERSONAL INJURY!

• Carefully read the directions printed on the chemical manufacturer's labels before handling chemicals. Instructions on chemical manufacturer's container labels, regarding mixing proportions, should be read and strictly followed.

• Keep spray material from skin. If spray material comes in contact with body, wash it off immediately with clean water and detergent.

• Always wear goggles and other protective equipment as recommended by the Chemical Manufacturer.

IMPORTANT: Do not add chemical to Tank until just before use. The concentrate should not be poured into an empty Tank: fill Tank about one-half full with clean, clear water, add chemical concentrate and finish filling Tank with water. Follow the chemical manufacturer's instructions for mixing spray solution to obtain desired application rate.

FILL THE FRESH WATER WASH TANK

NOTE: Fill Fresh Water Wash Tank with clean water only. Check to assure tank is full before each operation.

In case of chemical contact with skin or eyes, a fresh water wash tank has been installed on the R.H. side of the vehicle.

1. Turn Tank Spigot to on position. See FIG. 4.

2. Hold contaminated area directly under water stream.

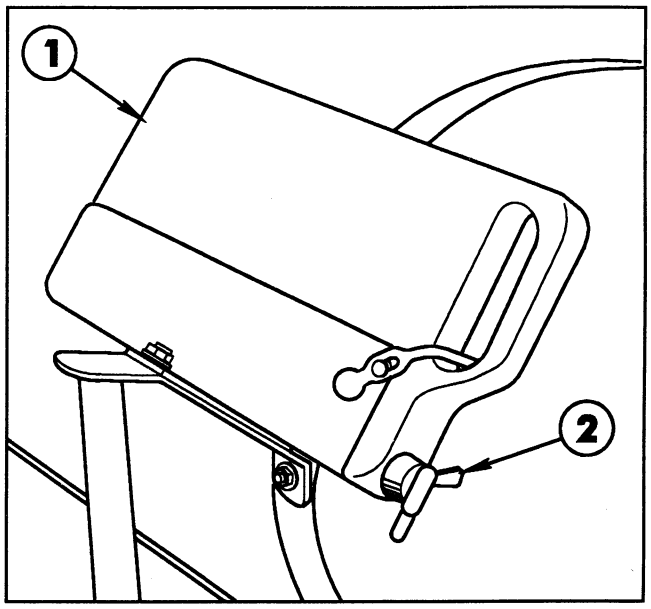

FIG. 4

1.Clean Water Wash Tank 2. Tank Spigot

OPERATION

USING THE SPRAYER:

IMPORTANT: Check all of your equipment... make sure that all components are clean, including the Tank, Pump, Control Valves, Strainers, Check Valves, Hoses, Nozzles, Spray Tips and Suction Line Strainer.

1. Start the Vehicle engine and select the proper gear. Position the throttle to the desired operating RPM, as determined by RPM/Speed ratio decal located on the front dash panel above the Tachometer.

2. Engage the Pump and use the Main Shutoff Lever and Individual Boom Shutoff Levers to control Boom sections while spraying.

IMPORTANT! While operating the Sprayer:

- Do not overlap areas that have been sprayed previously.

- Watch for plugged Nozzles. Replace all worn Nozzles or those producing streaky or uneven patterns.

3. Stop the spray flow **before** stopping the Vehicle.

AFTER SPRAYING:
It is extremely important to carefully wash and clean the Tank after **every** use.
Not only the Tank but the Pump, Hoses, Nozzles, Screens, Filters, and the exterior of the Sprayer also should be cleaned.

Flush Pump After Use
One of the most common causes for faulty pump performance is "gumming" or corrosion inside the pump. Flush the pump and entire system with a solution that will chemically neutralize the liquid pumped. Mix according to the manufacturer's directions. This will dissolve most residue remaining in the pump, leaving the inside of the pump clean for the next use.

A **minimum** of three (3) rinses usually is required for all components of the Sprayer. The addition of a detergent cleaner may be advisable in the initial washing. Directions for such an addition, if required, are included on the chemical container.

Cleaning of the Sprayer should be accomplished in an area where there is no potential for the chemicals to be washed off in surface water or to enter subsurface drainage systems.

When Sprayer is not to be used for an extended period, refer to the **STORAGE** section of this Manual for the detailed instructions to prevent damage to the components.

PREVENTIVE MAINTENANCE

Preventive maintenance is most important to assure long life of the Manual Spray System. The following maintenance procedures should be followed on a regular basis:

Flush the entire spraying system as described on page 7 after each use. Failure to clean the system can result in a chemical residue which can plug the Control Valve, Hoses and/or Nozzle Tips, and seriously damage the Centrifugal Pump.

Wash spray nozzles thoroughly with water. Blow out orifice, clean and dry. If orifice remains clogged, clean it with a soft bristled brush... never use a metal object.

Check all of the nozzles frequently to spot any inconsistencies in the spray pattern. Worn nozzle orifices which allow a greater volume of spray material to flow through the nozzle can cause an expensive loss in chemical and/or turf damage.

SUCTION STRAINER:

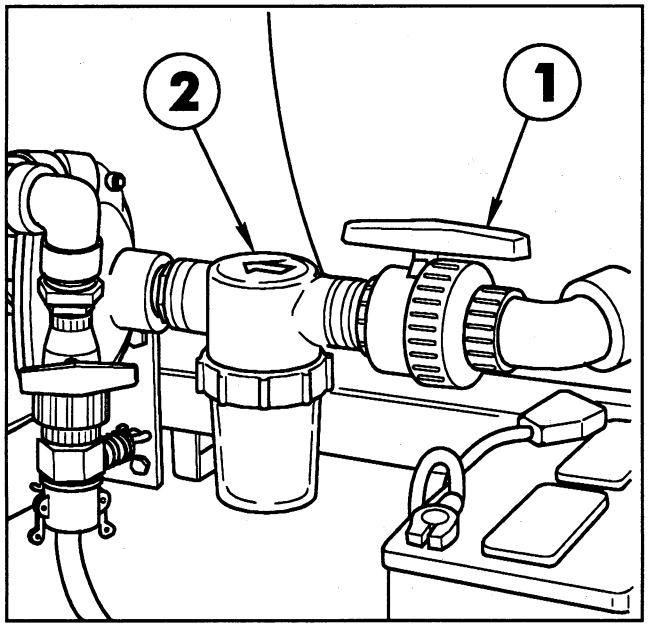

FIG. 5

1. Suction Line Valve (open) 2. Suction Strainer

Turn off Suction Line Valve if Tank is full of spray solution. Remove the bowl and clean the strainer screen when spraying wettable powders - after every 50 hours when using liquid chemical.

IMPORTANT: Do not operate the pump dry!

Be certain Suction Line Valve is opened when spraying is resumed. Damage to Spray Pump will result when operating the Sprayer with Valve closed.

BELT TENSION:

⚠ DANGER

ROTATING PULLEYS AND BELTS CAN CAUSE SERIOUS INJURY.

- **Keep hands, feet and clothing clear while engine is running.**
- **Stop engine before attempting any belt adjustment.**

The best tension for a V belt drive is the lowest tension at which the Belt will not slip under the highest load condition. Too much tension shortens Belt and Bearing life.

Keep Belt and Pulley free from any foreign material which may cause slippage. If a V belt slips, tighten it.

Check the tension on a new drive Belt **frequently** during the **first day** of operation and periodically thereafter.

Check and maintain the clearances between all Belt Guides and the outside surfaces of the Belts at 1/8 inch.

After every 200 hours of operation, check the tension of all Belts and clearances of Belt Guides. If a Belt shows signs of cracks or fraying, install a new Belt.

MAINTENANCE

CENTRIFUGAL PUMP SEAL PROBLEM TROUBLESHOOTING

Trouble	Probable Cause	Remedy
1. Cracked or broken stationary seat(ceramic)	Seal ran dry and heated up. When liquid reached seal faces it was cooler, causing thermal cracks.	Check to insure seal chamber is full of liquid before starting pump. On high temperature application, insure proper flushing at seal surfaces
2. Carbon washer scored grooved.	Dirty System.	Have system cleaned and flushed.
3. Carbon washer worn unevenly.	Seal improperly installed.	Check installation instructions for proper assembly.
4. Rubber bellows of seal are hard and brittle. Rapid carbon wear.	Pump ran dry or cavitated.	Check to insure seal chamber is full of liquid before starting pump.
5. Retainer drive tabs badly worn or broken.	Periodic loss of lubrication at seal faces.	Insure proper flushing at seal faces.
6. Flexible bellows broken.	Seal improperly installed.	Check installation instructions for proper assembly.
7. Seal wears out shaft.	Check bearings for shaft end play. Check bearings for shaft radial movement. Check Shaft straightness.	Replace bearings. Replace Shaft.

MAINTENANCE

Always flush pump with water, or neutralizing agent before servicing.

Refer to the illustrated Parts List for part ordering information.

Pump Housing Disassembly
In most cases, seal replacement requires disassembly of only the pump half of the unit.

1. Remove the four casing cap screws with 9/16" box end wrench. Tap pump casing on discharge port with rubber hammer, if necessary, to break loose from mounting flange. Check inside of pump casing including suction port. If badly eroded (or damaged), pump casing should be replaced.

2. To remove the impeller nut, clamp the flange in a vise and insert a large screwdriver or file (at least 10" long) into impeller vanes to prevent impeller from turning when loosening nut. Use a 5/8" box end or socket wrench to remove the impeller nutby turning it counter-clockwise. See FIG. 6.

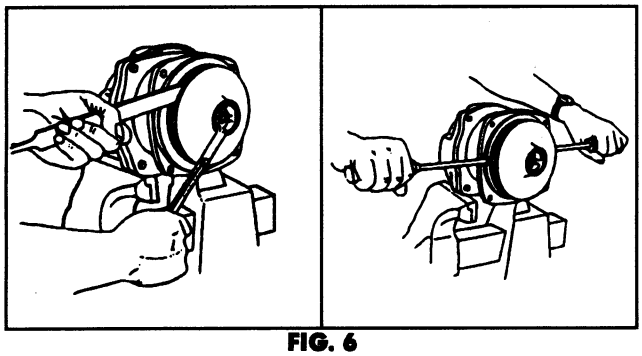

FIG. 6

3. Once nut is removed, place a screwdriver on each side (FIG. 6) behind the impeller and pry away from the mounting flange. Remove woodruff key from the shaft. Remove O-ring from the mounting flange. Remove O-ring and discard. O-ring should always be replaced.

Pump Seal Removal

1. Lightly lubricate shaft for easier removal of seal. Using two screwdrivers positioned opposite each other, pry the rotary portion of the seal from the shaft. See FIG. 7.

2. Remove stationary seat and boot by prying out with two small screwdrivers in manner similar to impeller removal. (Important: The seal will be damaged by removal in this manner. A new seal and rubber gasket MUST be used when pump is reassembled.)

Clean-Up of Pump Housing

1. Using a circular bottle-type wire brush with air or hand drill, clean the discharge port, suction port and the sealing areas of the O-ring on the pump casing and mounting flange.

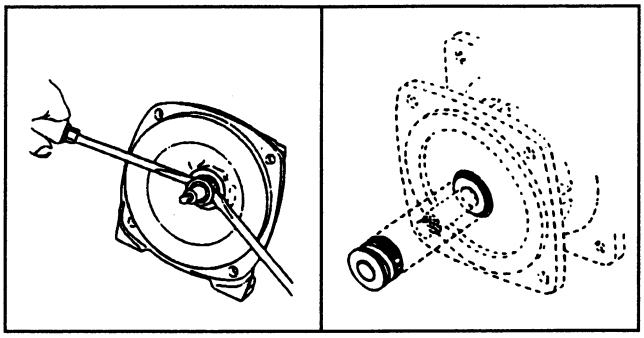

FIG. 7

2. After wire brush cleaning, it is recommended that the pump casing and mounting flange be further cleaned in a solvent tank to remove rust and corrosion particles.

Seal Replacement/Pump Housing Reassembly

Be extremely careful with the new seal. Take special care not to scratch the lapped sealing faces of the rotary washer and stationary seat.

1. Lubricate seal cavity in mounting flange with WD-40, LPS or equivalent.

2. Install the stationary portion of the mechanical seal by sliding over the shaft with the ceramic side out.

IMPORTANT: Make sure both seal cavity and seal are clean and lubricated. Never run the sealing faces dry.

3. To seat the seal in the seal cavity, use a piece of 3/4" PVC pipe 4" to 6" in length. Press it in firmly and squarely. Lubricate sealing surface on seal after it is seated.

4. To install the rotary portion of the mechanical seal, place it over the shaft with the carbon side facing in, and press until it bottoms out against the stationary portion. See FIG. 7.

5. Insert key into shaft key slot. Place impeller on shaft. Put impeller nut on shaft end,and using a large screwdriver or file in the impeller vanes for support, tighten impeller nut securely.

6. Install O-ring on mounting flange. Replace O-ring if worn or damaged.

7. Place pump casing on mounting flange, insert and tighten bolts evenly.

STORAGE

FLUSH PUMP AFTER USE

One of the most common causes for faulty pump performance is "gumming" or corrosion inside the pump. Flush the pump and entire system with a solution that will chemically neutralize the liquid pumped. Mix according to manufacturer's directions. This will dissolve most residue remaining in the pump, leaving the inside of the pump clean for the next use.

TO PREVENT CORROSION

After cleaning the pump as directed above, flush it with a permanent type automobile antifreeze (Prestone, Zerex, etc.) containing a rust inhibitor. Use a 50% solution - that is, half antifreeze and half water, or fill pump with FLUID FILM and then drain it. A protective coating of FLUID FILM will remain on the inner pump surfaces. Save the excess FLUID FILM for the next application. Plug the ports to keep out air during storage. For short periods of idleness, non-corrosive liquids may be left in the pump, BUT AIR MUST BE KEPT OUT. Plug ports or seal port connections.

IMPORTANT: FREEZING TEMPERATURES MAY DAMAGE THE PUMP & CONTROL VALVE IF THE WATER IS NOT DRAINED COMPLETELY!

SERVICING AFTER STORAGE:

Flush the entire spraying system with clean water and detergent.

Flush the entire spraying system again with clean, clear water to rinse.

Drain entire spraying system.

STORAGE AND DISPOSAL OF CHEMICALS:

Follow chemical manufacturer's recommendations for storage and disposal of chemicals.

NOTES:



Helping you put quality into play.™



Helping you put quality into play.™

TABLE OF CONTENTS

SAFETY ..... 1,2 & 3
DECALS 2
CONTROLS 3
BEFORE SPRAYING ..... 4,5 & 6
- NOZZLE SELECTION 4
- INITIAL SYSTEM SET-UP 6
- FILLING SOLUTION TANK 6
- FILLING FRESH WATER WASH TANK ..... 6 & 7

OPERATION 7
- USING THE SPRAYER 7
- AFTER SPRAYING 7

PREVENTIVE MAINTENANCE 8
MAINTENANCE ..... 9 & 10
- PUMP SEAL TROUBLESHOOTING 9

STORAGE 11

The Toro Promise
A One Year Limited Warranty

The Toro Company promises to repair your Model 41119 Manual Spray System for the Multi-pro™ 1100 Vehicle if defective in materials or workmanship. The following time periods from the date of purchase apply special warranty terms, on certain components, may be offered through The Toro Company by the component manufacturers:

Commercial Products.....1 Year

The cost of parts, labor and transportation are included.

If you feel your TORO Product is defective and wish to rely on The Toro Promise, the following procedure is recommended:

1. Contact your Authorized TORO Distributor or Commercial Dealer (the Yellow Pages of your telephone directory is a good reference source).

2. The TORO Distributor or Commercial Dealer will advise you on the arrangements that can be made to inspect and repair your product.

3. The TORO Distributor or Commercial Dealer will inspect the product and advise you whether the product is defective and, if so, make all repairs necessary to correct the defect without an extra charge to you.

If for any reason you are dissatisfied with the distributor's analysis of the defect or the service performed, you may contact us.

Write:

TORO Commercial Products Service Department
8111 Lyndale Avenue South
Bloomington, MN 55420-1196

The above remedy of product defects through repair by an Authorized TORO Distributor or Commercial Dealer is the purchaser's sole remedy for any defect.

THERE IS NO OTHER EXPRESS WARRANTY. ALL IMPLIED WARRANTIES OF MERCHANTABILITY AND FITNESS FOR USE ARE LIMITED TO THE DURATION OF THE EXPRESS WARRANTY.

Some states do not allow limitations on how long an implied warranty lasts, so the above limitation may not apply to you.

This Warranty applies only to parts or components which are defective and does not cover repairs necessary due to normal wear, misuse, accidents, or lack of proper maintenance. Regular, routine maintenance of the unit to keep it in proper operating condition is the responsibility of the owner.

All warranty repairs reimbursable under The Toro Promise must be performed by an Authorized Toro Commercial Dealer or Distributor using Toro approved replacement parts.

Repairs or attempted repairs by anyone other than an Authorized TORO Distributor or Commercial Dealer are not reimbursable under The TORO Promise. In addition, these unauthorized repair attempts may result in additional malfunctions, the correction of which is not covered by warranty.

THE TORO COMPANY IS NOT LIABLE FOR INDIRECT, INCIDENTAL OR CONSEQUENTIAL DAMAGES IN CONNECTION WITH THE USE OF THE PRODUCT INCLUDING ANY COST OR EXPENSE OF PROVIDING SUBSTITUTE EQUIPMENT OR SERVICE DURING PERIODS OF MALFUNCTION OR NON-USE.

Some states do not allow the exclusion of incidental or consequential damages, so the above exclusion may not apply to you.

This warranty gives you specific legal rights, and you may also have other rights which vary from state to state.

COUNTRIES OTHER THAN THE UNITED STATES OR CANADA

Customers who have purchased TORO products exported from the United States or Canada should contact their TORO Distributor (Dealer) to obtain guarantee policies for your country, province, or state. If for any reason you are dissatisfied with your Distributor's service or have difficulty obtaining guarantee information, contact the TORO importer. If all other remedies fail, you may contact us at The Toro Company.

Compliance with Radio Interference Regulations Certified.