FORM NO. 93-1048

TORO®

MODEL NO. 41120-50001 & UP
MODEL NO. 41128-50001 & UP
MODEL NO. 41020-50001 & UP
MODEL NO. 41021-50001 & UP
MODEL NO. 41130-50001 & UP

OPERATOR'S MANUAL

PRO-CONTROL™ SPRAY SYSTEM
FOR THE MULTI-PRO 1100™ VEHICLE

To assure maximum safety, optimum performance, and to gain knowledge of the product, it is essential that you or any other operator of this Vehicle read and understand the contents of this manual before the engine is ever started. Pay particular attention to the SAFETY INSTRUCTIONS highlighted by the triangular safety alert symbol.

⚠ The safety alert symbol means CAUTION, WARNING or DANGER - personal safety instruction. Failure to comply with the instruction may result in personal injury.

⚠ SAFETY INSTRUCTIONS

Keep this Operator's Manual in the plastic tube behind the operator seat.

It is very important that all persons operating this equipment have easy access to these instructions at all times!

Carefully read and follow the "Set-Up" Instructions that are provided with this equipment and the Safety Instructions in the Multi-Pro™ Operator's Manual.

RECOGNIZE SAFETY INFORMATION

⚠ This safety-alert symbol is used to call attention to a **dangerous** situation, which could result in serious injury or death to the operator or a bystander.

Safety, mechanical and some general information in this manual are emphasized. **DANGER, WARNING** and **CAUTION** identify safety messages. Whenever the triangular safety symbol appears, it is followed by a safety message that must be read and understood. For more details concerning safety, read the Safety Instructions on this page and page 2. **IMPORTANT** identifies special mechanical information and **NOTE** identifies general information worthy of special attention.

These instructions are provided as a guide for the safe operation and maintenance of this equipment. However, the operator's personal safety, as well as those persons in the work area, will depend on the careful actions and good judgement of the operator. **To reduce the potential for injury or death, comply with the following safety instructions.**

BEFORE OPERATING:

1. Operate this machine only after reading and understanding the contents of this manual. A replacement manual is available by sending complete model and serial number to: Hahn, Inc., 1625 N. Garvin, Evansville, IN 47711.

2. Learn how to operate the Sprayer and how to use the controls properly. DO NOT let anyone operate this equipment without first receiving thorough instructions.

3. Keep all shields, safety devices and decals in place. If a shield, safety device or decal is malfunctioning, illegible or damaged, repair or replace it before operating the machine.

4. Chemicals can injure persons, animals, plants, soils or other property. To eliminate environmental damage and personal injury:

A. Select the proper chemical for the job.

B. Follow manufacturer's instructions on chemical container labels. Apply and handle chemicals as recommended.

C. Handle and apply chemicals with care. Wear goggles and other necessary protective equipment. Handle chemicals in well ventilated areas. Never smoke while handling chemicals.

D. Properly dispose of chemical container and unused chemicals.

©The Toro Company-1995
All Rights Reserved

⚠ SAFETY INSTRUCTIONS

WHILE OPERATING:

5. Drive the Vehicle safely.

A. Always SLOW the Vehicle when approaching and while making a turn.

B. Always SLOW the Vehicle when driving in unfamiliar areas or over rough terrain.

C. Always SLOW the Vehicle when changing the direction of travel or preparing to stop.

D. When turning or driving on slopes, always SLOW the Vehicle, then turn the vehicle to prevent loss of control and possible upset.

E. DO NOT make sudden or sharp turns. DO NOT suddenly change direction of travel on an incline, ramp, grade, slope or similar surface.

F. Always adjust the vehicle speed to allow for existing conditions such as wet, slick surfaces, low visibility, etc.

G. Be especially careful when driving a heavily loaded vehicle down an incline or slope. Drive the vehicle UP and DOWN the face of the slopes, inclines or grades whenever possible. DO NOT DRIVE ACROSS the face if at all possible. There is a risk of upsetting the vehicle, which can result in serious injury or death.

6. DO NOT OVERLOAD THE VEHICLE. Failure to position loads carefully can result in their shifting or tipping over. Distribute loads evenly, keeping them as low as possible to prevent them from becoming top-heavy.

7. Make certain everyone is clear of the machine before starting the engine to move the vehicle or to engage the Sprayer Pump drive.

8. Before backing up, look to the rear and assure no one is behind. Back up **slowly.**

9. Watch out for traffic when near or crossing roads. Always yield the right of way to pedestrians and other vehicles.

10. If equipment begins to vibrate abnormally, stop **immediately.** Shut off the vehicle engine and disengage all power. Repair all damage before commencing operation.

MAINTENANCE:

11. Before servicing or making any adjustments to the Sprayer:

A. Stop the Vehicle and set the parking brake.

B. Shut off the vehicle's engine and remove key from ignition.

C. Disengage all power and wait until all moving parts have stopped.

12. Keep all nuts, bolts and other fasteners tightened securely. Replace any shields removed during servicing or adjustments.

13. To be sure of optimum performance and safety, always purchase genuine TORO replacement parts and accessories. Replacement parts and accessories made by other manufacturers could be dangerous. Altering this equipment in any manner may affect the machine's operation, performance, durability or its use may result in injury or death. Such use could void the product warranty of the TORO Company.

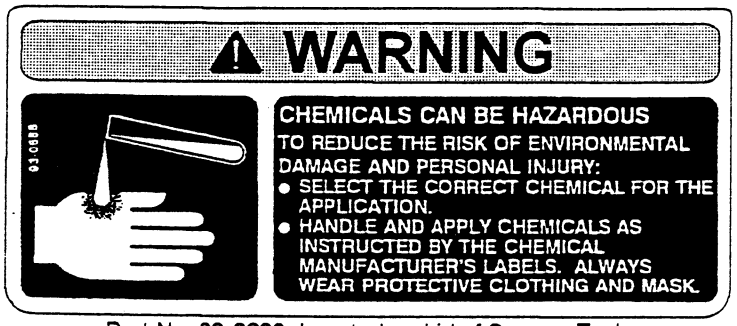

Part No. 93-0688: Located on Lid of Sprayer Tank.

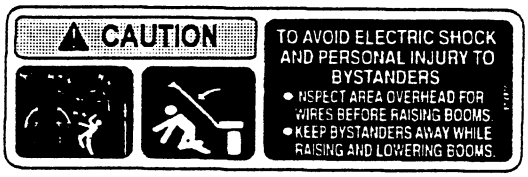

Part No. 87-0570: Located on Rear Tank Band.



Part No. 93-0800: Located on side of Clean Water Wash Tank Saddle.

INTRODUCTION

The Toro Pro-Control™ Spray System is designed to improve the accuracy and uniformity of spray applications. Its performance relies on the installation and preventive maintenance of the complete Sprayer. This Manual provides a simple step-by-step procedure for installing and operating the Toro Pro-Control™ Spray System.

The Toro Pro-Control™ System consists of a computer based Control Console, a Speed Sensor, Turbine Type Flow Meter and a Motorized Control Valve. The Speed Sensor is mounted on the left rear wheel of the Vehicle. Appropriate cabling is furnished for installation.

The operator sets the target volume per area to be sprayed and the Control Console automatically maintains the flow regardless of vehicle speed or gear selection. A manual override switch allows the operator to manually control flow for system check out spot spraying. Actual volume per area being applied is displayed at all times. The Pro-Control additionally functions as an area monitor, speed monitor and volume totalizer.

CONTROLS

NOTE: "Right", "Left", "Front" and "Rear" are referenced while seated in the operator's position.

PUMP ENGAGEMENT LEVER: Pivot the pump engagement lever DOWN to lower the centrifugal pump and ENGAGE the drive belt. Pull the lever UP to DISENGAGE the drive belt. See FIG. 1.

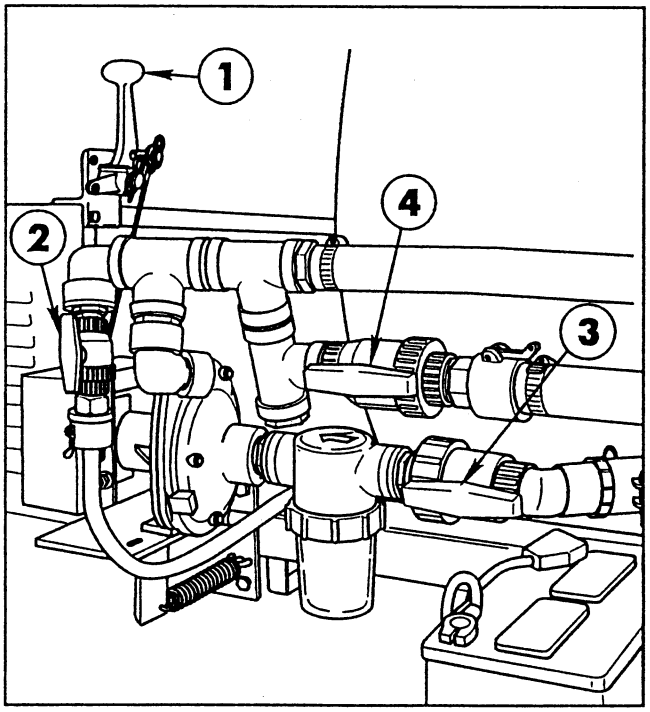

FIG. 1

1. Pump Engagement Lever
2. Agitator Valve Handle
3. Suction Valve Handle
4. By-Pass Valve Handle

AGITATOR VALVE HANDLE: Opens and closes the Agitator Valve to activate, adjust or stop the agitation of the spray solution in the Tank.

SUCTION VALVE HANDLE: Opens and closes the Suction Line Valve. Close during maintenance to the Suction Line Strainer or Centrifugal Pump.

IMPORTANT! The Pump will be damaged if it is activated with the Suction Line Valve closed, or before the tank contains enough liquid to flood the pump.

BY-PASS VALVE: Use to adjust and maintain the maximum pressure in the spraying system.

CONSOLE COMPUTER: Receives data for desired rate of application and automatically maintains that rate. See FIG. 2.

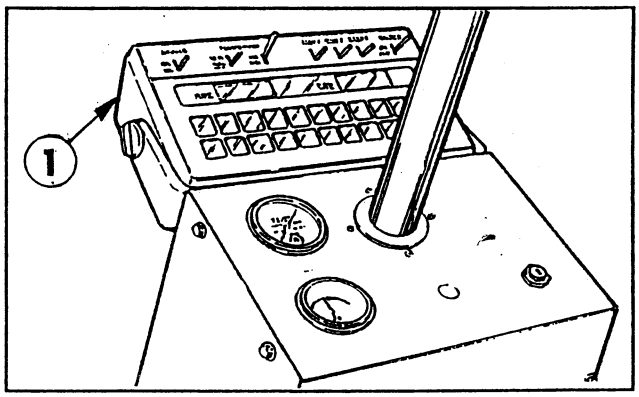

FIG. 2

1. Console Computer

CONSOLE FEATURES

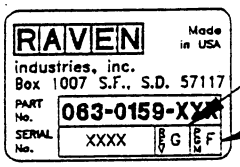

Console REV. (Revision) can be determined by letter stamped in REV. box on label.

Console PGM (Program) can be determined by letter stamped in PGM box on label.

IMPORTANT: This Console requires selection of area measurement in **US** (acres); **SI** [hectares] or **TU** {1,000 sq. ft.} and type of speed sensor **SP1** (wheel drive, etc.) or **SP2** (radar) speed sensor. **(The Toro Pro-Control uses the SP1 wheel drive sensor.)**

Selects manual or fully automatic control. Can automatically control two rates.

POWER - Turns Console power OFF or ON. Turning Console OFF does not affect data stored in the computer.

Manual override control provides capability for spot spraying.

Booms can be controlled individually, or all at once with MASTER ON/OFF switch.

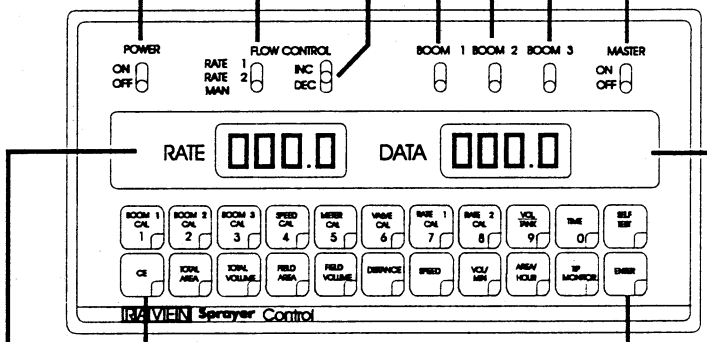

Displays operating rate of application.

Displays function and calibration data.

CE - Use like you do CE key on a calculator. This key is also used to select an area base measurement of US (acres), SI (hecatres), or TU (1,000 sq. ft.).

ENTER - Used only to enter data into the console.

CALIBRATION KEYS - Used to enter data into the Console to calibrate the system.

BOOM 1 CAL	Length of Boom 1
BOOM 2 CAL	Length of Boom 2
BOOM 3 CAL	Length of Boom 3
SPEED CAL	Determined by Wheel Size
METER CAL	Flow Meter Calibration Number
VALVE CAL	Control Valve Response Time
RATE 1 CAL	Target Application Rate
RATE 2 CAL	Target Application Rate
SELF TEST	Simulates vehicle speed

FUNCTION KEYS - Used to display data.

TOTAL AREA	Total Area Sprayed
TOTAL VOLUME	Total Volume Sprayed
FIELD AREA	Field Area Sprayed
FIELD VOLUME	Volume Applied to Field
DISTANCE	Distance Traveled
SPEED	Speed of Vehicle
VOLUME/MIN	Volume Sprayed per Minute at Speed Being Traveled
VOLUME/ TANK	Volume Remaining in Tank
AREA/HOUR	Area Sprayed per Hour at Speed Being Traveled
TIME	24 hour clock (military time)

BEFORE SPRAYING

CONSOLE CALIBRATION:

CALCULATING "BOOM CAL" (Boom 1, Boom 2, Boom 3)

Boom cal is calculated by multiplying the number of spray tips times the tip spacing. For the Toro Pro-Control™, having nozzles at 20" spacing, the Console should be programmed as follows: **"Boom 1 (left)" - 80: "Boom 2 (center)" - 60: "Boom 3 (right)" - 80.**

CALCULATING "SPEED CAL"

1. Place chalk mark or tape on vehicle tire, on which Speed Sensor is mounted. See FIG. 3.

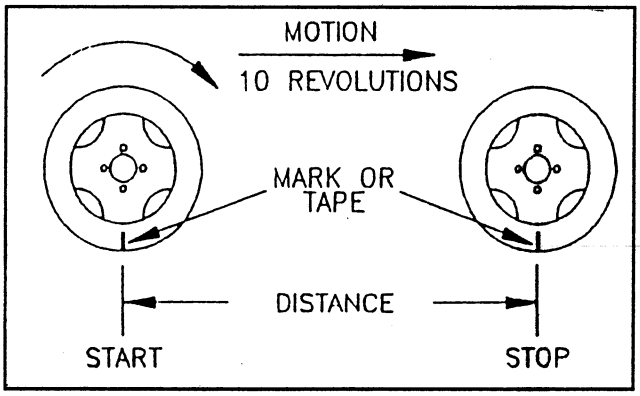

FIG. 3.

2. Mark initial spot on the ground.

3. Drive vehicle straight ahead counting 10 revolutions of the wheel with the mark stopping at the same position as starting.

4. Measure distance from start mark in inches. [Centimeters]. Round off fractions. **This measurement should be approximately 706".**

5. Write down this SPEED CAL calibration number for future reference when programming the Control Console.

NOTE: This measurement is critical to the performance of the Toro Pro-Control ™ Spray System. MEASURE CAREFULLY. Be sure tire is properly inflated before measuring. Measure tire in type of soil in which you will be spraying and with Carrier Tank one half full. Circumference of tire will vary when measured in soft soil versus hard packed soil. For best results, measure several times and average the results. Re-measure periodically.

CALCULATING "METER CAL"

The Flow meter calibration number is stamped on the yellow tag attached to each Flow Meter. This number is to be used for "gallons per acre" applications. To convert this number to desired units of measure (ozs, lbs, or liters per area) see conversion formulas on page 6. Record this number in a safe place in case the tag is ever lost or disfigured.

CALCULATING "VALVE CAL"

1. The initial Valve calibration number for VALVE CAL is 2611. The VALVE CAL number is used to control response time of the Motorized Control Valve to the change in vehicle speed. After operating the system, you may desire to refine this number. See definitions below:

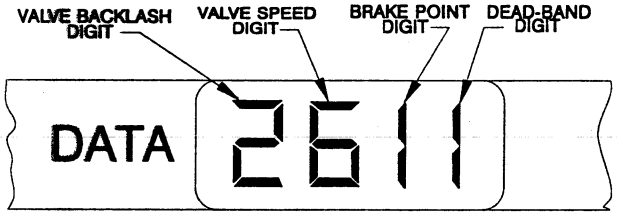

Valve Backlash -
Controls the time of the first correction pulse after a change in correction direction is detected **(Inc. to Dec. or Dec. to Inc.).**

Range: 1 to 9 1 - Short Pulse, 9 - Long Pulse

Valve Speed Digit -
Controls response time of Control Valve motor. **CAUTION: Running the Control Valve too fast will cause the system to oscillate.**

Range: 1 to 9 1 - Slow, 9 - Fast

Brake Point Digit Percent-
Sets the point at which the Control Valve motor begins braking, so as not to over shoot the desired rate. Digit is percent away from target rate.

Range: 0 to 9 0 = 5%, 1 = 10%, 9 = 90%

Dead-Band Digit -
Allowable difference between target and actual application rate, where rate correction is not performed.

Range: 1 to 9 1 = 1%, 9 = 9%

BEFORE SPRAYING

CONSOLE CALIBRATION (CONT'D):

CALCULATING "RATE 1" AND "RATE 2"

Refer to the Chemical Manufacturer's instructions on the chemical container label to determine the application rate of the chemical to be sprayed.

Enter the application rate (with decimal) in RATE 1 and RATE 2. Enter the rates in gallons per acre (US mode), gallons per 1000 sq. ft. (TU mode) or liters per hectare (SI mode) depending on the base measurement selected. **NOTE:** RATE 2 should not differ more than 20% from RATE 1. If you do not use a second rate, enter the same rate in both RATE 1 and RATE 2.

See the nozzle charts on page 7 to be sure that your spray nozzles have the capacity necessary to achieve the application rate selected.

To select the proper nozzle, you need to know:

1. Recommended chemical application rate in gallons per acre, gallons per 1000 sq. ft. or liters per hectare.

2. Average Vehicle speed in Miles per hour or kilometers per hour.

3. Nozzle spacing (20 inches or 50 centimeters.)

With this information you can calculate the volume per minute per nozzle, using the formulas below.

US FORMULA:

$$\text{G.P.M. (Per Nozzle)} = \frac{\text{G.P.A. x M.P.H. X 20 ins.}}{5940}$$

TU (Turf) FORMULA:

$$\text{G.P.M. (Per Nozzle)} = \frac{\text{G.P.K. x M.P.H. x 20 ins.}}{137}$$

SI (METRIC) FORMULA:

$$\text{lit/min (Per Nozzle)} = \frac{\text{lit/ha x km/h x 50 cm}}{60{,}000}$$

Use G.P.M. (lit/min) and Pressure to select appropriate nozzle from chart on page 7.

EXAMPLE (US FORMULA)
Application Rate = 75 Gallons/Acre
Vehicle Speed = 4 M.P.H.
Nozzle Spacing = 20 inches

$$\frac{\text{75 G.P.A. x 4 M.P.H. x 20}}{5940} = \text{1.00 G.P.M. (per nozzle)}$$

With 1.00 G.P.M. and a pressure of 40 P.S.I. you would select Nozzle No. 40444.

EXAMPLE (TU FORMULA):
Application Rate = 1.70 Gal./1000 sq. ft.
Vehicle Speed = 4 M.P.H.
Nozzle Spacing = 20 inches

$$\frac{\text{1.70 G.P.K. x 4 M.P.H. x 20}}{137} = \text{1.00 G.P.M. (per nozzle)}$$

EXAMPLE (SI FORMULA):
Application Rate = 907 lit/hectare
Vehicle Speed = 5 km/h
Nozzle Spacing = 50 cm

$$\frac{\text{907 lit/ha x 5 km/h x 50}}{60{,}000} = \text{3.78 lit/min. (per nozzle)}$$

With 3.78 G.P.M. and a pressure at 275 kPa you would select nozzle No. 40444

SYMBOL DEFINITIONS:

GPM	- Gallons per minute
lit/min	- Liters per minute
dl/min	- Deciliter per minute
PSI	- Pounds per square inch
kPa	- Kilopascal
GPA	- Gallons per acre
lit/ha	- Liter per hectare
ml/ha	- Milliliter per hectare
GPK	- Gallons per 1,000 sq. ft.
mm	- Millimeters
cm	- Centimeters
dm	- Decimeters
m	- Meter
MPH	- Miles per hour
km	- Kilometers
km/h	- Kilometers per hour
US	- Volume per ACRE
SI	- Volume per HECTARE
TU	- Volume per 1,000 sq. ft.

LIQUID CONVERSIONS

U.S. Gallons x 128 = Fluid Ounces
U.S. Gallons x 3.785 = Liters
U.S. Gallons x 0.83267 = Imperial Gallons
U.S. Gallons x 8.34 = Pounds (Water)

LENGTH

1 millimeter (mm) = 0.039 inch
1 centimeter (cm) = 0.393 inch
1 meter (m) = 3.281 feet
1 kilometer (km) = 0.621 mile
1 inch = 25.4 millimeters; 2.54 centimeters
1 mile = 1.609 kilometers

PRESSURE

1 psi = 6.89 kPa

AREA

1 square meter = 10.764 sq. feet
1 hectare (ha) = 2.471 acres; 10,000 sq.meters
1 acre = 0.405 hectare; 43,560 sq. ft.
1 sq. mile = 640 acres; 258.9 hectares

FINDING THE CORRECT NOZZLE SIZE

US AND TU FORMULAS

TORO Part No.	Nozzle Number Color-Code	Pressure (PSIG)	Capacity 1-Nozzle (GPM)	APPLICATION RATES FOR NOZZLES 20" SPACING							
				GALLONS PER ACRE				GALLONS PER 1000 SQ. FT.			
				3 MPH	4 MPH	5 MPH	6 MPH	3 MPH	4 MPH	5 MPH	6 MPH
92-3977	RA-4	20	.28	28	21	17	14	.64	.48	.39	.32
	120°	30	.35	34	26	20	17	.78	.60	.46	.39
	¼"	40	.40	40	30	24	20	.92	.69	.55	.46
	Yellow	50	.45	44	33	27	22	1.01	.76	.62	.51
43082	RA-5	20	.36	35	26	21	17.5	.80	.60	.48	.40
	120°	30	.44	42	32	26	21	.96	.73	.60	.48
	¼"	40	.50	50	37	30	25	1.15	.85	.69	.57
	Dk. Blue	50	.56	56	42	33	28	1.29	.96	.76	.64
41088	RA-6	20	.43	42	32	25	21	.96	.73	.57	.48
	120°	30	.52	52	39	31	26	1.19	.90	.71	.60
	¼"	40	.60	60	45	36	30	1.38	1.03	.83	.69
	Dk. Green	50	.67	66	50	40	33	1.52	1.15	.92	.76
42828	RA-8	20	.57	56	42	34	28	1.29	.96	.78	.64
	120°	30	.70	68	51	41	34	1.56	1.17	.94	.78
	¼"	40	.80	80	59	48	40	1.84	1.35	1.10	.92
	Red	50	.90	88	66	53	44	2.02	1.52	1.22	1.01
40444	RA-10	20	.71	70	53	42	35	1.61	1.22	.96	.80
	120°	30	.87	86	64	51	43	1.97	1.47	1.17	.99
	¼"	40	1.0	100	74	59	50	2.30	1.70	1.35	1.15
	Tan	50	1.1	110	83	66	55	2.53	1.91	1.52	1.26
92-0027	RA-15	20	1.1	106	79	63	53	2.43	1.81	1.45	1.22
	120°	30	1.3	128	96	77	64	2.94	2.20	1.77	1.47
	¼"	40	1.5	148	111	89	74	3.40	2.55	2.04	1.70
	Lt. Blue	50	1.7	166	125	100	83	3.81	2.87	2.30	1.91
93-0903	RA-25	20	1.8	178	134	104	88	4.09	3.08	2.39	2.02
	140°	30	2.2	218	163	128	108	5.01	3.75	2.94	2.48
	¾"	40	2.5	248	186	148	124	5.70	4.28	3.40	2.85
	Black	50	2.8	277	208	168	140	6.37	4.78	3.86	3.22

SI FORMULA

TORO Part No.	Nozzle Number Color-Code	Pressure (kPa)	Capacity 1-Nozzle (L/min)	APPLICATION RATES FOR NOZZLES 50 cm SPACING			
				LITERS PER HECTARE			
				5 km/h	6 km/h	8 km/h	10 km/h
92-3977	RA-4	150	0.56	134	112	84	67
	120°	200	0.64	155	129	97	77
	¼"	275	0.76	181	151	113	91
	Yellow	350	0.85	205	171	128	102
43082	RA-5	150	1.40	335	279	209	167
	120°	200	1.61	387	322	242	193
	¼"	275	1.89	453	378	283	227
	Dk. Blue	350	2.13	512	426	320	256
41088	RA-6	150	1.67	402	335	251	201
	120°	200	1.93	464	387	290	232
	¼"	275	2.27	544	453	340	272
	Dk. Green	350	2.56	614	512	384	307
42828	RA-8	150	2.23	536	447	335	268
	120°	200	2.58	619	516	387	309
	¼"	275	3.02	726	605	453	363
	Red	350	3.41	819	682	512	409
40444	RA-10	150	2.79	670	558	419	335
	120°	200	3.22	773	645	483	387
	¼"	275	3.78	907	756	567	453
	Tan	350	4.26	1023	853	640	512
92-0027	RA-15	150	4.18	1008	840	630	504
	120°	200	4.84	1176	980	735	588
	¼"	275	5.67	1368	1140	855	684
	Lt. Blue	350	6.40	1536	1280	960	768
93-0903	RA-25	150	6.98	1675	1396	1047	836
	140°	200	8.06	1934	1612	1208	968
	¾"	275	9.45	2268	1888	1418	1132
	Black	350	10.66	2558	2132	1598	1280

BEFORE SPRAYING

CONSOLE PROGRAMMING:

After all installation procedures have been completed and Console power is turned "ON", the Console will flash "CAL" in the RATE display. This means you must calibrate or program the Console before it can be operated. This is a one-time operation which does not have to be repeated unless the Console or Vehicle battery wires are disconnected... or the Vehicle battery is discharged...in which case, the Console would have to be re-programmed.

NOTE: Turning the POWER ON/OFF switch to "OFF" does not affect the Console memory. All data is retained.

While the calibration figures shown below are useful guidelines, calculations should be carried out for your particular machine and refined to accommodate varying operating conditions and desired applications.

DATA ENTRY:

When entering data into the console, the entry sequence is always the same. **(NOTE: DATA MUST BE ENTERED INTO THE FIRST EIGHT KEYS).**

1. Depress the key in which you wish to enter data.

2. Depress the "ENTER" key. An "E" will illuminate in the DATA display.

3. Depress the keys corresponding to the number you wish to enter (i.e., "1", "0", "2", "4"). The numbers will be displayed in the DATA display as they are entered.

4. Complete the entry by again depressing the "ENTER" key.

INITIAL CONSOLE PROGRAMMING:

If an entry selection error is made during steps 1,2,3, and 4, the Console can be reset by depressing  for 20 seconds (data displays US.)

1. Display US (volume per acres), SI (volume per hectares), or TU (volume per 1000 sq. ft.)

a. Depressing momentarily  steps the DATA display from US (acres) to SI.

b. Depressing momentarily  steps the DATA display from SI (Hectares) to TU.

c. Depressing momentarily  steps the DATA display from TU (1,000 sq. ft.) to US.

2. Selecting US, SI or TU

a. To select US, SI or TU, step  until the desired code is displayed in DATA display.

b. Momentarily depress  The DATA display will now display SP1.

3. Display SP1 or SP2 **(Toro Pro-Control™ uses only wheel drive SP1).**

a. Depressing momentarily  steps the DATA display from SP1 (wheel drives, etc.) to SP2.

b. Depressing momentarily  steps the DATA display from SP2 (Radar Sensor) to SP1.

4. Selecting SP1 or SP2.

a. To select SP1 or SP2, step with  until desired code is displayed in DATA display.

b. Momentarily depress  the DATA display will now display 0.

5. Enter BOOM 1 CAL (80) in key labeled: 

6. Enter BOOM 2 CAL (60) in key labeled: 

7. Enter Boom 3 CAL (80) in key labeled: 

8. Enter SPEED CAL in key labeled: 

9. Enter METER CAL calibration number in key labeled: 

10. Enter VALVE CAL calibration number (2611) in key labeled: 

11. Enter the Application Target Rate in gallons per acre, liters per hectare, gallons per 1000 sq. ft. you want to spray in the key labeled 

12. Enter a second target application rate in gallons per acre, liters per hectare or gallons per 1000 sq. ft. you want to spray in key labeled if desired.

NOTE: RATE 2 should not differ more than 20% from RATE 1. If you do not use a second rate, enter the same rate in both RATE 1 and RATE 2.

YOU HAVE NOW COMPLETED PROGRAMMING THE CONSOLE The flashing "CAL" will now extinguish. If not, repeat procedure starting at step 5.

BEFORE SPRAYING

INITIAL CONSOLE PROGRAMMING (Cont'd): You may also want to enter data in the keys labeled: VOL TANK 9 and TIME 0 although it is not required for operation of the system.

13. Key 9 "VOLUME TANK" (Optional) - Enter the amount of material in the Tank. This number must be re-entered each time the Tank is refilled. The function monitors Tank volume while spraying, based on application rate.

14. Key 0 "TIME" (Optional) - Enter time of day based on 24 hours. (i.e., 1:30 p.m. is 13:30), or enter "0" to measure elapsed time.

OTHER DISPLAY FEATURES:

1. To display TOTAL AREA covered, momentarily depress key labeled: TOTAL AREA

To "zero out" this total at any time, enter a "0" in this key.

2. To display TOTAL VOLUME sprayed, momentarily depress key labeled: TOTAL VOLUME

To "zero out" this total at any time, enter a "0" in this key.

3. To display FIELD AREA covered, momentarily depress key labeled: FIELD AREA

To "zero out" this total at any time, enter a "0" in this key.

4. To display FIELD VOLUME sprayed, momentarily depress key labeled: FIELD VOLUME

To "zero out" this total at any time, enter a "0" in this key.

5. To display DISTANCE (feet [m] traveled, momentarily depress key labeled: DISTANCE

To "zero out" this total at any time, enter a "0" in this key.

6. To display MPH [km/h], momentarily depress key labeled: SPEED

7. To display VOL/MIN (volume per minute) being sprayed at speed being traveled, momentarily depress key labeled: VOL/ MIN

To "zero out" this total at any time, enter a "0" in this key.

8. To display AREA/HOUR (area per hour) momentarily depress the key labeled: AREA/ HOUR

This is an actual calibration of the area per hour at the present speed you are traveling. It is not an average over time.

9. To display US, TI or TU and SP1 or SP2 after being selected, depress SELF TEST These selections will be alternately displayed.

10. The TIP Monitor button is not used on the Toro Pro-Control™ Spray System.

SELF TEST FEATURE

SELF TEST allows speed simulation for testing the system while the vehicle is not moving. Enter the simulated operating speed in the key labeled: SELF TEST

If 4 MPH [6.4 km/h] is desired, enter 4.0 [6.4]

Verify speed by depressing key labeled: SPEED 4.0 [6.4] will appear in the DATA display.

The SELF TEST speed will clear itself when motion of vehicle is detected by the Speed Sensor. A SPEED CAL value of 900 [230] or greater is recommended when operating in this mode.

SEQUENCE TO ACTIVATE DATA-LOCK*

1. Depress CE for 5 seconds, NEW CODE will appear.

2. Enter 4 digit code within 15 seconds.

EXAMPLE: For 1058 depress: BOOM 1 CAL 1 TIME 0 METER CAL 5 RATE 2 CAL 8 and ENTER

SEQUENCE TO CHANGE DATA-LOCK

1. Depress CE for 5 seconds, OLD CODE message will appear.

2. Enter 4 digit code within 15 seconds.

NEW CODE message will appear. Enter 4 digit code within 15 seconds.

EXAMPLE: For 1258, depress: BOOM 1 CAL 1 BOOM 2 CAL 2 METER CAL 5 RATE 2 CAL 8 and ENTER

ENTER MODE SEQUENCE WITH ACTIVATED DATA-LOCK

1. Depress the key into which you wish to enter data.

2. Depress ENTER, CODE message will appear. Enter your DATA LOCK CODE. If code is correct, "E" will appear. Now enter data normally.

* The DATA LOCK feature prohibits the entry of data without first entering the DATA LOCK CODE.

BEFORE SPRAYING

The DATA LOCK CODE may be cleared by entering a code of "0" or by removing Console power.

POWER DOWN DELAY FEATURE:

To conserve the Vehicle's 12-volt battery, the Power Down Delay should be set. In this "power down" mode, all data will be retained, but the time of day clock will not operate. The Power Down Delay is initially set at 10 days.

TO CHANGE DELAY TIME:

1. Depress "TIME" for 5 seconds and the current delay time will appear.

2. Reset the delay time by pressing "ENTER", the desired delay time (normally 1-2 days) and "ENTER".

CONSOLE ALARM FEATURE

Console alarm sounds if application rate is 30% or more away from target application rate for 5 seconds.

1. Displaying A on or A off.

   a. Depressing BOOM 1 CAL 1 for 5 seconds Displays A on (alarm on) or A off (alarm off).

2. Selecting A on or A off.

   a. To select A on or A off step with ∝ until desired code is displayed in Data display.

   b. Depressing any other key will lock that selection.

THE FEATURES LISTED BELOW ARE NOT NECESSARY TO THE OPERATION OF THE PRO-CONTROL™ SYSTEM, BUT ARE INCLUDED AND CAN BE ACCESSED AT THE OPERATOR'S OPTION.

DISPLAY MENU

Depress BOOM 1 CAL 1 for 7 seconds until DATA display shows "d on". Depressing ∝ key momentarily, steps the DATA display between "d on" and "doFF". "d on" means RATE displays target rate when actual rate is within a percentage of target rate. This percentage is determined by third digit of Valve CAL value as shown:

Brake point digit
(3rd digit) of Valve Cal 2 1 [2] 3

0=1% + Deadband	5=25% + Deadband
1=3% + Deadband	6=30% + Deadband
2=7% + Deadband	7=35% + Deadband
3=10% + Deadband	8=40% + Deadband
4=20% + Deadband	9=45% + Deadband

Actual rate is displayed if unit does not reach deadband within 10 seconds. "doFF" means RATE displays actual rate at all times.

LOW LIMIT FLOW SET POINT AND LOW LIMIT ALARM

Depress VOL/MIN until DATA display flashes. A low limit flow rate may now be entered.

If actual Volume Per Minute falls below this limit, the Control Valve stops closing, the Alarm sounds and the rate display flashes "-LL-". The low Limit value should be determined with all Booms"on". This value is automatically proportional to the percentage of Booms that are "on". (i.e. If the entered low limit is 4 GAL/MIN and half the Total Boom length is shut off, the Console automatically reduces the low limit to 2 GAL/MIN)

CONTROL VALVE DELAY

Depress SPEED CAL 4 until DATA display flashes. The left most digit is the Valve control delay digit. This feature allows the user to set a delay between the time the Booms are turned on and when the Console begins to control the flow rate. A value of 1-9 means a delay of 1-9 seconds respectively. A value of "0" means no delay. This delay is active if the time between turning off and turning on the Booms is less than 30 seconds.

BEFORE SPRAYING

INITIAL SYSTEM SET-UP:

1. Fill the Tank with water and open the Suction Line Valve. See FIG. 4.

IMPORTANT: The pump will be damaged if it is activated before it is completely filled with liquid. Be certain the suction line valve is open and liquid has reached the pump.

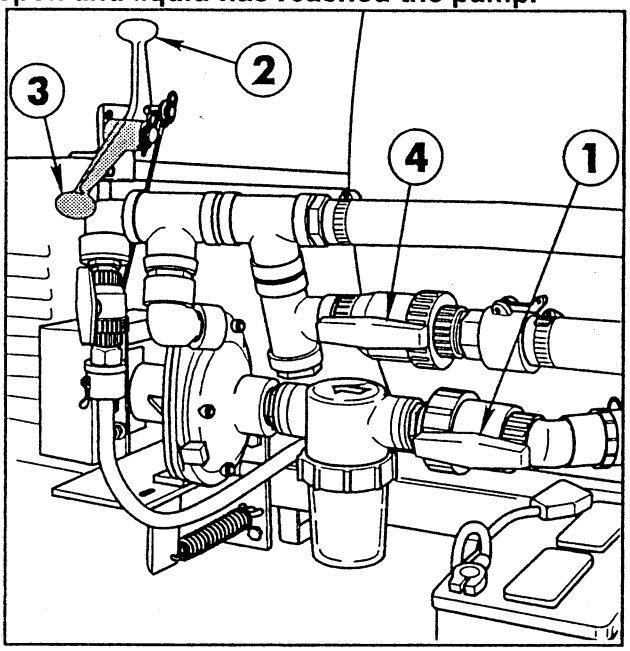

FIG. 4

1. Suction Valve Handle (open)
2. Pump Engagement Lever (disengaged)
3. Pump Engagement Lever (engaged)
4. By-Pass Valve Handle (open)

2. Take the vehicle out of gear and set the parking brake. Move the Pump Engagement Lever **UP** to the **disengaged** position. Start the engine and set the throttle at 3/4 to full RPM to represent your desired spraying speed.

3. Place MASTER ON/OFF to "ON" and BOOM ON/OFF switches to "OFF".

4. Place MAN/AUTO switch to "MAN".

5. Place POWER ON/OFF to "ON".

6. Verify that correct Boom widths and calibrations for Speed CAL, Meter CAL, Valve CAL, RATE 1 and RATE 2 have been entered in Console.

7. Use the "SELF TEST" feature as described on page 9.

8. Move the Pump Engagement Lever **DOWN** to the **engaged** position.

9. Operate BOOM ON/OFF switches to verify that each Boom Solenoid Valve is operating and that there are no plugged nozzles.

10. Place all BOOM ON/OFF switches to "ON".

11. Hold the MAN. ADJ. switch in **INCR.** position for approximately 12 seconds. This assures that motorized Control Valve is fully **open.**

12. Verify that the maximum pressure (shown on Pressure Gauge) and RATE can be achieved. Adjust pressure with ball valve in By-Pass Line to 80 p.s.i. **max.**

13. Adjust ball valve in Agitator Line for desired agitation. Verify that maximum pressure is still present at the Pressure Gauge.

14. Hold the MAN. ADJ. switch in **DECR.** position for approximately 12 seconds. This assures that motorized Control Valve is fully **closed.**

15. Verify that minimum pressure and RATE can be achieved.

INITIAL SYSTEM FIELD TEST:

1. Fill the Tank with water and open the Suction Line Valve. See FIG. 4.

IMPORTANT: The pump will be damaged if it is activated before it is completely filled with liquid. Be certain the suction line valve is open and liquid has reached the pump.

2. Drive Vehicle at desired spraying speed with Sprayer Booms off. Verify MPH readout on Console by depressing SPEED CAL.

3. Engage the Spray Pump, place MASTER ON/OFF switch to "ON" and BOOM ON/OFF switches to "ON".

4. Place the RATE 1/ RATE2 / MAN switch to RATE 1.

5. Increase or decrease vehicle speed by one MPH. The system should automatically correct the target application rate.

If the system is unable to correct to the desired RATE, check for an empty Tank, a plugged line, a malfunctioning Pump, improper Vehicle speed or a defect in the system.

If after eliminating the possibilities listed above, the system is unable to correct to the desired RATE, first review the "INITIAL SYSTEM SET-UP", then refer to TROUBLESHOOTING GUIDE" on pages 17, 18 AND 19.

BEFORE SPRAYING

INITIAL SYSTEM FIELD TEST(Cont'd):

5. At the end of each swath sprayed, switch the MASTER ON/OFF to "OFF" to shut off flow. This also shuts off the acreage totalizer.

6. Verify acres covered and gallons used.

FILLING THE SOLUTION TANK:

⚠ CAUTION

Chemicals can be hazardous! Read carefully the directions printed on the chemical manufacturer's labels before handling chemicals. Instructions on chemical manufacturer's container labels, regarding mixing proportions, should be read and strictly followed. The concentrate should not be poured into an empty Tank: fill Tank about one-half full with clean, clear water, add chemical concentrate and finish filling Tank with water.

Keep spray material from skin. If spray material comes in contact with body, wash it off immediately with clean water and detergent.

Always wear goggles and other protective equipment as recommended by the Chemical Manufacturer.

IMPORTANT: Do not add chemical to Tank until just before use. Follow the chemical manufacturer's instructions for mixing spray solution to obtain desired application rate.

FILL THE CLEAN WATER WASH TANK

NOTE: Fill Clean Water Wash Tank with clean water only. Check to assure tank is full before each operation.

In case of chemical contact with skin or eyes, a fresh water wash tank has been installed on the R.H. side of the vehicle.

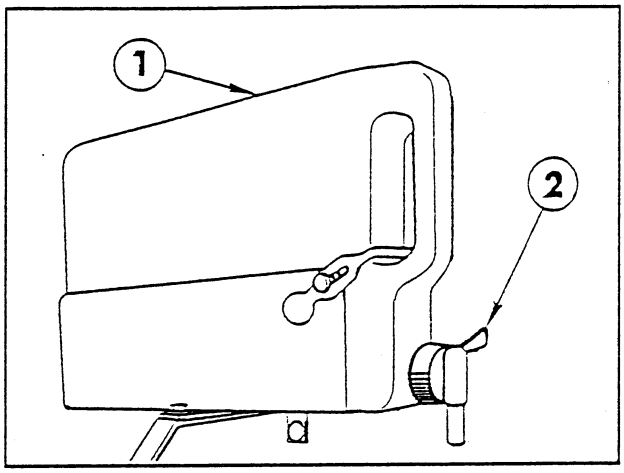

FIG. 5

1. Clean Water Wash Tank 2. Tank Spigot

1. Turn Tank Spigot to on position. See FIG. 5.

2. Hold contaminated area directly under water stream.

For future reference, pencil in your calibrations numbers in the spaces below.

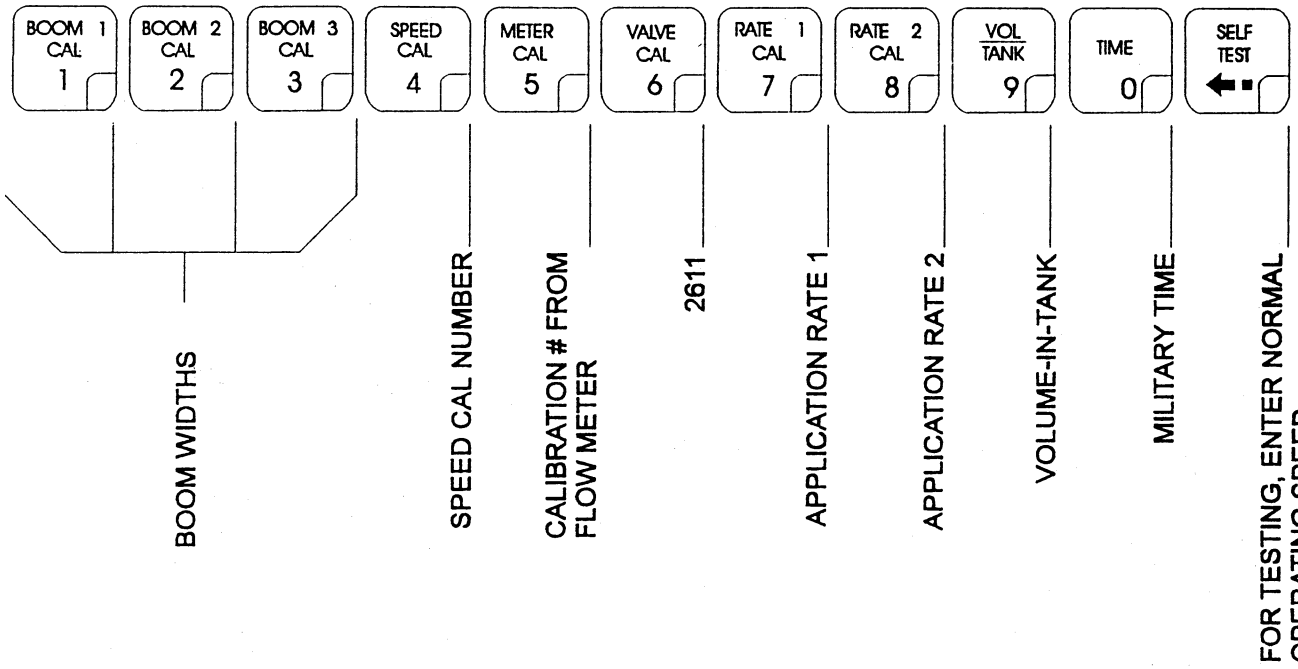

OPERATION

USING THE SPRAYER:

IMPORTANT: Check all of your equipment... make certain that all components are clean... including the Tank, Pump, Control Valves, Strainers, Check Valves, Hoses, Nozzles, Spray Tips and Suction Line Strainer.

With the Control Console programmed to achieve the application rate of the chemical selected, and after the initial Field Test to verify the program, proceed as follows:

1. Start the vehicle engine and position the throttle at full (or nearly full) speed to provide the necessary ground speed, pressure and volume.

2. Engage the Pump and use the Master ON/OFF Switch and individual Boom Switches, to control Boom sections.

IMPORTANT! While operating the Sprayer:

- Do not overlap areas that have been sprayed previously.
- Watch for plugged Nozzles. Replace all worn Nozzles or those producing streaky or uneven patterns.

3. Stop the spray flow **before** stopping the vehicle.

AFTER SPRAYING:

It is extremely important to carefully wash and clean the Tank after **every** use.

Not only the Tank but the Pump, Hoses, Nozzles, Screens, Filters, and the exterior of the Sprayer also should be cleaned.

Flush Pump After Use
One for the most common causes for faulty pump performance is "gumming" or corrosion inside the pump. Flush the pump and entire system with a solution that will chemically neutralize the liquid pumped. Mix according to the manufacturer's directions. This will dissolve most residue remaining in the pump, leaving the inside of the pump clean for the next use.

A **minimum** of three (3) rinses usually is required for all components of the Sprayer. The addition of a detergent cleaner may be advisable in the initial washing. directions for such an addition, if required, are included on the chemical container.

Cleaning of Sprayer should be accomplished in an area where there is no potential for the chemicals to be washed off in surface water or to enter subsurface drainage systems.

When Sprayer is not to be used for an extended period, refer to the STORAGE section of this Manual for the detailed instructions to prevent damage to the components.

PREVENTATIVE MAINTENANCE

Preventative maintenance is most important to assure long life of the Pro-Control Spray System. The following maintenance procedures should be followed on a regular basis:

Flush the entire spraying system as described on page 13 after each use. Failure to clean the system can result in a chemical residue which can plug the Flow Meter, Solenoids, Control Valve, Hoses and/or Nozzle Tips, and seriously damage the Centrifugal Pump.

Wash spray nozzles thoroughly with water. Blow out orifice, clean and dry. If orifice remains clogged, clean it with a soft bristled brush... never use a metal object.

Check all of the nozzles frequently to spot any inconsistencies in the spray pattern. Worn nozzle orifices which allow a greater volume of spray material to flow through the nozzle can cause an expensive loss in chemical and/or turf damage.

SUCTION STRAINER:

Turn off Suction Line Valve if Tank is full of spray solution. Remove the cap and clean the strainer screen when spraying wettable powders - after every 50 hours when using liquid chemical.

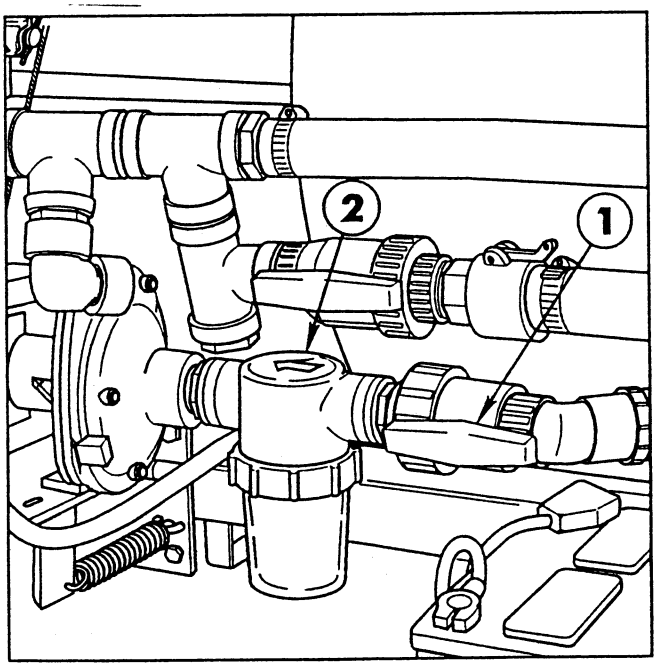

FIG. 6

1. Suction Line Valve (Open) 2. Suction Strainer

IMPORTANT: Do not operate the pump dry! Be certain Suction Line Valve is opened when spraying is resumed. Damage to Spray Pump will result when operating the Sprayer with Valve closed.

BELT TENSION:

⚠ DANGER

ROTATING PULLEYS AND BELTS CAN CAUSE SERIOUS INJURY.

- **Keep hands, feet and clothing clear while engine is running.**
- **Stop engine before attempting any belt adjustment.**

The best tension for a V belt drive is the lowest tension at which the Belt will not slip under the highest load condition. Too much tension shortens Belt and Bearing life.

Keep Belt and Pulley free from any foreign material which may cause slippage. If a V belt slips, tighten it.

Check the tension on a new drive Belt **frequently** during the **first day** of operation and periodically thereafter.

Check and maintain the clearances between all Belt Guides and the outside surfaces of the Belts at 1/8 inch.

After every 200 hours of operation, check the tension of all Belts and clearances of Belt Guides. If a Belt shows signs of cracks or fraying, install a new Belt.

CONTROL CONSOLE:

Always cover or otherwise protect the Control Console from moisture to prevent damage to the electronic system.

MAINTENANCE

FLOW METER:

Once per season the Flow Meter should be flushed and cleaned. Perform this procedure more often if suspension type products are being sprayed.

1. Thoroughly rinse and drain the entire spraying system.

2. Remove Flow Meter from Sprayer and flush with clean water to remove any chemicals.

3. Remove flange bolts from the Flow Meter. See FIG. 7.

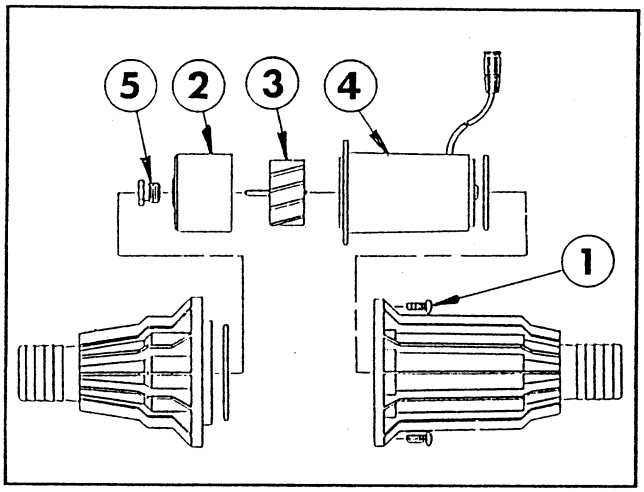

FIG. 7

1. Flange Bolt
2. Turbine Hub
3. Turbine
4. Transducer
5. Turbine Stud

4. Remove the turbine hub and turbine from inside Flow Meter.

5. Clean turbine and turbine hub of metal filings and any other foreign material, such as wettable powders. Confirm that turbine blades are not worn. Hold turbine hub and turbine in your hand and spin turbine. It should spin freely with very little drag.

6. If transducer assembly is replaced or if turbine stud is adjusted or replaced, verify the turbine fit before reassembling. Hold turbine hub with turbine on transducer. Spin turbine by blowing on it. Tighten turbine stud until turbine stalls. Loosen turbine stud 1/3 turn: the turbine should spin freely.

7. Reassemble Flow Meter.

8. Using a low pressure 5 PSI [50 kPa] jet of air, verify that the turbine spins freely. If there is drag, loosen the turbine stud on the bottom of the turbine hub by 1/3 turn, until the turbine spins freely.

PROCEDURE TO TEST THE FLOW METER CABLE:

Disconnect the Console Control Cable from the Flow Meter Cable. Hold the cable connector so that the key way is pointing in the 12 o'clock position. See FIG. 8.

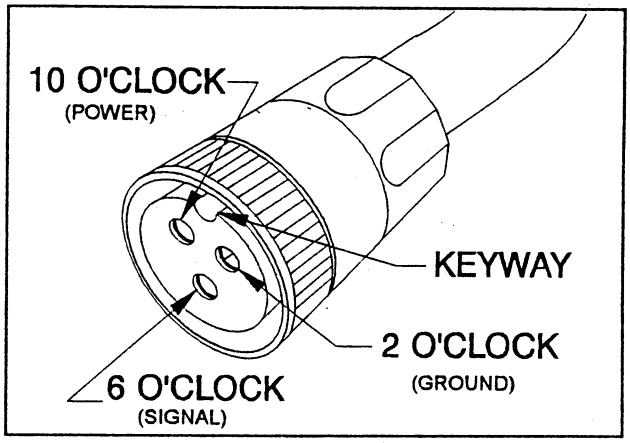

FIG. 8

VOLTAGE READINGS
2 o'clock to 6 o'clock (+5 VDC)
2 o'clock to 10 o'clock (+5 VDC)

1. Enter a METER CAL number of one (1) in key labeled: METER CAL 5

2. Depress key labeled: TOTAL VOLUME

3. Place MASTER and BOOM switches ON.

4. With small jumper wire (or paper clip), short between 2 o'clock and 6 o'clock sockets with a "short - no short" motion. Each time a contact is made, the TOTAL VOLUME total should increment up 1 or more counts.

5. If TOTAL VOLUME does not count up. Replace defective cable.

6. Perform above voltage checks.

7. If cables all test good, refer to test Flow Meter.

NOTE: After testing is complete, re-enter correct METER CAL number before spraying.

MAINTENANCE

PROCEDURE TO RE-CALIBRATE FLOW METER:

1. Enter a METER CAL number of 100 [378] in key labeled: 

2. Enter a TOTAL VOLUME of 0 in key labeled: 

3. Switch OFF Boom 2 and Boom 3.

4. Remove Boom 1 hose at boom connection and place the hose in a 5 gallon [19 liter] container.

5. Switch on Boom 1 and pump exactly two (2) containers (10 gallons) [38 liter].

6. The readout in TOTAL VOLUME (multiplied by 10) is your new METER CAL number. (Under normal circumstances, this number should be within +/- 3% of the number stamped on the tag on Flow Meter).

7. Repeat procedure several times to confirm accuracy. (Always "zero out" TOTAL VOLUME display before retesting).

NOTE: for greatest precision, set METER CAL to 100 [378] and pump 100 gallons [378 liters] of water.

8. Enter correct METER CAL number before resuming chemical spraying.

An alternate method of calibrating your Flow Meter is to fill your applicator tank with a pre-determined amount of liquid. Set your METER CAL to the number on the tag attached to the Flow Meter. Then go out and spray until the tank is empty. The number in the TOTAL VOLUME display should be the same as the amount you put in the tank. If not, increase or decrease the METER CAL by the percentage difference.

PROCEDURE TO TEST SPEED SENSOR TO CONSOLE CONNECTION:

Disconnect the Speed Sensor Switch Assembly Cable from the back of the Control Console. See diagram of Console receptacle in FIG. 9.

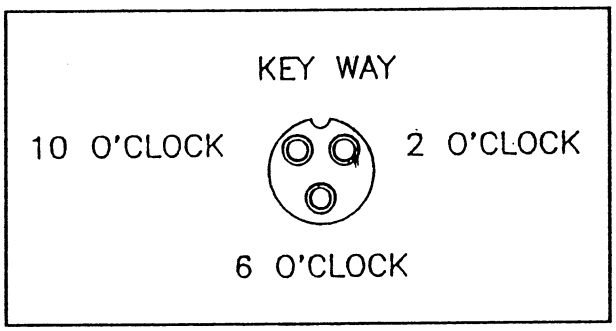

FIG. 9

VOLTAGE READINGS

10 o'clock to 6 o'clock (+5 VDC)
10 o'clock to 2 o'clock (+5 VDC)

1. Enter a SPEED CAL number of 1,000 in key labeled: 

2. Depress key labeled: 

3. With small jumper wire (or paper clip), short between 10 o'clock and 6 o'clock sockets with a "short - no short" motion. This should cause a speed reading to be displayed in the Console. If speed reading is displayed, Console power is confirmed. Therefore, replace Speed Sensor Switch Assembly.

4. If no speed reading is displayed, refer to "CONSOLE TROUBLESHOOTING", pages 17, 18 and 19.

NOTE: After testing is complete, re-enter correct SPEED CAL number before spraying.

MAINTENANCE
TROUBLESHOOTING GUIDE

NO.	PROBLEM	CORRECTIVE ACTION
1.	NO DISPLAY LIGHTS WITH POWER ON	1. Check fuse on back of Console. 2. Check battery connections 3. Check operation of POWER ON/OFF switch. 4. Return Console to Raven, Inc. to replace Processor Board Assembly.
2.	ALL KEYBOARD LIGHTS ON AT SAME TIME	1. Return Console to Raven, Inc. to replace Processor Board Assembly.
3.	A DIGIT CAN NOT BE ENTERED VIA KEYBOARD	1. Return Console to Raven, Inc. to replace Face Plate Sub-assembly.
4.	AN INDICATOR LIGHT ON A KEY WILL NOT ILLUMINATE	1. Return Console to Raven, Inc. to replace Face Place Sub-assembly and/or Processor Board Assembly.
5.	CONSOLE DISPLAYS FLASHING "CAL" WHENEVER VEHICLE ENGINE IS STARTED	1. Check battery voltage and battery connections. 2. Install stand-by 9-volt "alkaline" battery in battery box at rear of Console, (Duracell MN1604 or Eveready 522).
6.	CONSOLE DISPLAYS FLASHING "CAL" WHENEVER MASTER SWITCH IS TURNED ON OR OFF	1. Check battery voltage and battery connections.
7.	CONSOLE DISPLAYS FLASHING "CAL" WHENEVER SPEED IS CHANGED	1. Check battery voltage and battery connections. 2. Check for bad spark plug wires with engine analysis computer.
8.	"TIME" FUNCTION IS INACCURATE OR DRIFTING	1. Return Console to Raven, Inc. to replace Processor Board Assembly.
9.	ONE DISPLAY DIGIT HAS ONE OR MORE MISSING SEGMENTS	1. Return Console to Raven, Inc. to replace LCD Display Board Assembly.
10.	SPEED DISPLAY "0"	1. Check Speed Sensor switch cable connector and plug on back of Console for loose pins. 2. Clean pins and sockets on Speed Sensor cable connectors. 3. Replace Speed Sensor Switch Assembly.

MAINTENANCE
TROUBLESHOOTING GUIDE (Cont'd.)

NO.	PROBLEM	CORRECTIVE ACTION
11.	SPEED INACCURATE OR UNSTABLE	1. Run speed check on hard surface road. If SPEED is not accurate, verify the clearance gap between the Wheel Magnets and the Switch Assembly. The gap should be 1/4 to 1". Adjust switch bracketry if required. 2. Remove one red magnet and one black magnet from the wheel. (Reposition remaining red and black magnets directly across from each other). Enter a SPEED CAL number in the Console twice as large as the correct SPEED CAL number Run speed check on hard surface road. Remove these two magnets and replace with other two. Run speed check. If SPEED is inaccurate with only one set of magnets, replace the bad set. If SPEED is inaccurate with both sets, replace Speed Sensor Switch Assembly. NOTE: Re-enter original SPEED CAL number after testing is complete
12.	RATE READS "0000"	1. Verify Speed is registering accurately. If SPEED is zero, refer to Troubleshooting Problem 11. 2. Verify TOTAL VOLUME is registering flow. If not, refer to Troubleshooting Problem 16.
13.	RATE INACCURATE OR UNSTABLE	1. Verify that all numbers "keyed in" Console are correct. Verify SPEED is registering accurately. If SPEED is inaccurate, refer to Troubleshooting Problem 11. 2. In MAN (Manual) operation, verify that RATE display (GPA) holds constant when SPEED is held constant. If not, refer to Troubleshooting Problem 17. 3. In MAN (manual) operation, check low end and high end pressure range. If pressure can not be adjusted manually, refer to Troubleshooting Problem 14. 4. If problem persists, return Console to Raven, Inc. to replace Processor Board Assembly.

MAINTENANCE
TROUBLESHOOTING GUIDE (Cont'd.)

NO.	PROBLEM	CORRECTIVE ACTION
14.	CAN NOT VARY RATE IN MANUAL OPERATION OR IN AUTO	1. Check cabling to motorized Control Valve for breaks. 2. Check connections in cabling for cleanliness. 3. Verify that there is voltage at the valve connector by placing MASTER switch ON; RATE 1 / RATE 2 / MAN switch to MAN; and Power switch to ON. Manually operate INCR/DECR switch to verify voltage. 4. Verify that valve is turning, if not, replace motorized Control Valve.
15.	SPRAYER PRESSURE IS CORRECT BUT RATE IS LOW	1. Verify that nozzle strainer screens or check valves are not plugged. 2. Verify that pressure at each boom is the same. 3. Verify all nozzles are of proper and same orifice size.
16.	TOTAL VOLUME DOES NOT REGISTER	1. Check Flow Meter cable for breaks and shorts. See Page 15 for test procedure. 2. Check internals of Flow Meter; clean and adjust. See Page 15. 3. Replace Flow Meter Transducer.
17.	TOTAL VOLUME REGISTERS FLOW INACCURATELY	1. Verify that arrow on Flow Meter is pointing in direction of flow. 2. See Page 15 and 16.
18.	MOTORIZED CONTROL VALVE ROTATES MORE THAN 1/4 TURN	1. Replace motorized Control Valve.
19.	WATER INSIDE COVER OF MOTORIZED CONTROL VALVE	1. Replace Isolation Flange Assy. and Coupler Shaft. See Page 22. 2. Replace entire motorized Control Valve, if PC Board or Motor is corroded and will not turn.
20.	BOOM SOLENOID(S) WILL NOT OPERATE	1. Check cable for wires with breaks. 2. Check connectors for cleanliness. 3. Check BOOM switch and MASTER switch for operation. 4. Service Boom Solenoid Valve. See Pages 23 and 24.

RAVEN INDUSTRIES
205 E. SIXTH ST.
SIOUX FALLS, SD 57117-1007
ATTN; SERVICE Department

MAINTENANCE

CENTRIFUGAL PUMP SEAL PROBLEM TROUBLESHOOTING

Trouble	Probable Cause	Remedy
1. Cracked or broken stationary seat (Ceramic)	Seal ran dry and heated up. When liquid reached seal faces it was cooler, causing thermal cracks.	Check to insure seal chamber is full of liquid before starting pump. On high temperature application insure proper flushing at seal faces.
2. Carbon washer scored grooved.	Dirty System.	Have system cleaned and flushed.
3. Carbon washer worn unevenly.	Seal improperly installed.	Check installation instructions for proper assembly.
4. Rubber bellows of seal are hard and brittle Rapid carbon wear.	Did pump run dry or cavitate.	Check to insure seal chamber is full of liquid before starting pump.
5. Retainer drive tabs badly worn or broken.	Periodic loss of lubrication at seal faces.	Insure proper flushing at seal faces.
6. Flexible bellows broken.	Seal improperly installed.	Check installation instructions for proper assembly.
7. Seal wears out shaft.	Check bearings for shaft end play. Check bearings for shaft radial movement. Check shaft straightness.	Replace bearings. Replace shaft.

MAINTENANCE

Always flush pump with water, or neutralizing agent before servicing.

Refer to the illustrated Parts List for part ordering information.

Pump Housing Disassembly
In most cases, seal replacement requires disassembly of only the pump half of the unit.

1. Remove the four casing cap screws with 9/16" box end wrench. Tap pump casing on discharge port with rubber hammer, if necessary, to break loose from mounting flange. Check inside of pump casing including suction port. If badly eroded (or damaged), pump casing should be replaced. Remove O-ring and discard. O-ring should always be replaced.

2. To remove the impeller nut, clamp the flange in a vise and insert a large screwdriver or file (at least 10" long) into impeller vanes to prevent impeller from turning when loosening nut. Use a 5/8" box end or socket wrench to remove the impeller nut by turning it counter-clockwise. See FIG. 10.

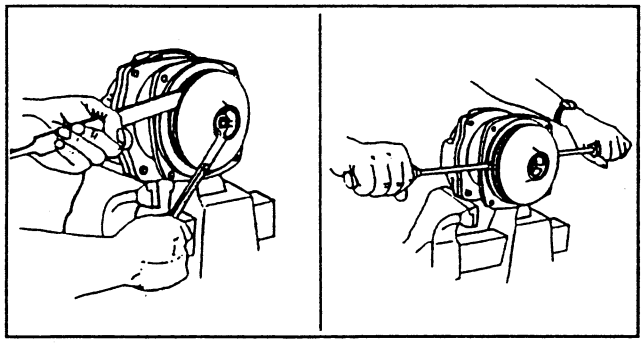

FIG. 10

3. Once nut is removed, place a screwdriver on each side (FIG. 10) behind the impeller and pry away from the mounting flange. Remove woodruff key from the shaft. Remove O-ring from the mounting flange.

Pump Seal Removal

1. Lightly lubricate shaft for easier removal of seal. Using two screwdrivers positioned opposite each other, pry the rotary portion of the seal from the shaft. See FIG. 11.

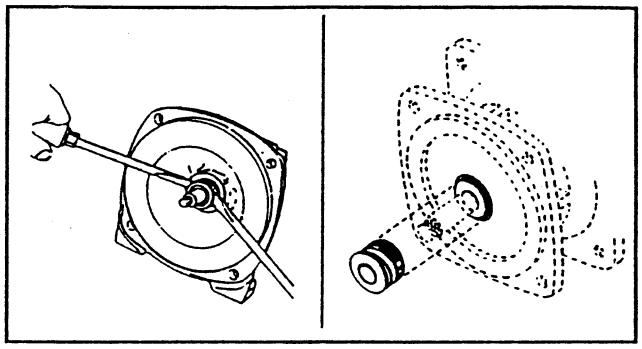

FIG. 11

2. Remove stationary seat and boot by prying out with two small screwdrivers in manner similar to impeller removal. (Caution: The seal will be damaged by removal in this manner. A new seal and rubber gasket MUST be used when pump is reassembled.)

Clean-Up of Pump Housing

1. Using a circular bottle-type wire brush with air or hand drill, clean the discharge port, suction port and the sealing areas of the O-ring on the pump casing and mounting flange.

2. After wire brush cleaning, it is recommended that the pump casing and mounting flange be further cleaned in a solvent tank to remove rust and corrosion particles.

Seal Replacement/Pump Housing Reassembly

NOTE: Reassemble if drive end is not to be repaired.

Be extremely careful with the new seal. Take special care not to scratch the lapped sealing faces of the rotary washer and stationary seat.

1. Lubricate seal cavity in mounting flange with WD-40, LPS or equivalent.

2. Install the stationary portion of the mechanical seal by sliding over the shaft with the ceramic side out.

IMPORTANT: Make sure both seal cavity and seal are clean and lubricated. Never run the sealing faces dry.

3. To seat the seal in the seal cavity, use a piece of 3/4" PVC pipe 4" to 6" in length. Press it in firmly and squarely. Lubricate sealing surface on seal after it is seated.

4. To install the rotary portion of the mechanical seal, place it over the shaft with the carbon side facing in, and press until it bottoms out against the stationary portion. See FIG. 11.

5. Insert key into shaft key slot. Place impeller on shaft. Put impeller nut on shaft end using a large screwdriver or file in the impeller vanes for support, tighten impeller nut securely.

6. Install O-ring on mounting flange. Replace O-ring if worn or damaged.

7. Place pump casing on mounting flange, insert and tighten bolts evenly.

MOTORIZED CONTROL VALVE

Replace the valve body with the iso-body kit (10) if the valve has been leaking internally.

Replace the motor assembly if the motor will not run or if the printed circuit board is corroded.

Before reassembling valve, remove the coupler shaft from the valve body. Apply Loctite to the coupler shaft (5) and the woodruff key (4). Place the coupler shaft and the woodruff key onto the motor shaft. Plug motor into the valve connector coming from the Sprayer Control Console. Check that the motor rotates in both directions. Motor must stop when the coupler shaft cam releases the printed circuit board switch button.

When reassembling the valve, grease both sealing surfaces of the coupler shaft. Insert the coupler shaft into the iso-flange (9) and be sure seal properly seats on the shaft. Install on valve body and apply RTV 738 or equivalent to the mounting holes. Reassemble remaining items as shown in the parts diagram, FIG. 12.

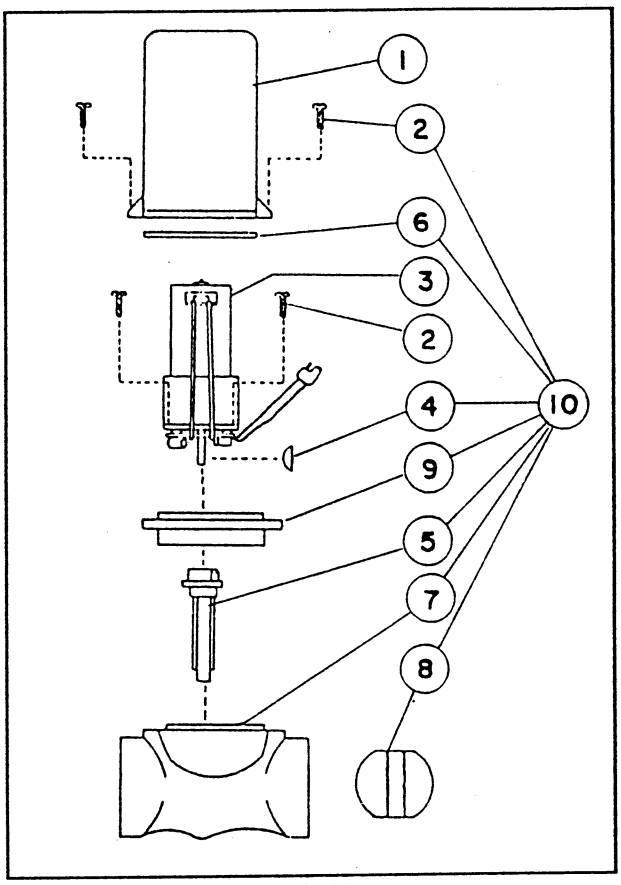

FIG. 12

1.	Valve Cover	6.	Seal
2.	Screw	7.	Valve Body
3.	Motor Assembly	8.	Butterfly
4.	Woodruff Key	9.	Isolation Flange
5.	Coupler Shaft	10.	ISO-Body Kit

MAINTENANCE
TROUBLESHOOTING THE 92-0356 SOLENOID VALVE

CONDITION	POSSIBLE CAUSES	HOW TO CHECK
1. Valve won't open	**A.** No electrical power to valve	Manually activate valve. If stem moves freely, check and clean electrical connections. Inspect electrical system.
	B. Stroke too long	Energize coil. Check length of stroke - should be approximately 1/8". If not, reset stroke.
	C. Stem movement restricted	Manually activate stem by pushing on lower diaphragm piston. If more than 5 lbs. of force is required to move stem, disassemble valve, inspect and clean all parts.
2. Valve won't shut off	**A.** Spring malfunction	Manually activate stem. Stem should offer 2-6 lbs. resistance, but movement should be quick and smooth. If there is very little resistance, disassemble and check spring.
	B. Stem movement restricted	Manually activate stem by pushing on lower diaphragm piston. If more than 5 lbs. of force is required to move stem, disassemble valve, inspect and clean all parts. Replace any damaged or worn parts with new ones.
	C. Seat washer blown out of retainer due to excessive pressure	Remove stem from valve body and inspect condition of seat washer.
	D. Seat washer worn or damaged	Replace seat washer.
3. Leakage around coil or around lower diaphragm piston.	**A.** Ruptured diaphragms	Disassemble valve and replace diaphragms with new ones.
4. Blowing fuses	**A.** Short circuit in power	Inspect wires for worn insulation and check connections.
	B. Short within the coil	Remove connections from coil and activate switch, making sure connections don't touch. If fuse doesn't blow, replace coil.
5. Valve operating properly, but pressure drop too high.	**A.** Not getting full stroke	Energize coil. Check length of stroke - should be approximately 1/8". If not, remove coil and check for obstructions between armature and armature stop. If clean, reset stroke.
	B. Obstruction in valve body	Remove inlet and outlet connections and inspect body.

MAINTENANCE

SOLENOID VALVE:

IMPORTANT: Before performing any maintenance, make sure electrical power to the coil is shut off and line pressure is relieved.

- Keep all electrical connections, coil and metal strap clean at all times.
- A protective coating may be applied to the completed electrical connections if desired.
- Do not apply lubricating oils or other petroleum products to the valves, as this may cause swelling of the rubber parts. Also, check with the chemical manufacturer to be sure chemicals being used are compatible with the valve components.

See parts drawing below for reference numbers in parentheses( ).

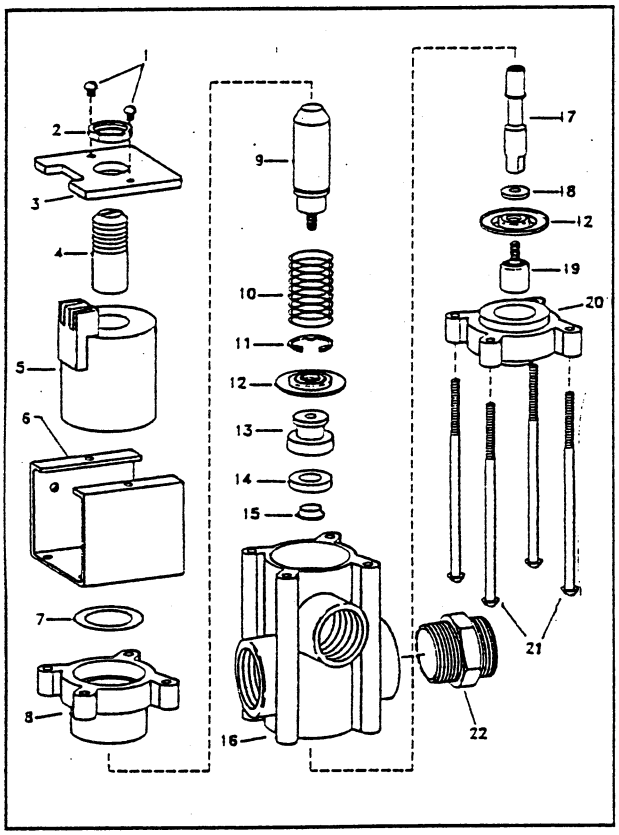

TO REPLACE COIL ONLY

1. Shut off power to coil.

2. Disconnect wires from terminals.

3. Remove two screws (1) from top of coil cover(3).

4. Lift off coil(5) and replace with new coil.

5. Replace coil cover (3) and attach securely with the two screws(1).

TO REPLACE DIAPHRAGMS AND SEAT WASHER

1. Remove the four screws (21) that secure the lower diaphragm housing and separate coil sub-assembly and washer (7). Remove the lower (20) diaphragm housing.

2. Remove spring (10) from armature (9).

3. Secure hole in armature (9) with 1/4" diameter rod or an allen wrench. Unscrew entire assembly with screwdriver secured in slot of lower diaphragm piston (19).

NOTE: Stem/Seat/Diaphragm/upper diaphragm housing assembly may unscrew at lower diaphragm piston (19) or at armature (9).

4. If lower diaphragm piston (19) unscrews, remove diaphragm (12) and washer (18) and inspect or replace as necessary. Remaining seat/upper assembly may be removed from top of polypropylene body (16) and disassembled by securing flats on stem (17) and unscrewing armature (9). Seat washer retainer (13) will then slide from the stem (17). Separate the upper diaphragm housing (8) and upper diaphragm from the seat washer retainer (13).

5. If armature (9) unscrews, remove the upper diaphragm housing (8) and the diaphragm (12). The seat washer retainer (13) slides off the stem (17) which allows the spacer (15) and seat washer (14) to be removed. The lower diaphragm piston (19) can be disassembled from the stem (17) by securing the stem with a wrench and unscrewing the lower diaphragm piston (19).

TO REASSEMBLE:

1. Reassemble seat washer retainer (13), seat washer (14) and spacer (15) onto stem (17).

2. Reassemble upper diaphragm (12) [with "Fluid Side" marking facing valve body], the upper diaphragm housing (8) and armature (9) onto stem end (17) and tighten securely against the seat washer retainer (13).

3. Insert the entire subassembly into valve body (16) from top. Screw lower diaphragm piston (19) with diaphragm (12) and washer (18) in proper order into bottom end of stem assembly. Tighten snugly with screwdriver.

4. Reinstall spring (10) and washer (7) over armature (9). Place coil assembly (5) on top of upper diaphragm housing (8).

MAINTENANCE

SOLENOID VALVE (Cont'd)

5. Position valve body subassembly and coil subassembly together. Mounting position is not important; the relationship of the inlets and outlets may be placed at any position relative to the electrical connections on the coil assembly.

6. Replace lower diaphragm housing (2). Secure coil subassembly, body subassembly and lower diaphragm housing using four screws (21). Care must be exercised to uniformly tighten the retaining screws (21).

7. Replace electrical connections. There is no positive or negative terminal.

IF STROKE ADJUSTMENT IS NEEDED:

1. Make adjustment in the fully assembled state. Seat washer (14) must be in good condition.
2. Unscrew jam nut (2).
3. Turn armature stop (4) clockwise until it just makes slight contact with the armature (9).
4. From this point back the armature stop (4) out two full turns and lock with jam nut (2).
5. Stroke will be approximately 1/8" (3 mm) and can be checked by measuring the travel of the lower piston (19) when the coil is energized.

STORAGE

FLUSH PUMP AFTER USE

One of the most common causes for faulty pump performance is "gumming" or corrosion inside the pump. Flush the pump and entire system with a solution that will chemically neutralize the liquid pumped. Mix according to manufacturer's directions. This will dissolve most residue remaining in the pump, leaving the inside of the pump clean for the next use.

TO PREVENT CORROSION

After cleaning the pump as directed above, flush it with a permanent type automobile antifreeze (Prestone, Zerex, etc.) containing a rust inhibitor. Use a 50% solution - that is, half antifreeze and half water, or fill pump with FLUID FILM and then drain it. A protective coating of FLUID FILM will remain on the inner pump surfaces. Save the excess FLUID FILM for the next application. Plug the ports to keep out air during storage. For short periods of idleness, non-corrosive liquids may be left in the pump, BUT AIR MUST BE KEPT OUT. Plug ports or seal port connections.

IMPORTANT: FREEZING TEMPERATURES MAY DAMAGE THE PUMP, FLOWMETER, THE MOTORIZED CONTROL VALVE, AND THE ELECTRIC SOLENOIDS IF THE WATER IS NOT DRAINED COMPLETELY!

Remove and clean the Flow Meter at the end of each spraying season. See page 15. Clean Flow Meter turbine and inlet hub. Clean off all metal filings and wettable powders which have hardened on the plastic and metal parts. Check the inlet hub and turbine assembly for worn or damaged turbine blades and bearings. Flush Flow Meter with clear water and drain.

IMPORTANT! When a high pressure washer or garden hose is used for cleaning, it is necessary to cover or otherwise protect the control Console. Water entering the Control Console will cause serious damage, to the electronic system.

Remove the Control Console from the Vehicle for storage, or otherwise protect it from the elements.

Should the Control Console require service, refer to the serial number decal on the bottom of the console when requesting assistance or information from your TORO distributor.

SERVICING AFTER STORAGE:

Flush the entire spraying system with clean water and detergent.

Flush the entire spraying system again with clean, clear water to rinse.

Drain entire spraying system.

STORAGE AND DISPOSAL OF CHEMICALS:

Follow chemical manufacturer's recommendations for storage and disposal of chemicals.

NOTES

CONTENTS

SAFETY ..... 1 & 2
DECALS 2
INTRODUCTION 3
CONTROLS 3
CONSOLE FEATURES 4
BEFORE SPRAYING ..... 5 & 6
- CONSOLE CALIBRATION
  - BOOM CAL 5
  - VALVE CAL 5
  - RATE1 AND RATE2 6
- NOZZLE SELECTION 7
- CONSOLE PROGRAMMING 8
  - DATA ENTRY 8
  - INITIAL CONSOLE PROGRAMMING ..... 8 & 9
  - OTHER DISPLAY FEATURES 9
  - SELF TEST FEATURE 9
  - DATA-LOCK ..... 9 & 10
  - POWER DOWN 10
  - CONSOLE ALARM 10
  - LOW LIMIT FLOW 10
  - CONTROL VALVE DELAY 10
  - INITIAL SYSTEM SET-UP 11
  - INITIAL SYSTEM FIELD TEST ..... 11 & 12
  - FILLING THE SOLUTION TANK 12
  - FILLING THE CLEAN WATER WASH TANK 12
- CALIBRATION RECORD 13
- OPERATION 13
  - USING THE SPRAYER 13
  - AFTER SPRAYING 13
- PREVENTATIVE MAINTENANCE 14
- MAINTENANCE 15
  - FLOW METER ..... 15 & 16
  - SPEED SENSOR 16
  - CONTROL CONSOLE TROUBLESHOOTING ..... 17 - 19
  - CENTRIFUGAL PUMP TROUBLESHOOTING ..... 20 & 21
  - SOLENOID TROUBLESHOOTING ..... 22 & 23
  - MOTORIZED CONTROL VALVE 24
- STORAGE 25

The Toro Promise
A One Year Limited Warranty

The Toro Company promises to repair your Pro-Control Spray System for the Multi-pro™ 1100 Vehicle (comprising of models (41120, 41128, 41020, 41021, 41130) if defective in materials or workmanship. The following time periods from the date of purchase apply (special warranty terms, on certain components, may be offered through The Toro Company by the component manufacturers):

Commercial Products.....1 Year

The cost of parts, labor and transportation are included.

If you feel your TORO Product is defective and wish to rely on The Toro Promise, the following procedure is recommended:

1. Contact your Authorized TORO Distributor or Commercial Dealer (the Yellow Pages of your telephone directory is a good reference source).
2. The TORO Distributor or Commercial Dealer will advise you on the arrangements that can be made to inspect and repair your product.
3. The TORO Distributor or Commercial Dealer will inspect the product and advise you whether the product is defective and, if so, make all repairs necessary to correct the defect without an extra charge to you.

If for any reason you are dissatisfied with the distributor's analysis of the defect or the service performed, you may contact us.

Write:

TORO Commercial Products Service Department
8111 Lyndale Avenue South
Bloomington, MN 55420-1196

The above remedy of product defects through repair by an Authorized TORO Distributor or Commercial Dealer is the purchaser's sole remedy for any defect.

THERE IS NO OTHER EXPRESS WARRANTY. ALL IMPLIED WARRANTIES OF MERCHANTABILITY AND FITNESS FOR USE ARE LIMITED TO THE DURATION OF THE EXPRESS WARRANTY.

Some states do not allow limitations on how long an implied warranty lasts, so the above limitation may not apply to you.

This Warranty applies only to parts or components which are defective and does not cover repairs necessary due to normal wear, misuse, accidents, or lack of proper maintenance. Regular, routine maintenance of the unit to keep it in proper operating condition is the responsibility of the owner.

All warranty repairs reimbursable under The Toro Promise must be performed by an Authorized Toro Commercial Dealer or Distributor using Toro approved replacement parts.

Repairs or attempted repairs by anyone other than an Authorized TORO Distributor or Commercial Dealer are not reimbursable under The TORO Promise. In addition, these unauthorized repair attempts may result in additional malfunctions, the correction of which is not covered by warranty.

THE TORO COMPANY IS NOT LIABLE FOR INDIRECT, INCIDENTAL OR CONSEQUENTIAL DAMAGES IN CONNECTION WITH THE USE OF THE PRODUCT INCLUDING ANY COST OR EXPENSE OF PROVIDING SUBSTITUTE EQUIPMENT OR SERVICE DURING PERIODS OF MALFUNCTION OR NON-USE.

Some states do not allow the exclusion of incidental or consequential damages, so the above exclusion may not apply to you.

This warranty gives you specific legal rights, and you may also have other rights which vary from state to state.

COUNTRIES OTHER THAN THE UNITED STATES OR CANADA

Customers who have purchased TORO products exported from the United States or Canada should contact their TORO Distributor (Dealer) to obtain guarantee policies for your country, province, or state. If for any reason you are dissatisfied with your Distributor's service or have difficulty obtaining guarantee information, contact the TORO importer. If all other remedies fail, you may contact us at The Toro Company.

Compliance with Radio Interference Regulations Certified.