FORM NO. 94-8516

TORO®

MODEL NO. 41083	OPERATOR'S MANUAL

PRO CONTROL™ SPRAY SYSTEM
for the Multi-Pro® 5500 Turf Sprayer

To assure maximum safety, optimum performance, and to gain knowledge of the product, it is essential that you or any other operator of this equipment read and understand the contents of this manual before the vehicle engine is ever started. Pay particular attention to the SAFETY INSTRUCTIONS highlighted by this symbol.

The safety alert symbol means CAUTION, WARNING or DANGER—personal safety instruction. Failure to comply with the instruction may result in personal injury.

SAFETY INSTRUCTIONS

Keep this Operator's Manual in the plastic tube behind the operator seat.

It is very important that all persons operating this equipment have easy access to these instructions at all times.

Carefully read and follow the "Set-Up" Instructions that are provided with this equipment and the Safety Instructions in the Multi-Pro™ Operator's Manual.

RECOGNIZE SAFETY INFORMATION

This safety-alert symbol is used to call attention to a **dangerous** situation, which could result in serious injury or death to the operator or a bystander.

Safety, mechanical and some general information in this manual are emphasized. **DANGER**, **WARNING** and **CAUTION** identify safety messages. Whenever the triangular safety symbol appears, it is followed by a safety message that must be read and understood. For more details concerning safety, read the Safety Instructions on this page and page 2. **IMPORTANT** identifies special mechanical information and **NOTE** identifies general information worthy of special attention.

These instructions are provided as a guide for the safe operation and maintenance of this equipment. However, the operator's personal safety, as well as those persons in the work area, will depend on the careful actions and good judgement of the operator. **To reduce the potential for injury or death, comply with the following safety instructions.**

BEFORE OPERATING

1. Operate this machine only after reading and understanding the contents of this manual. A replacement manual is available by sending complete model and serial number to: Hahn Equipment Co., a subsidiary of The Toro Company, 1625 N. Garvin, Evansville, IN 47711.

2. Lean how to operate the Sprayer and how to use the controls properly. **DO NOT** let anyone operate this equipment without first receiving thorough instructions.

3. Keep all shields, safety devices and decals in place. If a shield, safety device or decal is malfunctioning, illegible or damaged, repair or replace it before operating the machine.

4. Chemicals can injure persons, animals, plants, soils or other property. To eliminate environmental damage and personal injury:

A. Select the proper chemical for the job.

B. Follow manufacturer's instructions on chemical container labels. Apply and handle chemicals as recommended.

C. Handle and apply chemicals with care. Wear goggles and other necessary protective equipment. Handle chemicals in well ventilated areas. Never smoke while handling chemicals.

D. Properly dispose of chemical container and unused chemicals.

©The TORO Company - 1998
All Rights Reserved

SAFETY INSTRUCTIONS

WHILE OPERATING

5. Make certain everyone is clear of the machine before starting the engine to move the vehicle or before engaging the Sprayer Pump.

6. If equipment begins to vibrate abnormally, stop immediately. Shut off the vehicle engine and disengage all power. Repair all damage before commencing operation.

MAINTENANCE

7. Before servicing or making any adjustments to the Sprayer:

A. Stop the Vehicle and set the parking brake.

B. Shut off the Vehicle's engine and remove key from ignition.

C. Disengage all power and wait until all moving parts have stopped.

8. Keep all nuts, bolts and other fasteners tightened securely. Replace any shields removed during servicing or adjustments.

9. To be sure of optimum performance and safety, always purchase genuine TORO replacement parts and accessories. Replacement parts and accessories made by other manufacturer's could be dangerous. Altering this equipment in any manner may affect the machine's operation, performance, durability or its use may result in injury or death. Such use coud void the product warranty of the TORO Company.

INTRODUCTION

The Toro Pro-Control™ Spray System is designed to improve the accuracy and uniformity of spray applications. Its performance relies on the installation and preventive maintenance of the complete Sprayer. This Manual provides a simple step-by-step procedure for operating the Toro Pro-Control™ Spray System.

The Toro Pro-Control™ System consists of a computer based Control Console, a Speed Sensor, and a Turbine Type Flow Meter. Appropriate cabling is furnished with Vehicle for installation. The operator sets the target volume per area to be sprayed and the Control Console automatically maintains the flow regardless of vehicle speed. A manual override switch allows the operator to manually control flow for system check out and spot spraying. Actual volume per area being applied is displayed at all times. The Pro-Control™ Spray System additionally functions as an area monitor, speed monitor and volume totalizer.

CONSOLE FEATURES

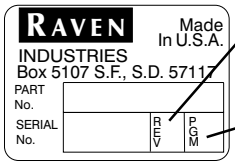

Console REV. (Revision) can be determined by letter stamped in REV. box on label.

Console PGM (Program) can be determined by letter stamped in PGM box on label.

IMPORTANT: This Console requires selection of area measureent n **US** (acres); **SI** (hectares) or **TU** (2,000 sq. ft.) and type of speed sensor **SP1** (wheel drive, etc.), **SP2** (radar), or **SP3** speed sensor. **(The Toro® Pro-Control™ for the Multi-Pro™ 5500 uses the SP3 wheel drive sensor.)** Refer to **Initial Console Programming** on page 8.

POWER - Turns Console power OFF or ON. Turning Console OFF does not affet data sotred in the computer

Selects manual or fully automatic control. Can automatically control two rates.

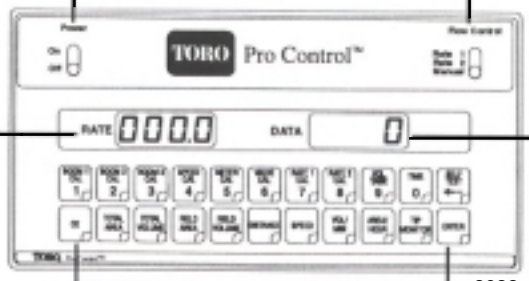

2033

Displays operating rate of application.

Displays functon and calibration data.

CE - Used like a CE key on a calculator. This key is also used to select an area base measurement of US (acres), SI (hectares), or TU (1,000 sq. ft.).

ENTER - Used only to enter data into the console.

CALIBRATION KEYS - Used to enter data into the Console to calbrate the system.

BOOM1 CAL	Length of Boom 1
BOOM2 CAL	Length of Boom 2
BOOM 3 CAL	Length of Boom 3
SPEED CAL	Determined by Rolling Radius
METER CAL	Flow Meter Calibration Number
VALVE CAL	Control Valve Response Time
RATE 1 CAL	Target Application Rate
RATE 2 CAL	Target Application Rate
SELF TEST	Simulates Vehicle Speed

FUNCTION KEYS - Used to display data.

TOTAL AREA	Total Area Sprayed
TOTAL VOLUME	Total Volume Sprayed
FIELD AREA	Field Area Sprayed
FIELD VOLUME	Volume Applied to Field
DISTANCE	Distance Traveled
SPEED	Speed of Vehicle
VOLUME/MIN	Volume Sprayed per Minute at Speed Being Traveled
VOLUME/TANK	Volume Remaining in Tank
AREA/HOUR	Area Sprayed per Hour at Speed being Traveled
TIME	24-hour clock(Military Time)

CONSOLE FEATURES

CALCULATING "BOOM CAL" (Boom 1, Boom 2, Boom 3):

BOOM CAL is calculated by multiplying the number of spray tips times the tip spacing. For the Toro Pro-Control™, having nozzles at 20" spacing, the Console should be programmed as follows:

BOOM1 CAL 1 **(left) - 80**

BOOM2 CAL 2 **(center) - 60**

BOOM3 CAL 3 **(right) - 80**

CALCULATING "SPEED CAL"

NOTE: This SPEED CAL number is critical to the performance of the Toro Pro Control™ Spray System. Be sure tires are properly inflated and Tank is half full before executing the following procedure.

1. Enter a SPEED CAL number of **"148"** into the key labeled: SPEED

2. On a flat ground surface (with Tank half full), mark off a distance of 500 feet. Verify that the distance readout reads "0". To set the Distance readout to "0", depress DISTANCE, ENTER, then depress TIME 0 and ENTER. Drive vehicle straight ahead the marked distance of 500 feet.

3. Verify that the distance readout on the Computer Console reads "500". This distance should be correct plus or minus 2% (in 500 feet, this distance should be between 490 and 510 feet).

4. If the distance readout does not read "500" (plus or minus 2%) re-calibrate SPEED CAL using the following equation:

New SPEED CAL # =

$$148 \times \frac{500}{\text{Distance Readout}}$$

For example, if the vehicle travels 500 feet and the Console reads 484 feet, correct as follows:

New SPEED CAL # =

$$148 \times \frac{500}{484} = 173$$

Enter new SPEED CAL number of "173" into the Console.

CALCULATING "METER CAL" METER CAL 5

The Flow Meter calibration number is stamped on the white tag attached to each Flow Meter. This number is to be used for "gallons over acre" and "Gallons per 1000" applicatoins. To convert this number to desired units of measure (ozs, lbs, or liters per area), see the conversion formulas on page 5. Record this number in a safe place in case the tag is ever lost or disfigured.

CALCULATING "VALVE CAL": VALVE CAL 6

1. The initial Valve calibration number for VALVE CAL IS 111. This number is recommended for most spray applications. The VALVE CAL number is used to control response of the hydraulic Control Valve to the change in vehicle speed. After operating the system, you may desire to refine this number. See definitions below:

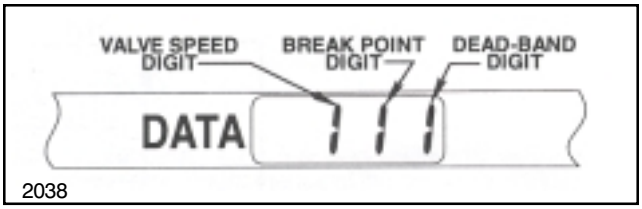

Valve Speed digit -
Controls response time of Control Valve motor. **CAUTION: Running the Control Valve too fast will cause the system to oscillate.**

Range: 1 to 9 1 - Slow, 9 - Fast

Brake Point Digit Percent -
Sets the point at which the Control Valve motor begins braking, so as not to over shoot the desired rate. Digit is percent away from target rate.

Range: 0 to 9 0 = 5%, 1 = 10% 9 = 90%

Dead=Band Digit -
Allowable difference betwen target and actual application rate, where rate correction is not performed.

Range: 1 to 9 1 = 1%, 0 = 9%

BEFORE SPRAYING

CONSOLE CALIBRATION (CONT'D):

CALCULATING "RATE 1" AND "RATE 2"

Refer to the Chemical Manufacturer's instructions on the chemical container label to determine the application rate of the chemical to be sprayed.

Enter the application rate (with decimal) in RATE 1 and RATE 2. Enter the rates in gallons per acre (US mode), gallons per 1000 sq. ft. (TU mode) or liters per hectare (SI mode) depending on the base measurement selected. **NOTE: RATE 2 should not differ more than 20% from RATE 1. If you do not use a second rate, enter the same rate in both RATE 1 and RATE 2.**

IMPORTANT: See the nozzle charts on page 6 and 7 to be sure that your spray nozzles have the capacity necessary to achieve the application rate selected.

CONSOLE PROGRAMMING:

SYMBOL DEFINITIONS AND CONVERSIONS:

SYMBOL DEFINITIONS:

GPM	- Gallons per minute
lit/min	- Liters per minute
dl/min	- Deciliter per minute
PSI	- Pounds per square inch
kPa	- Kilopascal
GPA	- Gallons per acre
lit/ha	- Liters per hectare
ml/ha	- Milliliter per hectare
GAL/1000 FT^2	- Gallons per 1,000 sq. ft.
mm	- Millimeters
cm	- Centimeters
dm	- Decimeters
m	- meter
MPH	- Miles per hour
km	- kilometers
km/h	- Kilometers per hour
US	- Volume per ACRE
SI	- Volume per HECTARE
TU	- Volume per 1,000 sq. ft.

LIQUID CONVERSIONS

U.S. Gallons x 128 = Fluid Ounces
U.S. Gallons x 3.785 = Liters
U.S. Gallons x 0.83267 = Imperial Gallons
U.S. Gallons x 8.34 = Pounds (Water)

AREA

1 Acre = 43,560 sq. feet
1 Square Meter = 10,764 sq. feet
1 Hectare (ha) = 2,471 acres; 10,000 sq. meters

LENGTH

1 Millimeter (mm) - 0.039 inch
1 Centimeter (cm) = 0.393 inch
1 Meter (m) = 3.281 feet
1 Kilometer (km) = 0.621 mile
1 Inch = 25.4 millimeters; 2.54 centimeters
1 mile = 1.609 kilometers

PRESSURE

1 PSI = 6.89 kPA

FORMULAS:

$$^{\#}\ \text{Speed (mph)} = \frac{\text{Distance (ft.)} \times 60}{\text{Time (seconds)} \times 88}$$

$$\text{GPM per nozzle} = \frac{\text{GPA} \times \text{mph} \times w^*}{5{,}940}$$

$$\text{GPM per nozzle} = \frac{\text{Gal/1000 ft} \times \text{mph} \times w^*}{136}$$

$$\text{GPA} = \frac{5{,}940 \times \text{GPM (per nozzle)}}{\text{mph} \times w^*}$$

$$\text{Gal/1000 ft.} = \frac{138 \times \text{GPM (per nozzle)}}{\text{mph} \times w^*}$$

*** w = Nozzle spacing in inches.**

 # Use this equation to determine or verify ground speed.

BEFORE SPRAYING

NOZZLE SELECTION GPA/GAL FT²

Refer the nozzle charts to be sure that your spray nozzles have the capacity necessary to achieve the application rate selected.

To select the proper nozzle, you need to know the following information:

1. Recommended chemical application rate in gallons per acre or gallons per 1000 sq. ft. or liters per hectare.

2. Average Vehicle speed in Miles per hour or kilometers per hour.

3. Nozzle spacing (20 inches or 50 centimeters).

With this information you can calculate the volume per minute per nozzle, using one of the three formulas listed. Use Gal/Min and pressure or Lit/Min and pressure to select the appropriate nozzle from the corresponding charts.

EXAMPLE (GPA FORMULA)
Application Rate = 75 Gallons/Acre
Vehicle Speed = 4 M.P.H.
Nozzle Spacing = 20 inches

$$\frac{75 \text{ G.P.A.} \times 4 \text{ M.P.H.} \times 20}{5940} = 1.00 \text{ G.P.M. (per nozzle)}$$

With 1.00 G.P.M. and a pressure of 40 P.S.I. you would select Nozzle No. 95-9188.

EXAMPLE (GAL.1000 FT² FORMULA):
Application Rate = 1.70 Gal./1000 sq. ft.
Vehicle Speed = 4 M.P.H.
Nozzle Spacing = 20 inches

$$\frac{1.70 \text{ GAL/1000 FT} \times 4 \text{ M.P.H.} \times 20}{137} = 1.00 \text{ G.P.M. (per nozzle)}$$

EXAMPLE (LIT/HA FORMU.A):
Application Rate = 907 lit/hectare
Vehicle Speed = 5 km/h
Nozzle Spacing = 50 cm

$$\frac{907 \text{ lit/ha} \times 5 \text{ km/h} \times 50}{60{,}000} = 3.78 \text{ lit/min. (per nozzle)}$$

With 3.78 LIT/HA and a pressure at 275 kPa you would select nozzle No. 95-9188.

Liters Per Hectare Application Rates

TORO Part No.	Nozzle Number Color Code	Pressure (kPa)	Capacity 1 Nozzle (L/min)	Liters per Hectare at 50 cm Spacings							
				4 km/h	5 km/h	6 km/h	7 km/h	8 km/h	9 km/h	10 km/h	11 km/h
95-9221	Yellow	150	0.53	159	127	106	91	80	71	64	58
		200	0.64	192	154	128	110	96	85	77	70
		275	0.76	228	182	152	130	114	101	91	83
		350	0.83	249	199	166	142	125	111	100	91
95-2223	Red	150	1.06	318	254	212	182	159	141	127	116
		200	1.32	396	317	264	226	198	176	158	144
		275	1.51	453	362	302	259	227	201	181	165
		350	1.70	510	408	340	291	255	227	204	185
95-2223	Brown	150	1.40	420	336	280	240	210	187	168	153
		200	1.60	483	386	322	276	240	215	193	176
		275	1.89	567	454	378	324	284	252	227	206
		350	2.13	639	511	426	365	320	284	256	232
95-2224	Grey	150	1.67	501	401	334	286	251	223	200	182
		200	1.93	579	463	386	331	290	257	232	211
		275	2.27	681	545	454	389	341	303	272	248
		350	2.56	768	614	512	439	384	341	307	279
95-2225	White	150	2.23	669	535	446	382	335	297	268	243
		200	2.58	774	619	516	442	387	344	310	281
		275	3.02	906	725	604	518	453	403	362	329
		350	3.41	1023	818	682	585	512	455	409	372
95-9188	Light Blue	150	2.79	837	670	558	478	419	372	335	304
		200	3.22	966	773	644	552	483	429	386	351
		275	3.78	1134	907	756	648	567	504	454	412
		350	4.28	1284	1027	856	734	642	571	514	467
95-9226	Light Green	150	4.18	1254	1003	836	717	627	557	502	456
		200	4.84	1452	1162	968	830	726	645	581	528
		275	5.67	1701	1361	1134	972	851	756	680	619
		350	6.40	1920	1536	1280	1097	960	853	768	698

Gallons Per Acre Application Rates

TORO Part No.	Nozzle Number Color Code	Pressure (PSIG)	Capacity 1 Nozzle (GPM)	Gallons per Acre at 20" Spacings							
				2.5 MPH	3 MPH	3.5 MPH	4 MPH	4.5 MPH	5 MPH	5.5 MPH	6 MPH
95-9221	Yellow	20	0.14	16.6	13.9	11.9	10.4	9.2	8.3	7.6	6.9
		30	0.17	20.2	16.8	14.4	12.6	11.2	10.1	9.2	8.4
		40	0.20	23.8	19.8	17.0	14.9	13.2	11.9	10.8	9.9
		50	0.22	26.1	21.8	18.7	16.3	14.5	13.1	11.9	10.9
95-2222	Red	20	0.28	33	28	24	21	18	17	15	14
		30	0.35	42	35	30	26	23	21	19	17
		40	0.40	48	40	34	30	26	24	22	20
		50	0.45	53	45	38	33	30	27	24	22
95-2223	Brown	20	0.35	42	35	30	26	23	21	19	17
		30	0.43	51	43	36	32	28	26	23	21
		40	0.50	59	50	42	37	33	30	27	25
		50	0.56	67	55	48	42	37	33	30	28
95-2224	Grey	20	0.42	50	42	36	31	28	25	23	21
		30	0.52	62	51	44	39	34	31	28	26
		40	0.60	71	59	51	45	40	36	32	30
		50	0.67	80	66	57	50	44	40	36	33
95-2225	White	20	0.57	68	56	48	42	38	34	31	28
		30	0.69	82	68	59	51	46	41	37	34
		40	0.80	95	79	68	59	53	48	43	40
		50	0.89	106	88	76	66	59	53	48	44
95-9188	Light Blue	20	0.71	84	70	60	53	47	42	38	35
		30	0.87	103	86	74	65	57	52	47	43
		40	1.00	119	99	85	74	66	59	54	50
		50	1.12	133	111	95	83	74	67	60	55
95-9226	Light Green	20	1.06	126	105	90	79	70	63	57	52
		30	1.30	154	129	110	97	86	77	70	64
		40	1.50	178	149	127	111	99	89	81	74
		50	1.68	200	166	143	125	111	100	91	83

Gallons Per 1000 Sq. Ft. Application Rates

TORO Part No.	Nozzle Number Color Code	Pressure (PSIG)	Capacity 1 Nozzle (GPM)	Gallons per 1000 Sq. Ft. Application Rates							
				2.5 MPH	3 MPH	3.5 MPH	4 MPH	4.5 MPH	5 MPH	5.5 MPH	6 MPH
95-9221	Yellow	20	0.14	0.38	0.32	0.27	0.24	0.21	0.19	0.17	0.16
		30	0.17	0.46	0.39	0.33	0.29	0.26	0.23	0.21	0.19
		40	0.20	0.54	0.45	0.39	0.34	0.30	0.27	0.25	0.23
		50	0.22	0.60	0.50	0.43	0.37	0.33	0.30	0.27	0.25
95-2222	Red	20	0.28	0.76	0.63	0.54	0.48	0.42	0.38	0.35	0.32
		30	0.35	0.95	0.79	0.68	0.60	0.53	0.48	0.43	0.40
		40	0.40	10.90	0.91	0.78	0.68	0.60	0.54	0.49	0.45
		50	0.45	1.22	1.02	0.87	0.77	0.68	0.61	0.56	0.51
95-2223	Brown	20	0.35	0.95	0.79	0.68	0.60	0.53	0.48	0.43	0.40
		30	0.43	1.17	0.97	0.84	0.73	0.62	0.58	0.53	0.49
		40	0.50	1.36	1.13	0.97	0.85	0.76	0.68	0.62	0.57
		50	0.56	1.52	1.27	1.09	0.95	0.85	0.76	0.69	0.63
95-2224	Grey	20	0.42	1.14	0.95	0.82	0.71	0.63	0.57	0.52	0.48
		30	0.52	1.41	1.18	1.01	0.88	0.79	0.71	0.64	0.59
		40	0.60	1.63	1.36	1.17	1.02	0.91	0.82	0.74	0.68
		50	0.67	1.82	1.52	1.30	1.14	1.01	0.91	0.83	0.76
95-2225	White	20	0.57	1.55	1.29	1.11	0.97	0.86	0.78	0.70	0.65
		30	0.69	1.88	1.56	1.34	1.17	1.04	0.94	0.85	0.78
		40	0.80	2.18	1.81	1.55	1.36	1.21	1.09	0.99	0.91
		50	0.89	2.42	2.02	1.73	1.51	1.34	1.21	1.10	1.01
95-9188	Light Blue	20	0.71	1.93	1.61	1.38	1.21	1.07	0.97	0.88	0.80
		30	0.87	2.37	1.97	1.69	1.48	1.31	1.18	1.08	0.99
		40	1.00	2.72	2.27	1.94	1.70	1.51	1.36	1.24	1.13
		50	1.12	3.05	2.54	2.18	1.90	1.69	1.52	1.38	1.27
95-9226	Light Green	20	1.06	2.88	2.40	2.06	1.80	1.60	1.44	1.31	1.20
		30	1.30	3.54	2.95	2.53	2.21	1.96	1.77	1.61	1.47
		40	1.50	4.08	3.40	2.91	2.55	2.27	2.04	1.85	1.70
		50	1.68	4.57	3.81	3.26	2.86	2.54	2.28	2.08	1.90

BEFORE SPRAYING

After all installation procedures have been completed and Console power is turned "ON", the Console will flash "CAL" in the RATE display. This means you must calibrate or program the Console before it can be operated.

NOTE: Turning the POWER ON/OFF switch to "OFF", or disconnecting Console cables does not affect the Console memory. All data is retained.

While the calibration figures show below are useful guidelines, calculations should be carried out for your particular machine and refined to accommodate carrying operating conditions and desired applications.

DATA ENTRY

When entering data into the consols, the entry sequence is always the same. (NOTE: DATA MUST BE ENTERED INTO THE FIRST EIGHT KEYS).

1. Depress the key in which you wish to enter data.

2. Depress the "ENTER" key. An "E" will illuminate in the data DISPLAY.

3. Depress the keys corresponding to the number you wish to enter (i.e. "1", "0", "2", "4"). The numbers will be displayed in the DATA display as they are entered.

4. Complete the entry by again depressing the "ENTER" key.

INITIAL CONSOLE PROGRAMMING:

If an entry selection error is made during steps 1,2,3, and 4, the Console can be reset by turning the Console off and, while depressing CE, turn Console back on (data displays US).

1. Display US (volume per acres), SI (volume per hectares), or TU (volume per 1000 sq. ft.).

a. Depressing momentarily CE steps the DATA display from US (acres) to SI.

b. Depressing momentarily CE steps the DATA display from SI (hectares) to TU.

c. Depressing momentarily CE steps the DATA display from TU (2,000 sq. ft.) to US.

2. Selecting US, SI or TU.

a. To select US, SI or TU, step CE until the desired code is displayed n DATA display.

b. Momentarily depress ENTER . The DATA display will now display SP1.

3. Display SP1, SP2, or SP3 **(Toro Multi Pro® 5500 Pro-Control ™ uses SP3)**.

a. Depressing momentarily CE steps the DATA display from SP1 (SPL) to SP3.

b. Depressing momentarily CE steps the DATA display from SP2 and SP3.

4. Selecting SP1, SP2, and SP3.

a. To select SP1, SP2, and SP3 step with CE until desired code is displayed in DATA display.

b. Momentarily depress ENTER the DATA display will now display 0.

5. Enter BOOM 1 CAL (80) in key labeled: BOOM1 CAL 1

6. Enter Boom 2 CAL (60) in key labeled: BOOM2 CAL 2

7. Enter BOOM 3 CAL (80) in key labeled: BOOM3 CAL 3

8. Enter SPEED CAL (167) in key labeled: SPEED CAL 4

9. Enter METER CAL calibration number in key labeled: METER CAL 5 (METER CAL Number is located on Flow Meter).

10. Enter VALVE CAL calbration number (111) in key labeled: VALVE CAL 6

11. Enter the Application Target Rate in gallons per acre, liters per hectare, gallons per 1000 sq. ft. if you want to spray in the key labeled: RATE1 CAL 7

12. Enter a second target application rate in gallons per acre, liters per hectare or gallons per 1000 sq. ft. if you want to spray in key labeled: RATE2 CAL 8 if desired.

BEFORE SPRAYING

NOTE: RATE 2 should not differ more than 20% from RATE 1, or else Spray Pattern may suffer. If you do not use a second rate, enter the same rate in both RATE1 and RATE 2.

YOU HAVE NOW COMPLETED PROGRAMMING THE CONSOLE. The flashing "CAL" will now estinguish. If not, repeat procedure starting at step 5.

INITIAL CONSOLE PROGRAMMING (Cont'd): You may also want to enter data in the keys labeled: [VOL TANK] and [TIME 0] although it is not required for operation of the system.

13. **Key 9** "VOLUME TANK" (Optional) - Enter the amount of material in the Tank. This number must be re-entered each time the Tank is refilled. The function monitors Tank volume while spraying, based on the total amount applied.

14. **Key 0** "TIME" (Optional) - Enter time of day based on 24 hours (i.e. 1:30 p.m. is 13:30), or enter "0" to measure elapsed time.

OTHER DISPLAY FEATURES:

1. To display TOTAL AREA covered, momentarily depress keylabeled: [TOTAL AREA]

To "zero out" this total at any time, enter a "0" in this key.

2. To display TOTAL VOLUME sprayed, momentarily depress key labeled: [TOTAL VOLUME]

To "zero out" this total at any time, enter a "0" in this key.

3. To display FIELD AREA covered, momemtarily depress key labeled: [FIELD AREA]

To "zero out" this total at any time, enter a ')' in this key.

4. To display FIELD VOLUME sprayed, momentarily depress key labeled: [FIELD VOLUME]

To "zero out" this total at any time, enter a "0" in this key.

5. To display DISTANCE (feet [m] traveled), momentarily depress key labeled: [DISTANCE]

To "zero out" this total at any time, enter a "0" in this key.

6. To display MPH (km/h), momentarily depress key labeled: [AREA/ HOUR]

7. To display VOL/MIN (volume per minute) being sprayed at speed being traveled, momentarily depress key labeled: [VOL/ MIN]

8. To display AREA/HOUR (area per hour) momentarily depress the key labeled: [AREA/ HOUR]

This is an actual calibration of the area per hour at the present speed you are traveling. It is not an average over time.

9. To display US, TI or TU and SP1, SP2 or SP3 selections, depress and hold [SELF TEST] . These selections will be alternately displayed.

10. The TIP Monitor button is not used on the Toro Pro-Control ™ Spray System.

SELF TEST FEATURE

SELF TEST allows speed simulation for testing the system while the vehicle is not moving. Enter the simulated operating speed in the key labeled: [SELF TEST]

If 4 MPH (6.4 km/h) is desired, enter 4.0 (6.4).

Verify speed by depressing key labeled: [SPEED]

4.0 (6.4) will appear in the DATA display.

The SELF TEST speed will clear itself when motion of vehicle is detected by the Speed Sensor. A SPEED CAL value of 900 (230) or greater is recommended when operating in this mode.

THE FEATURES LISTED BELOW ARE NOT NECESSARY TO THE OPERATION OF THE PRO-CONTROL™ SYSTEM, BUT ARE INCLUDED AND CAN BE ACCESSED AT THE OPERATOR'S OPTION.

SEQUENCE TO ACTIVATE DATA-LOCK (This is an optional feature which prohibits the entry of data without first entering the DATA LOCK CODE).

1. Depress [CE] for 5 seconds, NEW CODE will appear.

2. Enter 4 digit code within 15 seconds.

EXAMPLE: For 1058 depress:

[BOOM1 CAL 1] [TIME 0] [METER CAL 5] [RATE2 CAL 8] and [ENTER] .

BEFORE SPRAYING

SEQUENCE TO CHANGE DATA-LOCK

1. Depress [CE] for 5 seconds, OLD CODE message will appear.

2. Enter 4 digit code within 15 seconds.

NEW CODE message will appear. Enter 4 digit code within 15 seconds.

EXAMPLE: FOR 1258 DEPRESS

[BOOM1 CAL 1] [BOOM2 CAL 2] [METER CAL 5] [RATE2 CAL 8] and [ENTER] .

ENTER MODE SEQUENCE WITH ACTIVATED DATA-LOCK

1. Depress the key into which you wish to enter data.

2. Depress [ENTER] CODE message will appear. Enter your DATA LOCK Code. If code is correct, "E" will appear. Now enter data normally.

The DATA LOCK CODE may be cleared by entering a code of "0" or by removing Console power.

POWER DOWN DELAY FEATURE (Optional):

To conserve the Vehicle's 12-volt batter, the Power Down delay should be set. In this "power down" mode, all data will be retained, but the time of day clock will not operate. The Power Down Delay is initially set at 10 days.

TO CHANGE DELAY TIME(Optional):

1. Depress "TIME" for 5 seconds and the current delay time will appear.

2. Reset the delay time by pressing "ENTER", the desired delay time (Normally 1-2 days) and "ENTER".

CONSOLE ALARM FEATURE (Optional):

Console alarm sounds if application rate is 30% or more away from target application rate for 5 seconds.

1. Displaying A on or A off.

a. Depressing [BOOM1 CAL 1] for 5 seconds Displays A on (alarm on) or A off (alarm off).

2. Selecting A on or A off.

a. To select A on or A off, step with [CE] until desired code is displayed in Data display.

b. Depressing any other key will lock that selection.

DISPLAY MENU (Optional):

Depress [BOOM1 CAL 1] for 7 seconds until DATA display shows "d on". Depressing [CE] key momentarily, stops the DATA display between "d on" and "d OFF". "d on" means RATE display target rate when actual rate is within a percentage of target rate. This percentage is determined by third digit of Valve CAL value as shown:

Brake point digit

(3rd digit) of Valve CAL 2 1 2 3

0 = 1% + Deadband	5 = 25% + Deadband
1 = 3% + Deadband	6 = 30% + Deadband
2 = 7% + Deadband	7 = 35% + Deadband
3 =10%+ Deadband	8 = 40% + Deadband
4 =20%+ Deadband	9 = 45% + Deadband

Actual rate is displayed if unit does not reach deadband within 10 seconds. "D OFF" means RATE displays actual rate at all times.

LOW LIMIT FLOW SET POINT AND LOW LIMIT ALARM (Optional)

Depress [VOL TANK] until DATA display flashes.

A low limit flow rate may be entered.

If actual Volume Per Minute falls below this limit, the Control Valve stops closing, the Alarm sounds and the rate display flashed "-LL-". The low Limit value should be determined with all Booms "ON". This value is automatically proportional to the percentage of Booms that are "on". (i.e. If the entered low limit is 4 GAL/MIN and half the Total Boom length is shut off, the Console automatically reduced the low limit to 2 GAL/MIN).

INITIAL SYSTEM SET= UP"

1. Attach Supply Hose to Anti-Siphon stand-up tube and fill the Tank one-half full with water and open the Suction Line Valve.

BEFORE SPRAYING

IMPORTANT: THE PUMP WILL BE DAMAGED IF IT IS ACTIVATED BEFORE IT IS COMPLETELY FILLED WITH LIQUID. BE CERTAIN THE SUCTION LINE VALVE IS OPEN AND LIQUID HAS REACHED THE PUMP.

IMPORTANT: INSPECT AND CLEAN ALL SYSTEM COMPONENTS BEFORE SPRAYING, INCLUDING THE TANK, STRAINER, PUMP, SOLENOIDS, AND NOZZLES IN YOUR INSPECTION.

2. Start the engine. Refer to "STARTING ENGINE" section on page 22 of the Multi-Pro™ 5500 Operator's Manual. Move the Throttle Lever to 7/8 to full throttle to simulate desired spraying speed.

3. Turn the Master ON/OFF switch to the "OFF" position, and Boom ON/OFF switches to "ON".

4. Turn MAN/RATE switch to "MAIN".

5. Place POWER ON/OFF to "ON".

6. Turn the Spray Pump Control Switch to the "ON" position.

7. Turn the Jet Agitator Switch to the "ON" position.

8. Verify that correct Boom widths and calibrations for Speed CAL, Meter CAL, Valve CAL, RATE 1 and RATE 2 have been entered in Console.

9. Switch "ON" the Master Boom Switch.

10.Using the Pressure Adjust Switch, set the Pressure Gauge to the desired pressure.

11. Turn MAN/RATE switch to "RATE 1".

12. Use the "SELF TEST" Feature as described on page 9 for speed simulation for testing the Spray System while the vehicle is not moving.

13. Turn Master ON/OFF switch to the OFF position.

14. Refer to Initial System Field Test.

INITIAL SYSTEM FIELD TEST:

1. Drive Vehicle at desired spraying speed with Sprayer Booms "OFF". Verify MPH readout on Console by depressing SPEED CAL.

2. Turn The Spray Pump Control switch to "ON".

3. Turn POWER, MASTER ON/OFF, and BOOM switches to "ON".

4. Place the MAN/RATE switch to RATE 1.

5. Increase or decrease vehicle speed by one MPH (2 Km/h). The system should automatically correct the target application rate.

If the system does not appear to be correcting properly, first review the "INITIAL SYSTEM SET-UP", then refer to the SERVICE MANUAL and TROUBLESHOOTING GUIDE".

6. At the end of each swath sprayed, switch the MASTER ON/OFF to 'OFF' to shut off flow. This also shuts off the acreage totalizer.

BEFORE SPRAYING

7. Verify area covered and volume used.

FILL THE FRESH WATER WASH TANK:

In case of chemical contact with skin or eyes, refer to the Chemical Manufacturer's label for instructions on seeking medical attention. A fresh water wash tank has been installed on the right side of the Vehicle.

NOTE: Fill Fresh Water Wash Tank with clean water only. Check to assure tank is full before each operation.

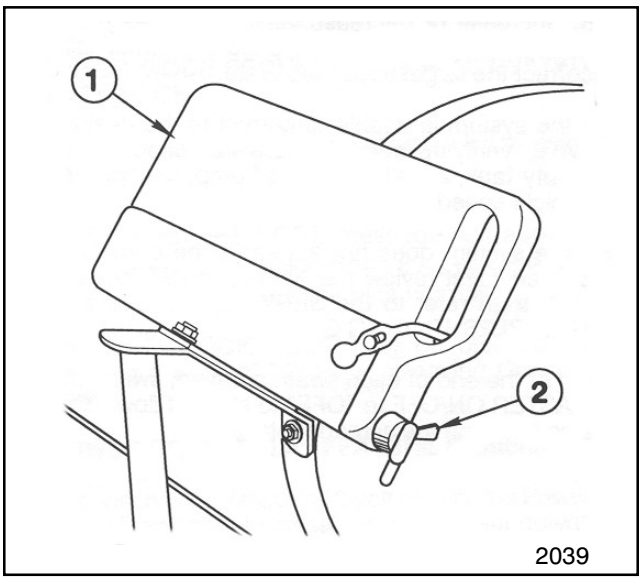

1. Turn Tank Spigot to on position. See FIG. 1.

FIG 1

1. Clean Water Wash Tank **2. Tank Spigot**

2. Hold contaminated area directly under water stream and flush thoroughly.

3. Turn Tank Spigot to "OFF" position.

FILLING THE SOLUTION TANK:

⚠ CAUTION

- **Chemicals can be hazardous! Read carefully the directions printed on the chemical manufactrurer's labels before handling chemicals. Instructons on chemical manufacturer's container labels, regarding mixing proportions, should be read and strictly followed. The concentrate should not be poured into an empty Tank: Fill Tank about one-half full with clean, clear water, add chemical concentrate and finish filling Tank with water.**
- **Keep spray material from skin. If spray material comes in contact with body, wash it off immediately with clean water and detergent.**
- **Always wear goggles and other protective equipment as recommended by the Chemical Manufacturer.**

IMPORTANT: FOLLOW THE CHEMICAL MANUFACTURER'S INSTRUCTIONS FOR MIXING SPRAY SOLUTION TO OBTAIN DESIRED APPLICATION RATE. DO NOT ADD CHEMICAL TO TANK UNTIL JUST BEFORE USE. THE CONCENTRATE SHOULD NOT BE POURED INTO AN EMPTY TANK; FILL TANK ABOUT ONE-HALF FULL WITH CLEAN, CLEAR WATER. WITH AGITATION ON, ADD CHEMICAL CONCENTRATE AND FINISH FILLING TANK WITH WATER.

1. Refer to "Operation Section".

OPERATION

USING THE SPRAYER:

1. Drive Vehicle to the area to be sprayed.

2. Position the throttle at 7/8 to full engine speed to provide the necessary ground speed, pressure and volume.

3. Turn Pump ON/OFF, switch to "ON", and begin forward motion. Switch Master ON/OFF switch to "ON", and use the Master ON/OFF, Remote Master, or Individual Boom Switches to control the Boom Sections while spraying.

IMPORTANT! PROPER APPLICATION OF TURF-GRASS CHEMICALS IS ESSENTIAL.

While operating the Sprayer:

- **Do not overlap areas that have been sprayed previously.**

- **Watch for plugged Nozzles. Replace all worn Nozzles or those producing streaky or uneven patterns.**

4. Stop the spray flow **before** stopping the vehicle.

AFTER SPRAYING:

It is extremely important to carefully wash and rinse the System after **every** use. This includes the Tank, Pump, Hoses, Nozzles, Strainer Screen, and also the exterior of the Spray Vehicle.

Flush Pump After Use:

One of the most common causes for faulty pump performance is "gumming" or corrosion inside the pump. Flush the pump and entire system with a Tank cleaning agent. Mix according to the manufacturer's directions. This will dissolve most residue remaining in the pump, leaving the inside fo the pump clean for the next use.

The addition of a detergent cleaner may be advisable in the initial washing. Directions for such an addition, if required, are included on the chemical container.

Cleaning of Sprayer should be accomplished in an area where there is no potential for the chemicals to be washed off in surface water or to enter subsurface drainage systems.

When Sprayer is not to be used for an extended period, refer to the **STORAGE** section on page 15 for the detailed instructions to prevent damage to the components.

PREVENTIVE MAINTENANCE

Preventative maintenance is most important to assure long life of the Pro-Control ™ Spray System. The following maintenance procedures should be followed on a regular basis.

Flush the entire spraying system as described above after each use. Failure to clean the system can result in a chemical residue which can plug the Flow Meter, Solenoids, Hoses and/or Nozzle Tips, and seriously damage the Centrifugal Pump.

Wash spray nozzles throughly with water. Using compressed air, blow out orifice, clean and dry. If orifice remains clogged, clean it with a soft bristled brush. Never use a metal object.

Check all of the nozzles frequently to spot any inconsistencies in the spray pattern. Worn nozzle orifices which allow a greater volume of spray material to flow through the nozzle can cause an expensive loss in chemical and/or turf damage.

SUCTION STRAINER:

Turn off Suction Line Valve if Tank is full of spray solution. Remove the Strainer bowl and clean the Strainer Screen daily when spraying wettable powders - after every 50 hours when using liquid chemical.

IMPORTANT: DO NOT OPERATE THE PUMP DRY! BE CERTAIN SUCTION LINE VALVE IS OPENED WHEN SPRAYING IS RESUMED. DAMAGE TO SPRAY PUMP WILL RESULT WHEN OPERATING THE SPRAYER WITH VALVE CLOSED.

CONTROL CONSOLE:

Always cover or otherwise protect the Control Console from moisture to prevent damage to the electronic system.

MAINTENANCE

PROCEDURE TO TEST THE FLOW METER CABLE:

Disconnect the Console Control Cable from the Flow Meter Cable. Hold the Cable connector so that the key way is pointing in the 12 o'clock position. See FIG. 2.

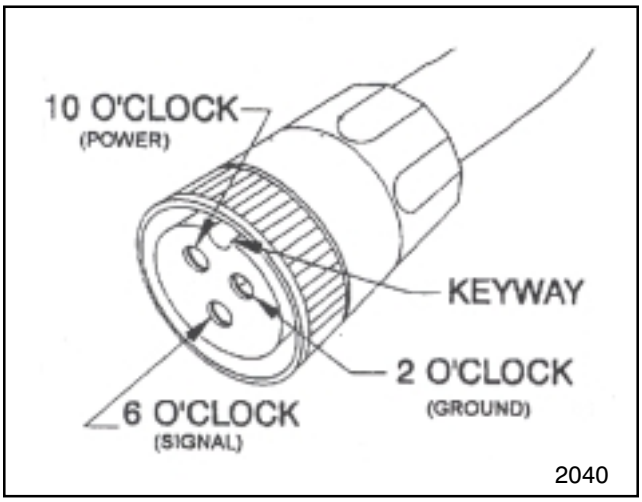

FIG. 2

VOLTAGE READINGS

2 o'clock to 6 o'clock (+5 VDC)
2 o'clock to 10 o'clock (+5 VDC)

1. Enter a METER CAL number of one (1) in key labeled: METER CAL 5

2. Depress key labeled: TOTAL VOLUME

3. Place MASTER and BOOM switches ON.

4. With small jumper wire (or paper clip), short between 2 o'clock and 6 o'clock sockets with a "short - no short" motion. Each time a contact is made, the TOTAL VOLUME total should increment up 1 or more counts.

5. If TOTAL VOLUME does not count up, replace defective cable.

6. Perform above voltage checks.

7. If cables all test good, replace Flow Sensor.

NOTE: After testing is complete, re-enter correct METER CAL number before spraying.

FLOW METER MAINTENANCE AND ADJUSTMENT PROCEDURES:

Once per season the Flow Meter should be flushed and cleaned. Perform this procedure more often if suspensin type products are being sprayed.

1. Thoroughly rinse and drain the entire spraying system.

2. Remove Flow Meter from Sprayer and flush with clean water to remove any chemicals.

3. Remove flange bolts from the Flow Meter. See FIG. 3.

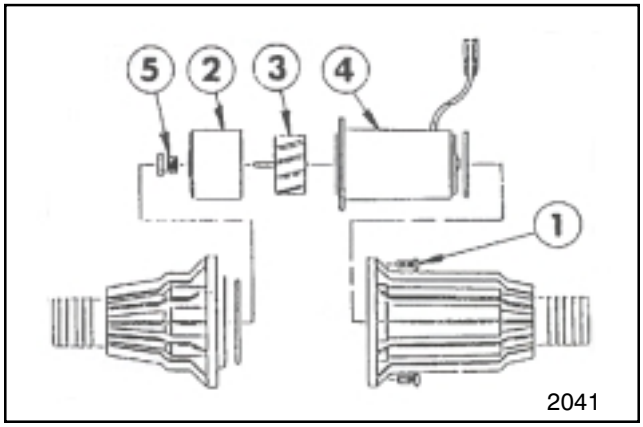

FIG. 3

1. **Flange Bolt**
2. **Turbine Hub**
3. **Turbine**
4. **Transducer**
5. **Turbine Stud**

4. Remove the turbine hub and turbine from inside Flow Meter.

5. Clean turbine and turbine hub of metal filings and any other foreign material, such as wettable powders. Confirm that turbine blades are not worn. Hold turbine in your hand and spin turbine. It should spin freely with very little drag.

6. If transducer assembly is replaced or if turbine stud is adjusted or replaced, verify the turbine stud fit before reassembling. Hold turbine hub with turbine on transducer. Spin turbine by blowing on it. Tighten turbine stud until turbine stalls. Loosen turbine stud 1/3 turn; the turbine should spin freely.

7. Reassemble Flow Meter

8. Using a low pressure 5 PSI (50kPa) jet of air, verify that the turbine spins freely. If there is a drag, loosen the hex stud on the bottom of the turbine hub by 1/16 turn, until the turbine spins freely.

9. If Turbine spins freely and if cables have hecked out. but Flow Meter is not totalizing properly, replace Flow Meter Transducer.

MAINTENANCE

PROCEDURE TO RE-CALIBRATE FLOW METER

1. Enter the specific METER CAL number, listed on the Flow Meter, in the key labeled METER CAL S

2. Enter a TOTAL VOLUME of **0** in the key labeled TOTAL VOLUME .

3. Fill applicator tank with a predetermined amount of measured liquid (i.e. 100 gallons).

NOTE: For best results, measure fluid using an independent method. For greater accuracy it is recommended that the predetermined amount of measured liquid should fill the applicator tank to its fullest level.

4. Empty applicator tank by boom spraying under normal operating conditions (it is not necessary to set vehicle in motion). Once the predetermined amount of measured liquid has been emptied from the applicator tank, check the TOTAL VOLUME number. This number should equal the predetermined amount of measured liquid. If the number displayed under TOTAL VOLUME is different from the predetermined amount of measured liquid, than recalculate the METER CAL using the formula below. Under normal circumstances, the correct METER CAL should be within +/- 3% of the METER CAL number stamped on the tag of the Flow Meter.

EXAMPLE: METER CAL = 720
TOTAL VOLUME = 103
Predetermined amount of measured liquid = 100

$$\text{Corrected METER CAL} = \frac{\text{METER CAL X TOTAL VOLUME}}{\text{Predetermined amount of measured liquid}}$$

$$= \frac{720 \times 103}{100} = 742$$

Corrected METER CAL = 742 - Enter this as the new METER CAL number.

NOTE: Repeat this calibration procedure several times to confirm accuracy. (Always "zero out" the TOTAL VOLUME display before retesting).

NOTE: If the Pro-Control™ Console should malfunction or need repairs, spraying CAN BE RESUMED in manual mode by unplugging the cables from the rear of the Computer Console and re-installing the plastic caps over the cables. The unit can be controlled using the Center Console Controls. THESE CAPS MUST BE RE-INSTALLED IN ORDER FOR THE MANUAL CONTROLS TO OPERATE.

STORAGE

SPRAYING SYSTEM

1. Flush pump and entire spraying system with water and tank cleaning agent. Drain pump and spray system completely.

2. Add a rust inhibiting antifreeze solution to the pump and recirculate through the system, coating the pump interior. Drain solution completely.

3. Remove Flow Meter at the end of each spraying season. Clean Flow Meter turbine and inlet hub. Clean off all metal fillings and wettable powders which have hardened on the plastic and metal parts. Check the inlet hub and turbine assembly for worn or damaged turbine blades and bearings. Flush Flow Meter with clear water and drain. **FREEZING TEMPERATURES MAY DAMAGE FLOW METER IF WATER IS NOT DRAINED.**

4. Remove console from Sprayer Vehicle when not in use for extended periods of time.

5. Remove coil assemblies from solenoid valves. Apply a light film of petroleum jelly or equivalent to the armatures. Reinstall coil assemblies on solenoid valves.

6. Check condition of spray hoses. Tighten all hose connections securely.

7. Lubricate boom pivot grease fittings and pivot points.

IMPORTANT! WHEN A HIGH PRESSURE WASHER OR GARDEN HOSE IS USED FOR CLEANING, IT IS NECESSARY TO COVER AND PROTECT THE CONTROL CONSOLE. WATER ENTERING THE CONTROL CONSOLE WILL CAUSE SEROUS DAMAGE TO THE ELECTRONICS.

Remove the Control Console from the vehicle for storage, or otherwise protect it from the elements. If repairs are ever needed or assistance is required, contact an Authorized TORO Distirbutor.

SERVICING AFTER STORAGE: Flush the entire Spraying System with clean water and detergent. Rinse and drain the entire Spraying System.

STORAGE AND DISPOSAL OF CHEMICALS: Follow Chemical Manufacturer's recommendations for storage and disposal of chemicals.

NOTES:

MAINTENANCE
TROUBLESHOOTING GUIDE

NO.	PROBLEM	CORRECTIVE ACTION
1	NO DISPLAY LIGHTS WITH POWER ON	1. Check fuse on back of Console. 2. Check battery connections. 3. Check operation of POWER ON/OFF switch. 4. Return Console to Raven, Inc. to replace Processor Board Assembly.
2	ALL KEYBOARD LIGHTS ON AT SAME TIME	1. Return Console to Raven, Inc. to replace Face Plate Sub-assembly.
3	A DIGIT CANNOT BE ENTERED VIA KEYBOARD	1. Return Console to Raven, Inc to replace Face Plate Sub-assembly.
4	AN INDICATOR ON A KEY WILL NOT ILLUMINATE	1. Return Console to Raven, Inc. to replace Face Plate Sub-assembly and/or Processor Board Assembly.
5	CONSOLE DISPLAYS FLASHING "CAL" WHEN-EVER VEHICLE ENGINE IS STARTED	1. Check battery voltage and battery connections.
6	CONSOLE DISPLAYS FLASHING "CAL" WHEN-EVER MASTER SWITCH IS TURNED ON OR OFF	1. Check battery voltage and battery connections.
7	CONSOLE DISPLAYS "CAL" WHENEVER SPEED IS CHANGED	1. Check battery voltage and battery connections.
8	"TIME" FUNCTION IS INACCURATE OR DRIFTING	1. Return Console to Raven, Inc. to replace Processor Board Assembly.
9	ONE DISPLAY DIGIT HAS ONE OR MORE MISSING SEGMENTS	1. Return Console to Raven, Inc. to replace LCD Display Board Assembly.
10	SPEED DISPLAY '0'	1. Check Speed Sensor cable connector and plug on back of Console for loose pins. 2. Clean pins and sockets on Speed Sensor cable connectors. 3. Replace Speed Sensor Switch Assembly.
11	SPEED INACCURATE OR UNSTABLE	1. Verify "SP3" setting. 2. Verify correct SPEED CAL number.
12	RATE READS "0000"	1. Verify Speed is registering accurately. If SPEED is zero, refer to Troubleshooting Problem 11. 2. Verify TOTAL VOLUME is registering flow. If not, refer to Troubleshooting Problem 16.

MAINTENANCE
TROUBLESHOOTING GUIDE (CONT'D)

13	RATE INACCURATE OR UNSTABLE	1. Verify that all numbers "keyed" in Console are correct. Verify SPEED is registering accurately. If SPEED is inaccurate, refer to Troubleshooting Problem 11. 2. In MAN (Manual) operation, verify that RATE display (GPA) holds constant when SPEED is held constant. If not, refer to Trouble-shooting Problem 17. 3. In MAN (Manual) operation, check low end and high end pressure range. If pressure cannot be adjusted manually, refer to Troubleshooting Problem 14. 4. If problem persists, return Console to Raven, Inc. to replace Processor Board Assembly
14	CANNOT VARY RATE IN MANUAL OPERATION OR IN AUTO	1. Check cabling to hydraulic Control Valve for breaks. 2. Check connections in cabline for cleanliness 3. Verify that there is voltage at the valve connector by placing MASTER switch ON' RATE 1/RATE 2/MAN switch to MAN; and Power switch to ON. Manually operate INCR/ DECR switch to verify voltage. 4. Verify that valve is turning. If not, replace hydraulic Control Valve motor assembly.
15	SPRAYER PRESSURE IS CORRECT BUT RATE IS LOW	1. Verify that nozzle check valves are not plugged. 2. Verify that pressure at each bottom is the same. 3. Verify all nozzles are of proper and same orifice size.
16	TOTAL VOLUME DOES NOT REGISTER	1. Check Flow Meter Cable for breaks and shorts. See page 14 for test procedure. 2. Check internals of Flow Meter; Clean and adjust. See pages 14 and 15. 3. Replace Flow Meter Transducer.
17	TOTAL VOLUME REGISTERS FLOW INACCURATELY	1. Verify that arrow on Flow Meter is pointing in direction of flow. 2. See pages 14 and 15.
18	BOOM SOLENOID(S) WILL NOT OPERATE	1. Check cable for wires with breaks. 2. Check connectors for cleanliness. 3. Check BOOM switch and MASTER switch for operation. 4. Service Boom Solenoid Valve

MAINTENANCE
TROUBLESHOOTING GUIDE (CONT'D)

PUMP SEAL TROUBLESHOOTING

TROUBLE	PROBABLY CAUSE	REMEDY
1. Cracked or broken stationary seat (Ceramic)	Seal ran dry and heated up. When liquid reached seal faces it was cooler, causing thermal cracks.	Check to insure seal chamber is full of liquid before starting pump. On high temperature application insure proper flushing at seal faces.
2. Carbon Washer scored or grooved.	Dirty System.	Have system cleaned and flushed.
3. Carbon washer worn unevenly	Seal improperly installed.	Check installation instructions for proper assembly.
4. Rubber bellows of seal are hard and brittle. Rapid carbon wear.	Pump ran dry or cavitated.	Check to insure seal chamber is full of liquid before starting pump.
5. Retainer drive tabs badly worn or broken.	Periodic loss of lubrication at seal faces.	Insure proper flushing at seal faces.
6. Flexible bellows broken.	Seal improperly installed.	Check installation instructions for proper assembly.

The Toro General Commercial Products Warranty

A Two-Year Limited Warranty

Conditions and Products Covered

The Toro Company and its affiliate, Toro Warranty Company, pursuant to an agreement between them, jointly warrant your 1996 or newer Toro Commercial Product ("Product") purchased after January 1, 1997, to be free from defects in materials or workmanship for two years or 1500 operational hours*, whichever occurs first. Where a warrantable condition exists, we will repair the Product at no cost to you including diagnosis, labor, parts, and transportation. This warranty begins on the date the Product is delivered to the original retail purchaser.

* Product equipped with hour meter

Instructions for Obtaining Warranty Service

You are responsible for notifying the Commercial Products Distributor or Authorized Commercial Products Dealer from whom you purchased the Product as soon as you believe a warrantable condition exists.

Toro Commercial Products Service Department
Toro Warranty Company
8111 Lyndale Avenue South
Bloomington, MN 55420-1196
612-888-8801
800-982-2740
E-mail: commercial.service@toro.com

Owner Responsibilities

As the Product owner, you are responsible for required maintenance and adjustments stated in your operator's manual. Failure to perform required maintenance and adjustments can be grounds for disallowing a warranty claim

Items and Conditions Not Covered

Not all product failures or malfunctions that occur during the warranty period are defects in materials or workmanship. This express warranty does not cover:

• Product failures which result from the use of non-Toro replacement parts, or from installation and use of add-on, modified, or unapproved accessories.

• Product failures which result from failure to perform required maintenance and/or adjustments.

• Product failures which result from operating the Product in an abusive, negligent or reckless manner.

• Parts subject to consumption through use unless found to be defective. Examples of parts which are consumer, or used up, during normal Product operation include, but are not limited to, blades, reels, bedknives, tines, spark plugs, castor wheels, tires, filters, belts, etc.

• Failures caused by outside influence, items considered to be outside influence include, but are not limited to, weather storage practices, contamination, use of unapproved coolants, lubricants, additives, or chemicals, etc.

• Normal "wear and tear" items. Normal "wear and tear" includes, but is not limited to, damage to seats due to wear or abrasion, worn painted surfaces, scratched decals or windows, etc.

Parts

Parts scheduled for replacement as required maintenance are warranted for the period of time up to the scheduled replacement time for that part.

Parts replaced under this warranty become the property of Toro. Toro will make the final decision whether to repair any existing part or assembly or replace it. Toro may use factory remanufactured parts rather than new parts for some warranty repairs.

General Conditions

Repair by an Authorized Toro Distributor or Dealer is your sole remedy under this warranty.

Neither The Toro Company nor Toro Warranty Company is liable for indirect, incidental or consequential damages in connection with the use of the Toro Products covered by this warranty, including any cost or expense of providing substitute equipment or service during reasonable periods of malfunction or non-use pending completion of repairs under this warranty. Except for the Emissions warranty referenced below, if applicable, there is no other express warranty. All implied warranties of merchantability and fitness for use are limited to the duration of this express warranty.

Some states do not allow exclusions of incidental or consequential damages, or limitations on how long an implied warranty lasts, so the above, exclusions and limitations may not apply to you.

This warranty gives you specific legal rights, and you may also have other rights which vary from state to state.

Note regarding engine warranty: The Emissions Control System on your Product may be covered by a separate warranty meeting requirements established by the U. S. Environmental Protection Agency (EPA) and/or the California Air Resources Board (CARB). The hour limitations set forth above do not apply to the Emissions Control System Warranty. Refer to the Engine Emission Control Warranty Statement printed in your operator's manual or contained in the engine manufacturer's documentation for details.

Countries Other than the United States or Canada

Customers who have purchased Toro products exported from the United States or Canada should contact their Toro Distributor (Dealer) to obtain guarantee policies for your country, province, or state. If for any reason you are dissatisfied with your Distributor's service or have difficulty obtaining guarantee information, contact the Toro importer. If all other remedies fail, you may contact us at Toro Warranty Company.